KYOCERA

CONFIDENTIAL

Published in June 2022
Version 9.0

Service Manual

TASKalfa 4004i / TASKalfa 5004i / TASKalfa 6004i
TASKalfa 7004i
AK-7110 / AK-7120 / BF-730 / BF-9100
DF-7100 / DF-7120 / DF-7140 / DF-7150
DP-7150 / DP-7160 / DP-7170
FAX System 12 / IS-7100 / JS-7110 / MT-730(B)
PF-7120 / PF-7140 / PF-7150
PH-7100 / PH-7110 / PH-7120 / PH-7130
PH-7A / PH-7B / PH-7C / PH-7D
Printing System 17 / ZF-7100



CONFIDENTIAL

FOR AUTHORIZED KYOCERA ENGINEERS ONLY. DO NOT DISTRIBUTE TO NON-AUTHORIZED PARTIES.

CAUTION

RISK OF EXPLOSION IF BATTERY IS REPLACED BY AN INCORRECT TYPE. DISPOSE OF USED BATTERIES ACCORDING TO THE INSTRUCTIONS.

It may be illegal to dispose of this battery into the municipal waste stream. Check with your local solid waste officials for details in your area for proper disposal.

ATTENTION

IL Y A UN RISQUE D'EXPLOSION SI LA BATTERIE EST REMPLACEE PAR UN MODELE DE TYPE INCORRECT. METTRE AU REBUT LES BATTERIES UTILISEES SELON LES INSTRUCTIONS DONNEES.

Il peut être illégal de jeter les batteries dans des eaux d'égout municipales. Vérifiez avec les fonctionnaires municipaux de votre région pour les détails concernant des déchets solides et une mise au rebut appropriée.

Notation of products in the manual

For the purpose of this service manual, products are identified by print speed at A4.

Product name	Print speed	100 V	120 V	220-240 V	Australia
TASKalfa 7004i	70 sheet/min.	x	x	x	x
TASKalfa 6004i	60 sheet/min.	x	x	x	x
TASKalfa 5004i	50 sheet/min.	x	x	x	x
TASKalfa 4004i	40 sheet/min.	x	x	x	x

Revision history

Revision	Date	Pages	Revised contents
1.0	2021/05/10		First edition release
2.0	2021/05/26		Correction: Troubleshooting
3.0	2021/06/07	6-119Page	Correction: Contents of U120 (Delete settings / Clear)
		6-123Page	Correction: Description contents of the U128, the initial value
	2021/06/18	4-258Page	Correction: Detaching and reattaching the DF staple unit
	2021/06/30	7-211Page	Addition: JA000 to JA910
		7-221Page	Addition: JB000 to JB990
		7-339Page	Addition: C8E00 to C8F20
		20-1Page	Deleted: Video PWB
4.0	2021/07/02	4-33Page	Correction: Parts number of cassette heater
	2021/07/06	8-2Page	Correction: Main PWB Contents of the connector list
		8-47Page	Correction: Operation panel main PWB Contents of the connector list
		8-75Page	Correction: DP relay PWB (for DP-7160/DP-7170) Contents of the connector list
	2021/07/12	4-6Page	Correction: IB-37 / IB-38 installation procedure
		6-250Page	Addition: Add the note for U410 (when C102 occurs)
	2021/07/15	6-226Page	Correction: U287 (Delete the note)
	2021/08/17	1-3Page	Correction: Corrected the power source information
		3-22Page	Addition: Add LK-6510 Part number (302XF9303_) (12: APC PWB, 13: PD PWB)
	2021/08/18	3-22Page	Addition: Add (PARTS TONER HOPPER MONO UNIT SP) Part number (302XF9407_)
5.0	2021/09/06	9-260Page	Replaced with the latest version of JS-7110
		9-384Page	Addition: PH-7100
6.0	2021/11/10	7-442Page	Updating the other troubleshooting issue (Including deletion)
		6-280Page	Correction: U469 (Purpose section: drum unit --> primary transfer unit
	2021/12/01	1-15Page	Correction: ZF-7100 (Saddle stitch --> Engineering Fold)
	2021/12/09	6-288Page	Correction: U600 (Country code information)
7.0	2022/2/07	7-355Page	Addition: F040 (Add the parts to be checked and replaced)
8.0	2022/04/06	7-290Page	Correction: Change time for the fuser timeout (C6610: Fuser pressure release sensor error: The fuser pressure release sensor does not turn on even after 6s passed..... --> 10s passed.....)
9.0	2022/5/30	7-390Page	Addition: F060 (Communication failure of the non-volatile memory)
	2022/6/02	7-495Page	Addition: Add item (Countermeasures for the original detection failure)
		4-333Page	Correction: Main unit (Correct part name and part number: Appearance/ cover: SHEET DUCT PU H --> SHEET DUCT PU, 302ND04B80 --> 302ND0444_)
		4-333Page	Correction: Main unit (Correct part number: Appearance/cover: FILTER COVER RIGHT (302ND33300 --> 302V83301_))

Revision	Date	Pages	Revised contents
9.0	2022/6/02	4-334Page	Correction: Paper feed/convey (Delete PLATE CONVEYING TC)
	2022/6/08	4-333Page	Correction: Main unit (Set up: No. of filter 2 --> 1 in MK-kit)
		4-333Page	Correction: Main unit (Set up: Delete “RE” at Call in MK-kit)
		4-334Page	Correction: Paper feed/convey section (Part name: PARTS PRIMARY FEED ASSY SP --> PARTS PULLEY FEED P ASSY SP, Part number: 302ND94210_ --> 302N49431_)
		4-335Page	Correction: Part number (PARTS MOUNT LED ASSY SP: 302ND9312_ --> 302XC9303_)
		4-335Page	Correction: Part number (Scanning section) (SENSOR OPT.: 7NXPS181EL1MH01_ --> 302P79401_)
		4-335Page	Correction: Part number (Scanning section) (PARTS ISU: 302VD9311_ --> 302XC9304_)
		4-337Page	Correction: Part number (DP feed section) (SENSOR OPT.: 7NXPS133GD1+H01 --> 302P79401_)
		4-337Page	Correction: Parts name and parts number (DP convey/switch back section)
		4-343Page	Correction: Parts name and parts number (PF-7120: PF feed/convey section) (CLUTCH 50 Z35R --> PARTS CLUTCH 50 Z35R SP, 302KV4404_ --> 302KV9452_)
		4-345Page	Correction: Parts name and parts number (DF-7100: DF convey/exit section)
		4-346Page	Correction: Parts name and parts number (DF-7100: Sensors)
		4-347Page	Correction: Parts name and parts number (PH-7100/7120/7130: Sensors)
		4-348Page	Correction: Parts name and parts number (DF-7140: DF convey/exit section)
		4-349Page	Correction: Parts name and parts number (DF-7140: DF Sensors)
		4-350Page	Correction: Parts name and parts number (DF-7120: DF convey/exit section)
		4-350Page	Correction: Parts name and parts number (DF-7120: DF Sensors)
		4-355Page	Correction: Parts number (PH-7: PH convey/exit section
		4-356Page	Correction: Parts name and parts number (DF-7150: DF convey/exit section)
		4-357Page	Correction: Parts name and parts number (DF-7150: DF Sensors)
		4-358Page	Correction: Parts name and parts number (BF-9100: DF convey/exit section)
		4-359Page	Correction: Parts name and parts number (BF-9100: BF center fold section)
		4-359Page	Correction: Parts name and parts number (BF-9100: BF Sensors)
	2022/6/08	4-154Page	Correction: Delete the execution of maintenance mode U021

Safety precautions

This booklet provides safety warnings and precautions for our service personnel to ensure the safety of their customers, their machines as well as themselves during maintenance activities. Service personnel are advised to read this booklet carefully to familiarize themselves with the warnings and precautions described here before engaging in maintenance activities.

Safety warnings and precautions

Various symbols are used to protect our service personnel and customers from physical danger and to prevent damage to their property. These symbols are described below:

⚠DANGER:	High risk of serious bodily injury or death may result from insufficient attention to or incorrect compliance with warning messages using this symbol.
⚠WARNING:	Serious bodily injury or death may result from insufficient attention to or incorrect compliance with warning messages using this symbol.
⚠CAUTION:	Bodily injury or damage to property may result from insufficient attention to or incorrect compliance with warning messages using this symbol.

Symbols

The triangle (△) symbol indicates a warning including danger and caution. The specific point of attention is shown inside the symbol.

 General warning.  Warning of risk of electric shock.  Warning of high temperature.

⃠ indicates a prohibited action. The specific prohibition is shown inside the symbol.

 General prohibited action.  Disassembly prohibited.

● indicates that action is required. The specific action required is shown inside the symbol.

 General action required.  Remove the power plug from the wall outlet.  Always ground the copier.

1. Installation Precautions

⚠WARNING

- Do not use a power supply with a voltage other than that specified. Avoid multiple connections to one outlet: they may cause fire or electric shock. When using an extension cable, always check that it is adequate for the rated current. 
- Connect the ground wire to a suitable grounding point. Not grounding the copier may cause fire or electric shock. Connecting the earth wire to an object not approved for the purpose may cause explosion or electric shock. Never connect the ground cable to any of the following: gas pipes, lightning rods, ground cables for telephone lines and water pipes or faucets not approved by the proper authorities. 

⚠CAUTION

- Do not place the copier on an infirm or angled surface: the copier may tip over, causing injury. 
- Do not install the copier in a humid or dusty place. This may cause fire or electric shock. 
- Do not install the copier near a radiator, heater, other heat source or near flammable material. This may cause fire. 
- Allow sufficient space around the copier to allow the ventilation grills to keep the machine as cool as possible. Insufficient ventilation may cause heat buildup and poor copying performance. 
- Always handle the machine by the correct locations when moving it. 
- Always use anti-toppling and locking devices on copiers so equipped. Failure to do this may cause the copier to move unexpectedly or topple, leading to injury. 

- Avoid inhaling toner or developer excessively. Protect the eyes. If toner or developer is accidentally ingested, drink a lot of water to dilute it in the stomach and obtain medical attention immediately.
  If it gets into the eyes, rinse immediately with copious amounts of water and obtain medical attention.



- Advice customers that they must always follow the safety warnings and precautions in the copier's instruction handbook.



2. Precautions for Maintenance

⚠WARNING

- Always remove the power plug from the wall outlet before starting machine disassembly.



- Always follow the procedures for maintenance described in the service manual and other related brochures.



- Under no circumstances attempt to bypass or disable safety features including safety mechanisms and protective circuits.



- Always use parts having the correct specifications.



- Always use the thermostat or thermal fuse specified in the service manual or other related brochure when replacing them. Using a piece of wire, for example, could lead to fire or other serious accident.



- When the service manual or other serious brochure specifies a distance or gap for installation of a part, always use the correct scale and measure carefully.



- Always check that the copier is correctly connected to an outlet with a ground connection.



- Check that the power cable covering is free of damage. Check that the power plug is dust-free. If it is dirty, clean it to remove the risk of fire or electric shock.



- Never attempt to disassemble the optical unit in machines using lasers. Leaking laser light may damage eyesight.



- Handle the charger sections with care. They are charged to high potentials and may cause electric shock if handled improperly.



⚠CAUTION

- Wear safe clothing. If wearing loose clothing or accessories such as ties, make sure they are safely secured so they will not be caught in rotating sections.



- Use utmost caution when working on a powered machine. Keep away from chains and belts.



- Handle the fixing section with care to avoid burns as it can be extremely hot.



- Check that the fixing unit thermistor, heat and press rollers are clean. Dirt on them can cause abnormally high temperatures.



- Do not remove the ozone filter, if any, from the copier except for routine replacement.



- Do not pull on the AC power cord or connector wires on high-voltage components when removing them; always hold the plug itself.



- Do not route the power cable where it may be stood on or trapped. If necessary, protect it with a cable cover or other appropriate item.



- Treat the ends of the wire carefully when installing a new charger wire to avoid electric leaks.



- Remove toner completely from electronic components.



- Run wire harnesses carefully so that wires will not be trapped or damaged.



- After maintenance, always check that all the parts, screws, connectors and wires that were removed, have been refitted correctly. Special attention should be paid to any forgotten connector, trapped wire and missing screws.



- Check that all the caution labels that should be present on the machine according to the instruction handbook are clean and not peeling. Replace with new ones if necessary.



- Handle greases and solvents with care by following the instructions below:
  - Use only a small amount of solvent at a time, being careful not to spill. Wipe spills off completely.
  - Ventilate the room well while using grease or solvents.
  - Allow applied solvents to evaporate completely before refitting the covers or turning the power switch on.
  - Always wash hands afterwards.



- Never dispose of toner or toner bottles in fire. Toner may cause sparks when exposed directly to fire in a furnace, etc.



- Should smoke be seen coming from the copier, remove the power plug from the wall outlet immediately.



3. Miscellaneous

⚠WARNING

- Never attempt to heat the drum or expose it to any organic solvents such as alcohol, other than the specified refiner; it may generate toxic gas.



- Keep the machine away from flammable liquids, gases, and aerosols. A fire or an electric shock might occur.



Contents

1 Specification 1-1

1 - 1 Specifications 1-1
(1) Common function 1-1
(2) Copy Functions 1-4
(2-1)Copy speed 1-4
(2-2)First Copy Time(A4, place on the platen, feed from Cassette) 1-5
(2-3)Zoom Level 1-5
(2-4)Resolution 1-5
(2-5)Others 1-5
(3) Printer Functions 1-6
(3-1)Print speed 1-6
(3-2)First print time (A4/LTR) 1-6
(3-3)Resolution 1-6
(3-4)Others 1-6
(4) Scanner Functions 1-7
(4-1)Scan speed (A4/LTR 300dpi/600dpi, [Text+Photo] mode) 1-7
(4-2)Others 1-7
(5) Optional items 1-8
(5-1)Document Processor (DP-7150/DP-7160/DP-7170) 1-8
(5-2)500 sheetsx2 Paper feeder cross-section view (PF-7140) 1-8
(5-3)1,500 sheetx2 Large capacity feeder (PF-7150) 1-9
(5-4)3000 sheetx1 Side feeder (PF-7120) 1-9
(5-5)Inner Finisher (DF-7100) 1-9
(5-6)Punch Unit (For Inner Finisher) (PH-7100/7120/7130) 1-10
(5-7)1000-sheet Finisher (DF-7120) 1-10
(5-8)4000-sheet Finisher (DF-7140) 1-11
(5-9)100 sheet staple finisher (DF-7150) 1-12
(5-10)Punch Unit (For 1,000-Sheets/4,000-Sheets/100-Staple Finisher) (PH-7A/C/D) 1-12
(5-11)Mailbox (For 4,000-Sheet Finisher (DF-7110) Optional) (MT-730 (B)) 1-12
(5-12)Folding Unit (For 4,000-Sheet Finisher) (BF-730) 1-13
(5-13)Folding Unit (For 100-Sheet Staple finisher optional) (BF-9100) 1-14
(5-14)Job Separator Tray (JS-7100) 1-14
(5-15)Banner Tray (Banner Guide 10) 1-15
(5-16)Z folding unit (ZF-7100) 1-15
(5-17)Inserter unit (IS-7100) 1-16
(5-18)Inner shift tray (JS-7110) 1-16
(5-19)Speed license 1-16
(5-20)FAX System (FAX System 12) 1-17
1 - 2 Part Names 1-19
(1) Main unit appearance 1-19
(2) Connectors/Interior 1-21
(3) Optional Equipments Attached 1-22
(4) FAX System 1-23
(5) Operation Panel Keys 1-24
1 - 3 Enhance Configuration 1-27
(1) DP-7170 "Document Processor (Dual Scan with Skewed, Multifeed and Staple Detection)"/ DP-7160 "Document Processor (Dual Scan)"/DP-7150 "Document Processor (Reverse Automatic)"/ PLATEN COVER TYPE E "Original Cover" 1-29
(2) MT-730 (B) "Mailbox" 1-29
(3) DF-7140 "4,000-sheet Finisher" 1-29
(4) DF-7150 "100-sheet Staple Finisher" 1-29
(5) DF-7120 "1,000-sheet Finisher" 1-29
(6) BF-730 "Folding Unit" 1-29
(7) BF-9100 "Folding Unit" 1-29
(8) ZF-7100 "Z-Fold Unit" (Option for 60ppm/70ppm model) 1-29
(9) IS-7100 "Inserter" (Option for 60ppm/70ppm model) 1-29
(10) PF-7140 "Paper Feeder (500-sheet×2)" 1-29
(11) PF-7150 "Large Capacity Feeder (1,500-sheet×2)" 1-29
(12) PF-7120 "Side Feeder (3,000-sheet)" 1-29
(13) Banner Guide 10 "Banner Tray" 1-30

(14) JS-7110 "Inner Shift Tray" 1-30
(15) JS-7100 "Job Separator" 1-30
(16) DF-7100 "Inner Finisher" (Option for 40ppm/50ppm/60ppm model) 1-30
(17) PH-7100, PH-7120, PH-7130 "Punch Unit" 1-30
(18) PH-7A, PH-7C, PH-7D "Punch Unit" 1-30
(19) NK-7120/NK-7130 "Optional Numeric Keypad" 1-30
(20) DT-730 (B) "Document Table" 1-30
(21) Keyboard Holder 10 "Keyboard Holder" 1-30
(22) FAX System 12 "FAX Kit" 1-30
(23) IB-50 "Network Interface Kit" 1-30
(24) IB-51 "Wireless Network Interface Kit" 1-30
(25) IB-37/IB-38 "Wireless Network Interface Kit" 1-31
(26) HD-15/HD-16 "Hard Disk" 1-31
(27) Card Authentication Kit(B) "Card Authentication Kit" 1-31
(28) Internet FAX Kit(A) "Internet FAX Kit" 1-31
(29) UG-33 "ThinPrint Option" 1-31
(30) UG-34 "Emulation Upgrade Kit" 1-31
(31) Scan Extension Kit(A) "OCR Scan Activation Kit" 1-31
(32) Data Security Kit 10 "Data Security Kit" 1-31
(33) USB Keyboard "USB Keyboard" 1-31
(34) Speed license 1-31

2 Installation 2-1

2 - 1 Environment 2-1
2 - 2 Installing the main unit 2-2
(1) Unpacking and checking bundled items 2-3
(2) Notes on main unit transportation 2-4
(3) Release the lock of the scanner mirror frame 2-5
(4) Release lift plate stopper 2-6
(5) Attaching the sub tray 2-7
(6) Connecting the Interface Cable 2-8
(7) Connecting the FAX cable (FAX installation only) 2-10
(8) Loading Paper 2-12
(8-1)Precaution for Loading Paper 2-12
(8-2)Select cassette 2-13
(8-3)Set paper to the cassette 1 2-14
(8-4)Set paper in the cassette 2 2-17
(8-5)Set postcard and envelope in the cassette 2-21
(8-6)Set paper in the large capacity feeder 2-24
(8-7)Set paper in the side feeder 2-26
(9) Connecting the Power Cord 2-28
(10) Turn power on 2-28
(11) Setting the speed license 2-29
(11-1)When upgrading the printing speed 2-29
(11-2)When printing speed is not changed 2-31
(12) Setting up the Toner Container 2-33
(13) Default Setting 2-35
(13-1)Setting Date and Time 2-35
(13-2)Network Setup (LAN Cable Connection) 2-35
(13-3)Paper size and media type setting 2-37
(14) Installing Software 2-37
(15) Set up for high altitude locations. 2-37
(16) Adjusting image 2-38
(16-1)Setting the ID correction operation (Maintenance mode U464) 2-38
(16-2)Color registration adjustment (Maintenance mode U469) 2-38
(16-3)Adjusting the halftone automatically (Maintenance mode U410) 2-39
(16-4)Output Maintenance report (Maintenance mode U000) 2-39
(16-5)Clearing the counts (Maintenance mode U927) 2-39
(16-6)Setting the delivery date (Maintenance mode U278) 2-39

(17) Exiting from the maintenance mode 2-39
(18) Completion of installing the main unit (Turning the power off) 2-40
(19) Motion sensor 2-40
(20) Turn the power on again 2-41
2 - 3 Optional unit installation 2-42
(1) Unpacking and checking bundled items 2-42
(1-1)Paper Feeder (PF-7140) 2-42
(1-2)Large capacity feeder (PF-7150) 2-43
(1-3)Side Paper Feeder (PF-7120) 2-44
(1-4)Document Processor (DP-7150) 2-45
(1-5)Document Processor (DP-7160/DP-7170) 2-46
(1-6)Inner Finisher (DF-7100) 2-47
(1-7)Attachment Kit (AK-7110) 2-48
(1-8)1,000-sheets Finisher (DF-7120) 2-49
(1-9)4,000-sheet Finisher (DF-7140) 2-50
(1-10)Mailbox (MT-730(B)) 2-51
(1-11)Booklet folding Unit (BF-730) 2-52
(1-12)Punch Unit (PH-7A/C/D) 2-53
(1-13)Punch Unit (PH-7100/7120/7130) 2-54
(1-14)100 sheet staple finisher (DF-7150) 2-55
(1-15)Booklet unit (BF-9100) 2-57
(1-16)Inserter (IS-7100) 2-58
(1-17)Attachment kit (AK-7120) 2-60
(1-18)Z-folding unit (ZF-7100) 2-61
(2) Optional unit installation 2-62
2 - 4 Installing the optional equipment 2-63
(1) SD/SDHC memory card 2-63
(2) Hard disk (HD-15): 120 V model is Standard 2-64
(3) Hard disk (HD-16) 2-64
(4) Gigabit Ethernet extension kit (IB-50) 2-67
(5) Wireless LAN interface (IB-51) 2-67
(6) Wireless LAN interface (IB-37/IB-38) 2-68
(7) Document table (DT-730(B)) 2-71
(8) Numeric Keypad (NK-7120): 220 V to 240V model 2-74
(9) Numeric Keypad (NK-7130): 120 V model 2-74
(10) ID card reader 2-77
(11) USB keyboard 2-81
(12) Cassette heater 2-91
(12-1)In the case of main unit cassette 2-91
(12-2)In case of Paper Feeder (PF-7140) 2-93
(12-3)In case of Paper Feeder (PF-7150) 2-95
(13) In case of Side Paper Feeder (PF-7120) 2-97
(14) Coin Vendor (option for 100v model only) 2-101
(15) Banner Tray 2-109
2 - 5 About Optional Applications 2-111

3 Machine Design 3-1

3 - 1 Mechanical Configuration 3-1
3 - 2 Extension device construction (optional) 3-2
(1) Paper feeder cross-section view (PF-7140) 3-2
(2) Large capacity feeder cross-section view (PF-7150) 3-2
(3) Side Deck cross-section view (PF-7120) 3-3
(4) Document processor cross-section view (DP-7150) 3-4
(5) Document processor cross-section view (DP-7160/DP-7170) 3-4
(6) Job separator cross-section view (JS-7100) 3-5
(7) Inner shift tray cross-section view (JS-7110) 3-6
(8) Attachment Kit cross-section view (AK-7110) 3-6
(9) Inner finisher cross-section view (DF-7100) 3-7
(10) 4000-sheet Finisher cross-section view (DF-7140) 3-8

(11) 1000-sheet Finisher cross-section view (DF-7120) 3-9
(12) Mailbox cross-section view (MT-730(B)) 3-10
(13) Folding unit cross-section view (BF-730) 3-11
(14) 100 sheet staple finisher cross-section view (DF-7150) 3-12
(15) Booklet folding unit cross-section view (BF-9100) 3-12
(16) Inserter cross-section view (IS-9100) 3-13
(17) Z-folding unit cross-section view (ZF-9100) 3-14
3 - 3 Electric parts 3-15
(1) Electric parts layout 3-15
(2) Descriptions about the major PWBs 3-16
(2-1)Main PWB 3-16
(2-2)Engine PWB 3-16
(2-3)Main high-voltage PWB 3-17
(2-4)Transfer high-voltage PWB 3-17
(2-5)Power supply PWB 3-18
(2-6)IH PWB 3-18
(2-7)Operation panel main PWB 3-19
(2-8)Fuser high-voltage PWB 3-19
(3) PWBs 3-20
(3-1)Locations 3-20
(3-2)Parts name table (PWB) 3-22
(4) Sensors and Switches 3-24
(4-1)Locations 3-24
(4-2)Part name table (Sensors and Switches) 3-27
(5) Motors 3-29
(5-1)Locations 3-29
(5-2)Part name table (motor) 3-31
(6) Others 3-33
(6-1)Locations 3-33
(6-2)Part name table 3-35
3 - 4 Electric parts (Optional unit) 3-36
(1) Document processor (DP-7150) 3-36
(1-1)Locations 3-36
(1-2)Part name table 3-37
(2) Document processor (DP-7160) 3-38
(2-1)Locations 3-38
(2-2)Part name table 3-39
(3) Document processor (DP-7170) 3-40
(3-1)Locations 3-40
(3-2)Part name table 3-41
(4) Paper Feeder (PF-7140) 3-43
(4-1)Locations 3-43
(4-2)Part name table 3-44
(5) High capacity paper feeder (PF-7150) 3-45
(5-1)Locations 3-45
(5-2)Part name table 3-46
(6) Side Deck (PF-7120) 3-47
(6-1)Locations 3-47
(6-2)Part name table 3-48
(7) Inner Shift tray (JS-7100) 3-49
(7-1)Locations 3-49
(7-2)Part name table 3-49
(8) Inner Finisher (DF-7100) 3-50
(8-1)Locations 3-50
(8-2)Part name table 3-51
(9) Punch unit (PH-7100/7120/7130) 3-53
(9-1)Locations 3-53
(9-2)Part name table 3-53
(10) Attachment Kit (AK-7110) 3-55
(10-1)Locations 3-55

(10-2)Part name table 3-55
(11) 4000-sheet Finisher (DF-7140) 3-56
(11-1)Locations 3-56
(11-2)Part name table 3-58
(12) 1000-sheet Finisher (DF-7120) 3-60
(12-1)Locations 3-60
(12-2)Part name table 3-61
(13) Mailbox (MT-730(B)) 3-63
(13-1)Locations 3-63
(13-2)Part name table 3-63
(14) Punch unit (PH-7) 3-65
(14-1)Locations 3-65
(14-2)Part name table 3-65
(15) Booklet folding unit (BF-730) 3-67
(15-1)Locations 3-67
(15-2)Part name table 3-68
(16) 100 sheet staple finisher (DF-7150) 3-69
(16-1)PWBs 3-69
(16-2)Part name table 3-70
(16-3)Sensors and Switches 3-71
(16-4)Part name table 3-74
(16-5)Motors 3-76
(16-6)Part name table 3-78
(16-7)Solenoid, Clutch 3-79
(16-8)Part name table 3-79
(17) Folding Unit (BF-9100) 3-80
(17-1)Motor, Solenoid, PWB 3-80
(17-2)Part name table 3-81
(17-3)Sensors and Switches 3-82
(17-4)Part name table 3-83
(17-5)Sensor, Fan (BF Bridge) 3-84
(17-6)Part name table 3-84
(18) Inserter (IS-7100) 3-85
(18-1)Sensor,switch 3-85
(18-2)Part name table 3-87
(18-3)PWB,Motor,Fan 3-88
(18-4)Part name table 3-89
(19) Z-folding unit (ZF-7100) 3-90
(19-1)PWB 3-90
(19-2)Part name table 3-90
(19-3)Sensor 3-91
(19-4)Part name table 3-92
(19-5)Switch 3-93
(19-6)Part name table 3-94
(19-7)Motor 3-95
(19-8)Part name table 3-96
(19-9)LED 3-97
(19-10)Part name table 3-98
3 - 5 Driving system 3-99
(1) Drive configuration 3-99
(2) Drive location 3-104
(3) Drive unit appearance 3-105
(3-1)Feed drive unit 3-105
(3-2)Main drive unit 3-105
(3-3)Toner supply drive unit 3-106
(3-4)Fuser drive unit 3-106
3 - 6 Mechanical construction 3-107
(1) Paper feed/Conveying section 3-107
(1-1)Cassette paper feed section 3-107
(1-2)MP tray paper feed section 3-109

(1-3)Paper conveying section 3-111
(2) Optical section 3-113
(2-1)Image scanner section 3-113
(2-2)Laser scanner unit 3-115
(3) Developer section 3-117
(3-1)Developer unit 3-117
(4) Drum section 3-119
(4-1)Charger roller unit 3-119
(4-2)Cleaning 3-119
(5) Transfer/Separation section 3-121
(5-1)Primary transfer unit 3-121
(5-2)Secondary transfer roller unit 3-123
(6) Fuser section 3-125
(6-1)Fuser unit 3-125
(7) Exit and feedshift section 3-127
(7-1)Exit unit 3-127
(7-2)Exit paper jam 3-129
(8) Duplex conveying section 3-130
(8-1)Duplex conveying unit 3-130
3 - 7 Mechanical configuration (Optional) 3-132
(1) Paper feeder (PF-7140) 3-132
(1-1)Cassette paper feed section 3-132
(2) Large capacity feeder (PF-7150) 3-135
(2-1)Cassette 2 3-135
(3) Side Deck (PF-7120) 3-137
(3-1)Cassette paper feed section 3-137
(4) Document processor (DP-7150) 3-139
(4-1)Original paper feed section 3-139
(4-2)Original conveying section and exit/switching section 3-140
(4-3)Duplex (switchback) action 3-142
(5) Document processor (DP-7160) 3-143
(5-1)Original paper feed section 3-143
(5-2)Original conveying section and exit/switching section 3-144
(6) Document processor (DP-7170) 3-146
(6-1)Original paper feed section 3-146
(6-2)Original conveying section and exit/switching section 3-147
(7) Inner Finisher (DF-7100) 3-149
(7-1)Paper conveying section 3-149
(7-2)Bundle exit operation 3-151
(8) 4000-sheet Finisher (DF-7140) 3-153
(8-1)Paper entry/Feedshift/DF tray B exit section 3-153
(8-2)Feedshift operation to the DF tray B or finishing section 3-155
(8-3)Finishing section 3-156
(8-4)Relief drum operation 3-159
(8-5)Bundle exit operation 3-161
(9) 1000-sheet Finisher (DF-7120) 3-163
(9-1)Finishing section 3-163
(9-2)Bundle exit operation 3-165
(10) Mailbox (MT-730(B)) 3-168
(10-1)Output to the mailbox tray 3-170
(11) Punch unit (PH-7) 3-171
(12) Booklet folding unit (BF-730) 3-173
(12-1)Paper folding operation (Center-folding, Tri-folding) 3-175
(12-2)Tri-folding position adjustment for the folding unit 3-178
(13) 100 sheet staple finisher (DF-7150) 3-181
(13-1)Paper entry and feed-shift and DF tray B exit section 3-181
(13-2)Feedshift operation to the DF tray B or finishing section 3-182
(13-3)Finishing section 3-183
(13-4)Relief drum operation 3-187
(13-5)DF exit tray 3-189

(14) Booklet Unit (BF-9100) 3-191
(15) Inserter(IS-7100) 3-194
(15-1)IS paper feeding section 3-194
(15-2)IS conveying section and IS confluence section 3-196
(16) Z-folding unit (ZF-7100) 3-199
(16-1)Roller layout 3-199
(16-2)Conveying layout 3-200

4 Maintenance 4-1

4 - 1 Precautions for the maintenance 4-1
(1) Precautions 4-1
(2) Storage and handling of the drum 4-1
(3) Storage of the toner container 4-1
4 - 2 Maintenance parts 4-2
(1) Maintenance kits 4-2
(2) Executing the maintenance mode after replacing the maintenance kit 4-3
(2-1)Maintenance modes that need to run after replacing the above maintenance kit. 4-3
(2-2)Items that perform after replacing the unit 4-3
4 - 3 Maintenance parts replacement procedures 4-6
(1) Cassette paper feed section 4-6
(1-1)Detaching and attaching the pickup pulley and paper feed roller 4-6
(1-2)Detaching and attaching the regist cleaner 4-10
(2) MP paper feed section 4-13
(2-1)Detaching and attaching the MP paper feed roller 4-13
(2-2)Detaching and attaching the MP retard roller 4-15
(3) Transfer section 4-16
(3-1)Detaching and attaching the primary transfer unit 4-16
(3-2)Detaching and attaching the secondly transfer unit 4-19
(3-3)Detaching and attaching the secondary transfer roller unit 4-20
(4) Drum section 4-21
(4-1)Detaching and attaching the drum unit 4-21
(4-2)Detaching and attaching the main charge roller unit 4-24
(5) Developer section 4-26
(5-1)Detaching and attaching the developer unit 4-26
(6) Fuser section 4-29
(6-1)Detaching and reattaching the fuser unit 4-29
(6-2)Hight adjustment of fuser unit (Trail edge skew image adjustment) 4-31
(7) Others 4-33
(7-1)Detaching and attaching filters. 4-33
4 - 4 Maintenance parts replacement procedures (Enhancement) 4-34
(1) Paper feeder (PF-7140) 4-34
(1-1)Detaching and attaching PF retard roller, PF pickup pulley and paper feed roller 4-34
(2) Large capacity feeder (PF-7150) 4-38
(2-1)Detaching and attaching PF retard roller, PF pickup pulley and paper feed roller 4-38
(3) Side Deck (PF-7120) 4-42
(3-1)Detaching and attaching the pickup pulley and paper feed roller 4-42
(3-2)Detaching and attaching the PF retard roller 4-44
(4) Document processor (DP-7150) 4-45
(4-1)Detaching and attaching the DP pickup pulley and DP paper feed roller 4-45
(4-2)Detaching and attaching the DP retard roller 4-46
(5) Document processor (DP-7160) 4-47
(5-1)Detaching and attaching the DP pickup pulley and DP paper feed roller 4-47
(5-2)Detaching and attaching the DP retard roller 4-48
4 - 5 Adjustment procedures after replacing the maintenance kit 4-49
4 - 6 Disassembly and assembly procedures 4-50
(1) OUTER COVERS 4-50
(1-1)Detaching and attaching the front cover 4-50
(1-2)Detaching and reattaching the front cover for maintenance 4-52
(1-3)Detaching and attaching the inner cover 4-53

(1-4)Detaching and attaching the rear bottom cover 4-55
(1-5)Detaching and attaching the rear bottom cover 4-55
(1-6)Detaching and attaching the DP rear cover 4-55
(1-7)Detaching and attaching the LSU rear cover 4-56
(1-8)Detaching and attaching the left top cover/the rear left cover. 4-56
(1-9)Detaching and attaching the right top cover 4-59
(1-10)Detaching and attaching the rear right top cover, rear right bottom cover 4-60
(1-11)Detaching and attaching the right cover assembly 4-61
(2) Optical section 4-67
(2-1)Detaching and attaching the LSU 4-67
(2-2)Detaching and attaching the lens unit 4-79
(2-3)Detaching and attaching the lamp unit 4-83
(2-4)Detaching and attaching the scanner wires 4-86
(3) Drive section 4-94
(3-1)Detaching and attaching the PF drive unit 4-94
(3-2)Detaching and attaching the main drive unit 4-96
(3-3)Detaching and attaching the container motor 4-101
(3-4)Detaching and attaching the toner supply drive unit 4-107
(3-5)Detaching and attaching the fuser drive unit 4-116
(4) Others 4-122
(4-1)Detaching and attaching the SSD 4-122
(4-2)Detaching and attaching the hard disk drive 4-124
(4-3)Detaching and attaching the lift motor 4-126
(4-4)Detaching and attaching the fuser discharge unit 4-128
(4-5)Detaching and attaching the exit unit 4-130
(4-6)Detaching and attaching waste toner box unit 4-132
(4-7)Fan motor attachment direction 4-148
(5) PWBs 4-149
(5-1)Detaching and attaching the engine PWB 4-149
(5-2)Detaching and attaching the main PWB 4-151
(5-3)Detaching and attaching the front drive PWB 4-158
(5-4)Detaching and attaching the main high voltage PWB 4-161
(5-5)Detaching and reattaching the transfer high voltage PWB 4-164
(5-6)Detaching and attaching the Power supply PWB 4-171
(5-7)Detaching and attaching the IH PWB 4-175
(5-8)Detaching and attaching the operation panel PWB 4-182
(6) Sensor adjustment 4-188
(6-1)Attach MP paper width sensor 4-188
4 - 7 Disassembly and assembly (Enhancement) 4-190
(1) Paper feeder (PF-7140) 4-190
(1-1)Detaching and attaching the PF drive unit 4-190
(1-2)Detaching and attaching the PF lift motor 4-191
(1-3)Detaching and attaching the PF PWB 4-193
(2) Large capacity feeder (PF-7150) 4-194
(2-1)Detaching and attaching the PF drive unit 4-194
(2-2)Detaching and attaching the PF lift motor 4-196
(2-3)Detaching and attaching the PF PWB 4-198
(3) Side Deck (PF-7120) 4-200
(3-1)Detaching and attaching the PF drive unit 4-200
(3-2)Detaching and attaching the PF lift motor 4-202
(3-3)Detaching and attaching the PF PWB 4-204
(4) Document processor (DP-7150) 4-206
(4-1)Detaching and attaching the document processor 4-206
(4-2)Detaching and attaching the DP rear cover 4-209
(4-3)Detaching and attaching the DP PWB 4-210
(5) Document processor (DP-7160/DP-7170) 4-213
(5-1)Detaching and attaching the document processor 4-213
(5-2)Detaching and attaching the DP rear cover 4-217
(5-3)Detaching and attaching the DP PWB 4-218
(5-4)Detaching and attaching DPCIS 4-220

(6) Inner Shift tray (JS-7100) 4-224
(6-1)Detaching and attaching the Inner Shift tray unit 4-224
(6-2)Detaching and attaching the JS PWB 4-224
(7) Inner Finisher (DF-7100) 4-227
(7-1)Detaching and attaching the DF PWB 4-227
(7-2)Detaching and attaching the staple unit 4-229
(8) Attachment Kit (AK-7110) 4-236
(8-1)Detaching and attaching BR convey motor 4-236
(8-2)Detaching and attaching the BR PWB 4-238
(9) 1000-sheet Finisher (DF-7120) 4-239
(9-1)Detaching and attaching the DF staple unit 4-239
(9-2)Detaching and attaching the DF PWB 4-242
(10) 4000-sheet Finisher (DF-7140) 4-244
(10-1)Detaching and attaching the DF staple unit 4-244
(10-2)Detaching and attaching the DF PWB 4-246
(11) Booklet folding Unit (BF-730) 4-248
(11-1)Detaching and attaching the BF staple unit 4-248
(11-2)Detaching and attaching the BF PWB 4-249
(12) 100 sheet staple finisher (DF-7150) 4-251
(12-1)Separation of enhancement units 4-251
(12-2)Detaching and attaching the front cover 4-251
(12-3)Detaching and attaching the PWB 4-270
(13) PH PWB (Punch unit) 4-272
(14) Booklet Unit (BF-9100) 4-273
(14-1)Separate from DF and detach unit 4-273
(14-2)Detaching and reattaching the BF staple unit 4-278
(14-3)Detaching and reattaching the BF PWB 4-279
(15) Inserter (IS-7100) 4-281
(15-1)Exterior Covers 4-281
(15-2)PWBs 4-283
(15-3)Motors 4-284
(15-4)paper feed tray unit 4-295
(15-5)IS Upper unit 4-298
(16) Z-folding unit(ZF-7100) 4-301
(16-1)Exterior Covers 4-301
(16-2)Motor 4-313
(16-3)Electrical equipment 4-324
4 - 8 Scheduled maintenance procedure
(CH: Inspection CL: Cleaning AD: Adjustment LU: Lubrication RE: Replacement 4-333
(1) Main unit 4-333
(2) Document processor DP-7150 (Option) 4-337
(3) Document Processor DP-7160/7170 (Option) 4-339
(4) Paper feeder (PF-7140) (Option) 4-341
(5) Paper feeder (PF-7150) (Option) 4-342
(6) Paper feeder (PF-7120) (Option) 4-343
(7) Attachment Kit (AK-7110) (Option) 4-344
(8) Inner Finisher (DF-7100) (Option) 4-345
(9) Punch Unit (PH-7100/7120/7130) (Option) 4-347
(10) 4000-sheet Finisher (DF-7140) 4-348
(11) 1000-sheet Finisher (DF-7120) 4-350
(12) Booklet folding Unit (BF-730) (Option) 4-352
(13) Mailbox (MT-730(B)) (Option) 4-354
(14) Punch Unit (PH-7A/B/C/D) (Option) 4-355
(15) 100 sheet staple finisher (DF-7150) (Optional) 4-356
(16) Booklet Unit (BF-9100) (Optional) 4-358
(17) Inserter (IF-7100) (Optional) 4-360
(18) Z-folding unit (ZF-7100) (Optional) 4-361

5 Firmware 5-1

5 - 1 Firmware update 5-1

6 Maintenance mode 6-1

6 - 1 Maintenance mode 6-1
(1) Execute the maintenance mode 6-1
(2) Maintenance modes list 6-2
(3) Content of the maintenance mode 6-8

7 Troubleshooting 7-1

7 - 1 Image formation problems 7-1
(1) Isolate the place of image failure 7-1
(2) Scanner Factors (When scanning the front side through DP, or scanning the back side through the mechanically reversed DP) 7-2
(2-1)Abnormal image 7-5
(2-2)Colored background 7-6
(2-3)Black or color spots 7-7
(2-4)Blurred characters 7-7
(2-5)Mismatch between the original center line and output image center line (first side) 7-8
(2-6)Mismatch between the original center line and output image center line (second side) 7-8
(2-7)Horizontal black streaks 7-8
(2-8)Vertical streaks, band (black or color) 7-9
(2-9)Regular difference of the leading edge on the original image and output image (Front side) 7-10
(2-10)Regular difference of the leading edge on the original image and output image (Back side) 7-10
(2-11)Vertical streaks, band (white) 7-11
(2-12)Moire (front side) 7-11
(2-13)Moire (back side) 7-11
(2-14)Missing entire image (White / Black) 7-12
(2-15)Image is dark partly or light 7-12
(2-16)Blurred image 7-13
(2-17)Image is missing partly 7-13
(2-18)Color shift 7-14
(2-19)Skewed image 7-14
(2-20)Entire image is light 7-15
(3) Scanner Factors (Dual scan DP: When scanning the back side through DP) 7-16
(3-1)Abnormal image 7-18
(3-2)Colored background 7-18
(3-3)Black or color spots 7-19
(3-4)Mismatch between the center of the original and the center of the copy image 7-19
(3-5)Horizontal black streaks 7-19
(3-6)Vertical streaks, band (black or color) 7-20
(3-7)Regular difference of the leading edge on the original image and copy image 7-20
(3-8)Vertical streaks, band (white) 7-21
(3-9)Moire 7-21
(3-10)Missing entire image (White / Black) 7-22
(3-11)Image is dark partly or light 7-22
(3-12)Blurred image 7-23
(3-13)Image is missing partly 7-23
(3-14)Color shift 7-24
(3-15)Skewed image 7-24
(3-16)Entire image is light 7-25
(4) Scanner Factors (when scanning on the contact glass) 7-26
(4-1)Abnormal image 7-28
(4-2)Colored background 7-28
(4-3)Black or color spots 7-29
(4-4)Blurred characters / Color Shift 7-29
(4-5)Mismatch between the center of the original and the center of the copy image 7-29
(4-6)Horizontal black streaks 7-30

(4-7)Vertical streaks, band (black or color) 7-30
(4-8)Regular difference of the leading edge on the original image and copy image 7-31
(4-9)Vertical streaks, band (white) 7-31
(4-10)Moire 7-32
(4-11)No image comes out (White or Black) 7-32
(4-12)Image is dark partly or light 7-33
(4-13)Blurred image 7-34
(4-14)Image is missing partly 7-35
(4-15)Skewed image 7-35
(4-16)Entire image is light 7-36
(5) Engine Factors (Paper conveying cause: Transfer, Fuser and Separation) 7-37
(5-1)Background image is foggy. 7-40
(5-2)Black dots (toner dirt) 7-40
(5-3)Image is missing partly (blank image, white spots) 7-41
(5-4)Image is missing partly (When feeding from the MP tray) 7-41
(5-5)Blank image 7-41
(5-6)Mismatch between the original center line and output image center line 7-42
(5-7)Dirty reverse side 7-42
(5-8)Entire image is light 7-43
(5-9)Horizontal streaks, band (White, black) 7-43
(5-10)Irregular mismatch of the leading edge between the original and output image (paper leading edge timing variation) 7-45
(5-11)Blurred characters 7-45
(5-12)Offset 7-46
(5-13)Fusing failure 7-48
(5-14)Paper skew at the trailing edge 7-48
(5-15)Uneven transfer 7-49
(5-16)Blurred image 7-50
(5-17)Vertical streaks, band (white) 7-51
(5-18)Vertical streaks and bands (black) 7-51
(5-19)Granular image (Printing the solid image in the monochrome mode) 7-52
(6) Engine Factors (Image forming cause) 7-53
(6-1)Background image is foggy. 7-56
(6-2)Background image is foggy. 7-57
(6-3)Background image is foggy. 7-58
(6-4)Entire image is light 7-59
(6-5)Entire image is light 7-60
(6-6)Entire image is light 7-62
(6-7)Blank image 7-63
(6-8)Toner dirt 7-64
(6-9)Periodic toner dirt 7-64
(6-10)No image comes out (Black) 7-66
(6-11)Horizontal streaks, band (White, black) 7-67
(6-12)Irregular horizontal white streaks, white spots 7-68
(6-13)Horizontal uneven density 7-69
(6-14)Image is missing partly 7-69
(6-15)Offset 7-69
(6-16)Gradation reproducibility is low 7-70
(6-17)Blurred image 7-71
(6-18)Light vertical black streaks at both edge of paper which is outside of the image area 7-71
(6-19)Vertical streaks or bands 7-71
(6-20)Vertical uneven density 7-72
(6-21)Vertical streaks, band (white) 7-72
(6-22)Uneven halftone image 7-73
7 - 2 Feeding/Conveying Failures 7-74
(1) Prior standard check items 7-74
(1-1)Paper jam due to the cover-open detection 7-75
(1-2)Paper jam due to the wave or curl in the fuser section of the damp paper 7-75
(1-3)Paper jam due to the dog-ear, paper skew, paper creases, fusing failure or the paper curl 7-75
(1-4)Paper jam due to the guide 7-76

(1-5)Paper jam caused by improperly loaded paper in the cassette 7-76
(1-6)Paper jam due to the inferior paper 7-76
(1-7)Paper jam from the factor of the conveying roller, motor or clutch 7-77
(1-8)Paper jam due to the sensor 7-77
(1-9)Paper jam due to the setting / detection failure 7-78
(1-10)Paper jam due to the static electricity 7-78
(1-11)Paper jam caused by the installation environment
(Papers inside the cassette are always damp.) 7-78
(2) Paper mis-feed detection 7-79
(2-1)Paper mis-feed indication 7-79
(2-2)Paper mis-feed detection condition 7-81
(3) Jam Codes 7-85
(4) Other Feeding/Conveying Failures 7-239
(4-1)Paper creases (Fuser factor) 7-240
(4-2)Paper creases (Registration or Transfer factor) 7-241
(4-3)Broken ears due to catching the tip angle of the paper in the PH cutter receiving hole 7-242
(4-4)Dog-ear 7-242
7 - 3 Self Diagnostic 7-243
(1) Self diagnostic error codes 7-243
(1-1)Error codes list 7-243
(1-2)Content of Self diagnostic 7-248
(2) System Error (Fxxxx) 7-351
(2-1)System Error code list 7-351
(2-2)Content of System Error (Fxxxx) 7-353
7 - 4 FAX Related Errors 7-370
(1) FAX Related Errors 7-370
(1-1)The login fails with other than the ID card 7-371
(1-2)C0030: FAX PWB system error 7-371
(1-3)C0070: FAX PWB incompatible detection error 7-371
(1-4)C0650: FAX image storage pair-check error 7-371
(1-5)C0830: FAX PWB flash program area checksum error 7-372
(1-6)C0870: PC/FAX Image data transmission error 7-372
(1-7)C0920: FAX file system error 7-372
(1-8)C0950: FAX job stay error 7-373
(1-9)F14D: Abnormal detection at the FAX control section 7-373
(1-10)The FAX cannot be sent 7-373
(1-11)The beep sounds when the copying or printing is finished 7-373
(1-12)In case of sending an A3/Ledger or B4 size original by internet fax,
all will be sent by A4/Letter. 7-374
(2) Communication Errors 7-375
7 - 5 Send Related Errors 7-395
(1) Send Related Errors 7-395
(1-1)The sending error 2101 does not disappear even if changing the host name or
the security software settings 7-395
(1-2)Sending error 2203 does not disappear 7-395
(1-3)When scanning the original loaded on the contact glass to send,the scanned data is
automatically sent. 7-395
(2) Sending Errors (Error Codes) 7-396
(2-1)Scan to E-mail Error Codes 7-396
(2-2)Scan to FTP Error Codes 7-401
(2-3)Scan to SMB Error Codes 7-406
7 - 6 Print Errors 7-409
(1) The paper loading message appears 7-410
(2) Orientation is different 7-411
(3) Paper is fed from the MP tray 7-411
(4) Garbled characters 7-412
(5) Paper is not fed from the MP tray 7-412
(6) The same data is repeatedly printed out 7-412
(7) PC window shows "Print job error","Standby" or "Printer unavailable" is indicated on
the printer properties 7-412

(8) Processing and Memory lamps are lit while the printer standby message is indicated 7-413
(9) Data is not printed out in Sleep mode due to the main unit startup error. Processing/Memory lamp is turned on 7-413
(10) Print stops after printing several pages and locks up. Processing and Memory lamps on operation panel are lit 7-413
(11) Print out is not available from the network factor (1) 7-414
(12) Print out is not available from the network factor (2) 7-414
(13) Print out is not available from the network factor (3) 7-414
(14) Print out is not available from the network factor (4) 7-415
(15) Print out is not available from the network factor (5) 7-415
(16) Print out is not available from the network factor (6) 7-416
(17) Print out is not available from the network factor (7) 7-416
(18) Print out is not available from the printer driver setting factor (1) 7-416
(19) Print out is not available from the printer driver setting factor (2) 7-417
(20) Print out is not available from the printer driver setting factor (3) 7-417
(21) Print out is not available from the printer driver setting factor (4) 7-417
(22) Print out is not available from the printer driver setting factor (5) 7-417
(23) Print out is not available from the printer driver setting factor (6) 7-417
(24) Data is not printed out due to the printer driver setting (7) 7-418
(25) The printed image is partly missing 7-418
(26) "Paper Mismatch Error" appears 7-419
7 - 7 Error Messages 7-420
(1) "Check the document processor" is displayed 7-421
(2) "The error occurred in the cassette X" is displayed (Cassette 1,2) even after removing/inserting the cassette and checking/removing paper remaining in the main unit 7-421
(3) "The error occurred in the cassette X" is displayed (Cassette 3,4) even after removing/inserting the cassette and checking/removing paper remaining in the main unit 7-422
(4) "The error occurred in the cassette 5" is displayed even after removing/inserting the cassette and checking/removing paper remaining in the main unit 7-422
(5) The cover open message appears after closing the front cover 7-423
(6) The cover open message appears after closing the right cover or the maintenance front cover 7-423
(7) The add paper message appears while the paper is loaded on the MP tray 7-424
(8) The message "Waste toner box is full." is wrongly displayed 7-424
(9) When DP is used,"Remove the original from document processor." is wrongly displayed 7-424
(10) When DP is used, document no-feed occurs and "Replace all originals." is displayed 7-424
(11) The operation panel remains displaying "Network device is starting" 7-425
(12) The waste toner box is installed, but "Install the waste toner box" is displayed. 7-425
(13) "Memory is full" is displayed at Scan to SMB. 7-425
7 - 8 Abnormal Noise 7-426
(1) Abnormal sound (basic support excluding fuser section) 7-427
(2) Abnormal sounds from the paper conveying section 7-427
(3) Abnormal sound from the developer section 7-427
(4) Abnormal sound from the document processor 7-428
(5) Abnormal sounds from the exit unit (cracking sounds) 7-428
(6) Abnormal sound from the exit section 7-428
(7) Fan rotating sounds are noisy 7-428
(8) Abnormal sound from the primary paper feed section 7-429
(9) Abnormal sound from the machine front side 7-429
(10) Abnormal sound from the fuser section 7-429
(11) Abnormal sound from the fuser exit section 7-430
(12) Abnormal sounds from the IH unit (buzzing sounds) 7-430
(13) Abnormal sound from inside the machine 7-430
(14) Abnormal sound from inside the machine 7-430
(15) Abnormal sound from inside the machine 7-430
(16) Abnormal sound from inside the machine (jumping sounds) 7-432
(17) The drive sounds are noisy waiting 7-432
(18) Abnormal sound when driving the transfer belt (Tooth jumping sounds) 7-432
(19) Abnormal sounds from the image scanning section 7-432
(20) Abnormal sounds from the bridge unit (cracking sounds when conveying the paper) 7-433

7 - 9 Malfunction 7-434
(1) The size of the paper loaded in the cassette is falsely detected or not displayed (cassettes 1 and 2). 7-435
(2) The size of the paper loaded in the cassette is falsely detected or not displayed (cassettes 3 and 4) 7-436
(3) The MP tray paper size is misdetected 7-437
(4) The developer fan motor does not rotate 7-437
(5) The main unit malfunctions even if turning on the power switch 7-438
(6) Toner falls over the paper conveying section 7-438
(7) No display in the operation panel 7-438
(8) The operation panel remains "Welcome!" 7-439
(9) No action by pressing the operation panel 7-439
(10) The login fails with other than the ID card 7-439
(11) The original size on the original glass is misdetected. 7-439
(12) The container cover is not opened although the toner container is not installed. 7-440
(13) The FAX icon is not displayed on the operation panel even if installing the FAX PWB. 7-440
(14) The finisher is not displayed on the operation panel even if the 4,000 - sheet finisher is installed. 7-440
(15) The Job separator LED continuously turns on even if removing the paper from the JS tray 7-441
(16) Even if the option cassette is installed, it is not displayed on the operation panel. 7-441
7 - 10 Others 7-442
(1) Adjusting the center position for the punch unit and the paper width guides 7-442
(1-1)Adjusting the center position for the punch unit 7-442
(1-2)Adjusting the center position for each paper source (except the MP tray) 7-443
(1-3)Adjusting the center line at U034 7-444
(2) Procedure to check the pressure release gear 7-445
(3) Corrective measures for the abnormal sound when collecting the waste toner 7-446
(4) Procedures for cleaning and fixing the contacts 7-450
(5) Procedures for cleaning the shaft of the developer roller and DS pulleys 7-455
(6) Procedures for cleaning the LSU light path 7-456
(7) Refastening the screw for fixing the ground plate 7-456

8 PWBs 8-1

8 - 1 Description for PWB 8-1
(1) Main PWB 8-1
(1-1)PWB photograph 8-1
(1-2)Connector position 8-1
(1-3)Connector lists 8-2
(2) Engine PWB 8-13
(2-1)PWB photograph 8-13
(2-2)Connector position 8-13
(2-3)Connector lists 8-14
(3) Image drive PWB 8-20
(3-1)PWB photograph 8-20
(3-2)Connector position 8-20
(3-3)Connector lists 8-21
(4) Feed Drive PWB 8-27
(4-1)PWB photograph 8-27
(4-2)Connector position 8-27
(4-3)Connector lists 8-28
(5) Front drive PWB 8-33
(5-1)PWB photograph 8-33
(5-2)Connector position 8-33
(5-3)Connector lists 8-34
(6) Drum/Developer relay PWB 8-37
(6-1)PWB photograph 8-37
(6-2)Connector position 8-37
(6-3)Connector lists 8-38
(7) Main high voltage PWB 8-39
(7-1)PWB photograph 8-39
(7-2)Connector position 8-39
(7-3)Connector lists 8-40

(8) Transfer high voltage PWB 8-41
(8-1)PWB photograph 8-41
(8-2)Connector position 8-41
(8-3)Connector lists 8-42
(9) Power supply PWB 8-43
(9-1)PWB photograph 8-43
(9-2)Connector position 8-43
(9-3)Connector lists 8-44
(10) Operation panel main PWB 8-46
(10-1)PWB photograph 8-46
(10-2)Connector position 8-46
(10-3)Connector lists 8-47
(11) IH PWB 8-51
(11-1)PWB photograph 8-51
(11-2)Connector position 8-51
(11-3)Connector lists 8-52
(12) Fuser high voltage PWB 8-53
(12-1)PWB photograph 8-53
(12-2)Connector position 8-53
(12-3)Connector lists 8-53
8 - 2 Description for PWB (OPTION) 8-54
(1) PF PWB (PF-7140) 8-54
(1-1)PWB photograph 8-54
(1-2)Connector position 8-54
(1-3)Connector lists 8-55
(2) PF PWB (PF-7150) 8-58
(2-1)PWB photograph 8-58
(2-2)Connector position 8-58
(2-3)Connector lists 8-59
(3) PF PWB (PF-7120) 8-62
(3-1)PWB photograph 8-62
(3-2)Connector position 8-62
(3-3)Connector lists 8-63
(4) DP PWB (DP-7150) 8-65
(4-1)PWB photograph 8-65
(4-2)Connector position 8-65
(4-3)Connector lists 8-66
(5) DP PWB (DP-7160/DP-7170) 8-69
(5-1)PWB photograph 8-69
(5-2)Connector position 8-69
(5-3)Connector lists 8-70
(6) DP relay PWB (for DP-7160/DP-7170) 8-74
(6-1)PWB photograph 8-74
(6-2)Connector position 8-74
(6-3)Connector lists 8-75
(7) DF PWB (DF-7100) 8-77
(7-1)PWB photograph 8-77
(7-2)Connector position 8-77
(7-3)Connector lists 8-78
(8) PH PWB (7100/7120/7130) 8-82
(8-1)Connector position 8-82
(8-2)Connector lists 8-82
(9) BR PWB (AK-7110) 8-84
(9-1)PWB photograph 8-84
(9-2)Connector position 8-84
(9-3)Connector lists 8-85
(10) DF PWB (DF-7140) 8-86
(10-1)PWB photograph 8-86
(10-2)Connector position 8-86
(10-3)Connector lists 8-87

(11) MT PWB (MT-730(B)) ... 8-93
(11-1)PWB photograph ... 8-93
(11-2)Connector position ... 8-93
(11-3)Connector lists ... 8-94
(12) BF PWB (BF-730) ... 8-96
(12-1)PWB photograph ... 8-96
(12-2)Connector position ... 8-96
(12-3)Connector lists ... 8-97
(13) PH PWB (PH-7) ... 8-100
(13-1)PWB photograph ... 8-100
(13-2)Connector position ... 8-100
(13-3)Connector lists ... 8-101
(14) DF PWB (DF-7120) ... 8-103
(14-1)PWB photograph ... 8-103
(14-2)Connector position ... 8-103
(14-3)Connector lists ... 8-104
(15) JS PWB (JS-7110) ... 8-108
(15-1)PWB photograph ... 8-108
(15-2)Connector position ... 8-108
(15-3)Connector lists ... 8-109
(16) DF PWB (DF-7150) ... 8-110
(16-1)PWB photograph ... 8-110
(16-2)Connector position ... 8-110
(16-3)Connector lists ... 8-111
(17) BF PWB (BF-9100) ... 8-121
(17-1)PWB photograph ... 8-121
(17-2)Connector position ... 8-121
(17-3)Connector lists ... 8-122
(18) Inserter (IS-7100) ... 8-125
(18-1)PWB photograph ... 8-125
(18-2)Connector position ... 8-125
(18-3)Connector lists ... 8-126
(19) Z-folding unit (ZF-7100) ... 8-130
(19-1)PWB photograph ... 8-130
(19-2)Connector position ... 8-130

9 Appendixes ... 9-1

9 - 1 Repetitive defects gauge ... 9-1
9 - 2 Firmware environment commands ... 9-2
9 - 3 Chart of image adjustment procedures ... 9-10
9 - 4 Wiring diagram ... 9-15
(1) Engine PWB/Feed drive PWB and High voltage PWB ... 9-15
(2) Laser scanner and Waste toner box ... 9-16
(3) Image drive PWB1 ... 9-17
(4) Image drive PWB 2 (60 ppm / 70 ppm model) ... 9-18
(5) Image drive PWB 2 (40 ppm/50 ppm model) ... 9-19
(6) Feed drive PWB 1 ... 9-20
(7) Feed drive PWB 2 ... 9-21
(8) Drum/Developer relay PWB ... 9-22
(9) Fuser PWB and IH PWB ... 9-23
(10) Low power voltage PWB and Paper feeder connection ... 9-24
(11) Operation panel PWB and Main PWB ... 9-25
(12) Image scanner and DP connection ... 9-26
(13) Conveying unit/Document finisher connection and JS connection ... 9-27
(14) Other options connection ... 9-28
9 - 5 Wiring diagram (Options) ... 9-29
(1) Document processor (DP-7150) ... 9-29
(2) Document processor (DP-7160/DP-7170) ... 9-30
(3) Paper Feeder (PF-7140) ... 9-32

(4) Large capacity paper feeder (PF-7150) 9-33
(5) Side Deck (PF-7120) 9-34
(6) Finisher (DF-7100) 9-35
(7) Punch unit (7110/7120/7130): Optional item (Enhancement) for DF-7100 9-36
(8) Finisher (DF-7140) 9-37
(9) Mailbox (MT-730(B)): Optional item (Enhancement) for DF-7140 9-39
(10) Booklet folding unit (BF-730): Optional item (Enhancement) for DF-7140 9-40
(11) Punch Unit (PH-7): Optional item (Enhancement) for DF-7140/7120/7150 9-41
(12) 1000-sheet Finisher (DF-7120) 9-42
(13) 100 sheet staple finisher (DF-7150) 9-43
(14) Booklet folding Unit (BF-9100): DF-7150 only 9-46
(15) Inserter (IS-7100) 9-47
(16) Z folding unit (ZF-7100) 9-50
9 - 6 Installation manual 9-52
⑴ AK-7100/AK-7110 9-52
⑵ AK-7120 9-59
⑶ BF-730 9-87
⑷ BF-9100 9-105
⑸ DF-7100 9-121
⑹ DF-7120 9-131
⑺ DF-7140 9-149
⑻ DF-7150 9-160
⑼ DP-7150 9-169
⑽ DP-7160/DP-7170 9-196
⑾ FAX System12 9-224
⑿ IS-7100 9-239
⒀ JS-7100 9-256
⒁ JS-7110 9-260
⒂ MT-730(B) 9-284
⒃ PF-7120 9-299
⒄ PF-7140 9-326
⒅ PF-7150 9-339
⒆ PH-7A/PH-7B/PH-7C/PH-7D 9-361
⒇ PH-7100/PH7110/PH-7120/PH-7130 9-384
(21) Printing System 17 9-402

1 Specification

1 - 1 Specifications

(1)Common function

Items		Specification
Type		Desktop
Printing Method		Electrophotography by semiconductor laser
Paper Weight	**Cassette**	52 to 300 g/m^2
	Multi Purpose Tray	52 to 300 g/m^2, Banner sheet: 136 to 163g/m^2
Media type	**Cassette**	Plain, Vellum, Recycle, Preprint, Bond, Hagaki, Color, Punched, Letterhead, Thick, Envelope, High Quality, Custom 1 to 8 (Duplex: Same as Simplex)
	Multi Purpose Tray	Plain, Transparency (OHP film), Vellum, Labels, Recycle, Preprint, Bond, Hagaki, Color, Punched, Letterhead, Thick, Envelope, Coated, High Quality, Index Tab Dividers, Custom 1 to 8
Paper size	**Cassette 1**	A4, A5, A6, B5, B6, Letter, Legal, Statement, Executive, Oficio II, Folio, 16K, ISO B5, Envelope #10, Envelope #9, Envelope #6, Envelope Monarch, Envelope DL, Envelope C5, Hagaki, Ofukuhagaki, Kakugata 2, Yokei 4, Yokei 2, Chokei 3, Custom 1 to 4 (98 x 148 to 297 x356 mm)
	Cassette 2	A3, A4, A5, A6, B4, B5, B6, 216x340 mm, SRA3, Ledger, Letter, Legal, Statement, Executive, 12x18", Oficio II, Folio, 8K, 16K, ISO B5, Envelope #10, Envelope #9, Envelope #6, Envelope Monarch, Envelope DL, Envelope C5, Envelope C4, Hagaki, Ofukuhagaki, Kakugata 2, Yokei 4, Yokei 2, Chokei 3, Custum 1 to 4 (98 x 148 to 320 x 457 mm)
	Multi Purpose Tray	A3, A4, A5, A6, B4, B5, B6, 216 x 340 mm, SRA3, Ledger, Letter, Legal, Statement, Executive, 12 x 18", Oficio II, Folio, 8K, 16K, ISO B5, Envelope #10, Envelope #9, Envelope #6, Envelope Monarch, Envelope DL, Envelope C5, Envelope C4, Hagaki (Cardstock), Oufuku Hagaki (Return postcard), Youkei 4, Youkei 2, Yonaga 3, Chokei 3. Chokei 4 Custom 1 to 4 (98 x 148 mm to 320 x 457 mm) 1 sheet (Banner sheet (10 x 488.1 to 304.8 x 1,219 mm/ 8.26" x 19.22" to 12" x 48")
Printable Area		Print margin for top is 4.0+1.5/-0mm, and bottom and both sides is 4 mm or less
Warm-up Time (22°C, 60%)	**Power on**	40 ppm model: 17 seconds or less 50 ppm model: 17 seconds or less 60 ppm model: 17 seconds or less 70 ppm model: 17 seconds or less
	Low Power	40 ppm model: 14.4 seconds or less 50 ppm model: 14.4 seconds or less 60 ppm model: 14.4 seconds or less 70 ppm model: 14.4 seconds or less
	Sleep	40 ppm model: 14.4 seconds or less 50 ppm model: 14.4 seconds or less 60 ppm model: 14.4 seconds or less 70 ppm model: 14.4 seconds or less

Items		Specification
Paper Capacity	**Cassette**	600 sheets (64 g/m^2)*1, 500 sheets (80 g/m^2)*1
	Multi Purpose Tray	165 sheets (A4/Letter or smaller) (64 g/m^2) 150 sheets (A4/Letter or smaller) (80 g/m^2) 55 sheets (lager than A4/Letter) (64 g/m^2) 50 sheets (lager than A4/Letter) (80 g/m^2) 1 sheet (Banner sheet (210x470.1 to 304.8x1,220 mm/8.26"x18.5" to 12"x48")), (136 to 163 g/m2)
Output Tray Capacity	**Inner tray**	500 sheets (80 g/m^2)
	Job separator	100 Sheets (80 g/m^2)
Image Write System		Semiconductor laser and electrophotography (4 beam)
Light source		LED
Scanning method		Flat surface scanning by the CMOS image sensor
Photoconductor		a-Si drum (Diameter 30 mm)
Charging system		a-Si AC superimposed charging roller
Developer system		Non-magnetic dual-component developing system Toner amount control: feedback system with magnetic permeability sensor
Transfer system		Primary: Transfer belt method Secondary: Transfer roller method
Separation system		Curvature separation and separation needle (Input DC voltage)
Cleaning system	**Drum**	Counter blade + Rubbing roller cleaning system
	Primary transfer	Brush cleaning system
Charge erasing system		Exposure by cleaning lamp (LED)
Fusing system		IH Sliding fuser system Heat source: IH Overheat protection devices: thermal cutout
Memory		Default: 4GB
Large capacity storage		SSD 64 GB/(Option HDD: 320GB/1TB) SSD 32 GB/HDD 320 GB (Option: 1TB) (North America specification)
Interface	**Standard**	Super-Speed USB: 1 Network interface: 1 (1000 BASE-T/100 BASE-TX/10 BASE-T (IPv6, IPv4, IPSec), 802.3az supported) Hi-Speed USB: 4 (USB Flash memory slot)
	Optional items	eKUIO: 2 *2 Fax: 2 *3 Wireless LAN: 1 (Option) *4
Operating Environment	**Temperature**	10 to 32.5°C/50 to 90.5°F
	Humidity	10 to 80%RH
	Altitude	3,500 m/11,482 ft maximum
	Brightness	1,500 lux maximum
Dimension (WxDxH)		602x665x790 mm/23.71"x26.19"x31.11"

Items	Specification
Weight (without toner container)	Approx. 85 kg/Approx. 187.4 lbs (without toner container)
Space Required (WxD)	920x665 mm/36.23"x26.19" (Using multi purpose tray)
Power source	1100V Model: 100V ~ 50/60Hz, 15A 110V Model: 110V ~ 60Hz, 15A 120V Model: 120V ~ 60Hz, 12A 220-240V Model: 200-240V ~ 50Hz, 7.2A

*1: Up to upper limit height line in the cassette.

*2: In case that two optional interfaces are installed, a fax line can not be installed.

*3: In case that IB-50 or IB-51 is installed, only one fax line can be installed.

*4: Standard for North Americas

(2)Copy Functions

(2-1)Copy speed

Model	Paper size	B/W copy
40 ppm	A4/Letter	40 sheets/min
	A4-R/Letter-R	28 sheets/min
	A3/Ledger	20 sheets/min
	B4/Legal	24 sheets/min
	B5	40 sheets/min
	B5-R	28 sheets/min
	A5-R	32 sheets/min
	A6-R	20 sheets/min
50 ppm	A4/Letter	50 sheets/min
	A4-R/Letter-R	35 sheets/min
	A3/Ledger	25 sheets/min
	B4/Legal	30 sheets/min
	B5	50 sheets/min
	B5-R	35 sheets/min
	A5-R	40 sheets/min
	A6-R	25 sheets/min
60 ppm	A4/Letter	60 sheets/min
	A4-R/Letter-R	42 sheets/min
	A3/Ledger	30 sheets/min
	B4/Legal	36 sheets/min
	B5	60 sheets/min
	B5-R	42 sheets/min
	A5-R	48 sheets/min
	A6-R	30 sheets/min
70 ppm	A4/Letter	70 sheets/min
	A4-R/Letter-R	49 sheets/min
	A3/Ledger	35 sheets/min
	B4/Legal	42 sheets/min
	B5	70 sheets/min
	B5-R	49 sheets/min
	A5-R	48 sheets/min
	A6-R	30 sheets/min

(2-2)First Copy Time(A4, place on the platen, feed from Cassette)

Model	B/W copy
40ppm	4.5 sconds or less
50ppm	3.7 sconds or less
60ppm	3.4 sconds or less
70ppm	3.4 sconds or less

(2-3)Zoom Level

Mode	Zoom level
Manual mode	25 to 400%, 1% increments
Auto mode	400%, 200%, 141%, 122%, 115%, 100%, 86%, 81%, 70%, 50%, 25%

(2-4)Resolution

Item		B/W
Scanning	Table	600 × 600 dpi
	DP	600 × 600 dpi/ 600 × 300 dpi/300 × 300dpi
Printing		1200 × 1200 dpi (Multi-bit)

(2-5)Others

Items	Specification
Continuous Copy	1 to 998 sheets
Copy Original Types	Sheet, Book, 3-dimensional objects (Maximum original size: A3/Ledger)
Copy Original Feed System	Fixed

(3)Printer Functions

(3-1)Print speed

Print speed for the paper sizes other than in this table are same as the copy speed.

Model	Paper size	Print speed
40ppm	12×18"/SRA3	20 sheets/min
50ppm	12×18"/SRA3	25 sheets/min
60ppm	12×18"/SRA3	30 sheets/min
70ppm	12×18"/SRA3	35 sheets/min

(3-2)First print time (A4/LTR)

Model	Print speed
40ppm	5.1 sconds or less
50ppm	4.3 sconds or less
60ppm	3.8 sconds or less
70ppm	3.7 sconds or less

(3-3)Resolution

UI name	Data resolution	Output resolution
600dpi	600dpi	4800dpi (equivalent) × 1200dpi
1200dpi	1200dpi	4800dpi (equivalent) × 1200dpi

(3-4)Others

Items	Specification
OS	Windows 7, Windows 8.1, Windows 10, Windows Server 2008/R2, Windows Server 2012/R2, Windows Server 2016, Mac OS X v10.9 or later
Page discription langage	PRESCRIBE
Emulation	PCL6 (PCL-XL, PCL5c, PCL5e), KPDL3 (PostScript3 conpatible), PDF, XPS, OpenXPS

(4)Scanner Functions

(4-1)Scan speed (A4/LTR 300dpi/600dpi, [Text+Photo] mode)1

DP-7150

Model	Mode	B/W	Color
70/60/50/40ppm (Simplex)	300dpi	80 images/min	80 images/min
	600dpi	60 images/min	60 images/min
70/60/50/40ppm (Duplex)	300dpi	48 images/min	48 images/min
	600dpi	36 images/min	36 images/min

DP-7160

Model	Mode	B/W	Color
70/60/50/40ppm (Simplex)	300dpi	137 images/min	137 images/min
	600dpi	75 images/min	70 images/min
70/60/50/40ppm (Duplex)	300dpi	274 images/min	274 images/min
	600dpi	-	-

DP-7170

Model	Mode	B/W	Color
70/60/50/40ppm (Simplex)	300dpi	137 images/min	137 images/min
	600dpi	75 images/min	70 images/min
70/60/50/40ppm (Duplex)	300dpi	274 images/min	274 images/min
	600dpi	-	-

(4-2)Others

Items	Specification
Resolution	600 dpi × 600 dpi, 400 dpi × 400 dpi, 200 dpi × 400 dpi, 300 dpi × 300 dpi, 200 dpi × 200 dpi, 200 dpi × 100 dpi
File format	TIFF, JPEG, XPS, OpenXPS, PDF (MMR/JPG compression/high compression PDF), Serchable PDF (Optional), MS Office file (Optional)
Interface	Ethernet (10BASE-T/100BASE-TX/1000BASE-T)
Sent mode	SMB, SMTP, FTP, FTP over SSL, TWAIN*1, WIA*2 WSD

*1 OS：Windows Server 2008/ Windows Server 2008 R2/ Windows 7/ Windows 8/ Windows 8.1/ Windows 10/ Windows Server 2012 /Windows Server 2012 R2/Windows Server 2016

*2 Windows Server 2008/ Windows Server 2008 R2/ Windows 7/ Windows 8/ Windows 8.1/ Windows 10/ Windows Server 2012 /Windows Server 2012 R2/Windows Server 2016

(5)Optional items

(5-1)Document Processor (DP-7150/DP-7160/DP-7170)

Items	Reversing auto	Dual scan
Product name	DP-7150	DP-7160/DP-7170
Feed system	Auto feed	Auto feed
Original	Sheet	Sheet
Original size	Max: A3/Ledger (297 × 432 mm) (Banner: 297 × 1,900 mm) Min: A6-R/Statement-R (105 × 148) mm	Max: A3/Ledger (297 × 432 mm) (Banner: 297 × 1,900 mm) Min: A6-R/Statement-R (105 × 148) mm
Original weight	Sim: 35 to 160 g/m² Dup: 50 to 120 g/m²	Sim: 35 to 220 g/m² Dup: 50 to 220 g/m²
Feed tray capacity	140 sheets or less (50 to 80 g/m²)*1	320 sheets or less (50 to 80 g/m²)*1
Dimensions (W × D × H)	593 × 532 × 146 mm	600 × 539 × 185 mm
Weight	Approx. 8.4kg	Approx. 13.3kg

*1 Up to upper limit height line in the document processor.

(5-2)500 sheetsx2 Paper feeder cross-section view (PF-7140)

Items	Specification
Paper Supply Method	Friction roller feeder (No. Sheets: 550 (64 g/m²)x2 cassettes/500(80g/m²)x2 cassettes)
Paper size	A3, A4, A5, A6, B4, B5, B6, 216x340 mm, SRA3, Ledger, Letter, Legal, Statement, Executive, 12x18", Oficio II, Folio, 8K, 16K, ISO B5, Envelope #10, Envelope #9, Envelope #6, Envelope Monarch, Envelope DL, Envelope C5, Envelope C4, Hagaki, Ofukuhagaki, Kakugata 2, Yokei 4, Yokei 2, Chokei 3, Custum 1 to 4 (98x148 to 320x457 mm/3.86 x 5.83 to 12.6 x 18 inch)
Supported Paper	Paper weight: 52 to 300 g/m² Media types: Plain, Recycled, Material
Dimension (WxDxH)	600x665x323.2 mm/23.63"x26.19"x12.73"
Weight	Approx. 23 kg/Approx. 50.8 lbs

(5-3)1,500 sheetx2 Large capacity feeder (PF-7150)

Items	Specification
Paper Supply Method	Friction roller feeder (No. Sheets: 1,750 (64 g/m²)x2 cassettes/1,500 (80g/m²)x2 cassettes)
Paper size	A4, B5, Letter
Supported Paper	Paper weight: 52 to 300 g/m² Media types: Plain, Recycled, Material
Dimension (WxDxH)	600x665x323.2 mm/23.63"x26.19"x12.73"
Weight	Approx. 30 kg/Approx. 66.2 lbs

(5-4)3000 sheetx1 Side feeder (PF-7120)

Items	Specification
Paper Supply Method	Feed and reverse roller method (No. Sheets: 3500 (64 g/m²)x1 cassettes/3000 (80g/m²)x1 cassettes)
Paper size	A4, B5, Letter
Supported Paper	Paper weight: 60 to 300 g/m² Media types: Plain, Recycled, Material
Dimension (WxDxH)	351x585x 69 mm/23.27"x20.36"x39.58"
Weight	Approx. 26.5 kg/Approx. 66.2 lbs

(5-5)Inner Finisher (DF-7100)

<table>
<tr><th colspan="2">Items</th><th colspan="2">Specification</th></tr>
<tr><td colspan="2">Number of Trays</td><td colspan="2">1 tray</td></tr>
<tr><td colspan="2">Paper Size (80 g/m²)
Finisher tray
(No stapling)</td><td colspan="2">A3, B4, 216x340 mm, SRA3, Ledger, Legal, 12x18", Oficio II, Folio, 8K, Envelope C4: 250 sheets
A4-R, A4, A5-R, A5, A6, B5-R, B5, B6, Letter-R, Letter, Statement, Executive, 16K-R, 16K, ISO B5, Envelope #10, Envelope #9, Envelope #6 3/4,Envelope Monarch, Envelope DL, Envelope C5, Hagaki (Cardstock), Oufukuhagaki (Return postcard), Youkei 4, Youkei 2: 500 sheets</td></tr>
<tr><td rowspan="3">Stapling</td><td rowspan="2">Number of sheets to limit</td><td>A3, B4, 216x340 mm, Ledger, Legal, Oficio II, 8K</td><td>30 sheets (52 to 105 g/m²)
2 cover sheet only (106 to 300 g/m²)</td></tr>
<tr><td>A4-R, A4, B5, Letter-R, Letter, 16K</td><td>50 sheets (52 to 90 g/m²)
40 sheets (91 to 105 g/m²)
2 cover sheets only (106 to 300 g/m²)</td></tr>
<tr><td>Media type</td><td colspan="2">Plain, Recycled, Prepunched, Preprinted, Bond, Letterhead, Color, Coated, Thick, High Quality, Custom</td></tr>
<tr><td colspan="2">Dimension (WxDxH)</td><td colspan="2">694.8x533.1x220.5 mm/27.36"x20.99"x8.69" (When pulling the tray)</td></tr>
<tr><td colspan="2">Weight</td><td colspan="2">Approx. 11.5 kg or less/Approx. 25.4 lbs. or less</td></tr>
</table>

(5-6)Punch Unit (For Inner Finisher) (PH-7100/7120/7130)

Items	Specification
Paper Size	A3, A4-R, A4, A5-R, B4, B5-R, B5, Ledger, Letter-R, Letter, Legal, Statement-R, 12x18", Folio, 8K, 16K-R, 16K
Paper Weight	52 to 300 g/m2
Media type	Plain, Preprinted, Bond, Recycled, Letterhead, Color, Thick, Coated, High Quality, Custom 1 to 8

(5-7)1000-sheet Finisher (DF-7120)

Items		Specification	
Number of Trays		1 tray	
Paper Size (80 g/m²)	Finisher tray (No staple)	A3, A5-R, B4, B5-R, B6-R, 216x340 mm, SRA3, Ledger, Legal, Statement-R, Executive, 12x8", Oficio II, Folio, 8K, 16K-R: 500 sheets A4-R, A4, B5, Letter-R, Letter, 16K: 1,000 sheets	
Paper Weight		Stapling: 90 g/m² or less	
Stapling	Number of sheets to limit	A3, B4, B5-R, 216x340 mm, Ledger, Legal, 12x18", Oficio II, 16K-R, 8K	30 sheets (52 to 105 g/m²) 2 cover sheets only (106 to 300 g/m²)
		A4-R, A4, B5, Letter-R, Letter, 16K	50 sheets (52 to 90 g/m²) 40 sheets (91 to 105 g/m²) 2 cover sheets only (106 to 300 g/m²)
	Media type	Plain, Recycled, Prepunched, Preprinted, Bond, Letterhead, Color, Coated, Thick, High Quality, Custom	
Dimension (WxDxH)		548x618.5x1,050 mm/21.58"x24.36"x41.34"	
Weight		Approx. 30 kg / Approx. 66.2 lbs	
Space Required (WxD)		666x618.5 mm/26.23"x24.36" (with the tray pulled out)	

(5-8)4000-sheet Finisher (DF-7140)

Items		Specification	
Number of Trays		2 tray	
Paper Size (80 g/m²)	Tray A (No stapling)	A3, B4, B5-R, 216x340 mm, SRA3, Ledger, Legal, Executive, 12x18", Oficio II, Folio, 8K, 16K-R: 1,500 sheetsA5-R, B6-R, Statement-R: 500 sheets A4-R, A4, B5, Letter-R, Letter, 16K: 4,000 sheets A5-R, B6-R, Statement-R: 500 sheets	
	Tray B	A3, A4-R, A4, A5-R, A6-R, B4, B5-R, B5, B6-R, 216x340 mm, SRA3, Ledger, Letter-R, Letter, Legal, Statement-R, Executive, 12x18", Oficio II, Folio, 8K, 16K-R, 16K, ISO B5, Cardstock, Oufuku hagaki (Return postcard), Youkei 4,Youkei 2: 200 sheets	
Paper Weight		Stapling: 90 g/m² or less	
Stapling	Number of sheets to limit	A3, B4, B5-R, 216x340 mm, Ledger, Legal, 12x18", Oficio II, 16K-R, 8K	30 sheets (52 to 105 g/m²) 2 cover sheets only (106 to 300 g/m²)
		A4-R, A4, B5-R, B5, Letter-R, Letter, 16K-R, 16K	70 sheets (52 to 74 g/m²) 65 sheets (75 to 90 g/m²) 55 sheets (91 to 105 g/m²) 2 cover sheets only (106 to 300 g/m²)
	Media type	Plain, Recycled, Prepunched, Preprinted, Bond, Letterhead, Color, Coated, Thick, High Quality, Custom	
Dimension (WxDxH)		607.2x668.5x1,061.3 mm/23.27"x20.36"x39.58"	
Weight		Approx. 40 kg or less/Approx. 26.5 lbs or less	
Space Required (WxD)		725x668.5 mm/26.23"x24.36" (with the tray pulled out)	

(5-9)100 sheet staple finisher (DF-7150)

Items		Specification	
Number of Trays		2 tray	
Paper Size (80 g/m²)	Tray A (No stapling)	A3, B4, B5-R, 216x340 mm, SRA3, Ledger, Legal, Executive, 12x18", Oficio II, Folio, 8K: Hight 227 mm (1,500 sheets equivalent) A4-R, A4, B5, Letter-R, Letter, 16K-R, 16K: Hight 512 mm (4,000 sheets equivalent) A5-R, B6-R, Statement-R: Hight 91 mm (500 sheets equivalent)	
	Tray B	A3, A4-R, A4, A5-R, A5, A6-R, B4, B5-R, B5, B6-R, 216x340 mm, SRA3, Ledger, Letter-R, Letter, Legal, Statement-R, Executive, 12x18", Oficio II, Folio, 8K, 16K-R, 16K, ISO B5, Envelope #10, Envelope #9, Envelope #6, Envelope Monarch, Envelope DL, Envelope C5, Envelope C4, Hagaki, Ofukuhagaki, Kakugata 2 go, Yokei 4 go, Yokei 2 go, Chokei 3 go, Chokei 4 go: Hight 45 mm (200 sheets equivalent)	
Paper Weight		Stapling: 90 g/m² or less	
Stapling	Number of sheets to limit	A3, B4, 216x340 mm, SRA3, Ledger, Legal, 12x18", Oficio II, Folio, 8K,	50 sheets (52 to 90 g/m²) 35 sheets (91 to 105 g/m²) 2 cover sheets only (106 to 300 g/m²)
		A4-R, A4, B5-R, B5, Letter-R, Letter, 16K-R, 16K	100 sheets (52 to 90 g/m²) 70 sheets (91 to 105 g/m²) 2 cover sheets only (106 to 300 g/m²)
	Media type	Plain, Recycled, Prepunched, Preprinted, Bond, Letterhead, Color, Coated, Thick, High Quality, Custom	
Dimension (WxDxH)		870x687x1,181 mm	
Weight		Approx. 52 kg/Approx. 114,6 lbs	
Space Required (WxD)		870x687 mm/34.3"x27.0" (with the tray pulled out)	

(5-10)Punch Unit (For 1,000-Sheets/4,000-Sheets/100-Staple Finisher) (PH-7A/C/D)

Items	Specification
Paper Size	A3, A4-R, A4, A5-R, B4, B5-R, B5, Ledger, Letter-R, Letter, Legal, Statement-R, 12x18", Folio, 8K, 16K, 16K-R
Paper Weight	45 to 300 g/m2
Media type	Plain, Preprinted, Bond, Recycled, Letterhead, Color, Thick, Coated, High Quality, Custom

(5-11)Mailbox (For 4,000-Sheet Finisher (DF-7110) Optional) (MT-730 (B))

Items	Specification
Number of Trays	7 trays
Paper Size (80 g/m²)	A3, B4, Ledger, Legal, 8K: 50 sheets A4-R, A4, A5-R, B5-R, B5, 216x340 mm, Letter-R, Letter, Statement-R, Executive, Oficio II, Folio, 16K-R, 16K: 100 sheets
Dimension (WxDxH)	510x400x470 mm/20.08"x15.75"x18.51"
Weight	Approx. 10 kg/Approx. 22.1 lbs.

(5-12)Folding Unit (For 4,000-Sheet Finisher) (BF-730)

Items		Specification
Adaptable Sizes for folding	Bi-Fold	A3, B4, A4-R, Ledger, Legal, Letter-R, Oficio II, 8K
	Saddle Stitch	A3, B4, A4-R, Ledger, Legal, Letter-R, Oficio II, 8K
	Tri-Fold	A4-R, Letter-R
Adaptable number for folding	Bi-Fold	5 sheets (60 to 90 g/m²) 3 sheets (91 to 120 g/m²) 1 sheets (121 to 256 g/m²)
	Saddle Stitch	20 sheets (60 to 90 g/m²) 13 sheets (91 to 105 g/m²) 1 cover sheet only (106 g/m² or heavier)
	Tri-Fold	5 sheets (60 to 90 g/m²) 3 sheets (91 to 120 g/m²)
Maximum Number for Stack (80 g/m²)	Bi-Fold	5 sheets or less per set: 30 sets or more 6 to 10 sheets per set: 20 sets or more 11 to 16 sheets per set: 10 sets or more
	Saddle Stitch	5 sheets or less per set: 30 sets or more 6 to 10 sheets per set: 20 sets or more 11 to 16 sheets per set: 10 sets or more
	Tri-Fold	1 sheet per set: 30 sets or more 2 to 5 sheets per set: 5 sets or more
Media type	Bi-Fold	Plain, Recycled, Preprinted, Bond, Color, Prepunched, Letterhead, Thick, Coated, High Quality, Custom
	Saddle Stitch	Plain, Recycled, Preprinted, Bond, Color, Prepunched, Letterhead, Thick, Coated, High Quality, Custom
	Tri-Fold	Plain, Recycled, Preprinted, Bond, Color,Prepunched, Letterhead, Coated, High Quality,Custom

(5-13)Folding Unit (For 100-Sheet Staple finisher optional) (BF-9100)

Items		Specification
Adaptable Sizes for folding	Bi-Fold	A3, B4, A4-R, Ledger, Legal, Letter-R, Oficio II, 8K
	Saddle Stitch	A3, B4, A4-R, Ledger, Legal, Letter-R, Oficio II, 8K
	Tri-Fold	A4-R, Letter-R
Adaptable number for folding	Bi-Fold	5 sheets (60 to 90 g/m²) 3 sheets (91 to 120 g/m²) 1 sheets (121 to 256 g/m²)
	Saddle Stitch	20 sheets (60 to 90 g/m²) 13 sheets (91 to 105 g/m²) 1 cover sheet only (106 g/m² or heavier)
	Tri-Fold	5 sheets (60 to 90 g/m²) 3 sheets (91 to 120 g/m²)
Maximum Number for Stack (80 g/m²)	Bi-Fold	5 sheets or less per set: 25 sets or more 6 to 10 sheets per set: 10 sets or more 11 to 20 sheets per set: 10 sets or more
	Saddle Stitch	5 sheets or less per set: 25 sets or more 6 to 10 sheets per set: 10 sets or more 11 to 20 sheets per set: 10 sets or more
	Tri-Fold	1 sheet per set: 50 sets or more 2 to 5 sheets per set: 25 sets or more
Media type	Bi-Fold	Plain, Recycled, Preprinted, Bond, Color, Prepunched, Letterhead, Thick, Coated, High Quality, Custom
	Saddle Stitch	Plain, Recycled, Preprinted, Bond, Color, Prepunched, Letterhead, Thick, Coated, High Quality, Custom
	Tri-Fold	Plain, Recycled, Preprinted, Bond, Color,Prepunched, Letterhead, Coated, High Quality,Custom

(5-14)Job Separator Tray (JS-7100)

Items	Specification
Number of Trays	1 tray
Maximum Number for Stack	100 Sheets (80 g/m2)
Paper size	A3, A4-R, A4, A5-R, A5, A6-R, B4, B5-R, B5, B6-R, 216x340 mm, SRA3, Ledger, Letter-R, Letter, Legal, Statement-R, Executive, 12x18", Oficio II, Folio, 8K, 16K-R, 16K, ISO B5, Envelope #10, Envelope #9, Envelope #6, EnvelopeMonarch, Envelope DL, Envelope C5, Envelope C4, Hagaki (Cardstock), Oufuku hagaki (Return postcard), Youkei 4, Youkei 2, Custom (98x148 to 304.8x1,220 mm)
Supported Paper	Paper weight: 52 to 300 g/m² Media types: Plain, Recycled, Material
Dimension (WxDxH)	480x430x100 mm/18.9"x16.93"x3.94"
Weight	Approx. 0.6 kg/Approx. 1.3 lbs.

(5-15)Banner Tray (Banner Guide 10)

Items	Specification
Max. number of sheets	10 sheets (Multi Purpose tray)
Paper width	210 to 304.8 mm (8.26" to 12")
Paper length	Max. 1,219.0 mm (48")
Supported Paper	Paper weight: 136 to 163 g/m² Media types: Heavy 2
Dimension (WxDxH)	400.6x397.8x193.6 mm/15.78"x15.67"x7.63"
Weight	Approx. 0.5 kg/Approx. 1.2 lbs.

(5-16)Z folding unit (ZF-7100)

Items		Specification
Possible folding size	Z-Fold	A3,B4,A4R,11×17,8.5×14,8.5×11R,8K
	Bi-Fold	A3,B4,A4,A4R,B5R,11×17,8.5×14,8.5×11,8.5×11R,8K
	Engineering Fold (Half Z-Fold)	A3,A4R,11×17,8.5×14,8.5×11R
	Tri-Fold	A3,A4R,B4,11×17,8.5×14,8.5×11R
Possible no. of sheets to fold	Z-Fold	1 sheet (106 to 256g/m²)
	Bi-Fold	1 sheet (106 to 256g/m²)
	Engineering Fold (Half Z-Fold)	64~74 g/m² A4R, 8.5×11R: 3 sheets, Others: 1 sheet, 91 to 105 g/m²: 1 sheet
	Tri-Fold	75~90 g/m² A4R, 8.5×11R: 2 sheets, Others: 1 sheet, 91 to 105 g/m²: 1 sheet
Max. no. of storage ?80g/m2)	Z-Fold	Cannot be loaded
	Bi-Fold	Not specified
	Engineering Fold (Half Z-Fold)	1 sheet fold: 30 sheets or more, lap fold: not specified
	Tri-Fold	1 sheet fold: 30 sheets or more, lap fold: not specified
Media type	Z-Fold	Plain, Recycled, Preprinted, Bond, Color, Prepunched, Letterhead, Thick, Coated, High Quality, Custom 1 to 8
	Bi-Fold	Plain, Recycled, Preprinted, Bond, Color, Prepunched, Letterhead, Thick, Coated, High Quality, Custom 1 to 8
	Engineering Fold (Half Z-Fold)	Plain, Recycled, Preprinted, Bond, Color, Prepunched, Letterhead, Thick, Coated, High Quality, Custom 1 to 8
	Tri-Fold	Plain, Recycled, Thick, Coated
Dimension (WxDxH)		703.2 × 615 × 1331.7/27.68" × 24.21" × 52.43"
Weight		Approx. 31 kg/Approx. 68.36 lbs

(5-17)Inserter unit (IS-7100)

Items	Specification
Number of Trays	1 tray
Paper size	A3, A4-R, A4, A5-R, A5, B4, B5-R, B5, Folio, SRA3, Ledger, Letter-R, Letter, Legal, Statement, Executive, 12x18", Oficio II, 8K, 16K-R, 16K, ISO B5, Custom (98 x148 to 320 x 457 mm)
Media type	Plain, Thin, Preprinted, Bond, Recycled, Letterhead, Color, Prepunched, Thick, Coated, High Quality, Index, Custom 1 to 8
Dimension (WxDxH)	560 x 615 x 1275 mm / 22.05" x 24.21" x 50.20"
Weight	Approx. 45 kg/Approx. 99.225 lbs.

(5-18)Inner shift tray (JS-7110)

Items	Specification
Number of Trays	1 tray
Maximum Sheets	250 Sheets (80 g/m^2)
Paper Size	A3, A4-R, A4, A5-R, A5, A6-R, B4, B5-R, B5, B6-R, 216×340 mm, SRA3, Ledger, Letter-R, Letter, Legal, Statement-R, Executive, 12×18", Oficio II, Folio, 8K, 16K-R, 16K, ISO B5, Envelope #10, Envelope #9, Envelope #6, Envelope Monarch, Envelope DL, Envelope C5, Envelope C4, Hagaki (Cardstock), Oufuku hagaki (Return postcard), Kakugata 2, Youkei 4, Youkei 2, Nagagata 3, Nagagata 4, Younaga 3, Custom (98 × 148 to 320 × 1,220 mm)
Paper Type	Paper weight: 52 to 300 g/m^2 Media types: Plain, Recycled, Special paper
Dimensions (W × D × H)	17.33" × 15.75" × 5.24" 440 × 400 × 133 mm
Weight	Approx. 3.97 lbs. / Approx. 1.8 kg

(5-19)Speed license

Items	Specification
UG-40	Speed up from 50PPM to 60PPM
UG-41	Speed up from 50PPM to 70PPM
UG-39	Speed up from 40PPM to 50PPM (America specification only)
UG-40	Speed up from 40PPM to 60PPM (America specification only)
UG-41	Speed up from 40PPM to 70PPM (America specification only)

(5-20)FAX System (FAX System 12)

FAX function

Items	Specification
Mutual communication	G3
Adaptable Communication Line	Subscriber telephone line, F-net
Transmission Time	Less than 3 seconds (33600 bps, JBIG, ITU-T A4-R #1 chart)
Transmission Speed	33600/31200/28800/26400/24000/21600/19200/16800/14400/12000/9600/7200/4800/2400 bps
Coding Scheme	JBIG/MMR/MR/MH
Error Correction	ECM
Original Size	Max. width: 297 mm/11", Max. length: 1,600 mm/63"
Number of fax originals to auto feed	Max. 270 sheets (with optional document processor)
Resolution	Scanning method 200x100 dpi Normal (8 dot/mm x 3.85 line/mm) 200x200 dpi Fine (8 dot/mm x 7.7 line/mm) 200x400 dpi Super (Super Fine) (8 dot/mm x 15.4 line/mm) 400x400 dpi Ultra (Ultra Fine) (16 dot/mm x 15.4 line/mm) 600x600 dpi Print: 1,200x1,200 dpi
Gradations	256 shades (Error diffusion)
One Touch Key	1,000 keys
Multi-Station Transmission	Max. 500 destinations (Maximum number of stations: 500, maximum of 100 stations for i-Fax)
Substitute Memory Reception	7,000 sheets or more (when using ITU-T A4 #1)
Image Memory Capacity	Standard memory (170MB) (for FAX transmission/reception)
Report Output	Send result report, FAX RX result report, Activity report, Status page
Optional items	Handsets, Multi port, Internet FAX kit

Network FAX functions

Items	Specification
Hardware	IBM PC-AT compatible computer
Interface	10 BASE-T, 100 BASE-TX, 1000 BASE-T
Operating system	Windows 7, Windows 8.1, Windows 10, Windows Server 2008/R2, Windows Server 2012/R2, Windows Server 2016
Transmission Resolution	Ultra fine (400x400dpi), Fine (200x200dpi), Normal (100x200dpi), 600x600dpi
Document Size	Letter, Legal, Ledger (11x17), Statement, A3, A4, A5, Folio, B4, B5 (JIS)
Scheduled job	Time setting by Network FAX driver (within 24 hours, 1 minute increments)
Transmit and Print	Fax transmission and print out at the machine is available
Broadcast Transmission	Max. 500 destinations (Maximum number of stations: 500, maximum of 100 stations for i-Fax)
User Login/Job Accounting	In case that “User Login” is set in main unit, Login User Name and Password have to be registered by the Network FAX Driver setting. In case that “Job Accounting” is set in main unit, Account ID has to be registered by the Network FAX Driver setting.
Cover Page	Network FAX driver allows to select cover page format and to create templates.

1 - 2 Part Names

(1)Main unit appearance

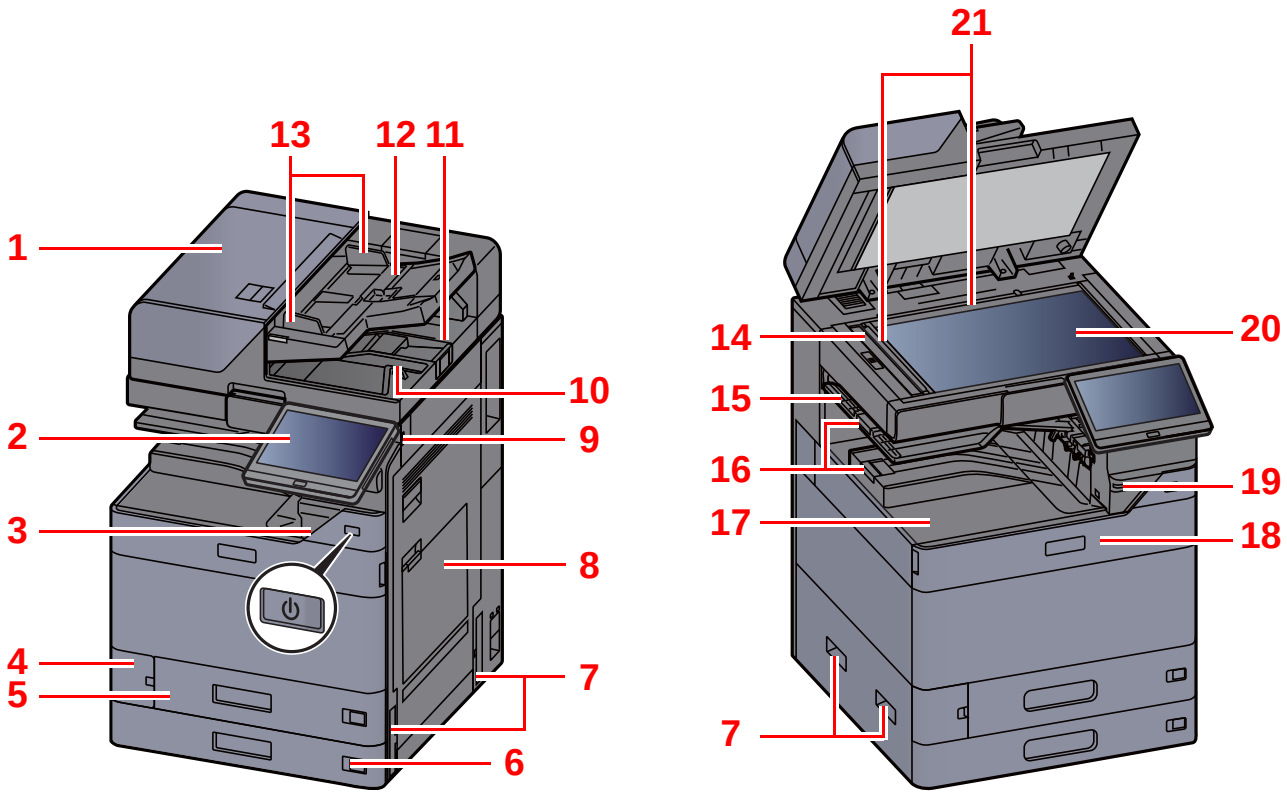

1 Document Processor
2 Operation Panel
3 Power Switch
4 Waste Toner Box Cover
5 Cassette 1
6 Cassette 2
7 Handles
8 Multi Purpose Tray
9 USB Drive Slot
10 Copy Original exit Table
11 Copy Original Stopper
12 Copy Original Table
13 Copy Original Width Guides
14 Slit Glass
15 Job Separator Tray
16 Paper Stopper
17 Inner Tray
18 Front Cover
19 Motion sensor
20 Platen
21 Copy Original Size Indicator Plates

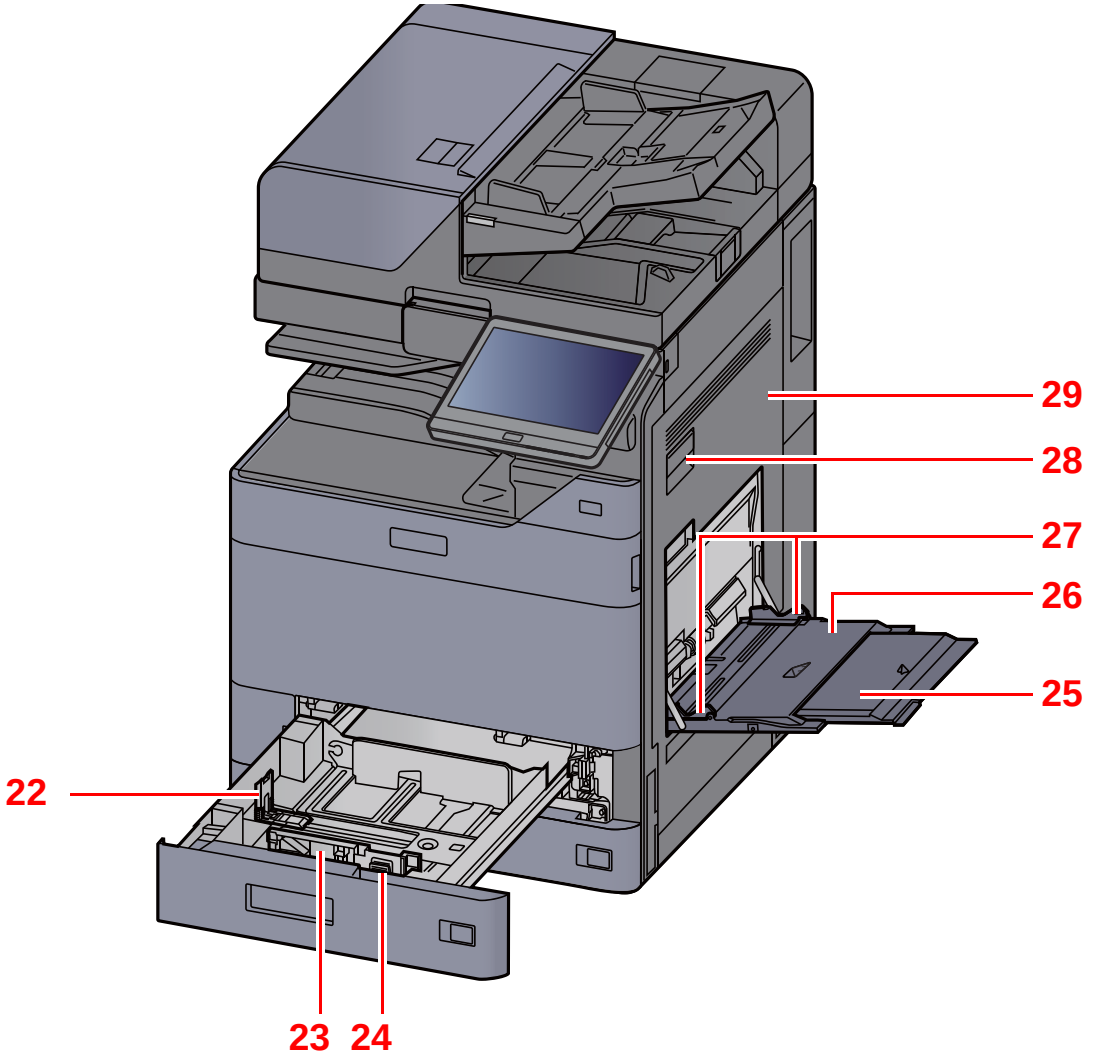

22 Paper Length Guide
23 Paper Width Guides
24 Paper Width Adjusting Tab
25 Support Tray Section of the Multi Purpose Tray
26 Multi Purpose Tray
27 Paper Width Guides for Multi Purpose Tray
28 Right Cover 1 Lever
29 Right Cover 1

(2)Connectors/Interior

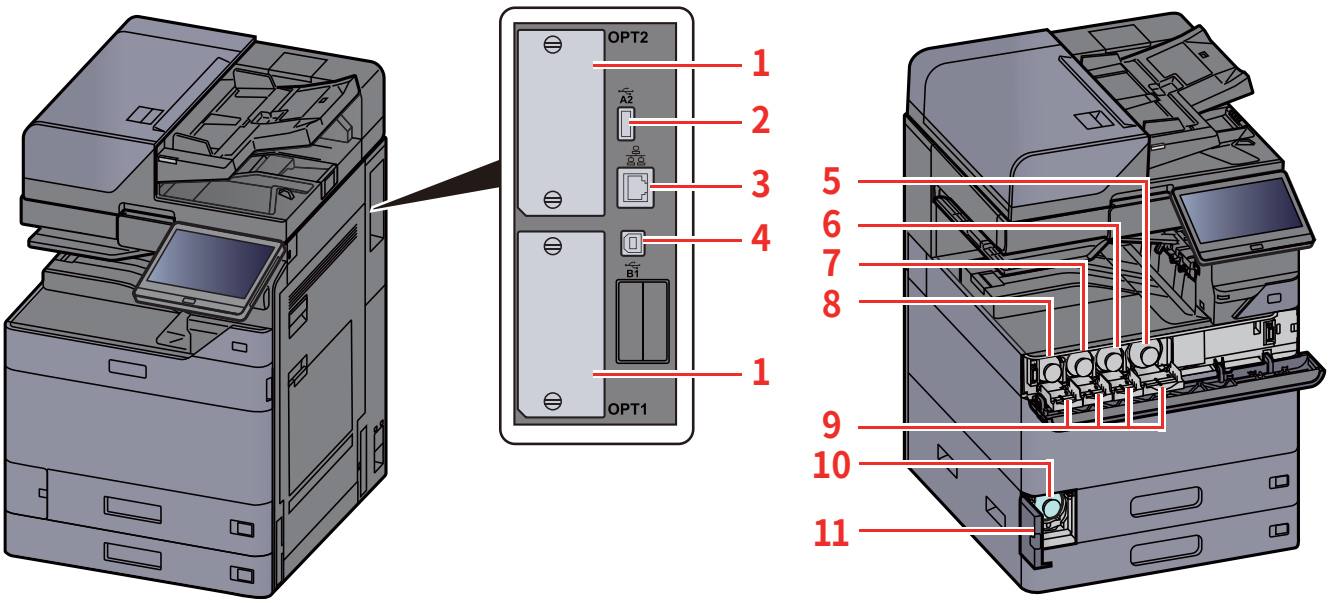

1 Optional Interface Slot
2 USB port
3 Network Interface Connector
4 USB Interface Connector
5 Toner Container (Black)
6 Toner Container (Magenta)
7 Toner Container (Cyan)
8 Toner Container (Yellow)
9 Toner Container Cover
10 Waste Toner Box
11 Waste Toner Box Cover

(3)Optional Equipments Attached

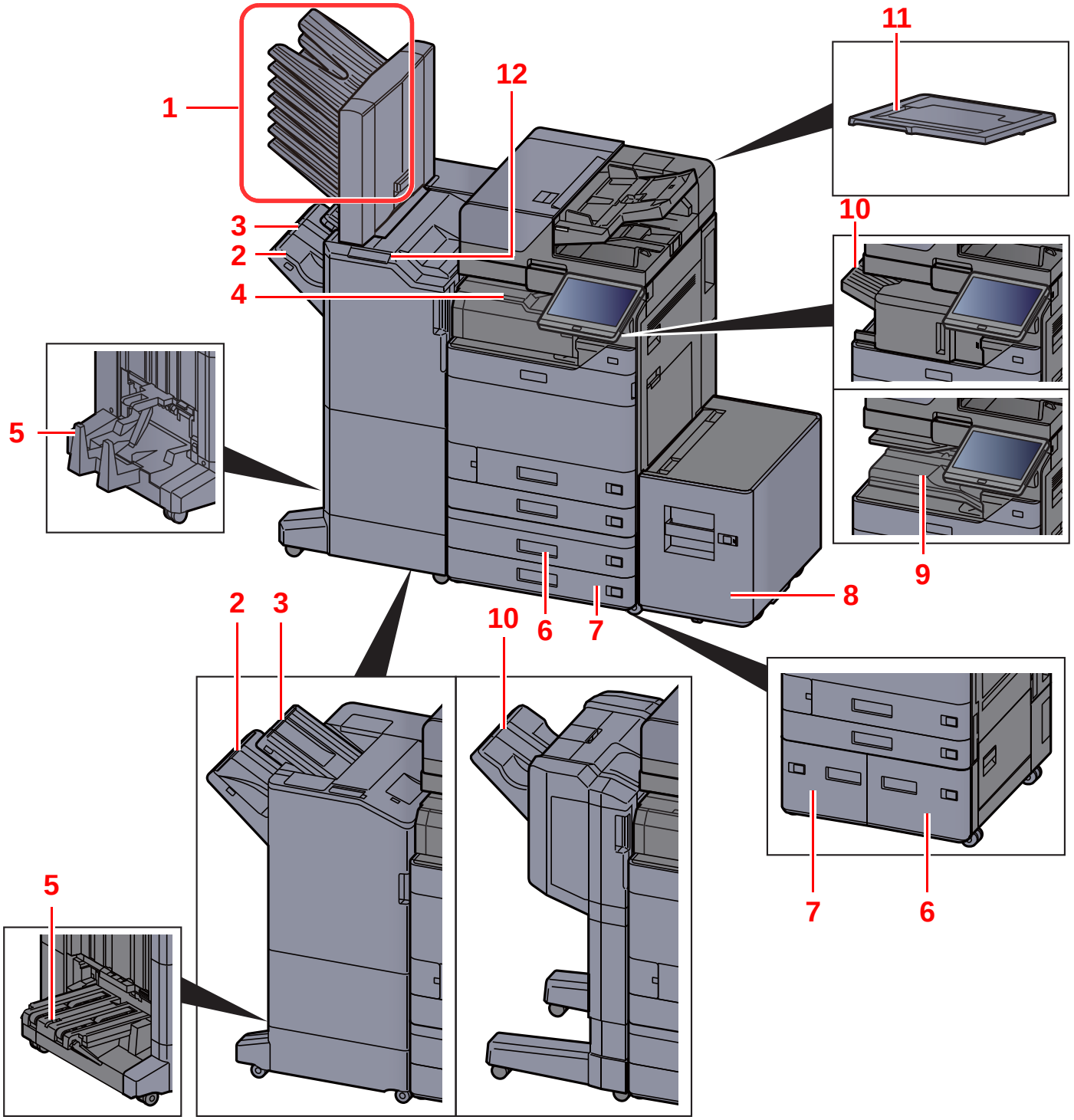

1 Tray 1 to 7 (Tray 1 is the top tray)
2 Tray A
3 Tray B
4 Job Separator Tray
5 Folding Tray
6 Cassette 3
7 Cassette 4
8 Cassette 5
9 Inner shift tray
10 Finisher tray
11 Platen Cover
12 Operation panel for Finisher

(4)FAX System

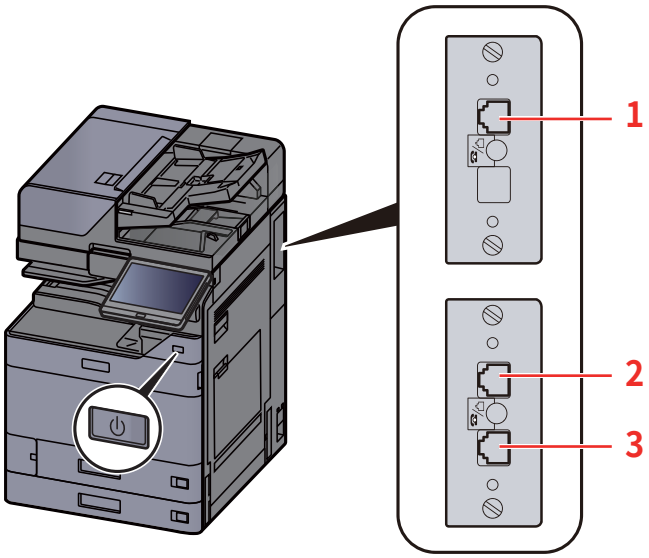

1 LINE Connector (L2)

If installing 2 FAX kits, 2 ports are available.

Connect the modular cords for telephone line.

2 LINE Connector (L1)

Connect the modular cords for telephone line.

This connector is port 1.

3 TEL Connector (T1)

In case of using an optional handset or available telephone, connect it here.

(5)Operation Panel Keys

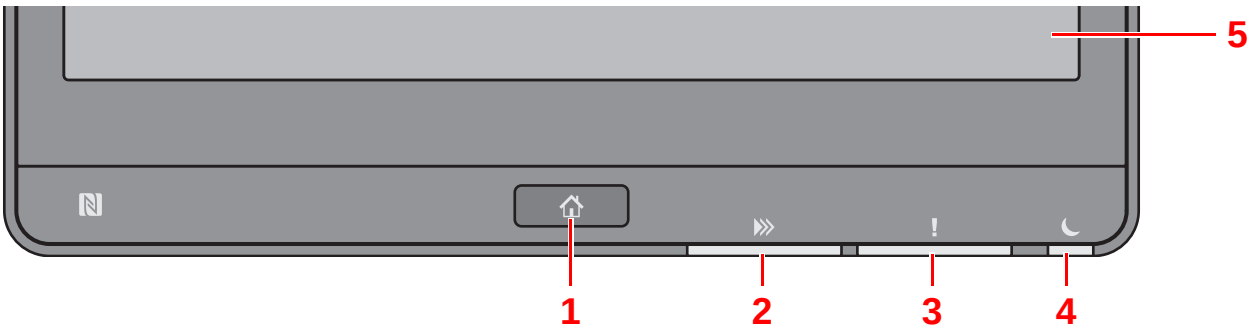

No	Name	Symbol	Specification
1	[Home] key		Displays the Home screen.
2	[Data] lamp		Blink when printing, sending/receiving data or accessing to HDD/SSD And lit when FAX (Send) is waiting for timer.
3	[Attention] indicator:	!	Lights or blinks when an error occurs and a job is stopped.
4	[Energy Saver] key		Puts the machine into Sleep Mode. Recovers from Sleep Mode.
5	Touch Screen		Touch icons and make settings.

Touch Screen Layout

Basic function keys are available in the bottom and right side of the screen.

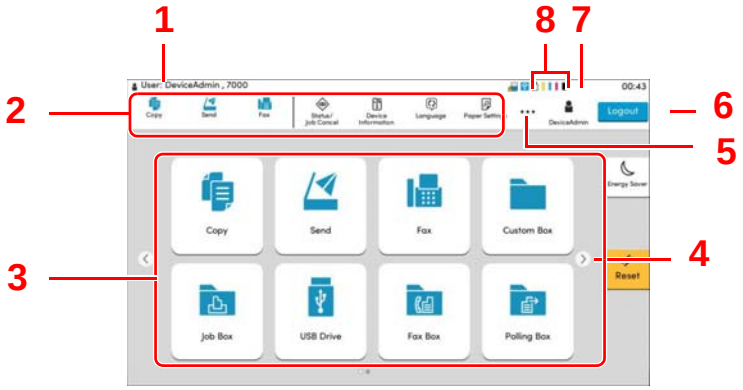

* The appearance may differ from your actual screen, depending on your configuration and option settings.

No.	Item	Description
1	Status Area	Displays the messages and status icons for the current status. Displays the logged-in user name when user login administration is enabled.
2	Task bar	Displays task icons. If an error occurs, the **[Status/Job Cancel]** icon will show "!". Once the error clears, the display will return to normal.
3	Desktop	Displays the application icons. Icons that are not displayed on the first page will appear by changing the page.
4	Screen-switching keys	Use these buttons to switch between desktop pages. **NOTE** It is also possible to use swiping to switch between displays.
5	**[...]**	Displays every task icons including the icons displayed in an task bar area in a popover.
6	**[Login]** / **[Logout]**	Logs in or logs out when user login administration is enabled.
7	Remaining amount of toner	Displays the remaining amount of toner. Select this icon to display details of the remaining amount of toner in a popover.

No.	Item	Description
8	Sub status icons	Displays the icons that indicate the status of the machine. 5 icons can be displayed. Select this area to display the icon information in a popover.
	Status Icon (Wi-Fi)	The icon "" is displayed when Wi-Fi is connected. When Wi-Fi is not connected, "" is displayed.
	Status Icon (Security level: Low)	"" is displayed when the security level is set at [Low].
	Status Icon (Remote operation)	"" is displayed when using the remote operation.
	Status Icon (Security information)	When you activate the Data Encryption/Overwrite Function, the Security information icon will be displayed. "" is displayed while the data is overwriting. "" is displayed if remaining data is in HDD. "" is displayed if remaining data is not in HDD.
	Status Icon (FAX Memory RX Box capacity)	"" is displayed when the capacity of the FAX Memory RX Box is 10% or less.
	Status Icon (USB drive)	"" is displayed when a USB drive is connected to this machine. Tapping the USB drive icon and selecting **[Remove USB]** allows you to safely remove the USB drive.

1 - 3 Enhance Configuration

The following enhancements are available for this model.

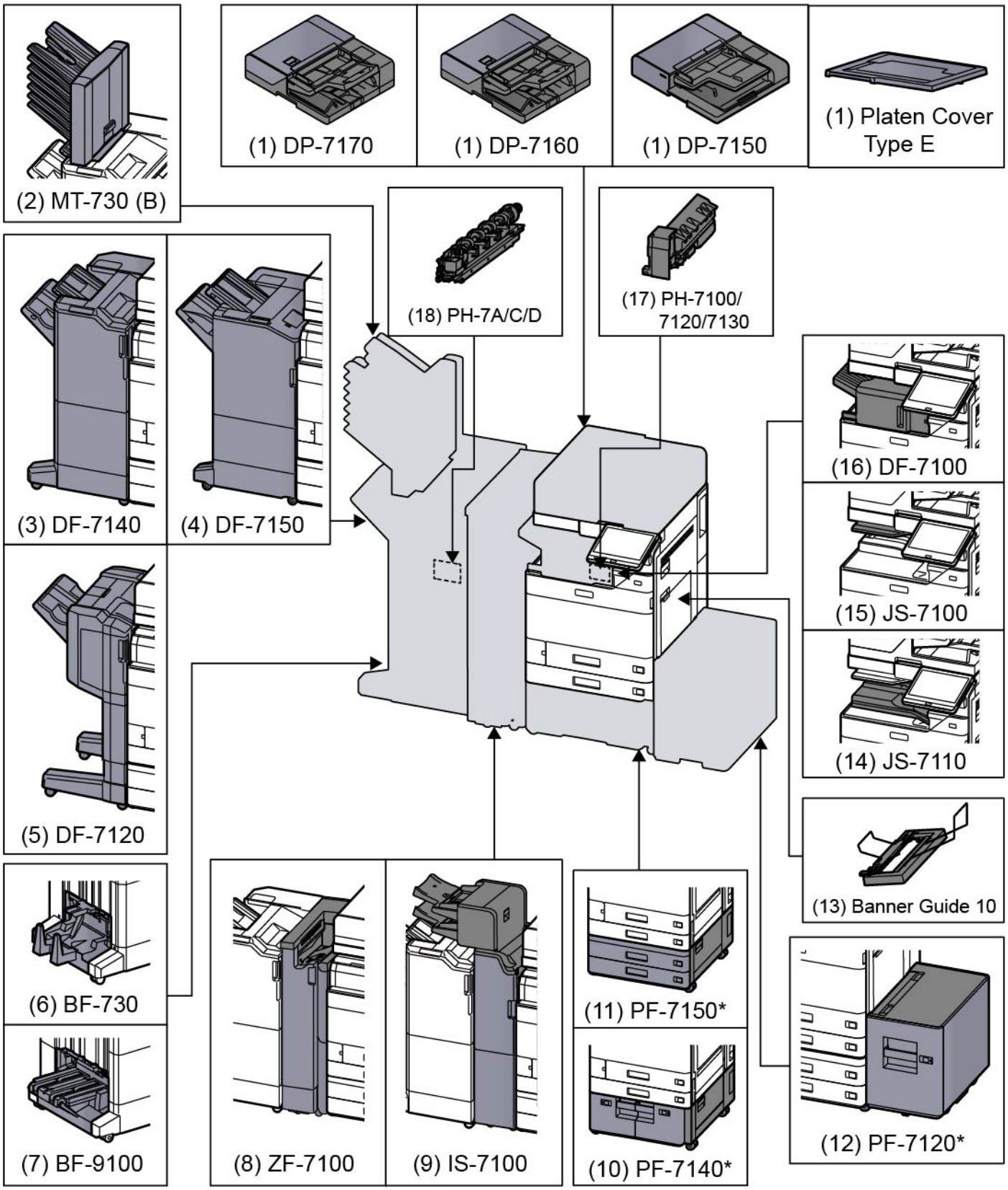

* If the following option is installed, toppling prevention kit must be installed: PF-7100, PF-7110, PF-7120

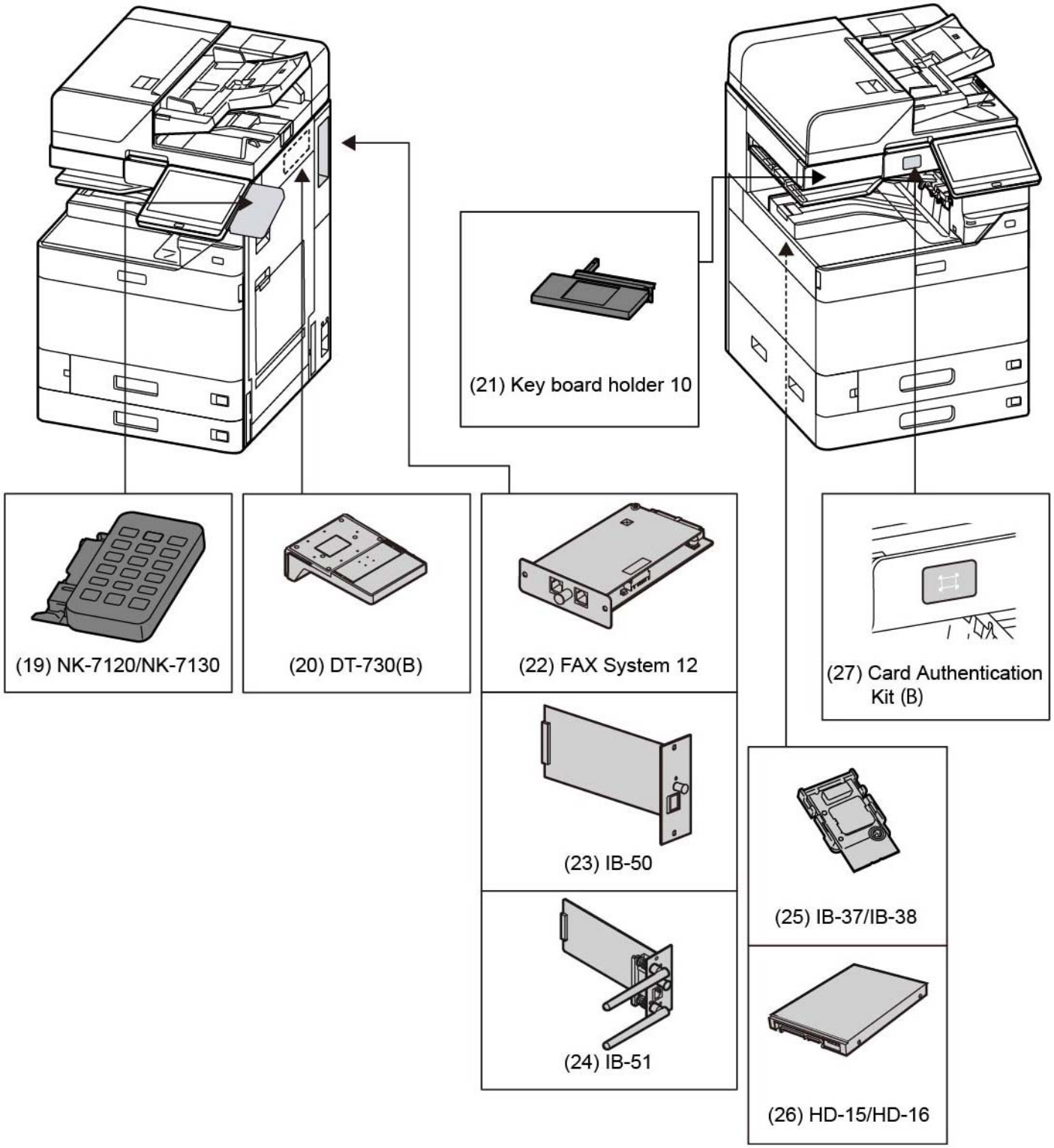

Optional Software	
(28) Internet FAX Kit (A)	(32) Data security kit 10
(29) UG-33	(33) USB Keyboard
(30) UG-34	(34) Speed license
(31) Scan extension kit (A)	

(1)DP-7170 "Document Processor (Dual Scan with Skewed, Multifeed and Staple Detection)"/ DP-7160 "Document Processor (Dual Scan)"/DP-7150 "Document Processor (Reverse Automatic)"/PLATEN COVER TYPE E "Original Cover"

Automatically scans originals. Also you can perform duplex copying and split copying.

For document processor operation, refer to the following:

When the document processor is not used, please use the PLATEN COVER TYPE E.

(2)MT-730 (B) "Mailbox"

Makes it easy to sort output into separate trays. Installing this option adds 7 output trays. When multiple computer users share the printer, each user can print to a specified tray. Installs on the 4,000-sheet Finisher.

NOTE

To deliver output to the mail box, change the Paper Output selection on the operation panel or in the printer driver, or change in the default settings.

(3)DF-7140 "4,000-sheet Finisher"

This is a large-capacity 4,000-sheet Finisher capable of holding large print runs and of separating and offsetting multiple copies of a printout into individual copies. It can also staple or hole-punch (optional) the offset printouts.

(4)DF-7150 "100-sheet Staple Finisher"

This is a large-capacity 4,000-sheet Finisher capable of holding large print runs and of separating and offsetting multiple copies of a printout into individual copies. It can also staple or hole-punch (optional) the offset printouts.

(5)DF-7120 "1,000-sheet Finisher"

This is a document finisher capable of holding large print runs and of separating and offsetting multiple copies of a printout into individual copies. It can also staple or hole-punch (optional) the offset printouts.

(6)BF-730 "Folding Unit"

Folds printed output at the center or in tri-fold to enable the creation of simple booklets. Installs on the 4,000-sheet Finisher.

(7)BF-9100 "Folding Unit"

Folds printed output at the center or in tri-fold to enable the creation of simple booklets. Installs on the 100-sheet Staple Finisher.

(8)ZF-7100 "Z-Fold Unit" (Option for 60ppm/70ppm model)

This device can fold the output paper into a Z shape. The device can be installed when a 4,000-sheet Finisher or a 100-sheet Staple Finisher is installed. It cannot be used when an Inserter is installed.

(9)IS-7100 "Inserter" (Option for 60ppm/70ppm model)

This device can automatically insert index tab paper or previously printed-on paper. It can be installed when a 4,000-sheet Finisher or 100-sheet Staple Finisher is installed. It cannot be used when a Z-Fold Unit is installed.

(10)PF-7140 "Paper Feeder (500-sheet×2)"

Two additional cassettes identical to the machine’s cassette can be installed in the machine. Paper capacity and loading method are the same as the standard cassettes.

(11)PF-7150 "Large Capacity Feeder (1,500-sheet×2)"

In addition to the machine’s cassettes, you can also install an optional large capacity feeder (1,500-sheet×2) capable of holding up to 3,000 sheets of A4, B5 or Letter paper.

(12)PF-7120 "Side Feeder (3,000-sheet)"

In addition to the machine’s cassettes, you can also install an optional side feeder (3,000-sheet) capable of holding up to 3,000 sheets of A4, B5 or Letter paper.

(13)Banner Guide 10 "Banner Tray"

This tray enables continuous feeding of banner paper. Up to 10 sheets of banner paper can be loaded. To attach the tray and load paper, refer to the following:

(14)JS-7110 "Inner Shift Tray"

This device can shift and sort each set of output.

(15)JS-7100 "Job Separator"

Separate paper according to output tray for easier sorting. Specify as the output tray for copy or print jobs. Or, specify as the default output tray for printing from the copy or Document Box screen, printing from the PC, and printing of the received fax data.

NOTE

To ensure that paper is delivered to the Job Separator, select the output destination or change the default setting.

(16)DF-7100 "Inner Finisher" (Option for 40ppm/50ppm/60ppm model)

This is a document finisher capable of holding large print runs and of separating and offsetting multiple copies of a printout into individual copies. It can also staple the offset printouts.

(17)PH-7100, PH-7120, PH-7130 "Punch Unit"

Attaches to the Inner Finisher and is used to punch holes.

(18)PH-7A, PH-7C, PH-7D "Punch Unit"

Attaches to the Document Finisher and is used to punch holes.

(19)NK-7120/NK-7130 "Optional Numeric Keypad"

The numeric keypad is added to the operation panel. If the optional numeric keypad is installed, numeric keys do not appear on the touch panel.

(20)DT-730 (B) "Document Table"

Place original or other documents when using the machine.

(21)Keyboard Holder 10 "Keyboard Holder"

A USB keyboard connected to the machine can be placed here.

(22)FAX System 12 "FAX Kit"

By installing the FAX kit, fax send/receive is enabled. Also, it is possible to use it as a network fax, by using it with a computer. When two FAX kits are installed, the units can be connected to two different telephone lines which will enable quicker message transmission to a number of recipients. If one of the lines is dedicated to receiving, the busy line time can be reduced.

(23)IB-50 "Network Interface Kit"

The Network Interface Kit provides a high-speed connection for the Gigabit-per-second interface. This kit supports traditional protocols such as AppleTalk, Netware and so on.

It also supports only the least functions in the standard utilities.

(24)IB-51 "Wireless Network Interface Kit"

This is a wireless LAN interface card which supports the wireless LAN specifications IEEE802.11n (Max 300 Mbps) and 11 g/b. This supports traditional protocols such as AppleTalk, Netware and so on.

It also supports only the least functions in the standard utilities.

The IB-51 Steup utility supports Windows OS and Mac OS X.

(25)IB-37/IB-38 "Wireless Network Interface Kit"

This is a wireless LAN interface card which supports the wireless LAN specifications IEEE802.11n (max. 150 Mbps) and IEEE802.11 g/b/ac. In addition, network printing is possible without using the wireless LAN router because Wi-Fi Direct is supported.

(26)HD-15/HD-16 "Hard Disk"

With Hard Disk installed in the machine, received data can be rasterized and stored on this Hard Disk. This enables high-speed printing of multiple copies using an electric sort function. Also, you can use the Document Box functions. HD-15 is standard in South America and North America.

(27)Card Authentication Kit(B) "Card Authentication Kit"

User login administration can be performed using ID cards. To do so, it is necessary to register ID card information on the previously registered local user list. For more information about how to register this information, (10) ID card reader (page 2-77):

(28)Internet FAX Kit(A) "Internet FAX Kit"

Activating the Internet FAX Kit sends and receives faxes via the Internet without using a phone line. It can only be added when the FAX Kit is installed.

(29)UG-33 "ThinPrint Option"

This application allows print data to be printed directly without a print driver.

(30)UG-34 "Emulation Upgrade Kit"

Enables emulation whereby the machine operates using commands for other printers. Installing this option enables IBM Proprinter, Line Printer, and EPSON LQ-850 emulation.

(31)Scan Extension Kit(A) "OCR Scan Activation Kit"

This option enables the use of the OCR Text Recognition function in the applications of the machine.

(32)Data Security Kit 10 "Data Security Kit"

If you use IPsec protocol (required by the U.S. Department of Defense), you will be able to perform encryption using the FIPS140-2 compliant encryption module.

(33)USB Keyboard "USB Keyboard"

A USB keyboard can be used to enter information into the text fields on the operation panel. A special mount is also available to install the keyboard on the machine. Please contact your dealer or service representative for information on keyboards that are compatible with your machine before you purchase one.

(34)Speed license

When installing the main unit, input the license key that has purchased beforehand to increase the print speed.

In case of not inputting the license key, the print speed is the default setting speed.

2 Installation

2 - 1 Environment

Installation environment

1. Temperature: 50 to 90.5°F (10 to 32.5°C) (Humidity should be 70% or less when the temperature is 90.5°F (32.5°C).)
2. Humidity: 10 to 80% (Temperature should be 86°F (30°C) or less when humidity is 80%.)
3. Power requirements:

AC110 V	60Hz	15 A or more
AC120 V	60Hz	12 A or more
AC 220 to 240 V	50Hz	7.2 A or more

4. Frequency fluctuation: 50Hz+/-2% or 60Hz+/-2%

Installation location

The operative environmental conditions are as follows:

Environmental conditions may affect the image quality. It is recommended to use the machine as follows: Humidity: 36 to 65% Temperature: 60.8 to 80.6°F or less (16 to 27°C).

Avoid the following locations.

- Locations where the sunlight is hit directly such as the window.
- Locations with vibrations
- Locations with rapid temperature fluctuations
- Locations with where hot or cold air is hit directly.
- Poorly ventilated locations

The floor material may be damaged by moving this product in case of a delicate material.

During operation, ozone is released, but its amount does not affects one's health.

If, however, the machine is used over a long period of time in a poorly ventilated room or when making an extremely large number of copies, the smell may become unpleasant. In order to keep a comfortable environment, ventilation of the room has to be considered.

Installation space

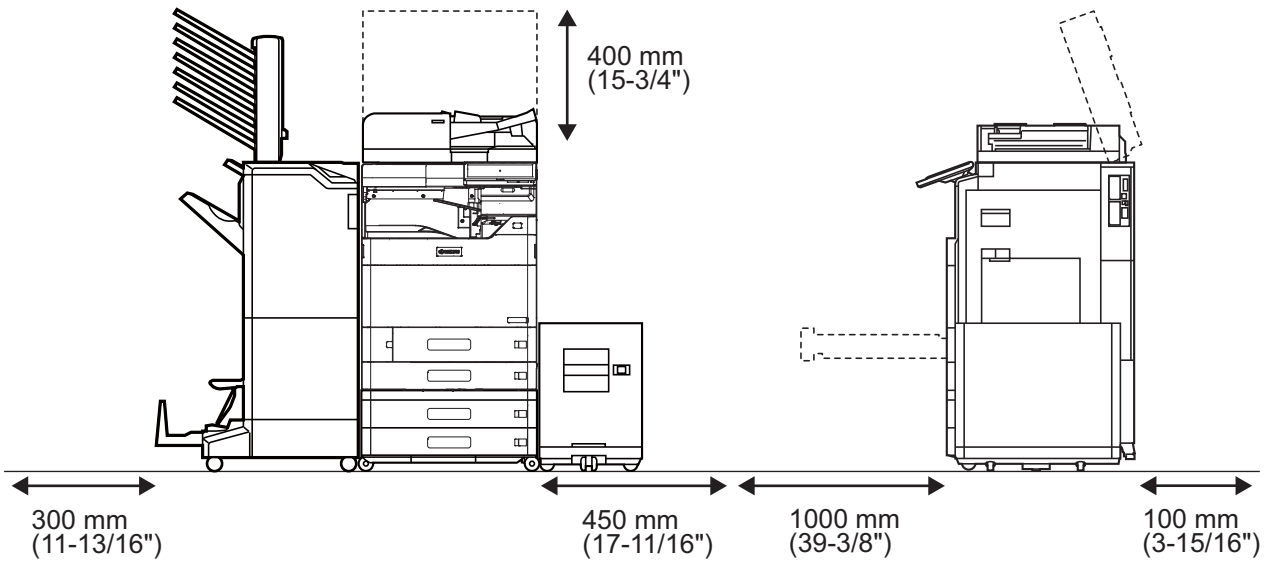

2 - 2 Installing the main unit

Installation procedures

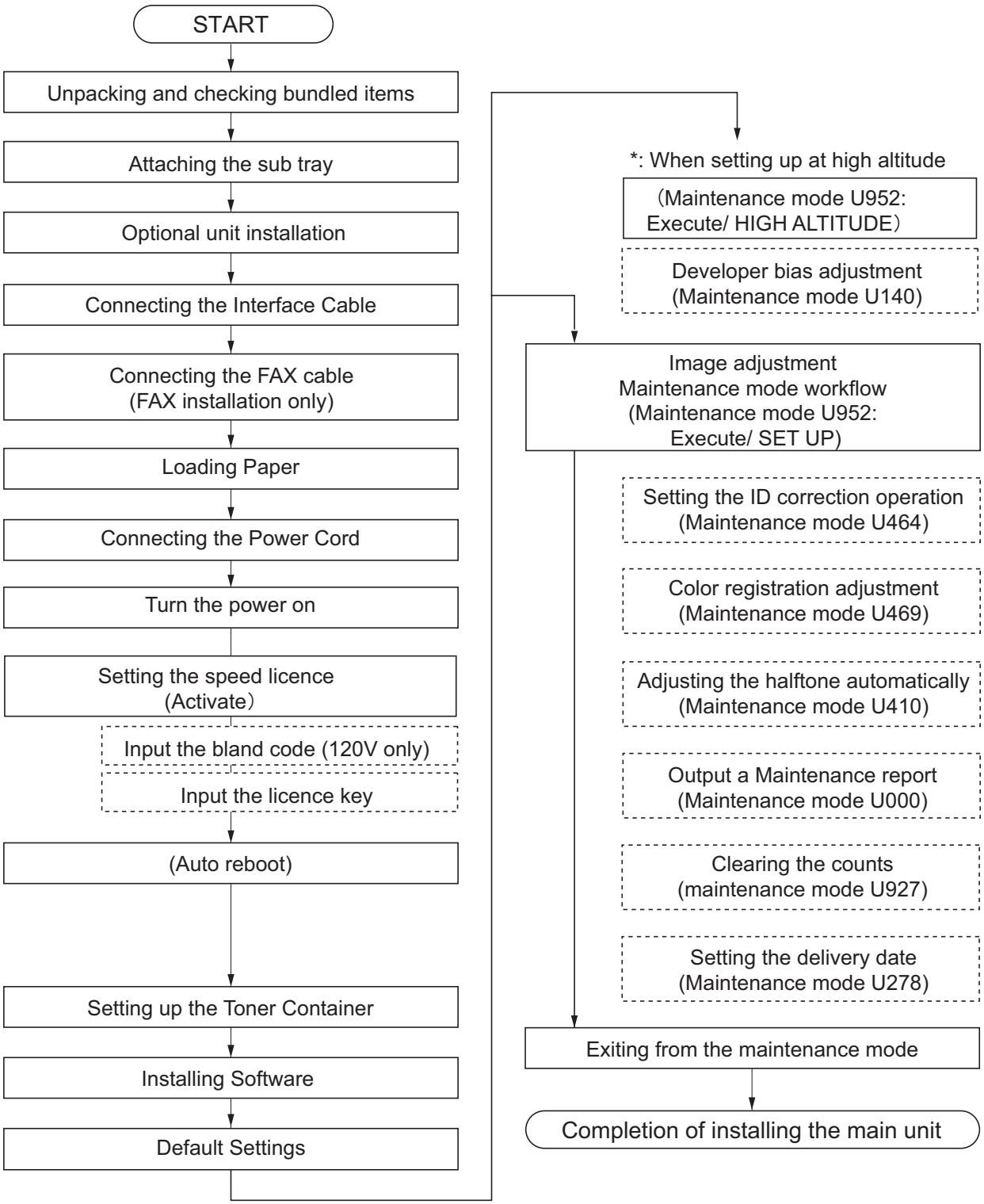

*: Initial setting time: approx. 2 minutes

Also, do not execute the maintenance mode during the initial setting.

(1)Unpacking and checking bundled items

Take out the main unit and accessories from the packing case.

Remove tapes and packing materials from the main unit.

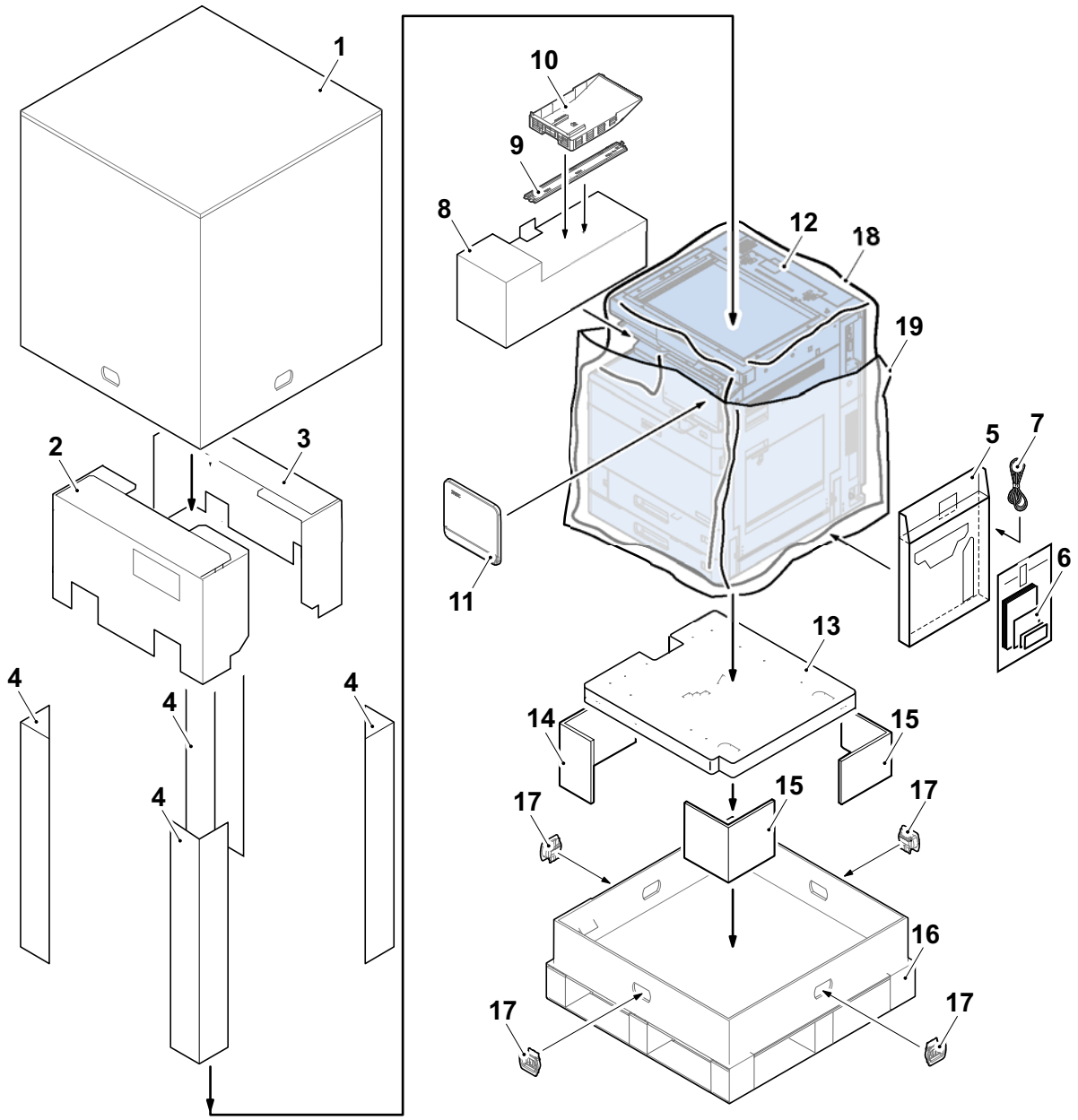

1	Outer case	8	Exit spacer	15	Right bottom pad
2	Front upper pad	9	Right lower cover	16	Skid
3	Rear upper pad	10	Inner Tray	17	Hinge
4	Side stay	11	Operation cover		
5	Accessories box	12	Main unit		
6	Size label	13	Bottom case		
7	Power cord	14	Left bottom pad		

CAUTION

Install the main unit on a level surface.

(2)Notes on main unit transportation

When transporting the main unit, lift the left and right handle of the lower part of the main unit (as marked by red circles) with four people as shown in the figure.

Do not hold the operation panel because it will cause damage.

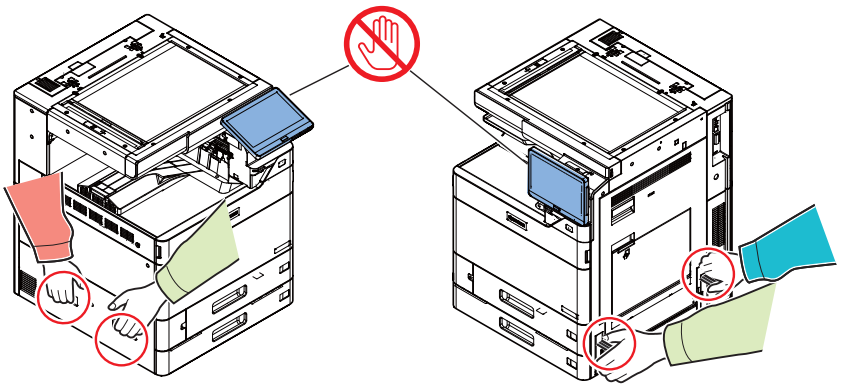

(3)Release the lock of the scanner mirror frame

1 Release the lock of the scanner mirror frame

1 Raise the triangle mark side of the optical lock cover (b) with a flat-blade screwdriver (a) and slide it to the direction of the arrow to remove it.

2 Put the optical lock cover (b) into the aperture of the hook (c) to fit in the direction of the arrow.

- C3100 error occurs when miss releasing the lock.

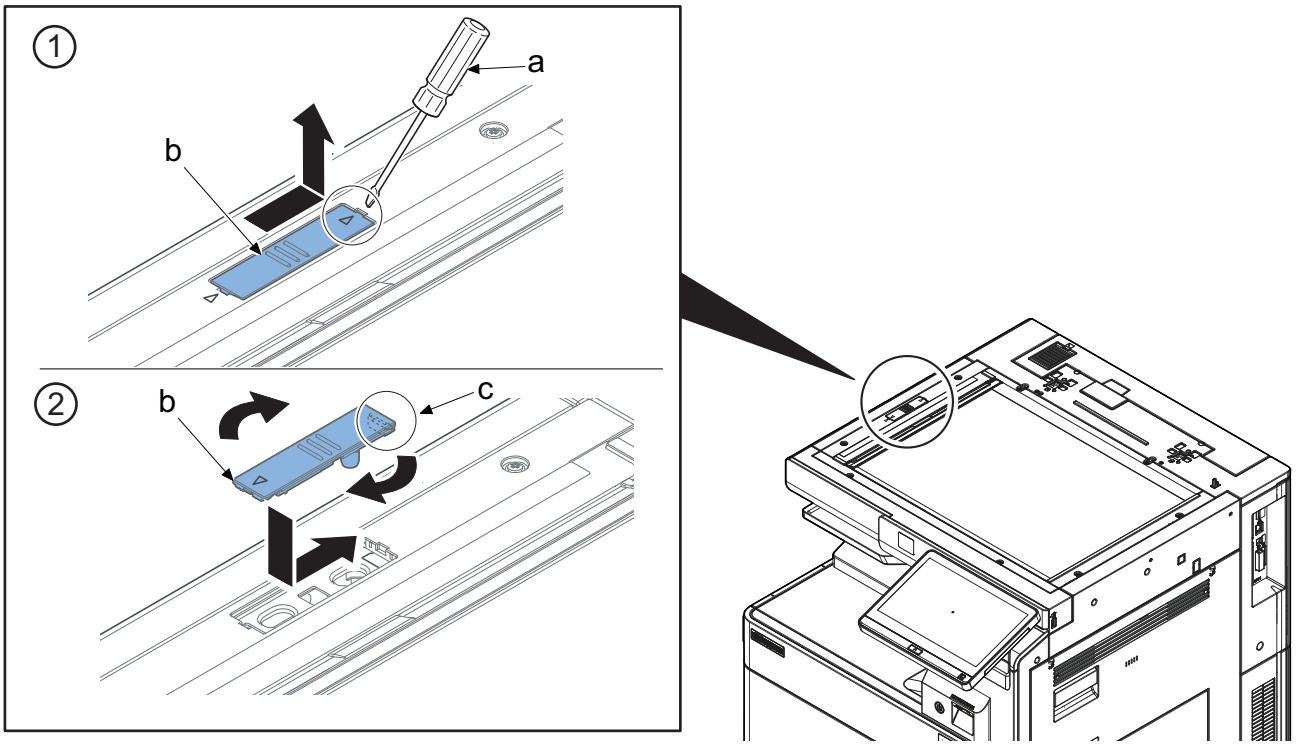

(4)Release lift plate stopper

1 Pull out cassette 1 and 2. Remove the lift plate stopper from each cassette and attach it to the storage location.

- When moving the machine, attach the lift plate stopper to original position.

Cassette 1

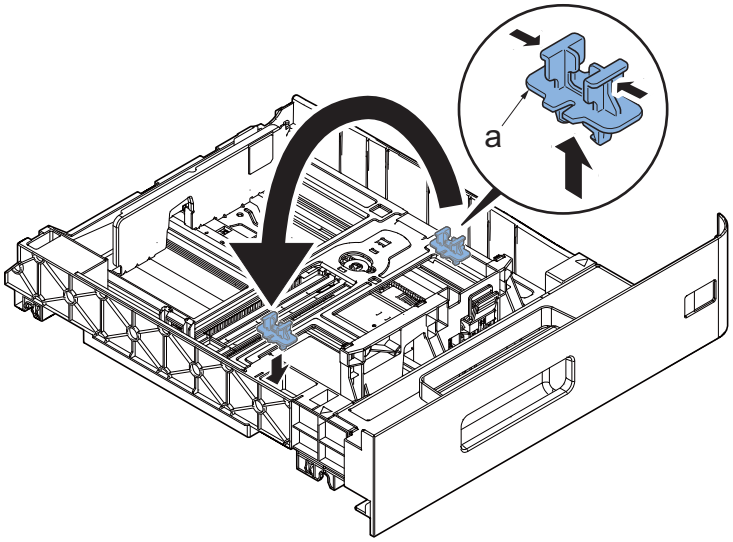

Cassette 2

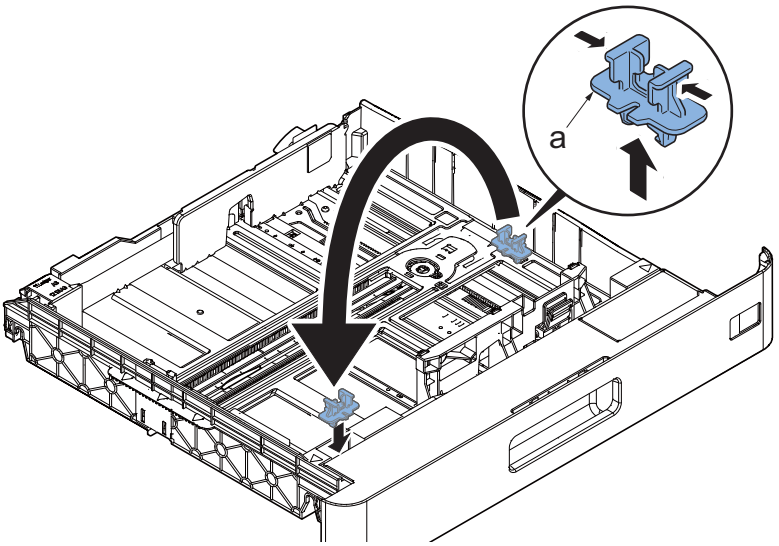

(5)Attaching the sub tray

Attach the bundled sub tray to the inner tray.

*: The sub tray is not necessary when installing the DF-7100 (Inner finisher) or the JS-7110 (Inner shift tray).

*: The Sub Tray is not necessary when installing the AK-7110 (Attachment kit) for DF-7110 (4,000-sheets Finisher), DF-7120 (1,000-sheets Finisher) or DF-7130 (100-sheets staple finisher).

1 Slide the sub tray (a) and insert two protrusions (b) into two apertures (c) on the inner tray.

2 Insert the rib (d) into the aperture (e) of the inner tray and push it in until it locks.

- Check if it does not come off by lifting up the sub tray (a).

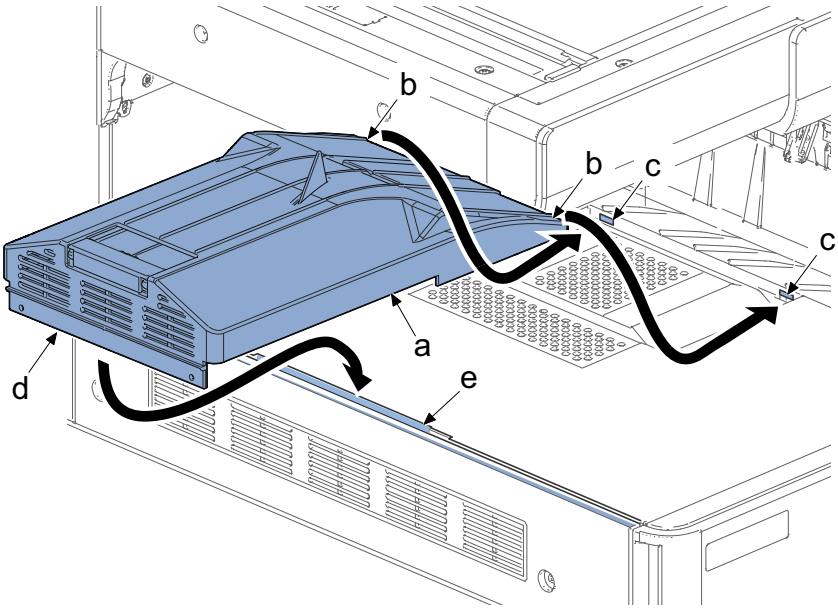

Attach the bundled Right lower cover as shown below when the optional feeder is not installed.

1 Insert two protrusions (b) on the lower rear cover (a) into the holes at the machine front side.

2 Insert the hook (c) to fix it.

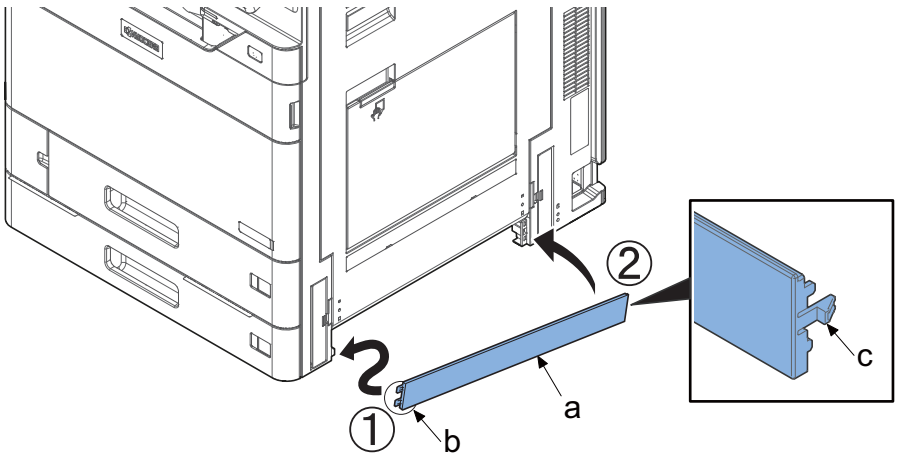

(6)Connecting the Interface Cable

Connection Environment	Available Function	Required Cable
Connect a LAN cable to the main unit	Printer/Scanner/ Network FAX*1	LAN Cable (10 Base-T, 100 Base-TX, 1000 Base-T)
Connect a USB cable to the main unit	Printer	USB 3.0 adaptable cable (Super-Speed USB compatible, Max. 5.0 m long)

*1: This can be used for installing optional Fax kit.

IMPORTANT

It can be cause of failure not to use USB 3.0 adaptable cable.

In case of the LAN connection

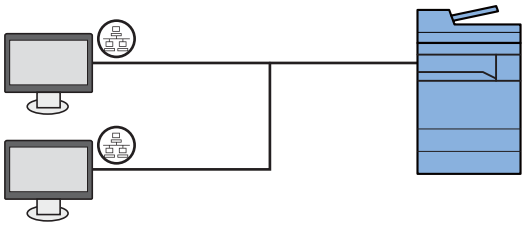

1 Connect the LAN cable to the network interface connector.

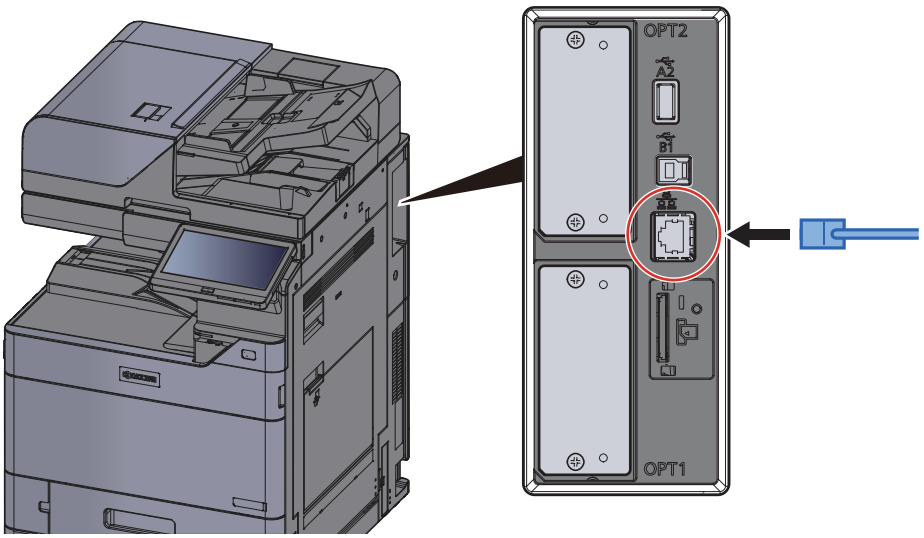

2 Connect the other end of the cable to PC or hub.

In case of the USB connection

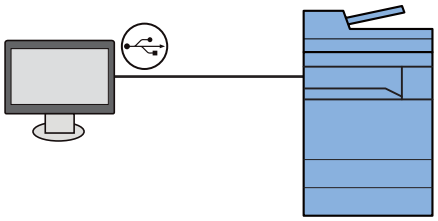

1 Connect the USB cable to the USB interface located on the right side of the main unit.

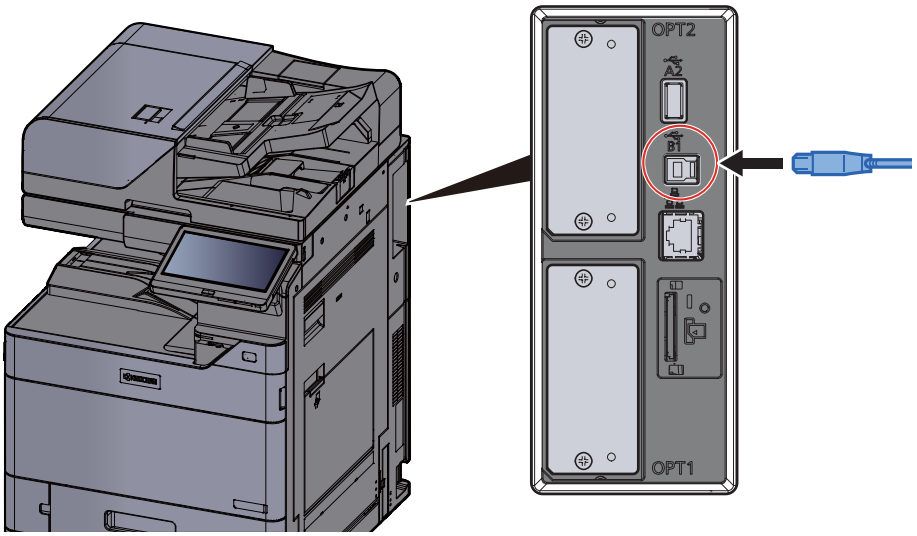

2 Connect the other end of the cable to PC.

(7)Connecting the FAX cable (FAX installation only)

FAX connection example

In case of the regular telephone line

A. Modular jack

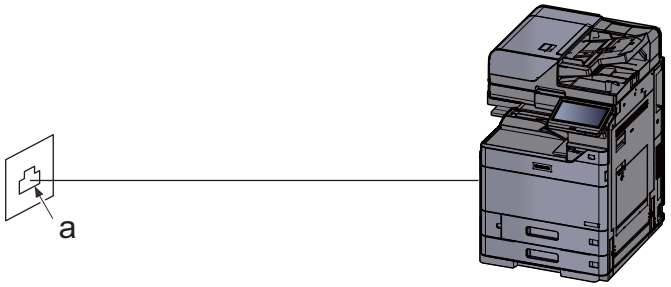

ADSL

Connect the LINE connector of the main unit and the PHONE port of the splitter.

a. Modular jack

b. ADSL modem

c. Splitter (PHONE port)

d. PC

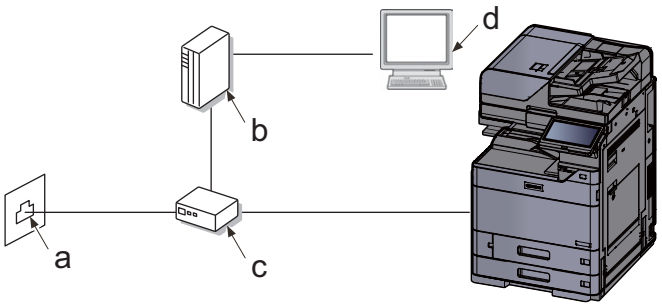

ISDN

Connect the LINE connector of the main unit and the analog port of the terminal adapter.

a. Modular jack

b. Terminal adapter
(Analog port)

c. PC

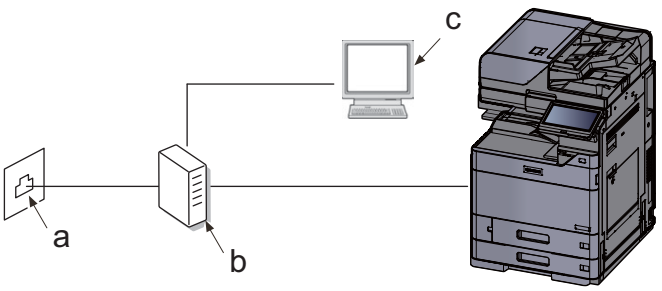

Modular cord connection

Connect a modular cord to the LINE connector of the main unit.
When using a commercially available telephone set, connect a modular cord to the TEL connector of the main unit.

a. Modular jack

b. Modular jack (Phone)

c: Commercially available telephone

d. Modular jack (line2) *1

*1 when two FAX kits are installed

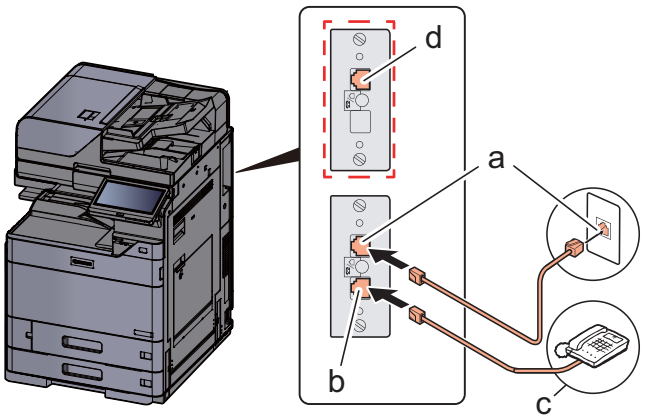

(8)Loading Paper

(8-1)Precaution for Loading Paper

Before loading paper to the cassette, fan the paper from a new package to separate them following the procedures below.

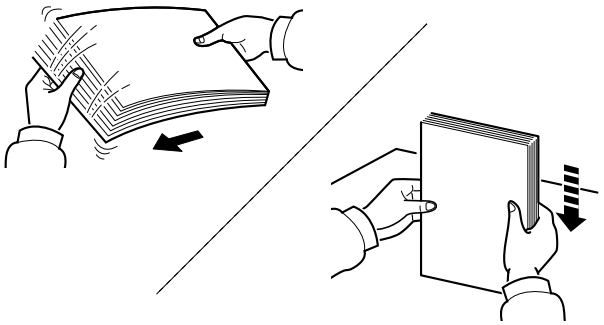

Fan the paper and align the edges at the flat place.

In addition, note the following points.

- Bending or curling causes paper jam.
- Storing paper under high temperature and high humidity after opening the package, gets trouble because of absorbing moisture. After setting paper in the cassette, seal the rest of the paper in the paper storage bag. Also, seal the paper remaining on the MP tray in the paper storage bag.
- Setting paper in the cassette for a long period, heat from the cassette heater may spoil the paper.
- If the machine will not be used for a prolonged period, protect all paper from humidity by removing it from the cassettes and sealing it in the paper storage bag.

IMPORTANT

If you reuse paper already used for printing, remove staples or clips. Do not use paper with a staple or clip. This may cause poor image quality or failures.

(8-2)Select cassette

Select cassette as paper size or type.

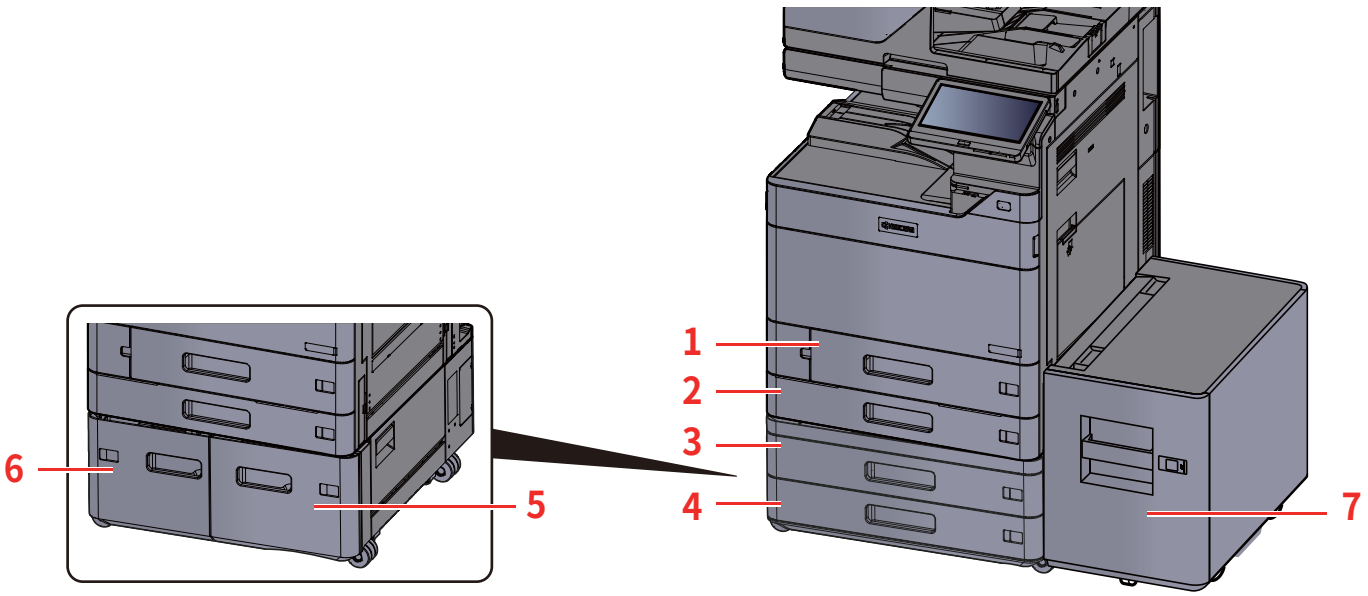

Number	Name	Paper size	Paper type	Capacity	Reference destination
1	Cassette 1	A4-R, A4, A5-R. A5, A6-R, B5-R, B5, B6-R, Letter-R, Letter, Legal, Statement-R, Executive, Oficio II, Folio, 16K-R, 16K, ISO B5, Envelope #10, Envelope #9, Envelope #6, Envelope Monarch, Envelope DL, Envelope C5, Hagaki, Ofukuhagaki, Kakugata 2 go, Yokei 4 go, Yokei 2 go, Chokei 3 go, Custom 1 to 4	Plain, Vellum, Recycle, Preprint, Bond, Hagaki, Color, Punched, Letterhead, Thick, Envelope, High Quality, Custom 1 to 8	500 sheets (80 g/m^2)	page 2-14
2	Cassette 2	A3, A4-R, A4, A5-R, A5, A6-R, B4, B5-R, B5, B6-R, 216×340 mm, SRA3, Ledger, Letter-R, Letter, Legal, Statement-R, Executive, 12×18", Oficio II, Folio, 8K, 16K-R, 16K, ISO B5, Envelope #10, Envelope #9, Envelope #6, Envelope Monarch, Envelope DL, Envelope C5, Envelope C4, Hagaki, Ofukuhagaki, Kakugata 2 go, Yokei 4 go, Yokei 2 go, Chokei 3 go, Custum 1 to 4			
3	Cassette 3				
4	Cassette 4				
5	Cassette 3	Fix A4, Letter or B5.	Plain, Vellum, Recycle, Preprint, Bond, Hagaki, Color, Punched, Letterhead, Thick, Envelope, High Quality, Custom 1 to 8	1,500 sheets (80 g/m^2)	page 2-24
6	Cassette 4				
7	Cassette 2			3,000 sheets (80 g/m^2)	page 2-26

(8-3)Set paper to the cassette 1

1 Pull the cassette completely out of the main unit.

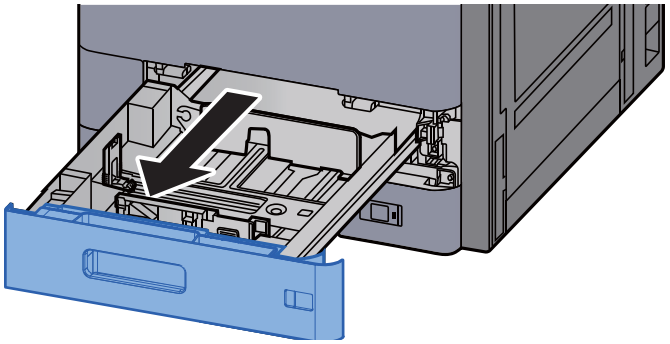

NOTE

Do not pull out multiple cassettes at once.

2 Adjust the position of the paper length guide.

1 Press the tab and slide the guides to the paper size to use.

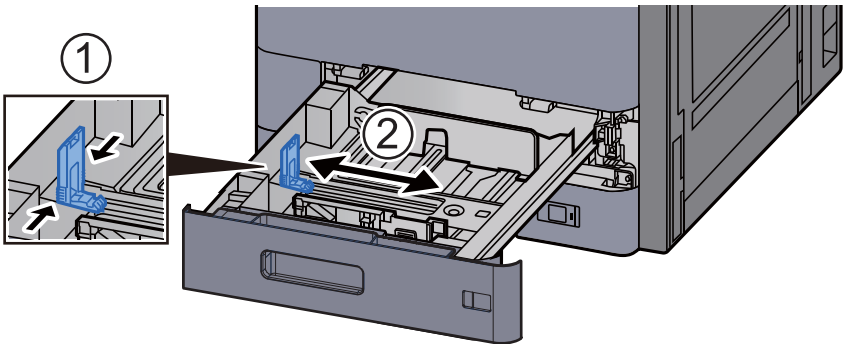

NOTE

In case of using Legal size, move the paper length guide to the leftmost and lay it down.

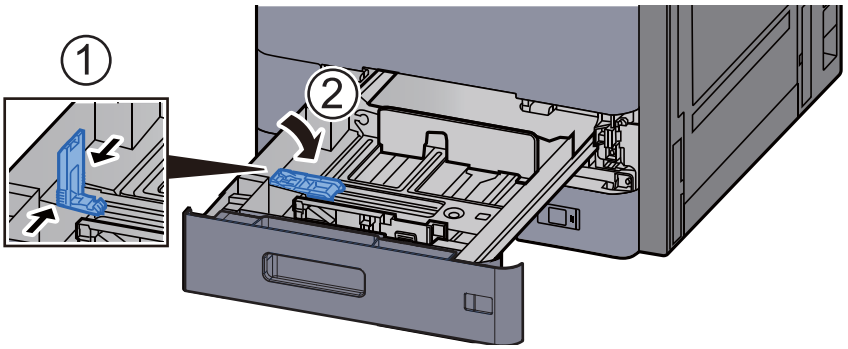

3 Adjust the position of the paper width guides.

1 Press the tab and slide the guides to the paper size to use.

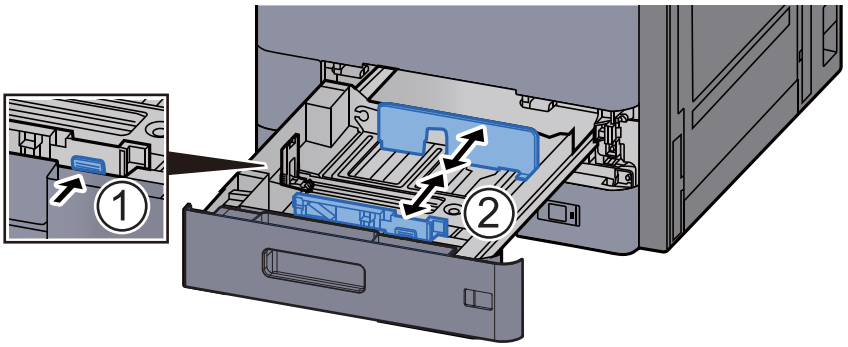

4 Load paper.

1 Fan the paper, then tap it on a level surface to align the edges.

2 Load the paper in the cassette after aligning its edges.

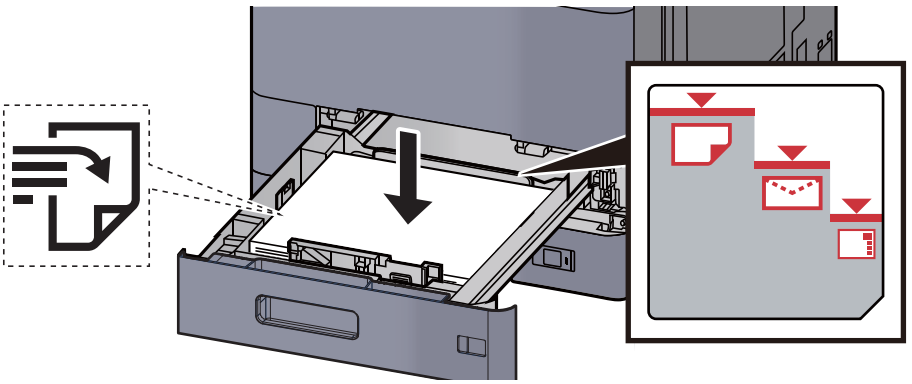

CAUTION

- Load the paper with the print side facing up.
- Before loading paper in the cassette, fan the paper from a new package to separate it. (See page page 2-12)
- Before loading the paper, be sure that it is not folded. Folding or curling causes paper jam.
- Make sure that the loaded paper does not exceed the level indicator (see the illustration above).
- If paper is loaded without adjusting the paper length guide and paper width guides to the paper size, this makes paper skew or jam.

5 Check if the paper length guide and paper width guide are securely aligned to the paper.

Align the paper length guide or paper width guide if gaps are observed.

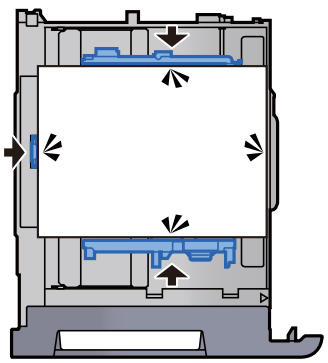

6 **Insert the cassette all the way into the main unit gentry.**

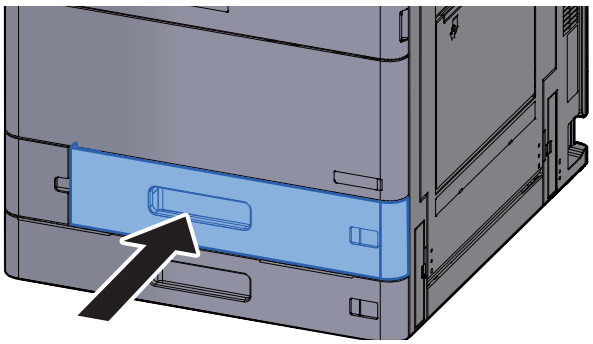

7 **Insert the paper size sheet and media type labels.**

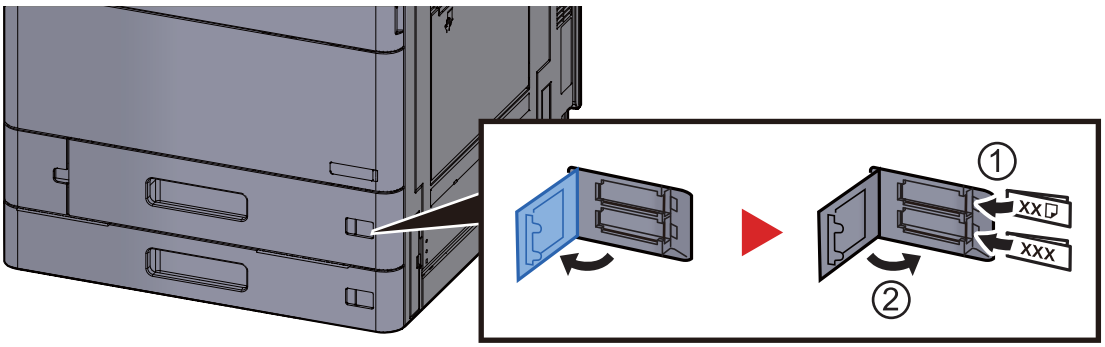

(8-4)Set paper in the cassette 2

1 Pull the cassette completely out of the main unit.

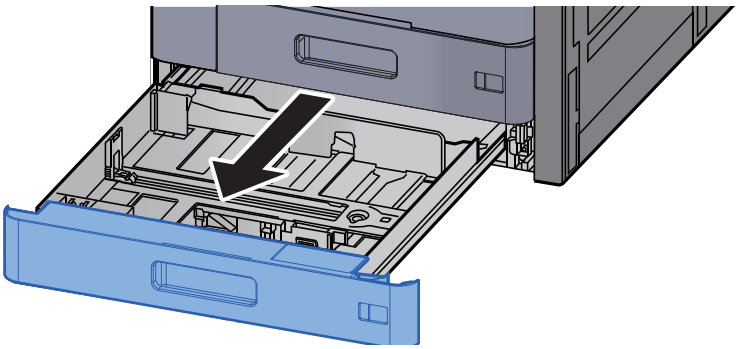

NOTE

Do not pull out multiple cassettes at once.

2 Adjust the position of the paper length guide.

1 Press the tab and slide the guides to the paper size to use.

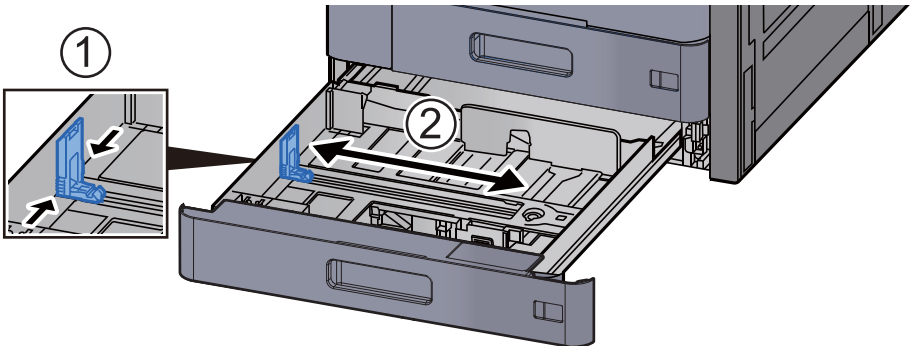

NOTE

Move the paper length guide to the leftmost in case of using 12x18".

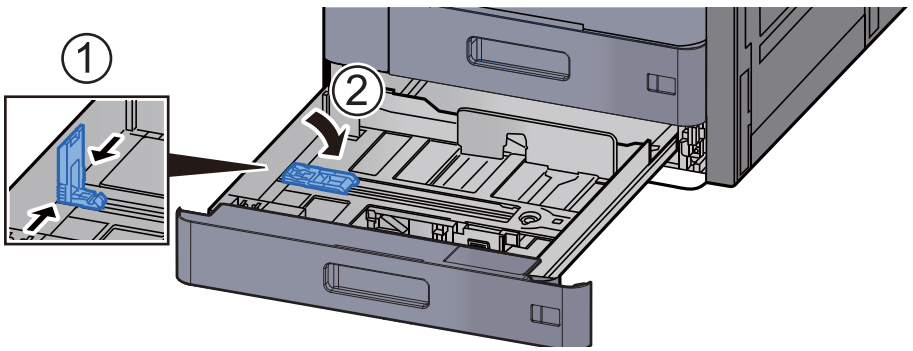

3 Adjust the position of the paper width guides.

1 Press the tab and slide the guides to the paper size to use.

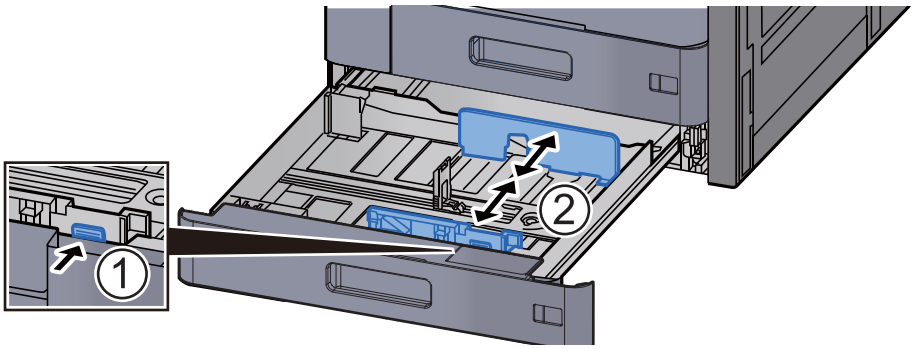

NOTE

Adjust the additional paper size guide in case of using SRA3/12x18", A3 or Leger.

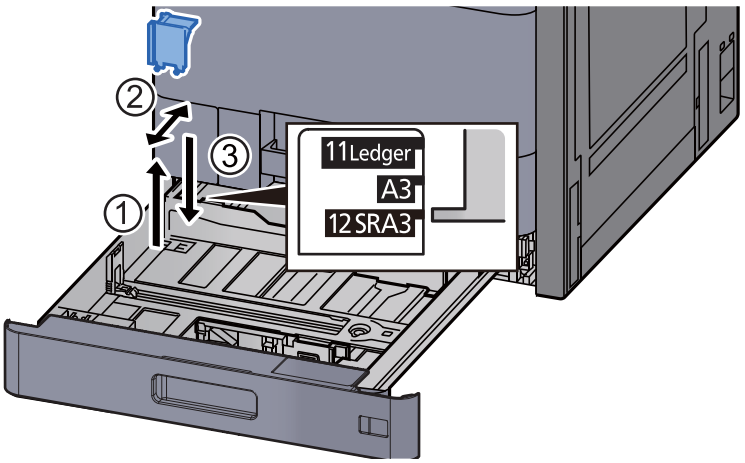

4 Load paper.

1 Fan the paper, then tap it on a level surface to align the edges.

2 Load the paper in the cassette after aligning its edges.

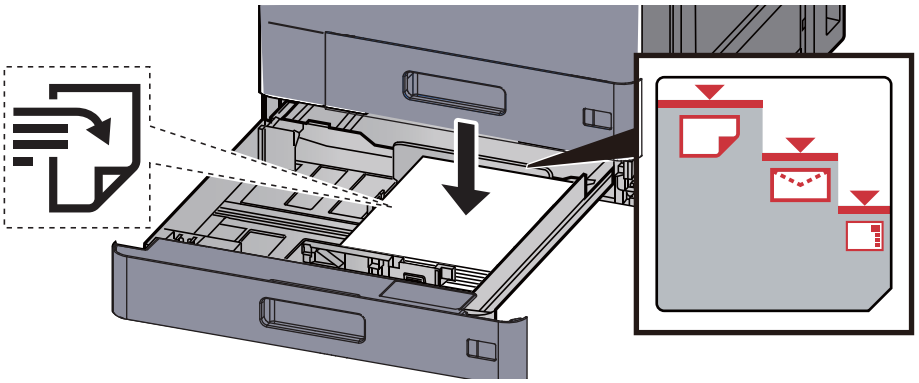

CAUTION

- Load the paper with the print side up.
- Before loading paper in the cassette, fan the paper from a new package to separate it. (See page page 2-12)
- Before loading the paper, be sure that it is not curled or folded. Folding or curling causes paper jam.
- Make sure that the loaded paper does not exceed the level indicator (see the illustration above).
- If paper is loaded without adjusting the paper length guide and paper width guides to the paper size, this makes paper skew or jam.

5 Check if the paper length guide and paper width guide are securely aligned to the paper.

Align the paper length guide or paper width guide if gaps are observed.

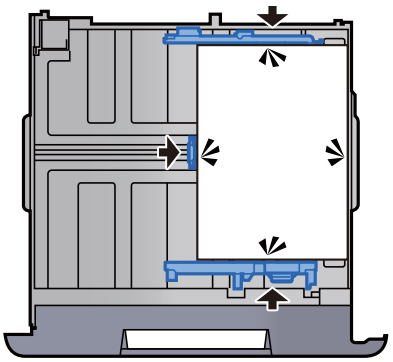

6 Insert the cassette all the way into the main unit gentry.

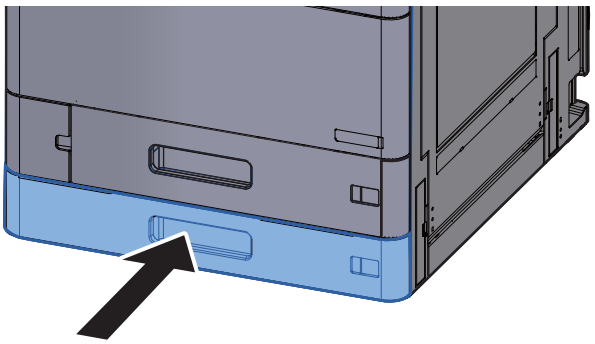

7 Insert the paper size sheet and media type labels.

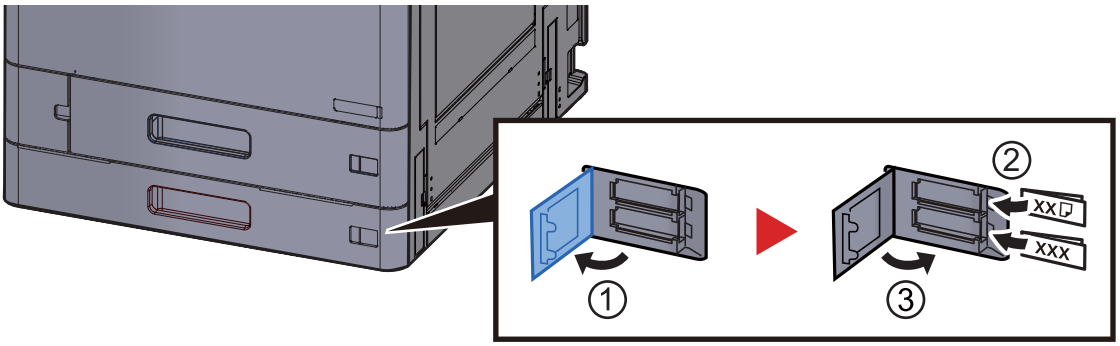

(8-5)Set postcard and envelope in the cassette

Set postcard and envelope in the cassette. The following procedure is an example for the cassette 1.

1 **Pull the cassette completely out of the main unit.**

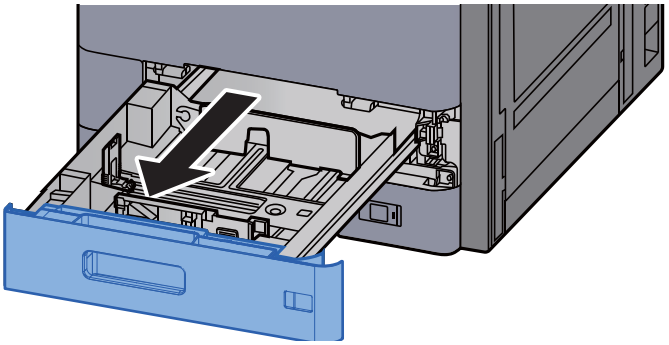

2 **Take out additional envelope guide.**

Proceed to step 5 in case of using a postcard.

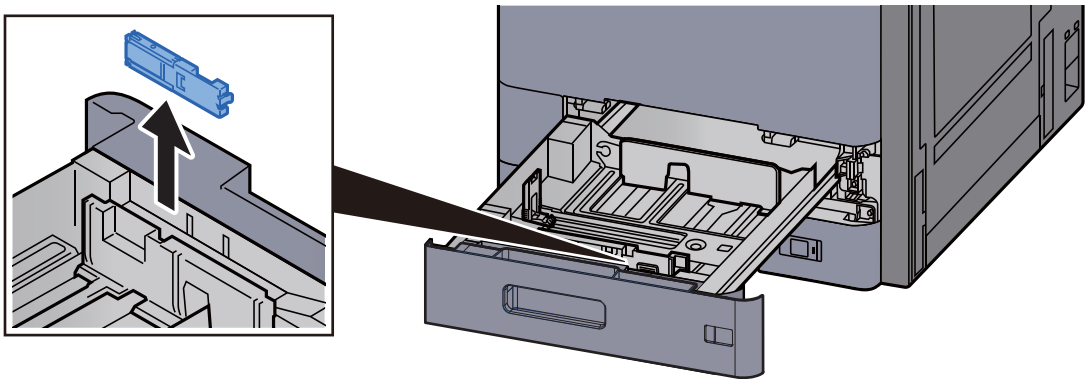

3 **Open levers in case of using wider than Envelope C5 (162 mm W).**

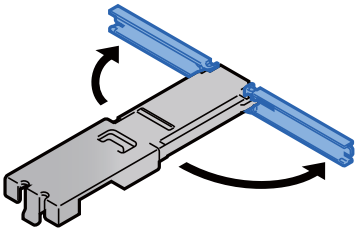

4 **Attach the guide as shown in picture.**

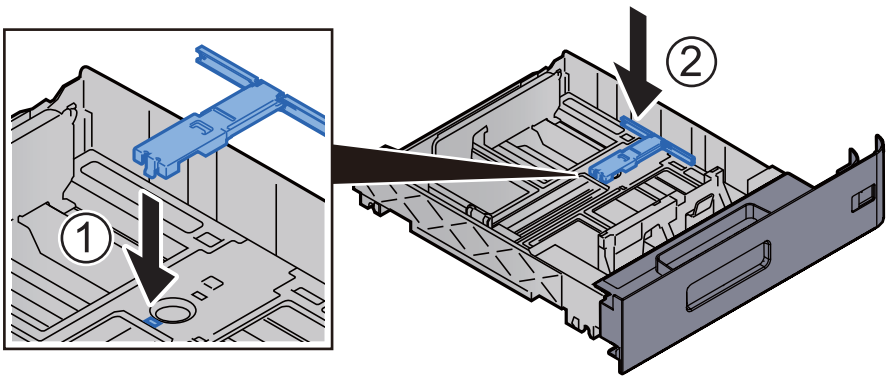

5 Adjust the position of the paper length guide.

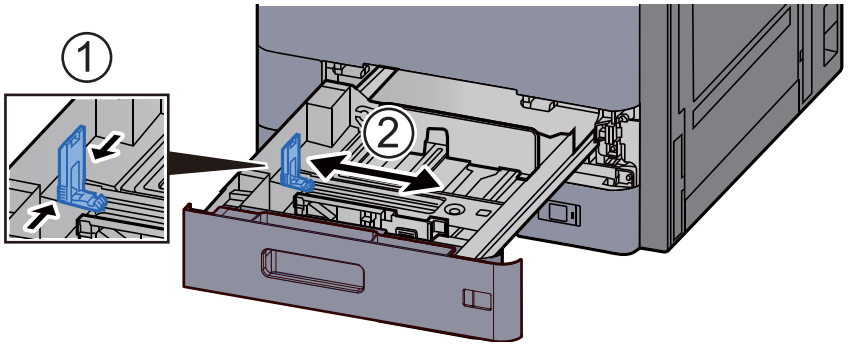

6 Adjust the position of the paper width guides.

1 Press the tab and slide the guides to the paper size to use.

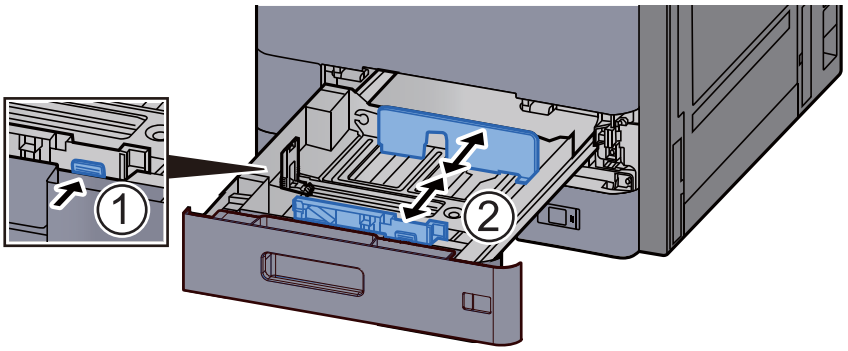

7 Load the paper with the print side up.

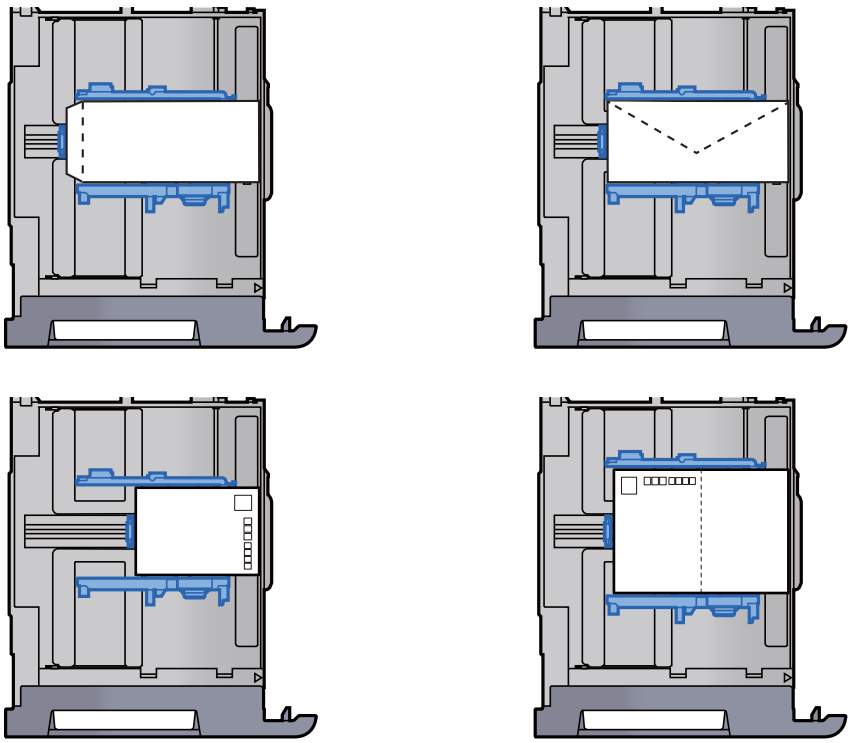

8 Check if the paper length guide and paper width guide are securely aligned to the paper.

Align the paper length guide or paper width guide if gaps are observed.

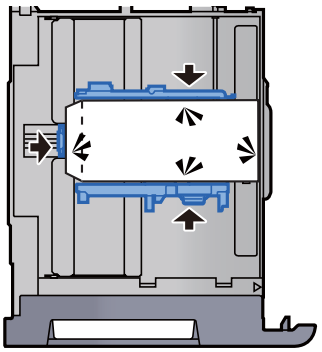

1 Insert the cassette all the way into the main unit gentry.

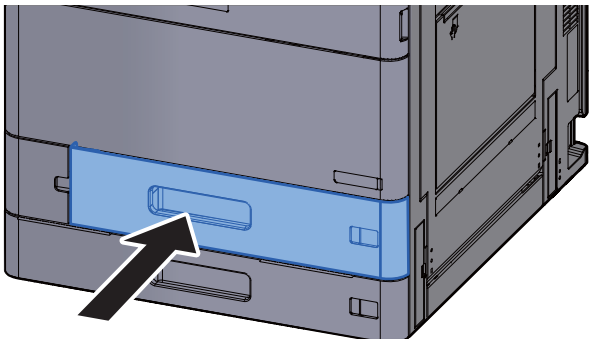

(8-6)Set paper in the large capacity feeder

*: The following procedure is an example for the cassette 3.

1 Pull the cassette completely out of the main unit.

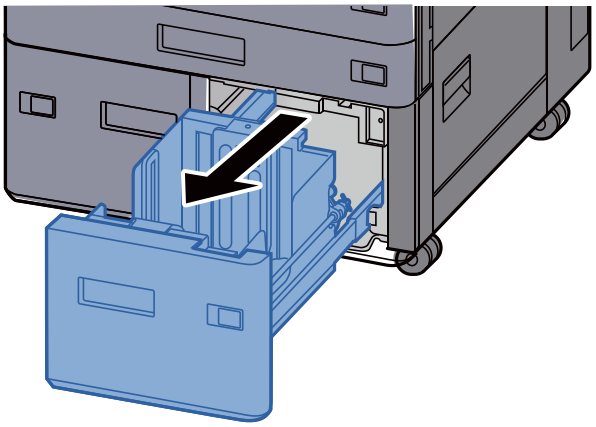

2 Load paper.

1 Fan the paper, then tap it on a level surface to align the edges.

2 Load the paper in the cassette after aligning its edges.

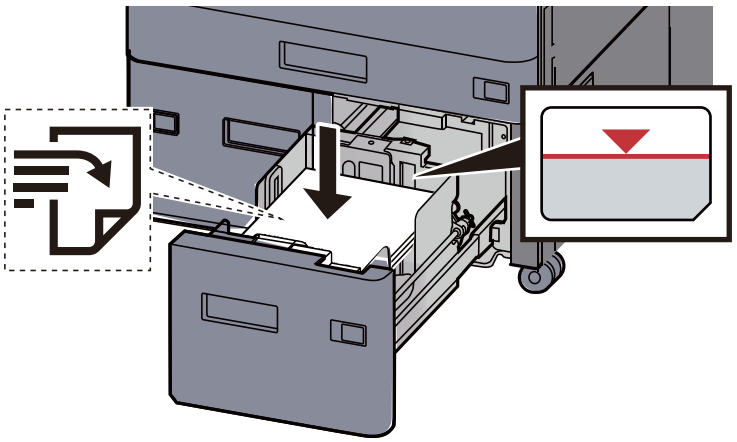

CAUTION

- Load the paper with the print side up.
- Before loading paper in the cassette, fan the paper from a new package to separate it. (See page page 2-12)
- Before loading the paper, be sure that it is not folded. Folding or curling causes paper jam.
- Make sure that the loaded paper does not exceed the level indicator (see the illustration above).

3 Insert the cassette all the way gentry.

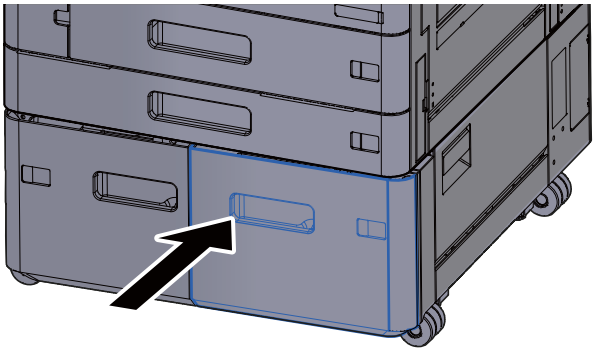

4 Insert the paper size sheet and media type labels.

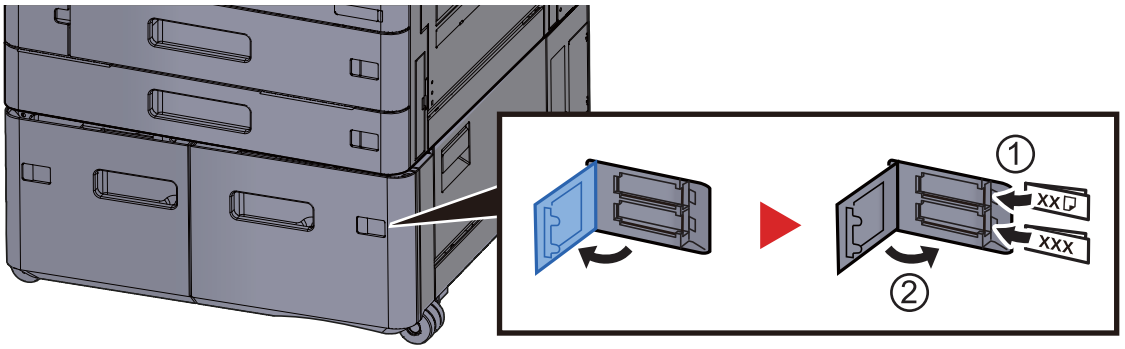

NOTE

Default paper size is A4/Letter. Please see Installation guide for changing paper size. A4 to B5, A4 to Letter or Letter to A4.

Run Maintenance mode U208 for paper size setting after change the size.

(8-7)Set paper in the side feeder

1 Pull the cassette completely out of the main unit.

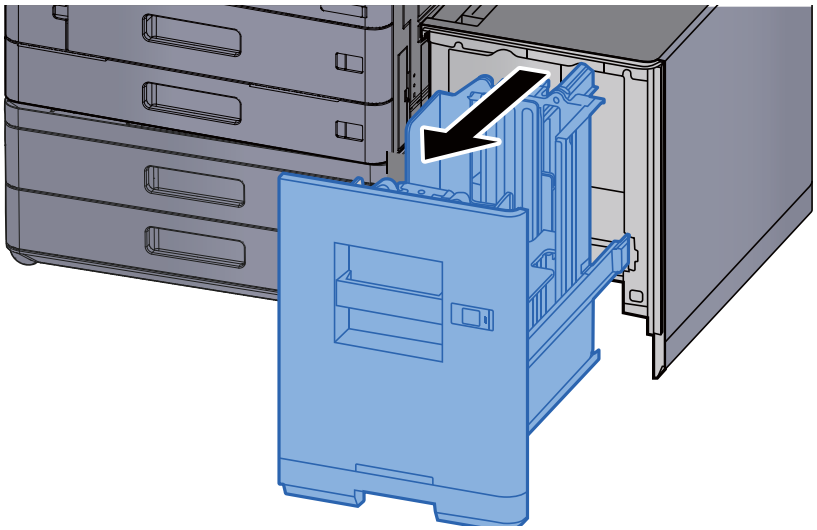

2 Load paper.

1 Fan the paper, then tap it on a level surface to align the edges.

2 Load the paper in the cassette after aligning its edges.

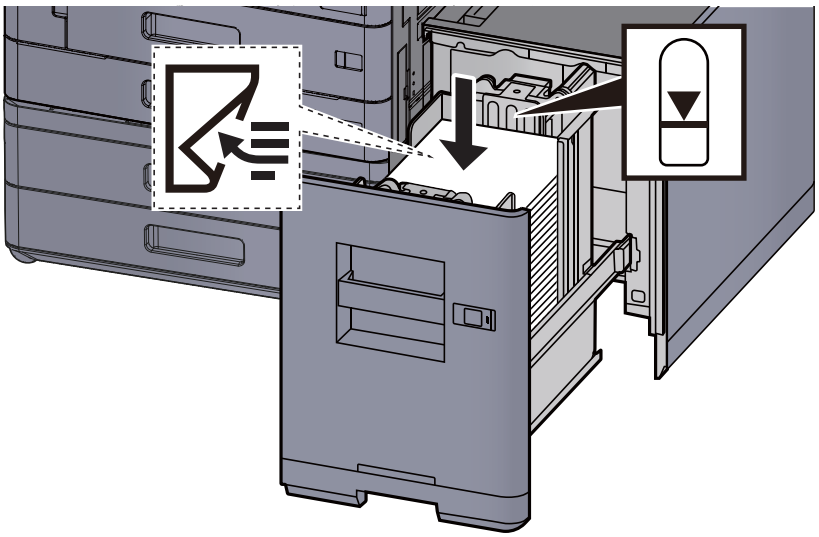

CAUTION

- Load the paper with the print side up.
- Before loading paper in the cassette, fan the paper from a new package to separate it. (See page page 2-12)
- Before loading the paper, be sure that it is not folded. Folding or curling causes paper jam.
- Make sure that the loaded paper does not exceed the level indicator (see the illustration above).

3 Insert the cassette all the way gentry.

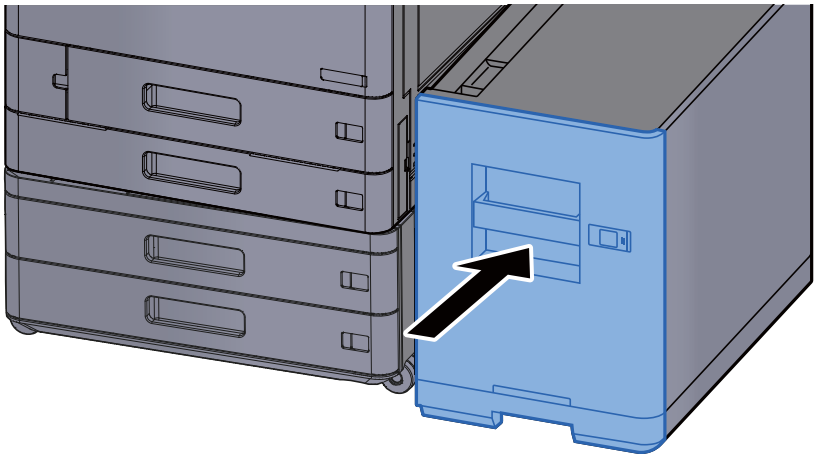

4 Insert the paper size sheet and media type labels.

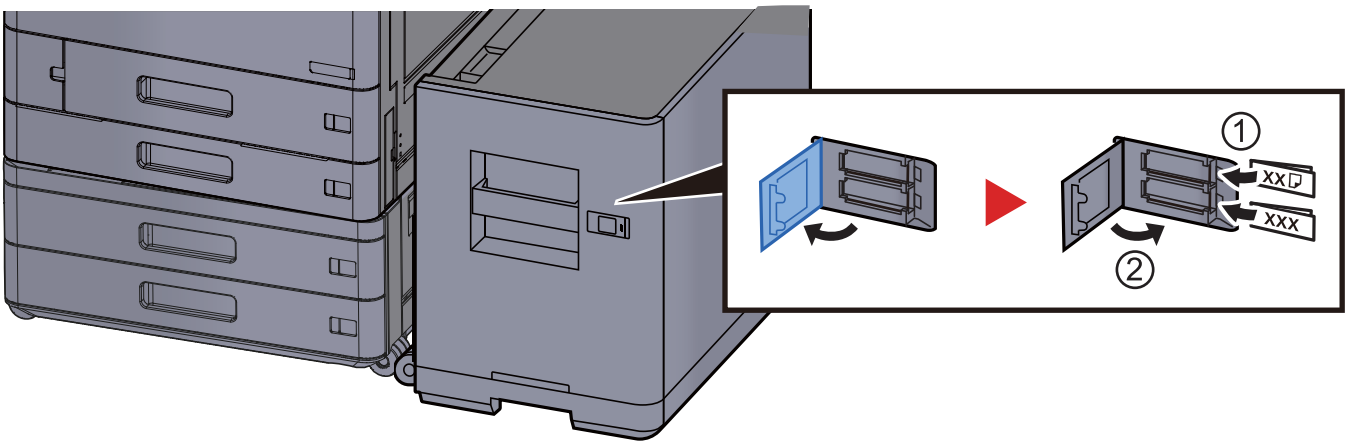

NOTE

Default paper size is A4/Letter. Please see Operation guide for changing paper size. A4 to B5, A4 to Letter or Letter to A4.

(See page page 2-12)

Run Maintenance mode U208 for paper size setting after change the size.

(9)Connecting the Power Cord

1 Connect the power cord in the box to the main unit and the other end to a power outlet.

- Only use the power cord that comes with the main unit.

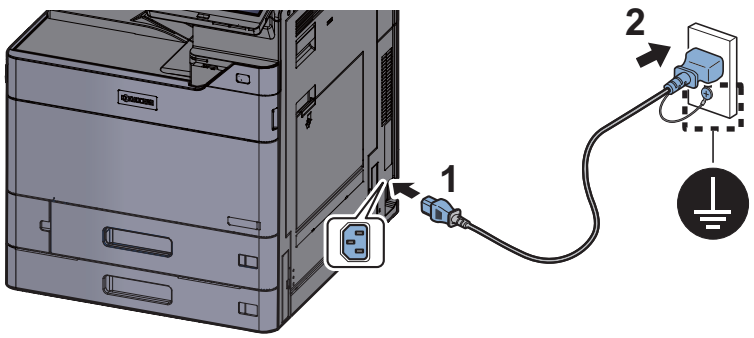

(10)Turn power on

1 Turn the power switch on.

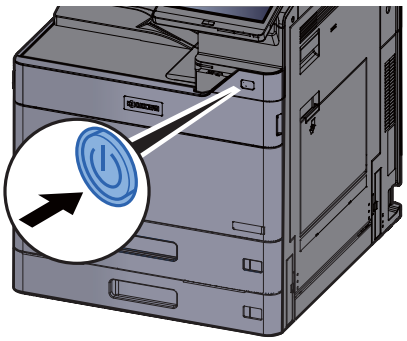

(11)Setting the speed license

This machine can change the print speed by purchasing and activating the Speed License ID.

The print speeds that can be changed are as follows.

[120V base model: 40 ppm]

Activate Kit (UG-39): 40 ppm changed to 50ppm

Activate Kit (UG-40): 40 ppm changed to 60ppm

Activate Kit (UG-41): 40 ppm changed to 70ppm

[220-240V base model: 50 ppm]

Activate Kit (UG-40): 50 ppm changed to 60ppm

Activate Kit (UG-41): 50 ppm changed to 70ppm

(11-1)When upgrading the printing speed

Issuing a license ID

Enter the Product ID and Machine Serial No. on the L Key Server to issue the License ID.

(Refund is not possible after issuing the License ID.)

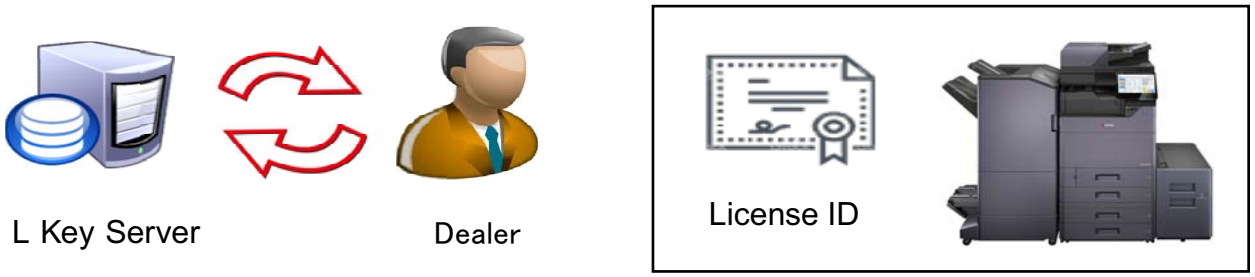

1 **After turning the power on for the first time, the License Mode screen is displayed.**

2 **Select Enter License Key.**

- For 120V models, move to the brand code input screen. (Go to step 3)

NOTE

When using NB-xx (120V model only), enter the brand code printed on the envelope.

- If it is not 120V, move to the license key input screen. (Go to step 4)

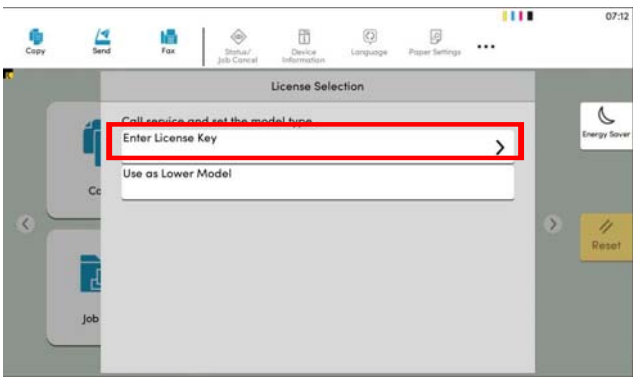

License mode screen

3 Enter the brand code (6 digits) and press OK.

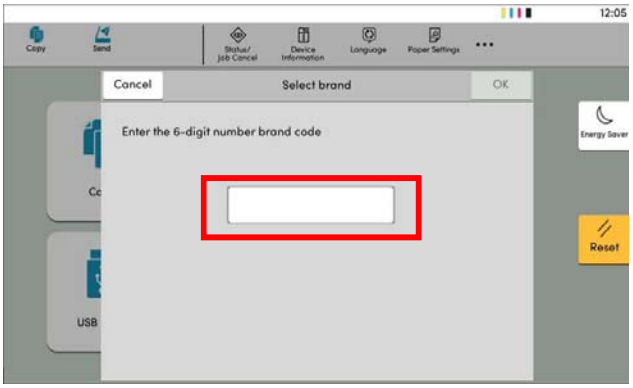

Brand code input screen

4 Enter the license key and press [Activate].

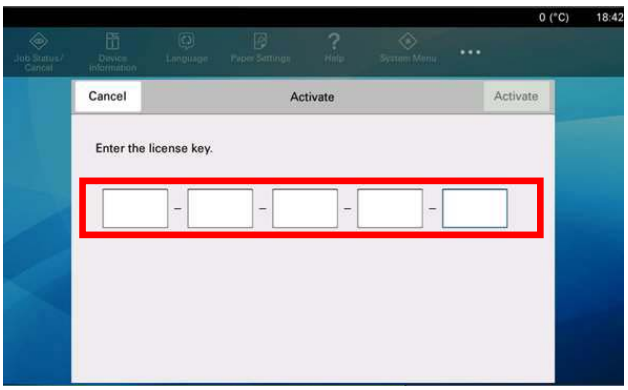

License key input screen

1 If the License Key is correct
"Please wait ..." is displayed, and then the device automatically restarts.

2 If the License Key is incorrect
The activation failure message will be displayed, and you will return to the License Mode screen.

IMPORTANT

After activation, attach the brand emblem and model name label included in NB-12 or NB-15.



Brand emblem

Model name label

(11-2)When printing speed is not changed

1 **After turning the power on for the first time, the License Mode screen is displayed.**

2 **Select Use on Low mode.**

- For 120V models, move to the brand code input screen. (Go to step 3)
- For devices other than 120V, move to the Activation confirmation screen. (Go to step 4)

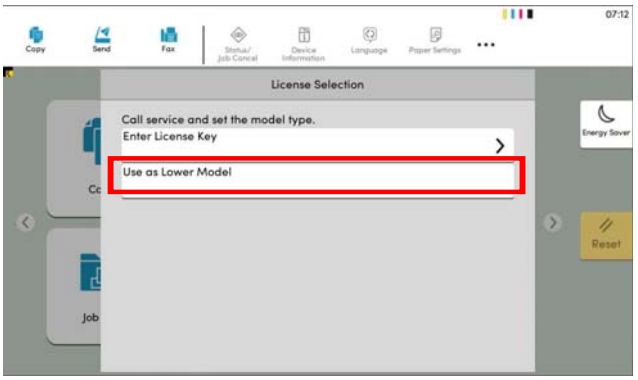

License mode screen

3 **Enter the brand code (6 digits) and press OK.**

NOTE

Enter the brand code shown on the envelope included in the kit.

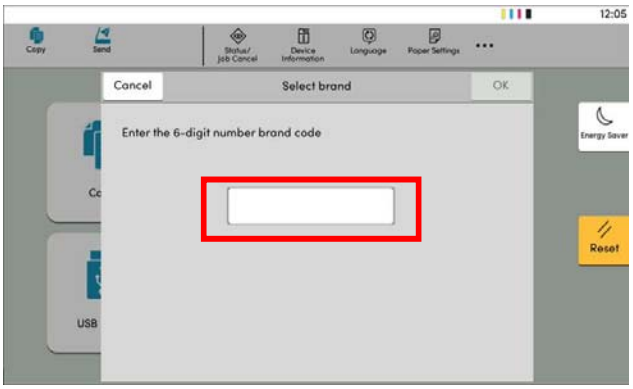

Brand code input screen

4 Select the check box and press OK.

- "Please wait ..." is displayed and then restarts.

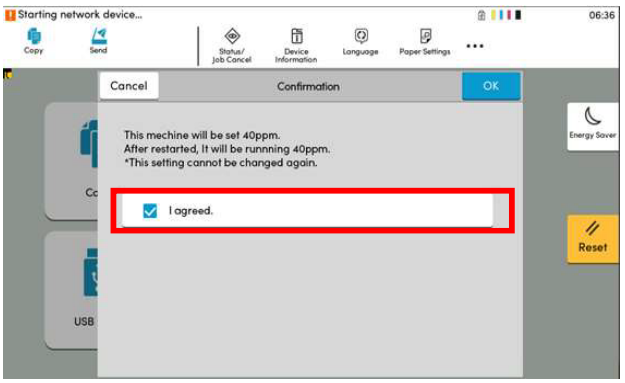

Activation confirmation screen

(12)Setting up the Toner Container

1 Open the front cover.

IMPORTANT

The container cover can not be opened unless the power is on. Turn on the power and release the container cover lock then open the front cover.

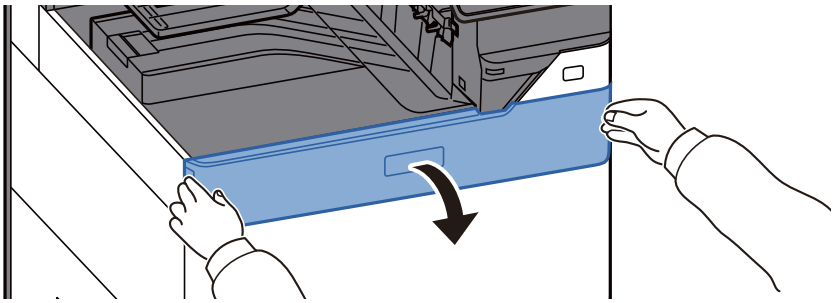

2 Take out the new toner container.

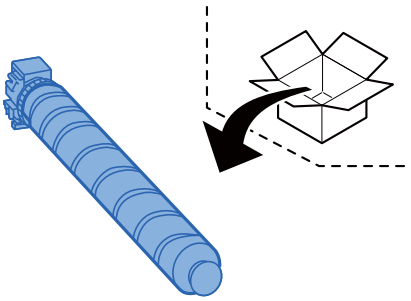

IMPORTANT

Do not touch the part with perforation by hand.

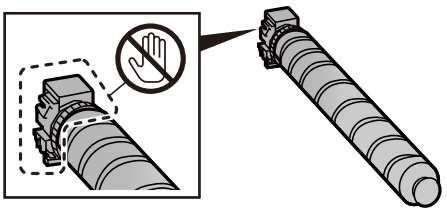

3 Slightly tap the toner container.

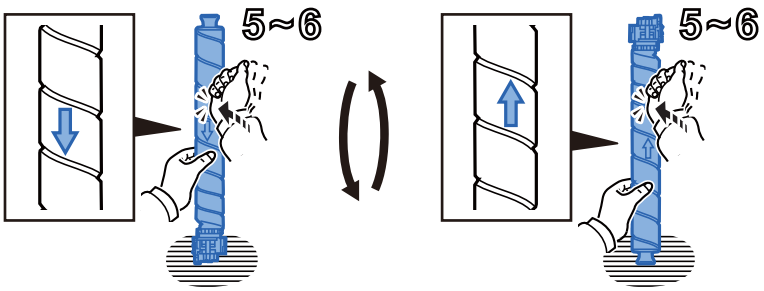

4 Shake the toner container.

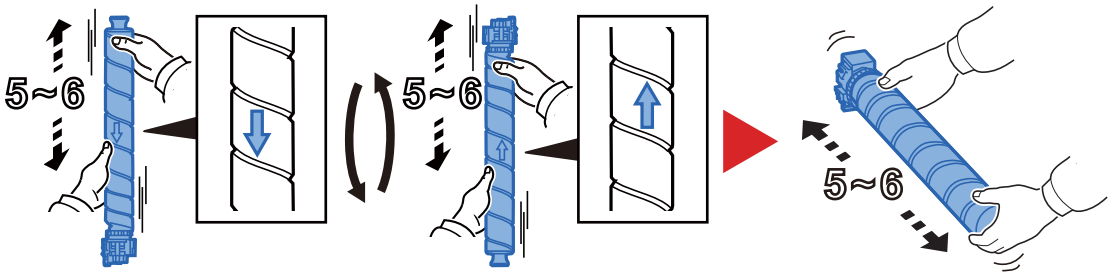

5 Install the toner container.

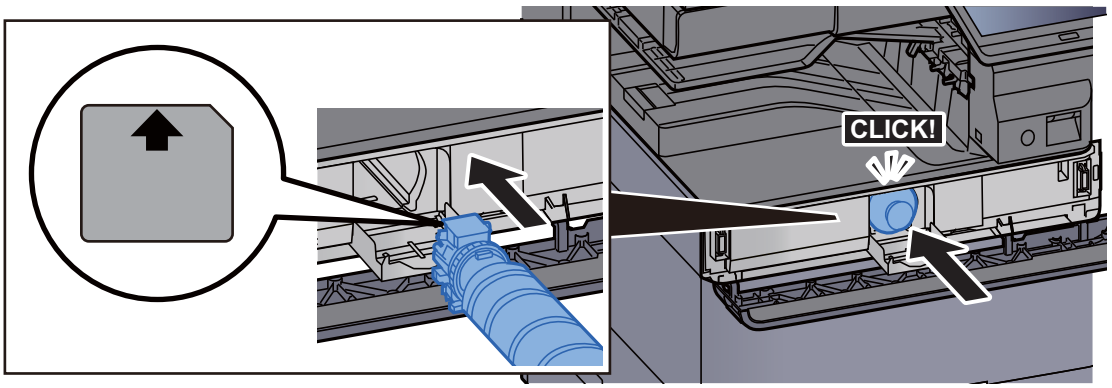

6 Close the toner container cover.

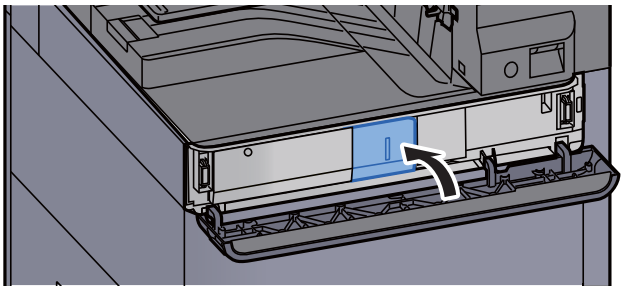

7 Close the front cover.

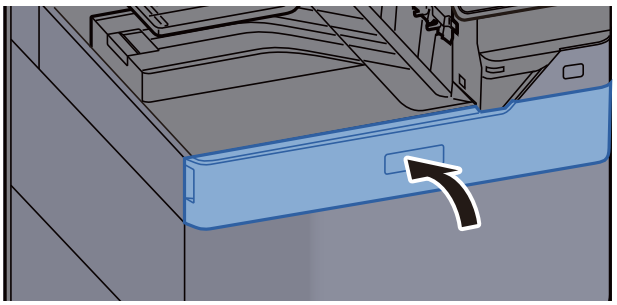

(13)Default Setting

The default settings of the machine can be changed in System Menu. Before using this machine, configure such settings as date and time, network configuration, and energy saving functions as needed.

(13-1)Setting Date and Time

Set the local date and time at the place of installation to main unit.

1 Display the screen

[Home] key > [System Menu] > [Device Settings] > [Date/Time]

2 Configure the settings

Set [Time Zone] > [Date and Time] > [Date Format]

Item	Description
Time Zone	Set the time difference from GMT. Select the nearest location from the list. If you select a region that utilizes summer time, set for summer time.
Date/Time	Set the date and time for the location where you use the machine. This date and time is recorded on a mail header once sending mail with send function of main unit. Setting value: Year (2000 to 2035), Month (1 to 12), Day (1 to 31), Hour (00 to 23), Minute (00 to 59), Second (00 to 59)
Date Format	Select the display format of year, month, and date. The year is displayed in A.D. Value: Month/ Day/ Year, Day/ Month/ Year, Year/ Month/ Day

(13-2)Network Setup (LAN Cable Connection)

TCP/IP (IPv4) Settings

Set up TCP/IP (IPv4) to connect to the Windows network.
The default settings are as follows.

- TCP/IP: On
- DHCP: On
- Auto-IP: On
- IP Address: 0.0.0.0
- Subnet Mask: 0.0.0.0
- Default Gateway: 0.0.0.0

1 Select [Home] > [...] > [System Menu] > [Network Settings] > [Wired Network Settings].

2 Select [IPv4 Settings] for setting.

NOTE

If the user authentication screen appears, enter your login user name and login password and select [Login]. Login with administrator privileges.

The factory default of login user name and login password are shown below.

Model Name	Login User Name	Login Password
40 ppm model	4000	4000
50 ppm model	5000	5000
60 ppm model	6000	6000
70 ppm model	7000	7000

In case of using DHCP server

[DHCP]: Set to [On].

- In case of setting the static IP address

[DHCP]: Set to [Off].

[IP Address]: Enter the address.

[Subnet Mask]: Enter the address.

[Default Gateway]: Enter the address.

- In case of setting Auto IP address

Set the IP address to 0.0.0.0.

In case of setting the static IP address

Set the IP address to 0.0.0.0.

In case of using Host name with DHCP setting [OFF].

In case of using DNS server that is not given IP address from DHCP automatically.

Select [Auto (DHCP)] or [Manual] In case of selecting [Manual], input [DNS server (Primary)] and [DNS server (Secondly)].

IMPORTANT

Restart the network from System Menu, or turn the power off and then on waiting 5 seconds or more.

(13-3)Paper size and media type setting

1 Select [Home] key > [...} > [System Menu] > [Device Settings] > [Paper Feeding].

2 Select [Cassette 1 (- 5) Settings] or [MP Tray Settings].

3 Select [Paper Size] and [Media Type] to set them.

(14)Installing Software

Install appropriate software in your PC with the Web installer through our home page if you want to use the printer function of this machine or perform TWAIN / WIA transmission or Network FAX transmission from your PC.

(URL: https://kyocera.info/)

(15)Set up for high altitude locations.

In case of setting up at high altitude location, run below.
Select Maintenance mode U952 > [Execute] > [High Altitude] and follow bellow.

1 Maintenance mode U140 > [Altitude Adjustment]

Select the altitude range of [1001 - 2000m], [2001 - 3000m] or [3001 - 3500m].

2 Maintenance mode U464 > [Calib] > [Execute]

Press [Start] key.

(16)Adjusting image

Adjust image with Maintenance mode work flow (Maintenance mode U952)

1 Input "10871087" using the numeric keys to enter the maintenance mode.

2 Input "952" using the numeric keys and press {Start] key.

3 Select [Execute].

4 Select [Setup] for main unit and [EH Setup] for optional units.

5 Select maintenance modes listed on the display from top to bottom and press [Start] key to return to maintenance mode.

6 Run following maintenance modes after back to maintenance mode.

7 Press [Stop] key to get back to flow after finish each modes.

8 Repeat step 5 to 7 and complete the flow.

- In case that not executing the U952, set them with procedures below individually.

(16-1)Setting the ID correction operation (Maintenance mode U464)

1 Input "464" using the numeric keys and press [Start] key.

2 Select [Calib].

3 Press [Start] key.

- Calibration starts.

4 Press [Stop] key.

(16-2)Color registration adjustment (Maintenance mode U469)

1 Input "469" using the numeric keys and press [Start] key.

2 Select [Auto]. Output the automatic adjustment chart.

3 Select [Execute].

4 Set the chart on the table and press [Start] key.

- Execute the automatic adjustment. [OK] is indicated when adjustment completes.

5 Press [Stop] key.

(16-3)Adjusting the halftone automatically (Maintenance mode U410)

1 Input "410" using the numeric keys.

2 Press [Start] key.

- Execution information screen is displayed.
- Output 1 chart with A4/Letter size.

3 Place the test chart on to platen glass table with face down and arrow side far.

- Put approximately 20 sheets of white paper on to the chart.

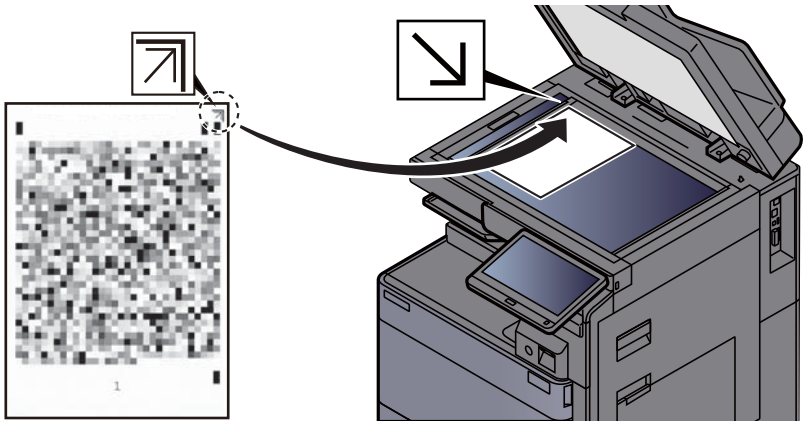

4 Press [Start] key.

- The auto adjustment is executed.

5 [Finish] appears after normal completion.

6 Press [Stop] key.

(16-4)Output Maintenance report (Maintenance mode U000)

1 Input "000" using the numeric keys and press [Start] key.

2 Select [Maintenance] and press [Start] key to output the maintenance report.

3 Press [Stop] key.

(16-5)Clearing the counts (Maintenance mode U927)

1 Input "927" using the numeric keys and press [Start] key.

2 Select [Execute].

3 Press [Start] key to clear the counter value.

4 Press [Stop] key.

(16-6)Setting the delivery date (Maintenance mode U278)

1 Input "278" using the numeric keys and press [Start] key.

2 Select [Today].

3 Press [Start] key to set the delivery date.

4 Press [Stop] key.

(17)Exiting from the maintenance mode

1 Input "001" using the numeric keys and press [Start] key.

- Get out of the maintenance mode.

(18)Completion of installing the main unit (Turning the power off)

1 Make sure that each indicators are not blinking, and then turn the power switch off.

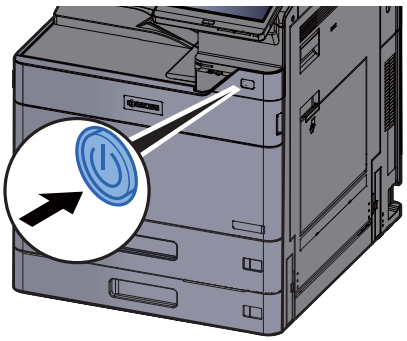

2 Select [Yes] in the confirmation screen.

- It may take a few minutes for power off.

(19)Motion sensor

This machine equips a motion sensor that detects a user approaching to machine and recover from sleep or low power mode automatically.

The detecting area can be changed with the lever located on the front.

1 Setting motion sensor

Select [Home] key > [...] > [System Menu] > [Device Settings] > [Energy Saver/Timer] > [Motion sensor].

Value: [On], [Off]

NOTE

In case of selecting [On], set sensitivity of the sensor. The levels are
[1] (Low) to [3] (High)

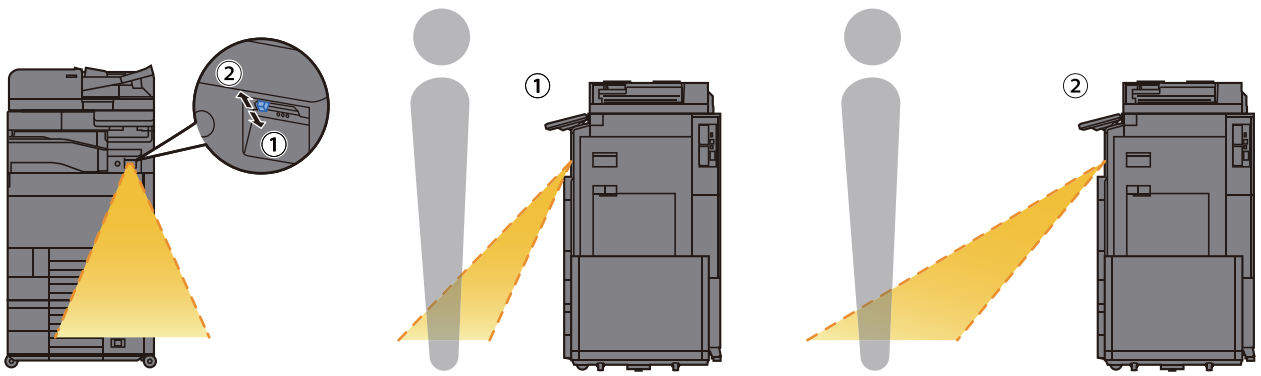

(20)Turn the power on again

1 Turn the power switch on.

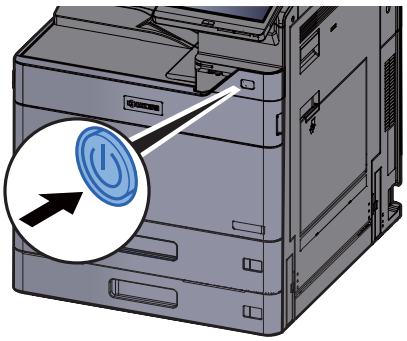

IMPORTANT

After turning off the power switch, do not turn on the power switch again immediately. Wait 5 seconds or more, and then turn on the power switch.

2 - 3 Optional unit installation

(1)Unpacking and checking bundled items

Take out the main unit and accessories from the packing case.

Remove tapes and packing materials from the main unit.

(1-1)Paper Feeder (PF-7140)

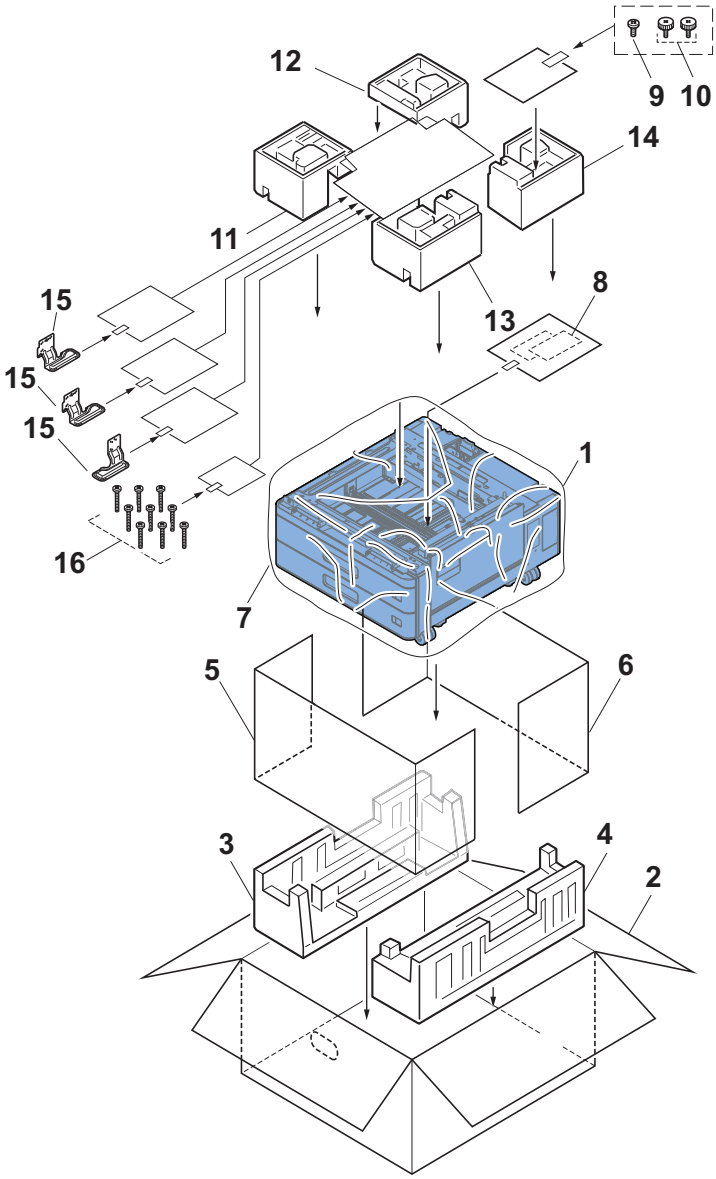

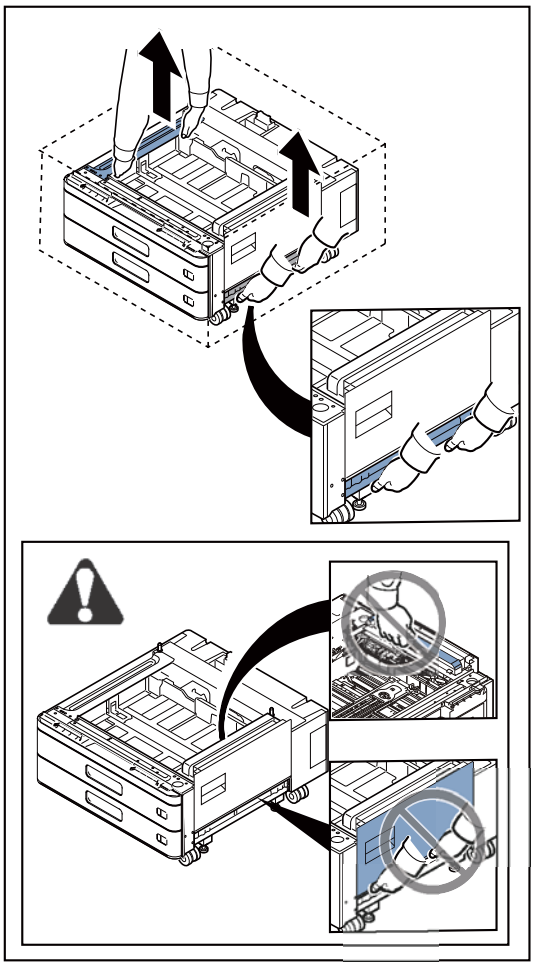

1	Main unit	7	Main unit cover	13	Front right upper pad
2	Outer case	8	Size label	14	Rear right upper pad
3	Left bottom pad	9	Screw	15	Support plate
4	Right bottom pad	10	Pins	16	Screw
5	Front inner frame	11	Front left upper pad		
6	Rear inner frame	12	Rear left upper pad		

(1-2)Large capacity feeder (PF-7150)

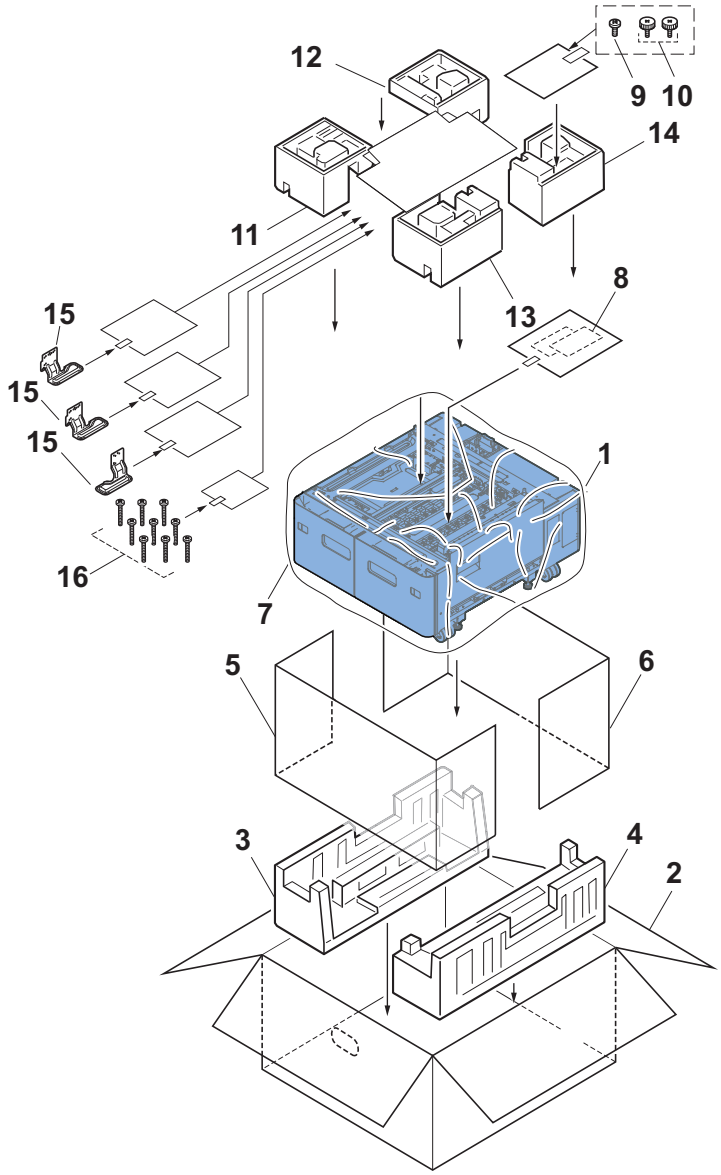

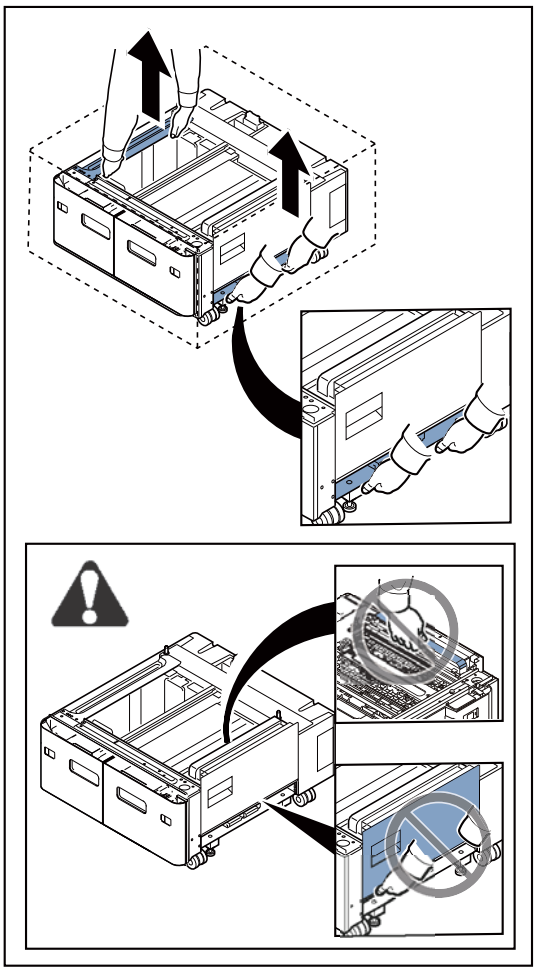

1	Main unit	7	Main unit cover	13	Front right upper pad
2	Outer case	8	Size label	14	Rear right upper pad
3	Left bottom pad	9	Screw	15	Support plate
4	Right bottom pad	10	Pins	16	Screw
5	Front inner frame	11	Front left upper pad		
6	Rear inner frame	12	Rear left upper pad		

(1-3)Side Paper Feeder (PF-7120)

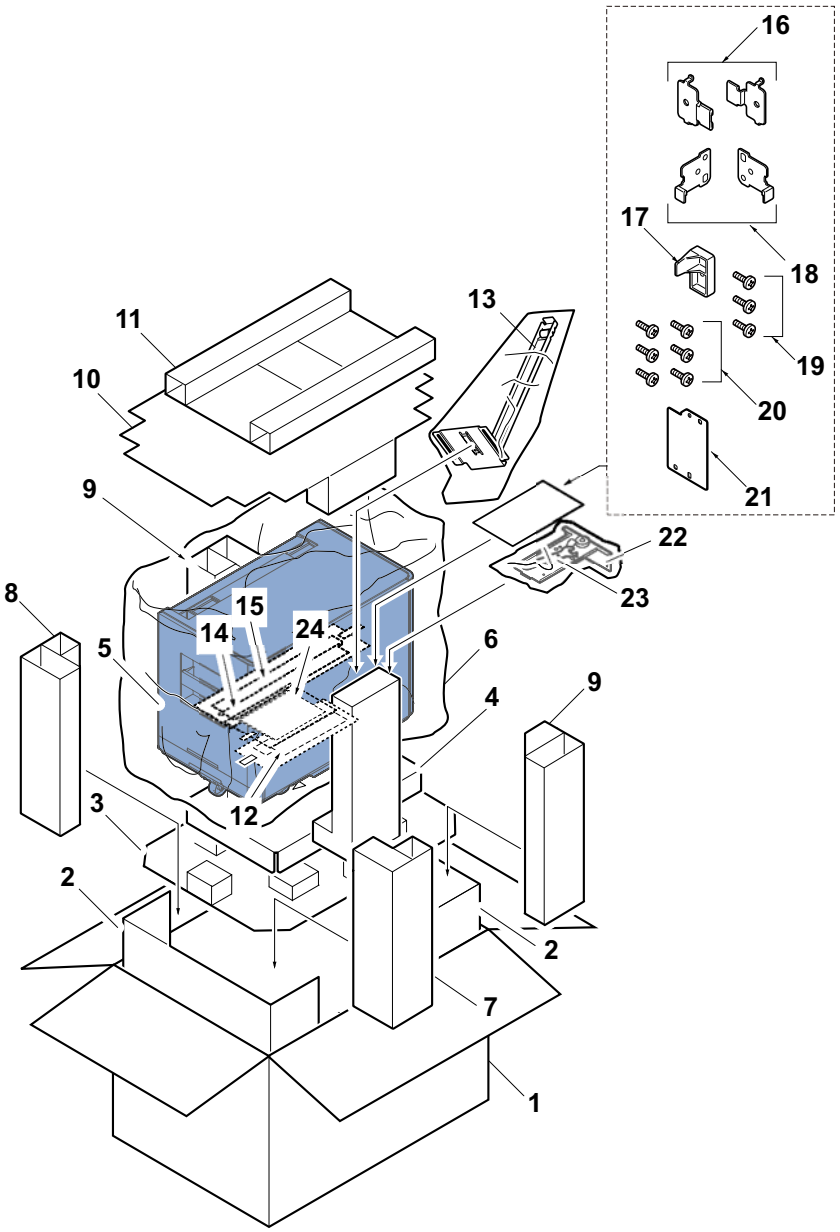

1	Outer case	9	Rear stay	17	Switch lever
2	Inner frame	10	Cover sheet	18	Lock support plate B
3	Bottom pad	11	Upper pad	19	Screws (M3x8 P-tite)
4	Bottom cushion	12	Size label	20	Screws (M4x8B S-tite)
5	Main unit	13	Attachment A	21	Cover plate
6	Main unit cover	14	Guide film A	22	Attachment B
7	Front right stay	15	Guide film B	23	Wrench
8	Front left stay	16	Lock support plate A	24	Installation guide

(1-4)Document Processor (DP-7150)

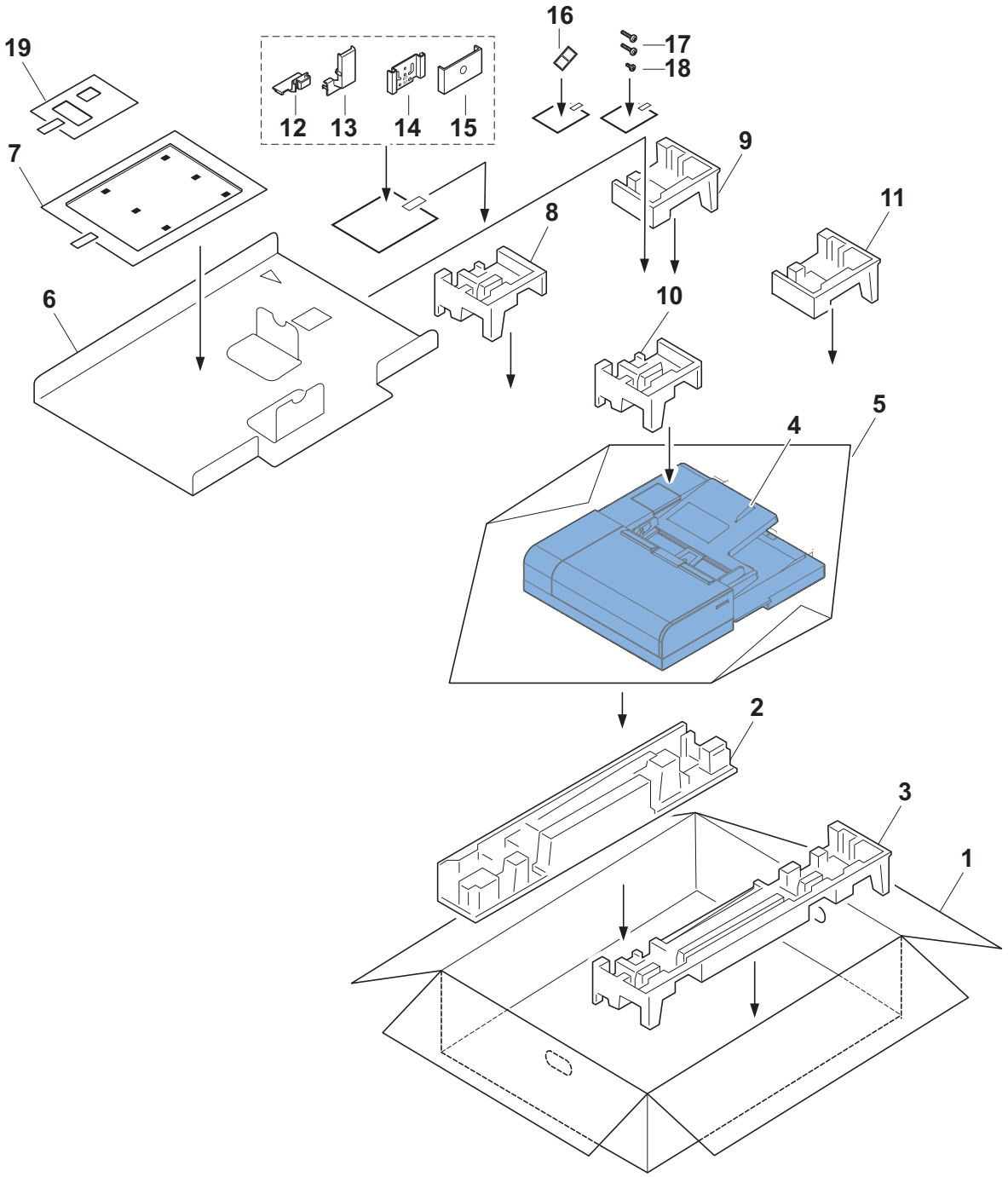

1 Outer case	7 Original mat	13 DP cable cover rear
2 Rear bottom pad	8 Rear left upper pad	14 Hinge cover left
3 Front bottom pad	9 Rear right upper pad	15 Hinge cover right
4 Document Processor	10 Front left upper pad	16 Label
5 Plastic sheet	11 Front right upper pad	17 Screw
6 Original mat holder	12 DP cable cover front	18 Screw
		19 Label

(1-5)Document Processor (DP-7160/DP-7170)

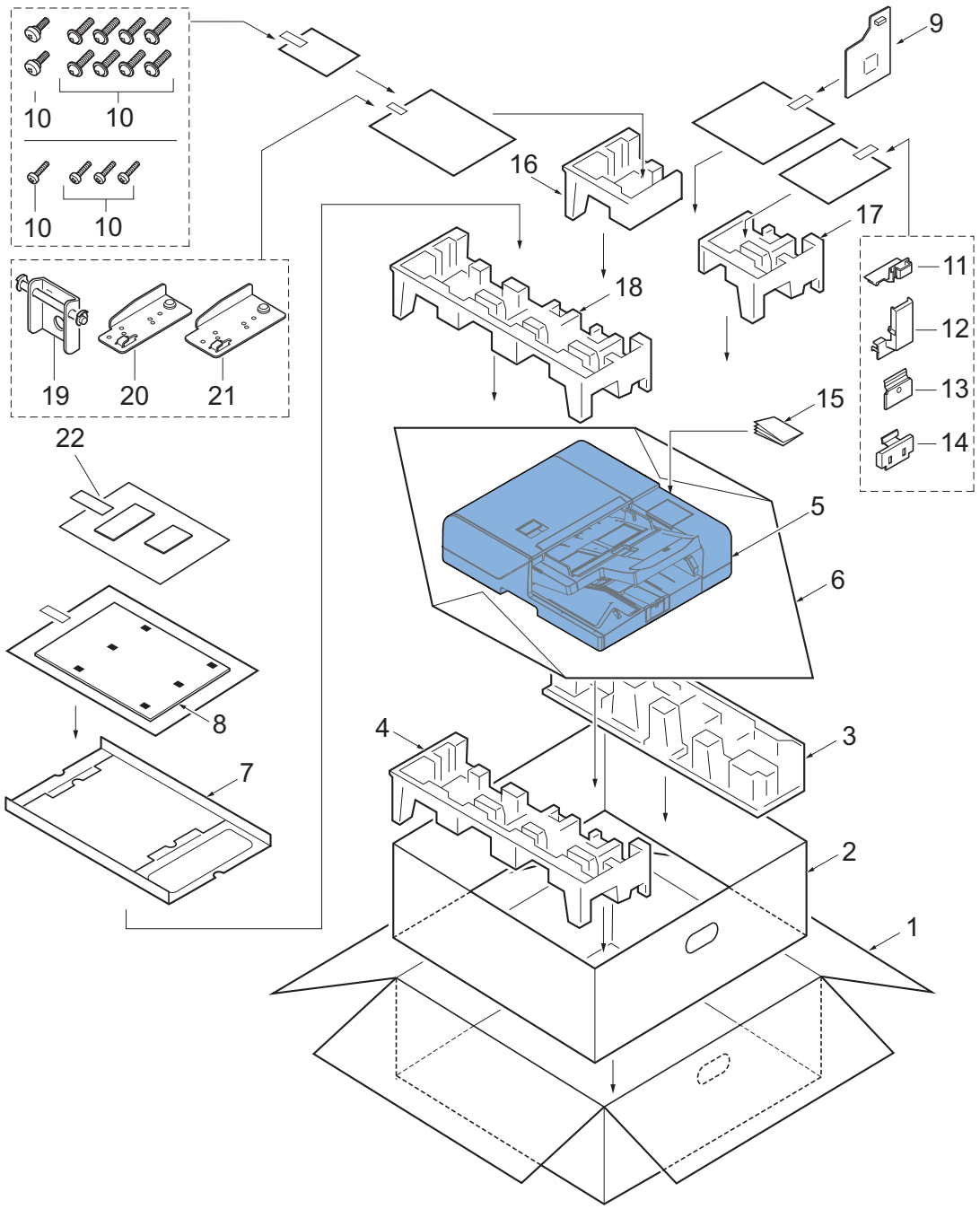

1 Outer case	8 Original mat	15 Cleaning cloth
2 Inner frame	9 DP relay PWB	16 Rear left upper pad
3 Rear bottom pad	10 Screw	17 Rear right upper pad
4 Front bottom pad	11 DP cable cover front	18 Front upper pad
5 Document Processor	12 DP cable cover rear	19 Angle control bracket
6 Plastic sheet	13 Hinge cover left	20 Right bracket
7 Original mat holder	14 Hinge cover right	21 Left bracket
		22 Label

(1-6)Inner Finisher (DF-7100)

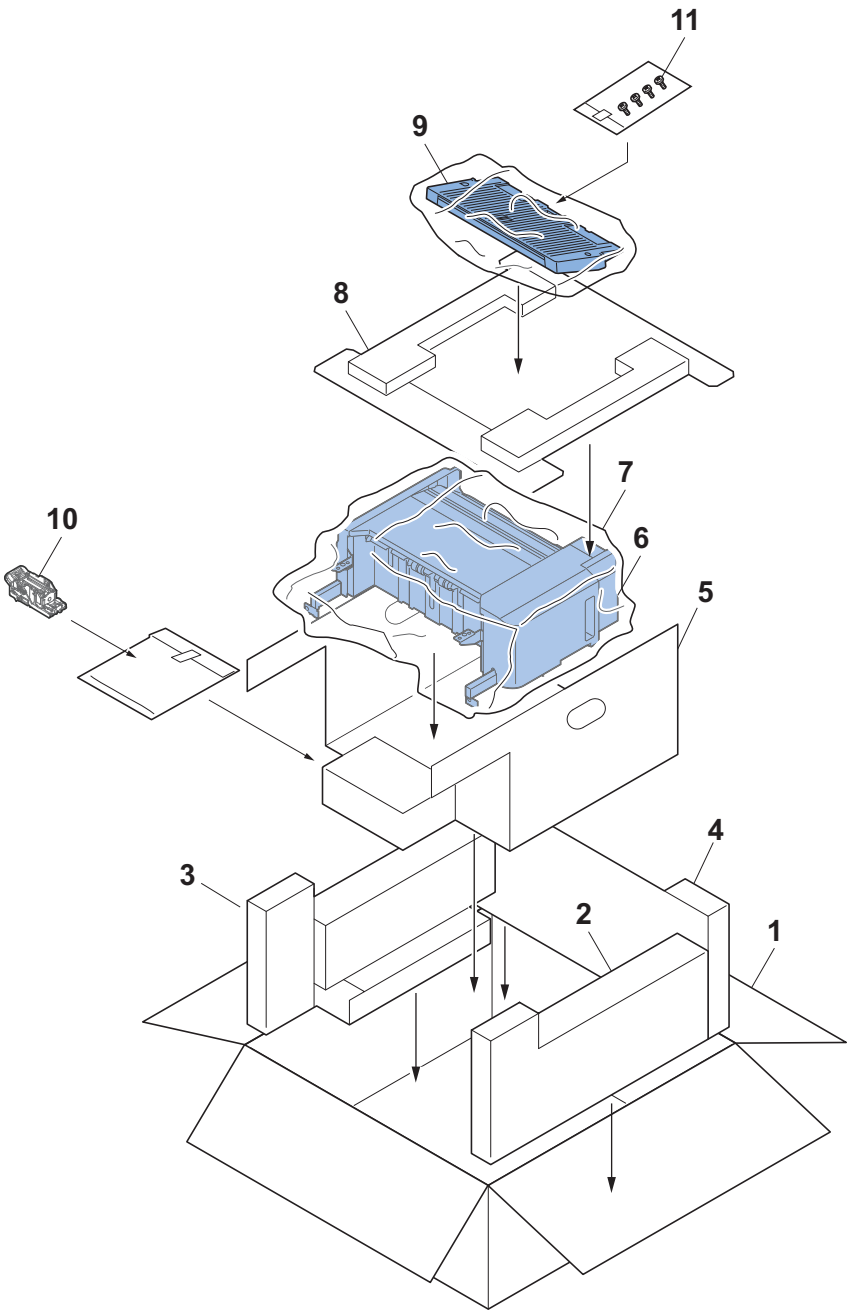

1	Outer case	5	Bottom spacer	9	Tray
2	Front bottom pad	6	Inner finisher	10	Staple cartridge
3	Rear bottom pad	7	Main unit cover	11	Screw
4	Right bottom pad	8	Top spacer		

(1-7)Attachment Kit (AK-7110)

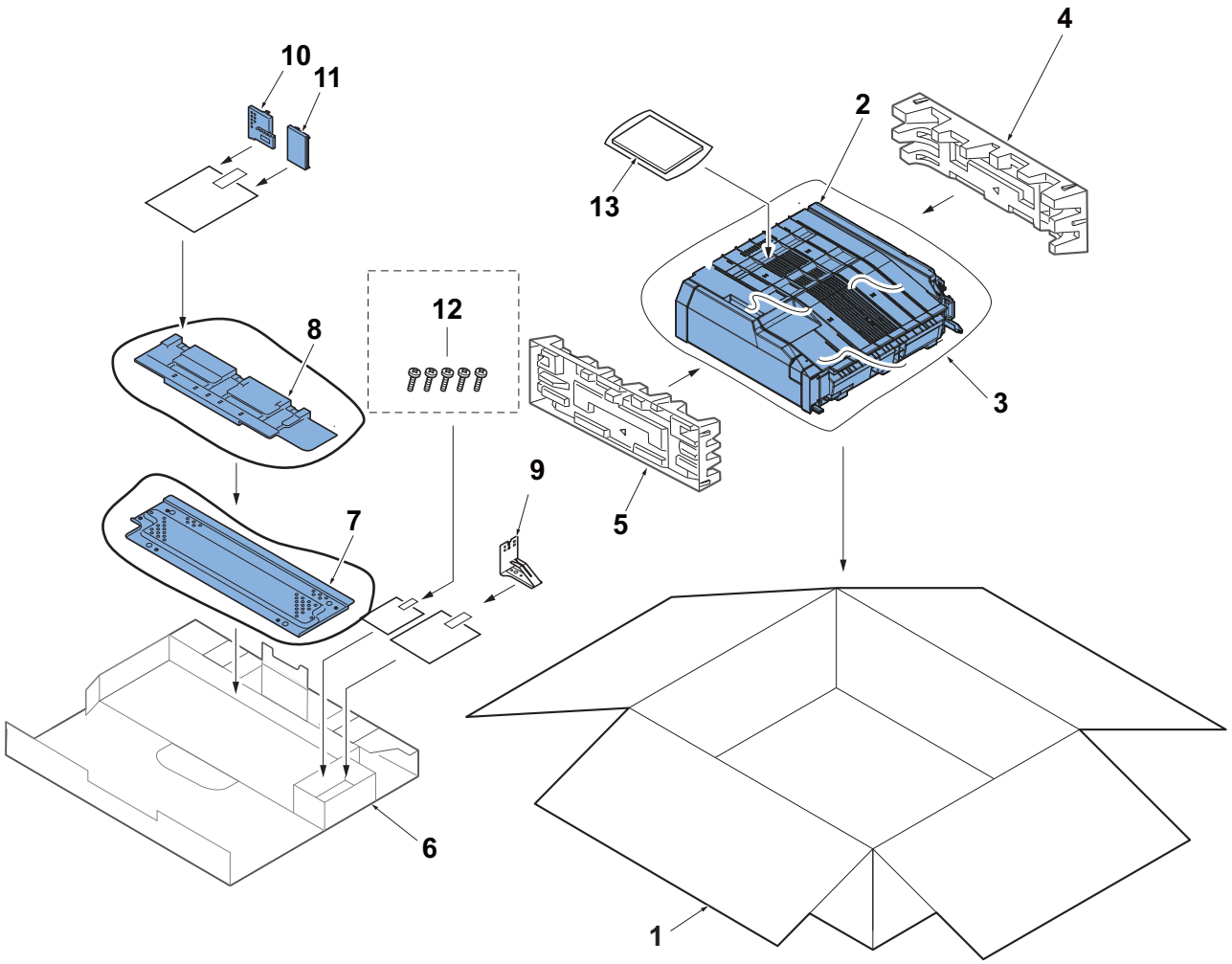

1	Outer case	5	Rear pad	9	Left cover
2	Attachment Kit	6	Rock plate	10	Screw
3	Main unit cover	7	Main unit cover	11	Installation guide
4	Front pad	8	Rail		

(1-8)1,000-sheets Finisher (DF-7120)

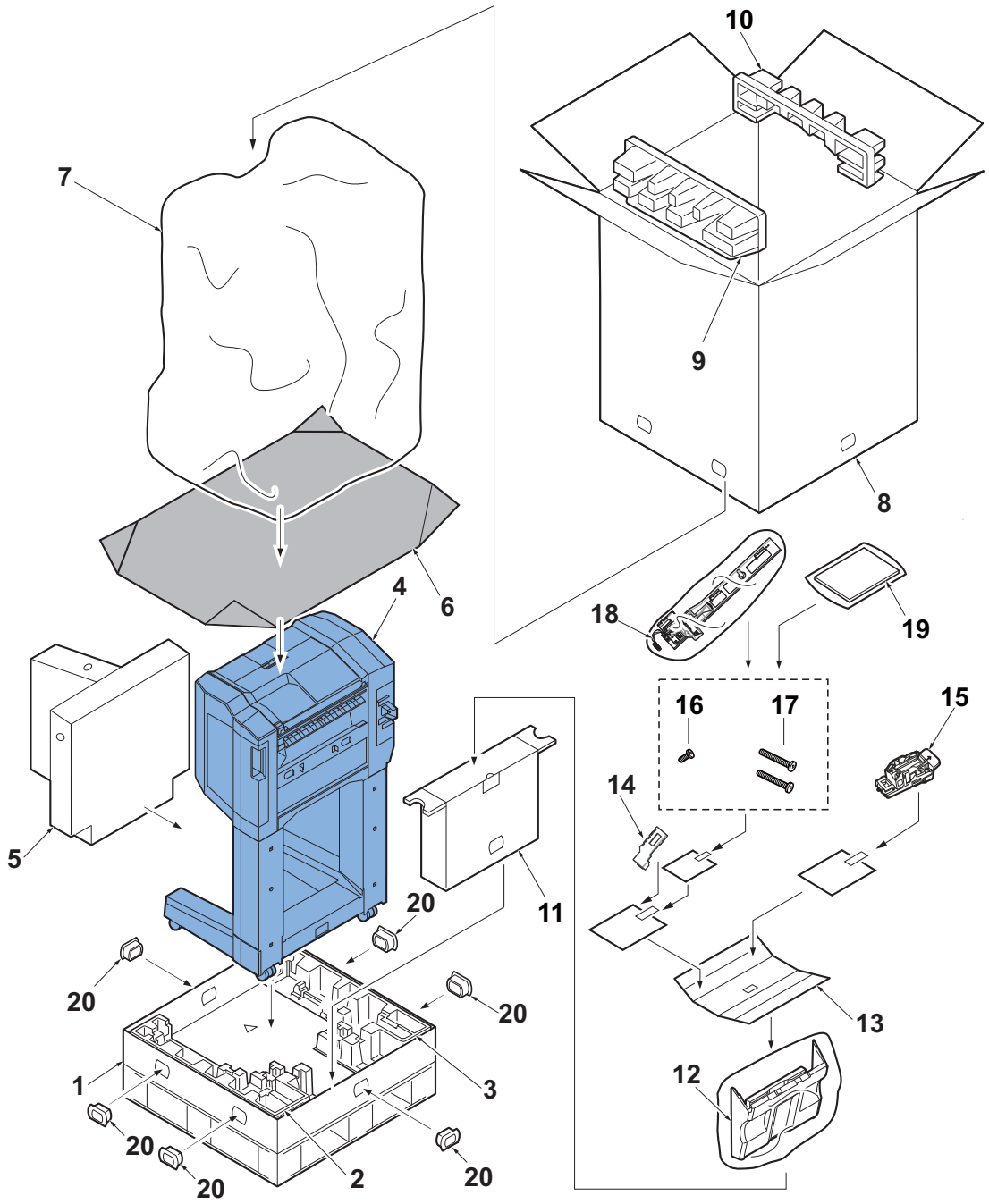

1 Skid	8 Outer case	15 Staple cartridge
2 Front bottom pad	9 Front upper pad	16 Screw (M4x8)
3 Rear bottom pad	10 Rear upper pad	17 Screw (M4x8*)
4 1000-sheets Finisher	11 Right spacer	18 Connecting plate
5 Left spacer	12 Main tray	19 Installation guide
6 Protect sheet	13 Inner pad	20 Hinge
7 Main unit cover	14 Connector cover*	

*: Not used in this model.

(1-9)4,000-sheet Finisher (DF-7140)

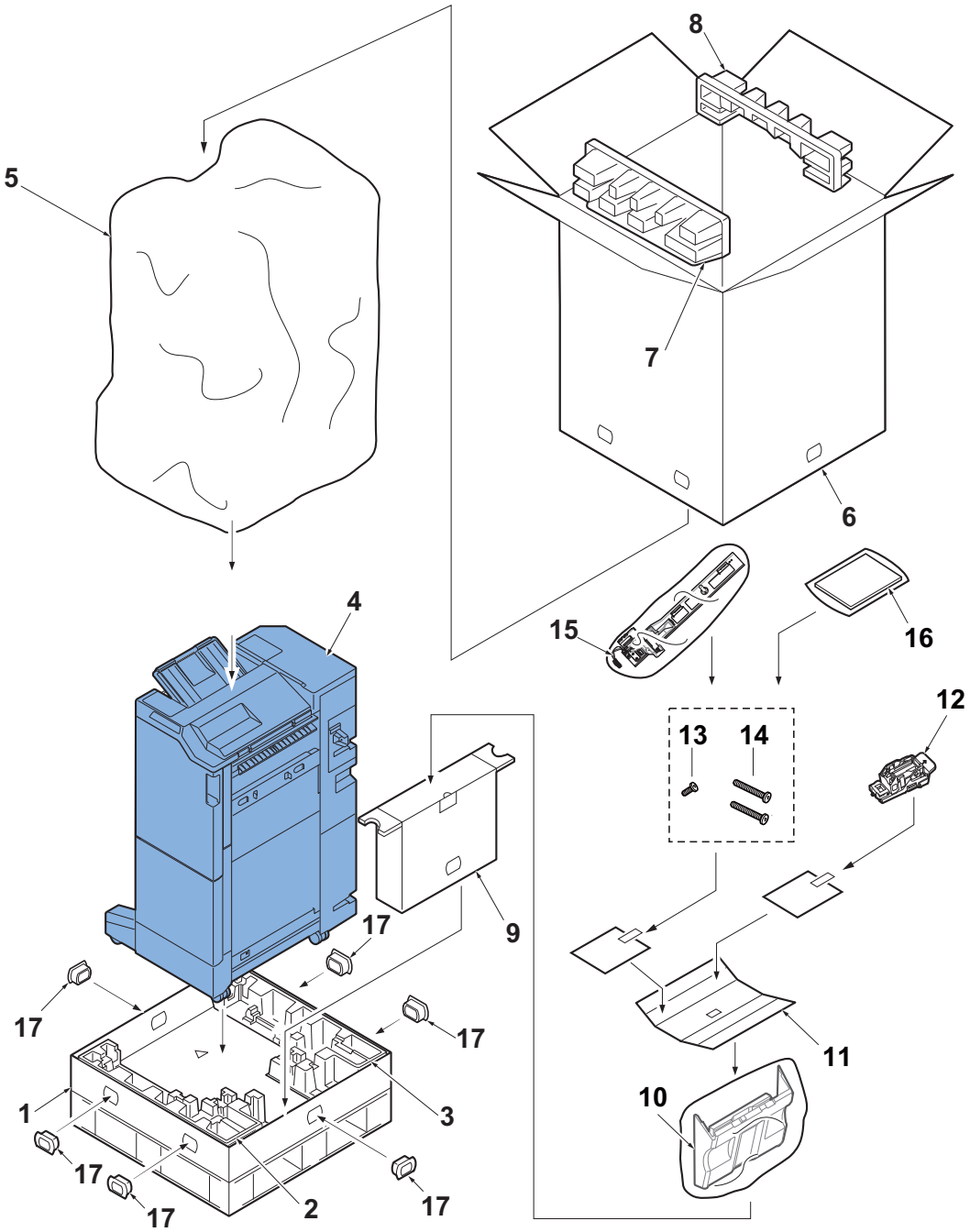

1	Skid	7	Front upper pad	13	Screw (M4x8)
2	Front bottom pad	8	Rear upper pad	14	Screw (M4x20)
3	Rear bottom pad	9	Right spacer	15	Connecting plate
4	4,000-sheets Finisher	10	Main tray	16	Installation guide
5	Main unit cover	11	Inner pad	17	Hinge
6	Outer case	12	Staple cartridge		

(1-10)Mailbox (MT-730(B))

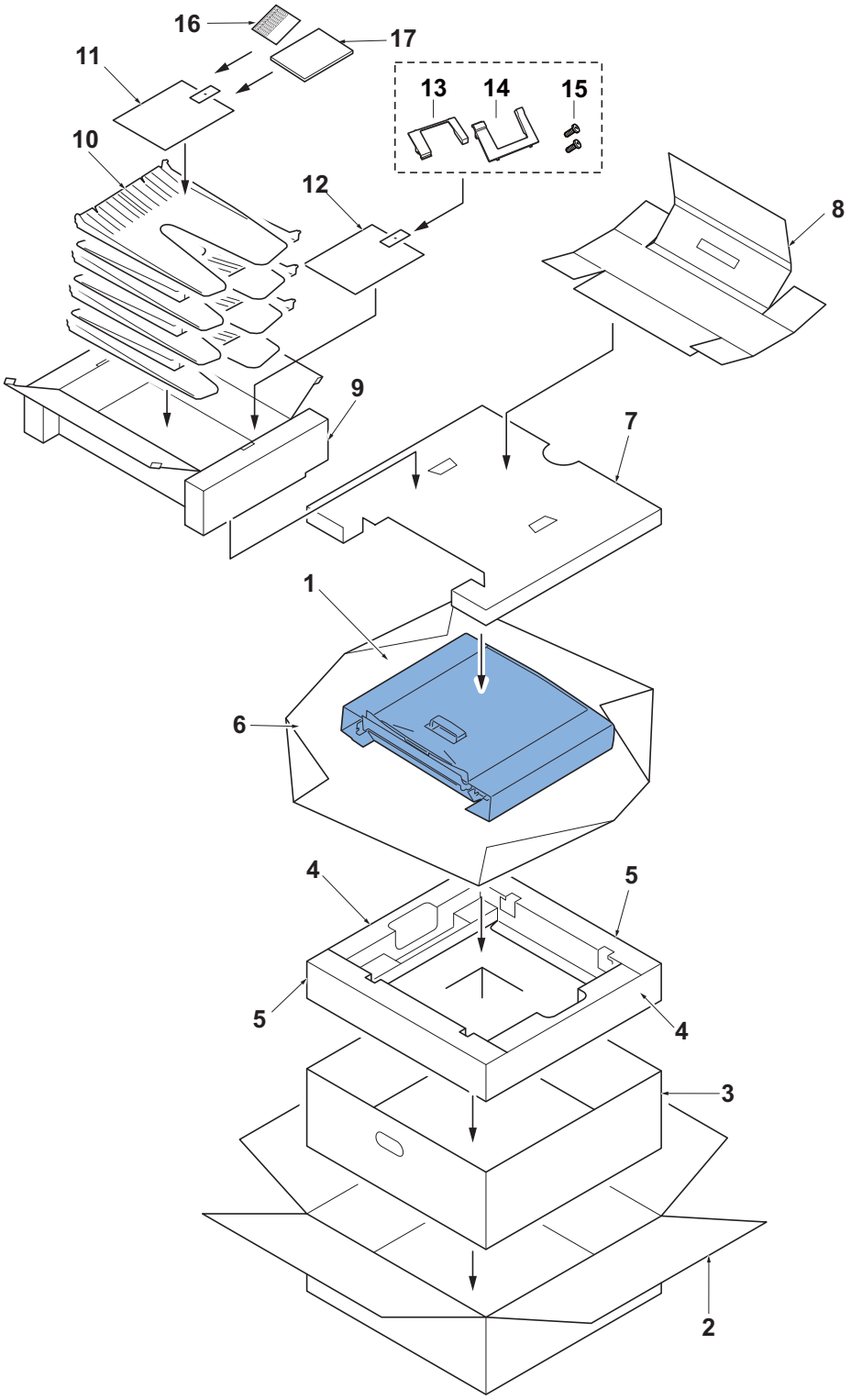

1	Mailbox	7	Bottom pad	13	Upper front cover
2	Outer case	8	Side stay	14	Upper rear cover
3	Inner frame	9	Accessory case	15	Screw (M4x10)
4	Bottom pad	10	Tray	16	Tray label
5	Bottom pad	11	Plastic bag	17	Installation guide
6	Plastic sheet	12	Plastic bag		

(1-11)Booklet folding Unit (BF-730)

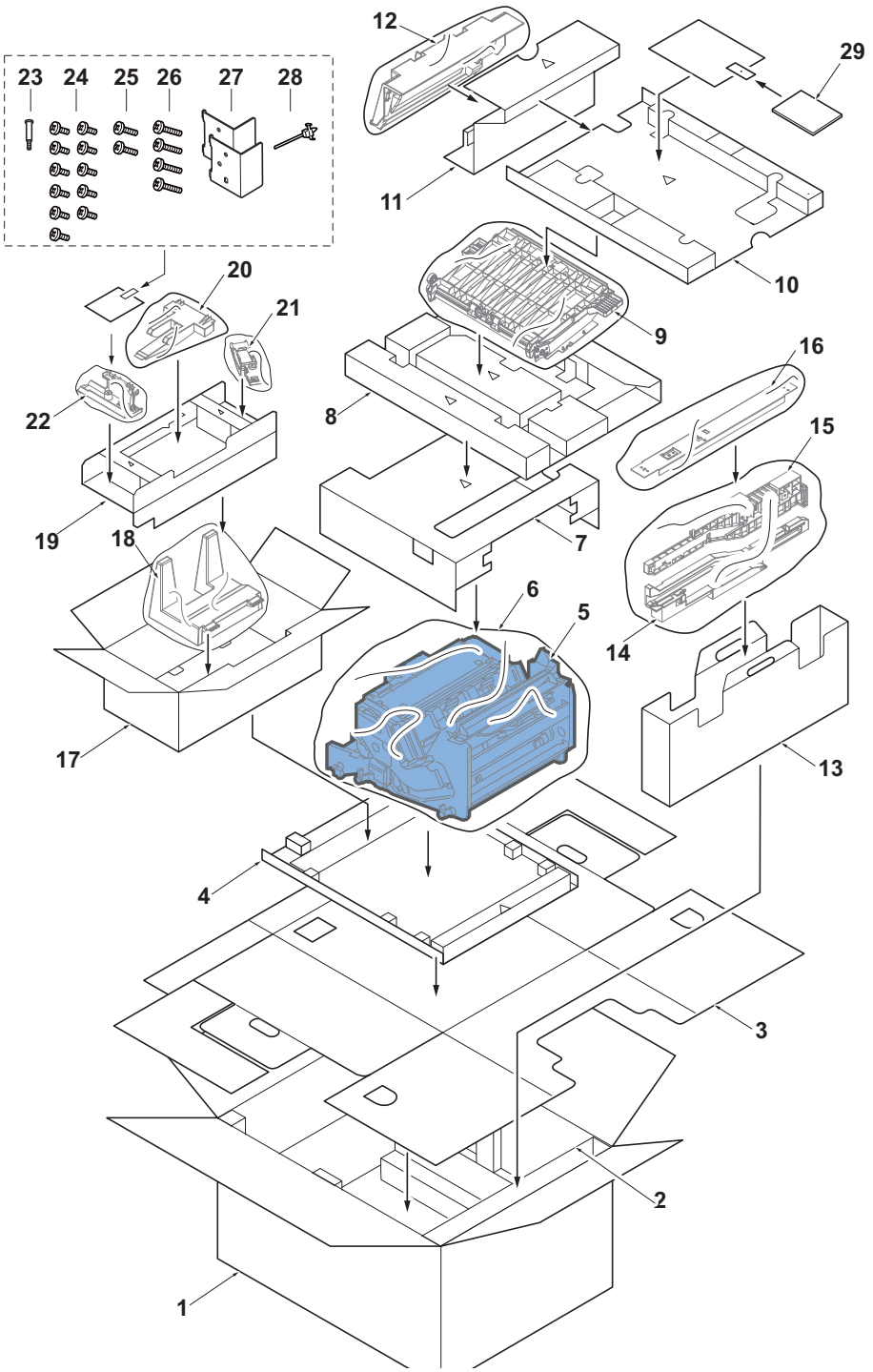

1	Outer case	9	BF bridge Unit	16	Guide	24	Screw (M4x8)
2	Bottom spacer	10	Spacer D	17	Spacer G	25	Screw (M4x10)
3	Spacer A	11	Spacer E	18	Output stock tray	26	Screw (M3x12)
4	Spacer B	12	BF eject tray Unit	19	Spacer H	27	Lock plate
5	Booklet folding unit	13	Spacer F	20	Output stopper	28	Plastic band
6	Plastic sheet	14	Front rail	21	Front side cover	29	Installation guide
7	Top spacer	15	Rear rail	22	Rear side cover		
8	Spacer C			23	Pin		

(1-12)Punch Unit (PH-7A/C/D)

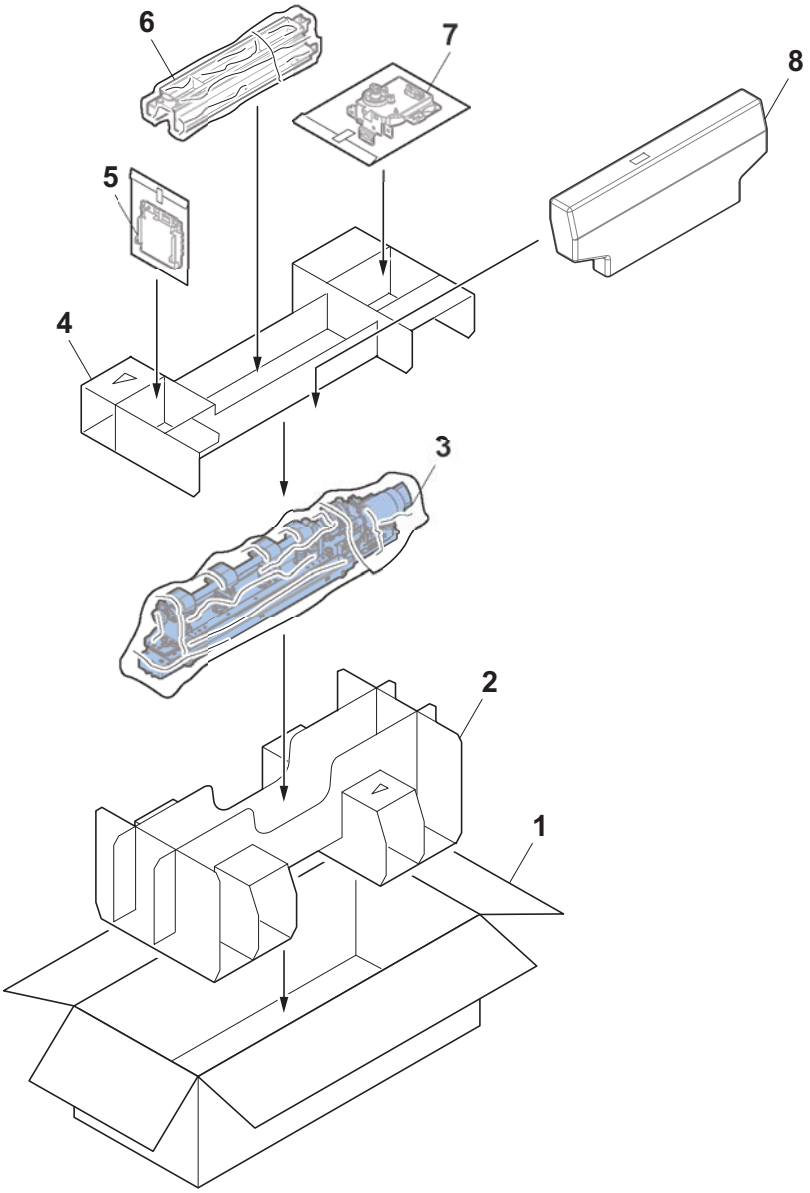

1 Outer case	4 Upper pad	7 Drive unit
2 Bottom pad	5 Punch PWB	8 Waste punch box
3 Punch unit	6 Waste punch box guide	

(1-13)Punch Unit (PH-7100/7120/7130)

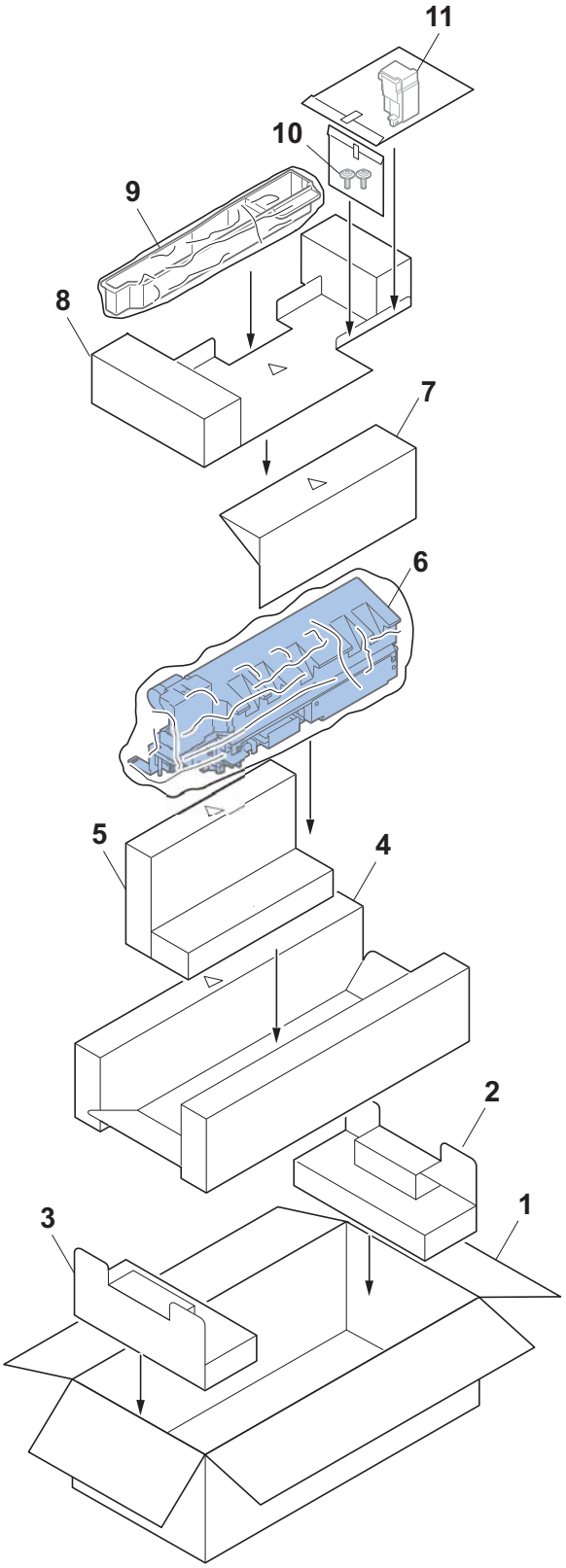

1	Outer case	5	Front bottom pad	9	Waste punch box
2	Right bottom pad	6	Punch unit	10	Screw
3	Left bottom pad	7	Rear upper pad	11	Front right cover
4	Bottom pad	8	Upper pad		

(1-14)100 sheet staple finisher (DF-7150)

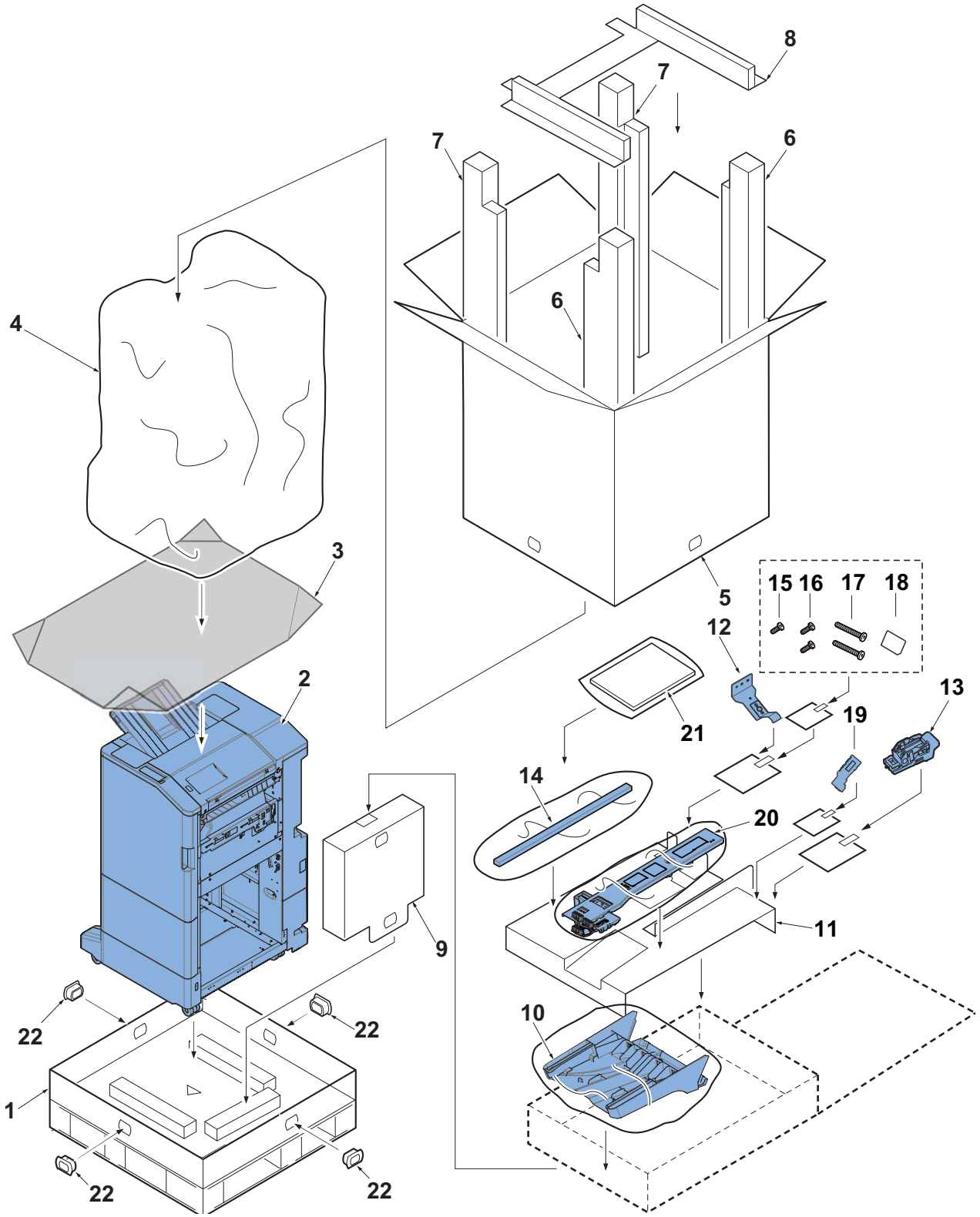

1 Skid
2 Inner finisher
3 Protect sheet
4 Main unit cover
5 Outer case
6 Right stay
7 Left stay
8 Upper pad
9 Right spacer
10 Main tray
11 Inner pad
12 Ground plate*
13 Cartridge
14 Exit guide*
15 Screw (M4x8*)
16 Screw (M4x10)
17 Screw (M4x8*)
18 Connector cover*
19 Tray label*
20 Connecting plate
21 Installation guide
22 Hinge

(1-15)Booklet unit (BF-9100)

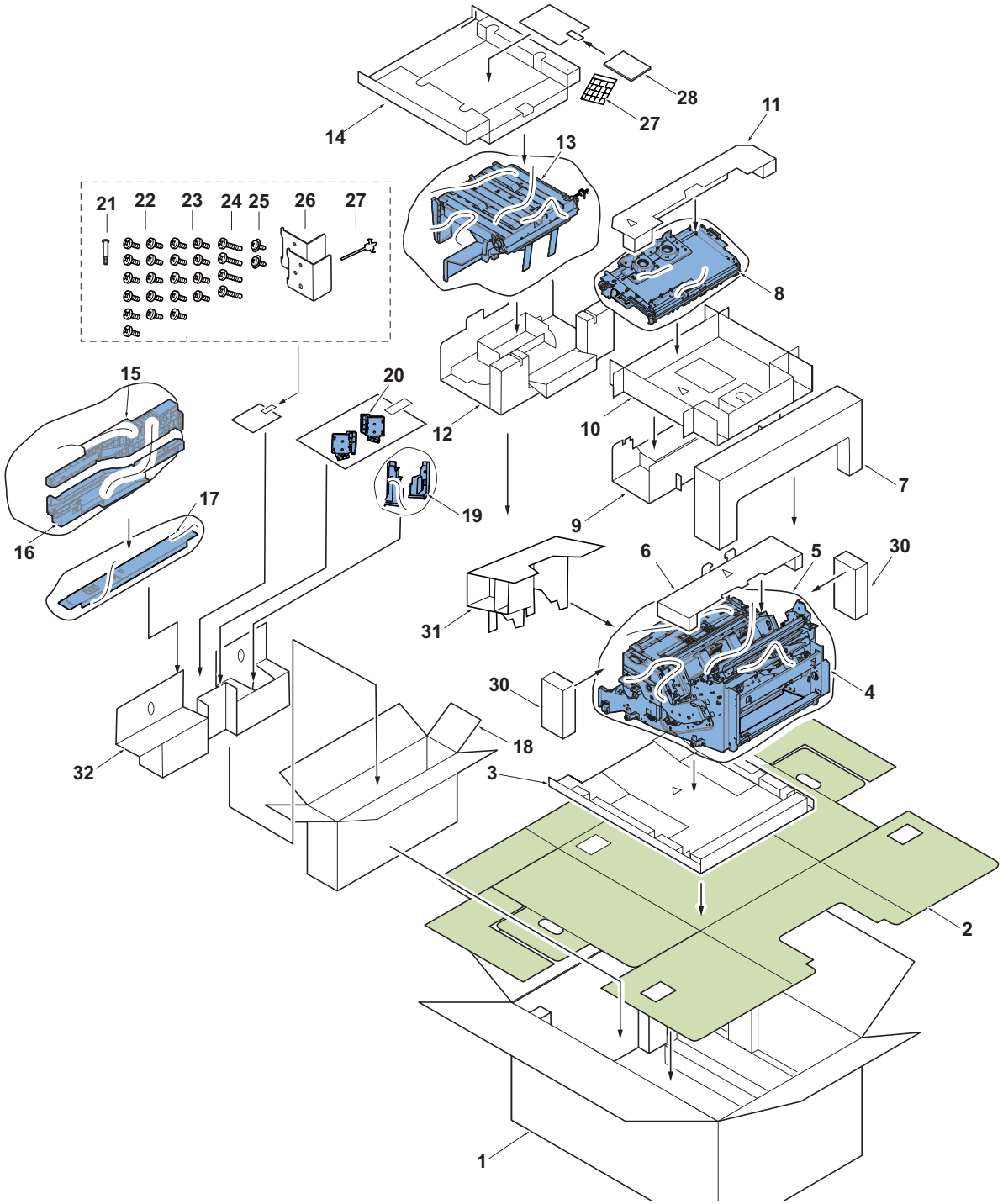

1 Outer case	9 Spacer D	17 Guide	25 Screw (M3x8)
2 Spacer A	10 Spacer E	18 Spacer I	26 Lock plate
3 Spacer B	11 Spacer F	19 Rear side cover	27 Plastic band
4 Booklet folding unit	12 Spacer G	20 Exit tray	28 Installation guide
5 Plastic sheet	13 BF eject Unit	21 Pins	29 Label
6 Top spacer	14 Spacer H	22 Screw (M4x8)	30 Spacer J
7 Spacer C	15 Front rail	23 Screw (M4x10)	31 Spacer K
8 BF bridge Unit	16 Rear rail	24 Screw (M3x12)	32 Spacer L

*:120V/230V only

(1-16)Inserter (IS-7100)

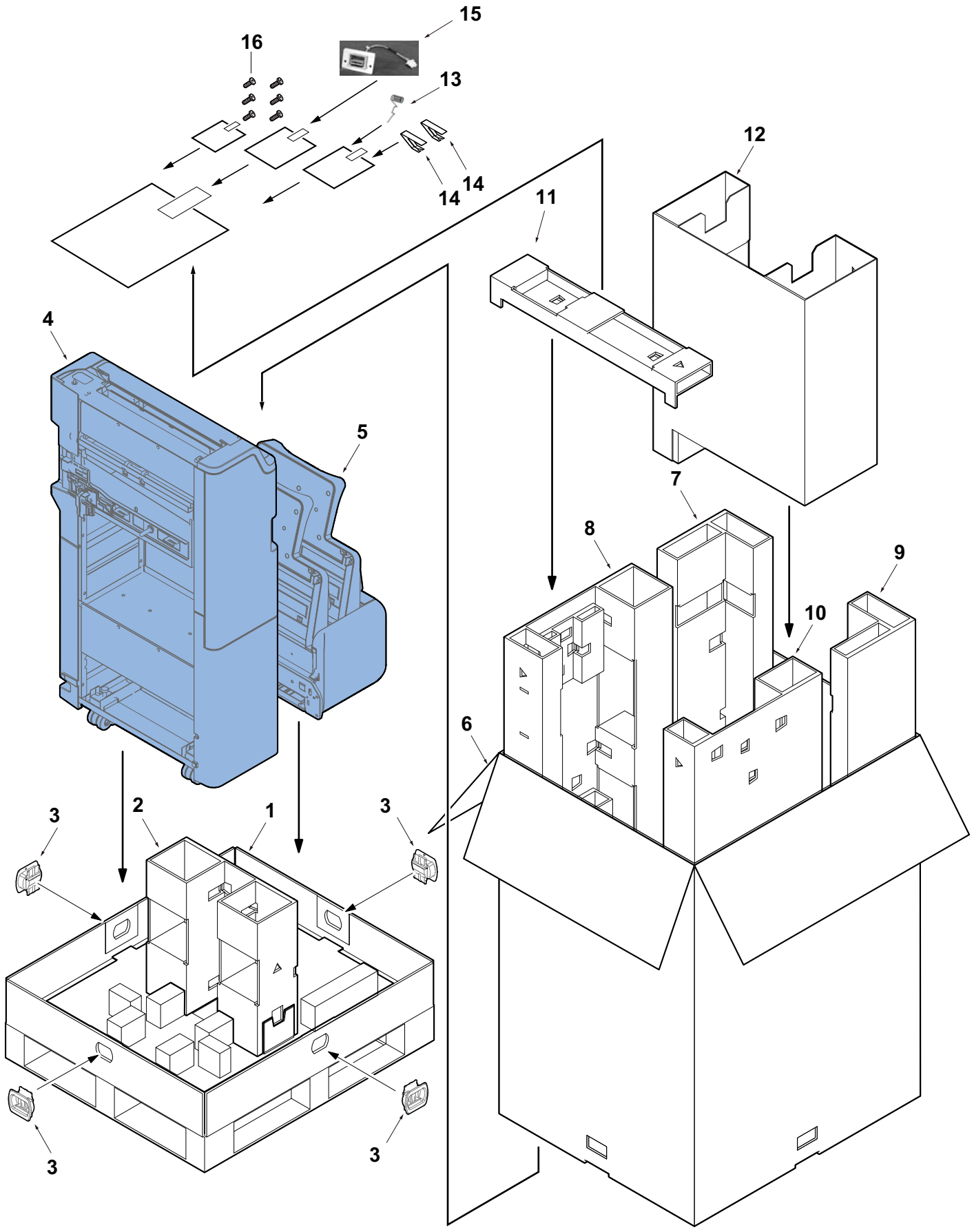

1	Skid	6	Outer case	11	Spacer B	16	Screw (M4x8)
2	Spacer A	7	Rear right pad	12	Spacer C		
3	Hinge	8	Rear left pad	13	Ground spring		
4	IS conveying unit	9	Front right pad	14	Ground plate		
5	IS feeding unit	10	Front left pad	15	Communication cable		

(1-17)Attachment kit (AK-7120)

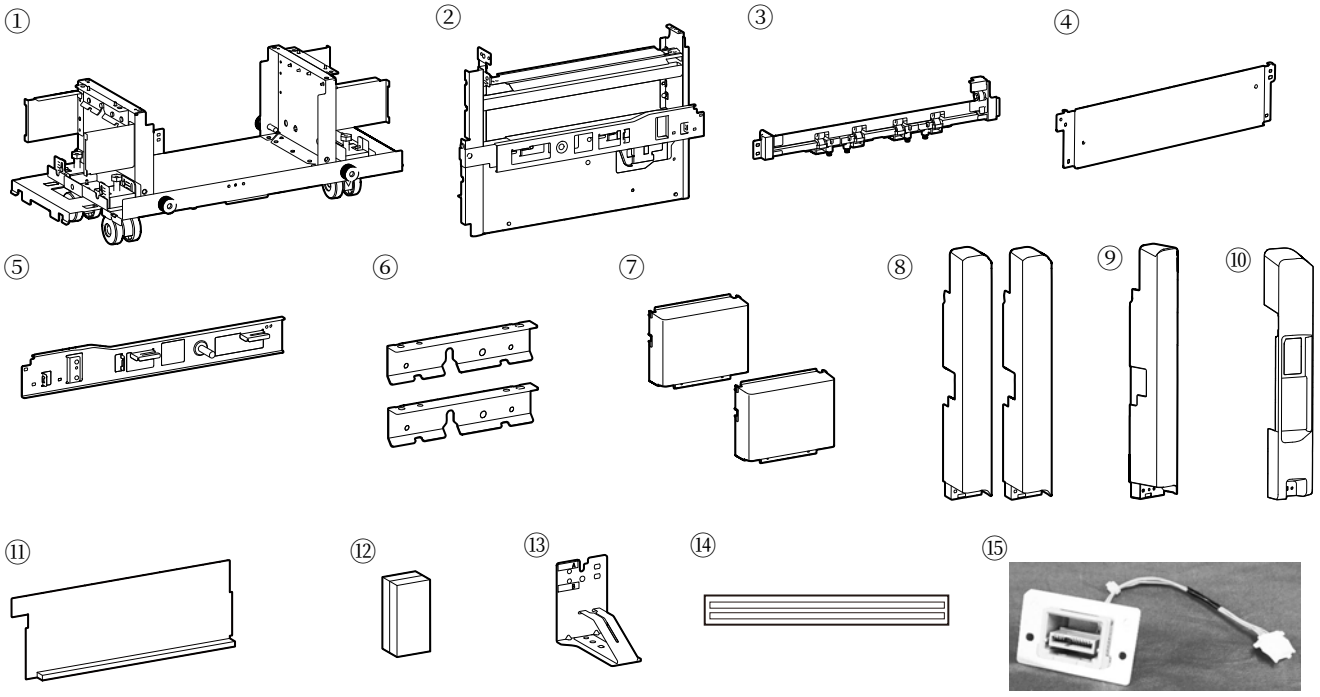

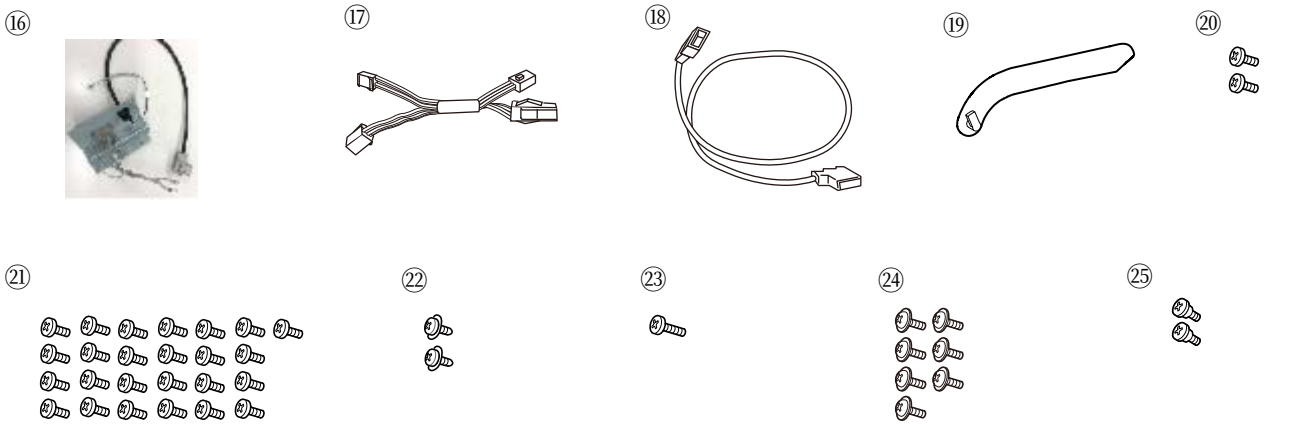

1 Adjuster A	7 Cover B	13 Ground plate	19 DP stopper
2 Adjuster B	8 Cover C	14 seal	20 Screw (M3x8)
3 Paper entry guide	9 Cover D	15 Communication cable A	21 Screw (M4x8)
4 Cover A	10 Cover E	16 Communication cable B	22 Screw (M4x10 TP)
5 Connecting plate	11 Cover sheet	17 Communication cable C	23 Screw (M4x10)
6 Rock plate A	12 Sponge	18 Communication cable D	24 Screw (M3x8 TP)
			25 Stud screw

(1-18)Z-folding unit (ZF-7100)

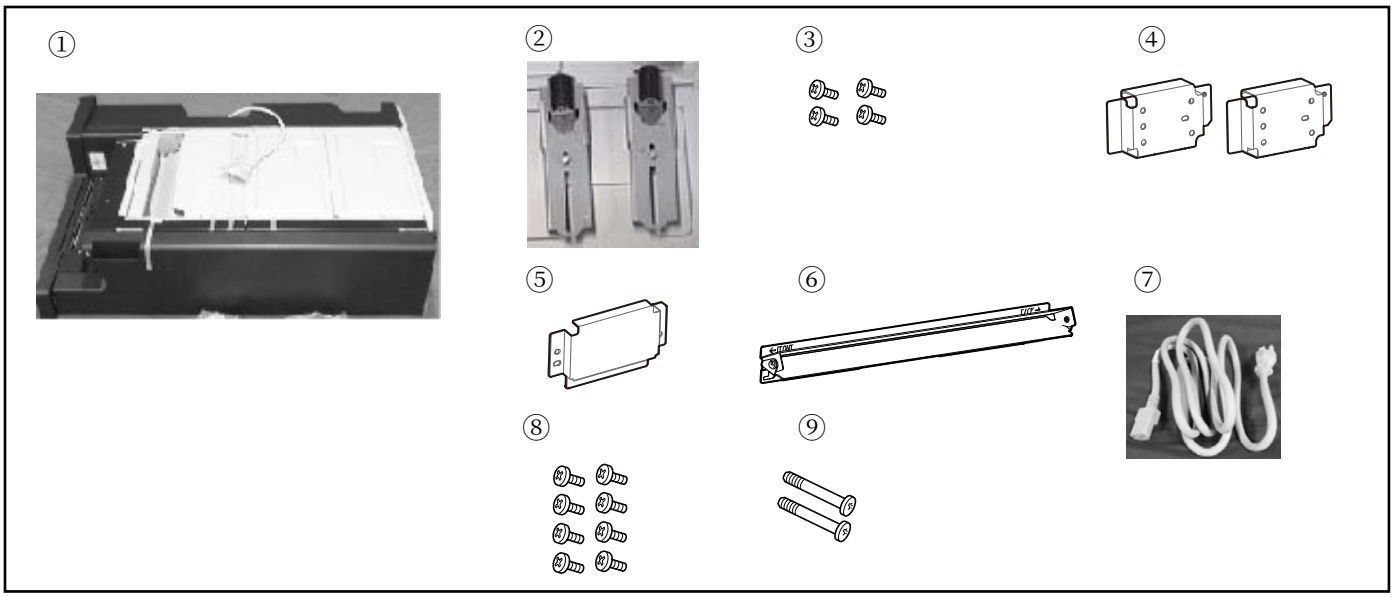

1 Z-folding unit	4 Spacer A	7 Communication cable
2 Supporter	5 Spacer B	8 Screw (M4x8)
3 Screw (M3x8)	6 Paper entry guide	9 Stud screw

(2)Optional unit installation

Attach optional units to the main unit by following the installation procedures.

	Product name	Low-end model	High-end model	Installation guide Link
PF	PF-7140 (500x2 Paper Feeder)	x	x	PF-7140
	PF-7150 (1500x2 Paper Feeder)	x	x	PF-7150
	PF-7120 (3000 Side Paper Feeder)	x	x	PF-7120
DP	DP-7150 (Document Processor (Reversing duplex scanning))	x	x	DP-7150
	DP-7160/7170 (Document Processor (Dual scanning))	x	x	DP-7160/DP-7170
DF	DF-7100 (Inner Finisher)	x	x	DF-7100
	PH-7100 / 7120/ 7130(Punch unit for DF-7100)	x	x	
	AK-7110 (Attachment Kit)	x	x	AK-7100/AK-7110
	DF-7140 (4000-sheet Finisher)	x	x	DF-7140
	Mailbox(B) (Mailbox)	x	x	MT-730(B)
	BF-730 (Center-folding Unit)	x	x	BF-730
	DF-7120 (1,000-sheet Finisher)	x	x	DF-7120
	DF-7150 (100 sheet staple finisher)	-	x	DF-7150
	BF-9100 (Booklet for DF-7130)	-	x	BF-9100
	PH-7 (Punch unit for DF-7110/7120/7130)	x	x	PH-7A/PH-7B/ PH-7C/PH-7D
JOB SEPA	JS-7100 (Job Separator Tray)	x	x	JS-7110
Fax kit	FAX System 12	x	x	FAX System12
Print kit	Printing System 17*	x	x	Printing System 17

*:120V/230V only

2 - 4 Installing the optional equipment

(1)SD/SDHC memory card

Reading the SD/SDHC memory Card

The contents of the SD/SDHC memory card are read by the main unit after turning the power on.

SD/SDHC memory card installation

1 Turn off the main unit and disconnect the power cord and all interface cables.

- Before inserting the memory card, make sure that the power switch is off.

2 Remove the screw (a) (M3x8).

3 Release the hook (b) in the direction of the arrow and then remove the SD card cover (c).

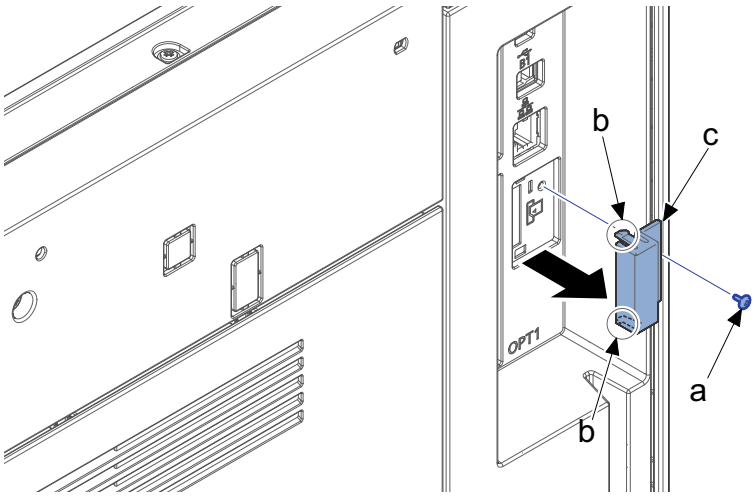

4 Install an SD/SDHC memory card (a) in the memory card slot (b).

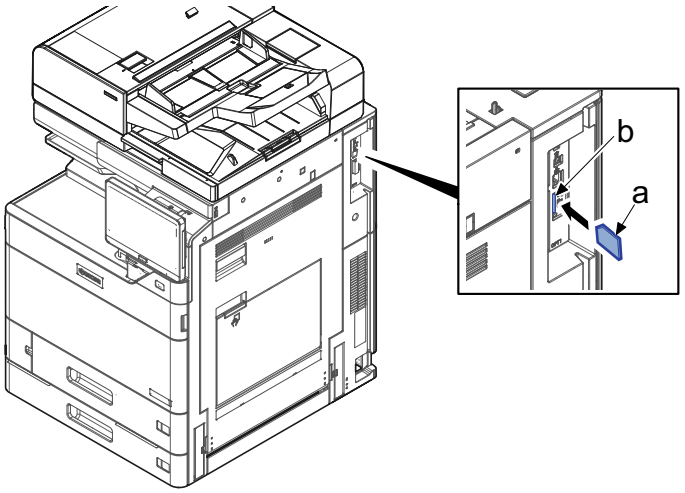

5 Reattach the covers.

Formatting an SD/SDHC Memory Card

New SD/SDHC card has to be formatted with main unit before using.

- Formatting will delete all existing data on the SD card.
  If you have installed an application, do not format the SD card. The application may be deleted. Format with PC in advance or prescribe command

(2)Hard disk (HD-15): 120 V model is Standard
(3)Hard disk (HD-16)

1 Turn off the main unit and disconnect the power cord and all interface cables.

2 Remove a screw (a) (M3x10) and then remove the rear upper cover (b) by sliding to the direction of the arrow.

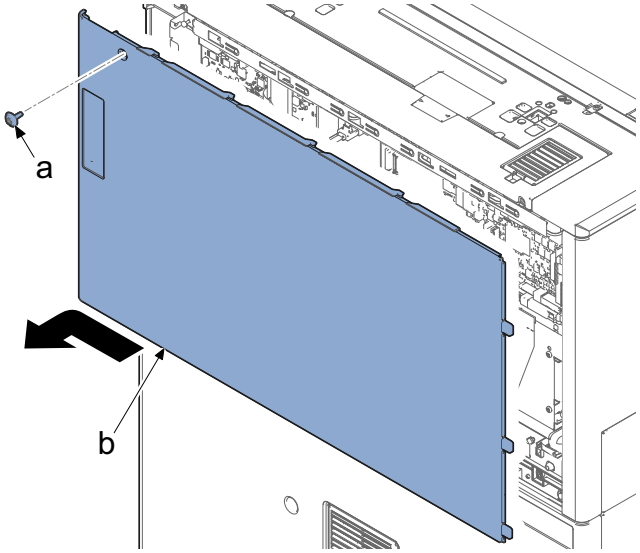

3 Two hooks (a) of the mounting plate to the opening of the main body, and install the hard disk (b) with 2 screws (c) (M3 x 8).

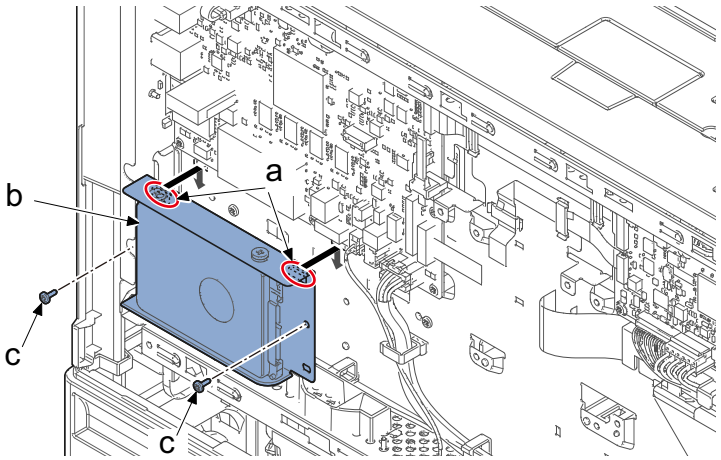

4 Connect the connector of two cables (a) to the connectors on the hard disk (b) and the main PWB (c).

5 Fix two cables (a) with the wire saddle (d).

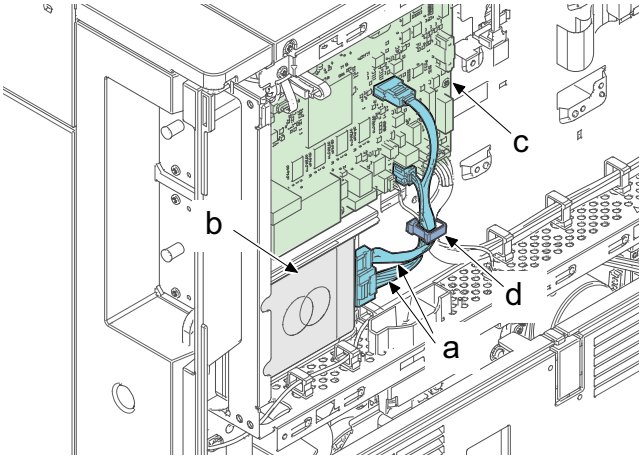

6 Reattach the parts to the original position.

- Formatting will start automatically at the first start-up when new HDD is installed.
- In case that Fax box has data, the memory LED blinks because of forming a preview image into the HDD after restart.

Formatting a hard disk

1 Input "10871087" using the numeric keys to enter the maintenance mode.

2 Input "024" using the numeric keys and press [Start] key.

3 Select [Format].

4 Select [Full].

5 Select [Execute].

6 Press [Start] key to initialize.

7 Turn the power switch off then on. Wait more than 5 seconds between the power off and on.

- Hard disk formatting is required for used HDDs or internal data erasure.
  Formatting will delete all existing data on the HDD.

(4)Gigabit Ethernet extension kit (IB-50)
(5)Wireless LAN interface (IB-51)

1 Turn off the main unit and disconnect the power cord and all interface cables.

2 Remove two screws (a) (M3x8) and then remove the option slot cover (b).

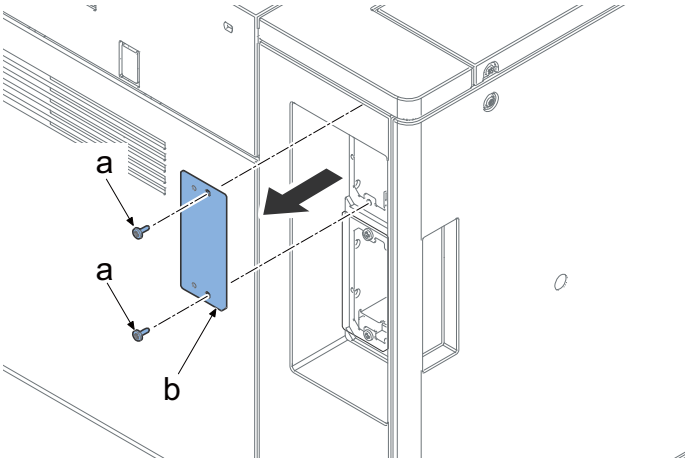

3 Insert the PWB unit (b) straight into the option slot (c).

4 Secure the PWB unit (b) with two screws (a) (M3x8) that removed in step 2.

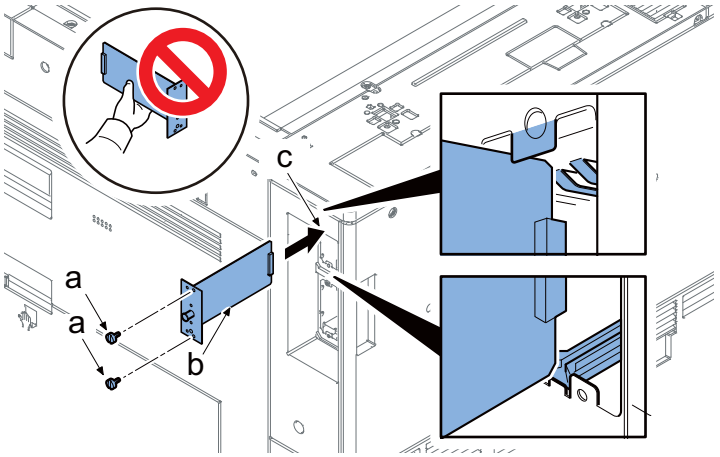

- Install it in the upper slot.

(6)Wireless LAN interface (IB-37/IB-38)

Wireless LAN interface (IB-37) (1503T80UN0)	1 pc
Wireless LAN interface (IB-38) (1503V10UN0)	1 pc

Accessories

- PWB unit 1 pc
- USB cable 1 pc

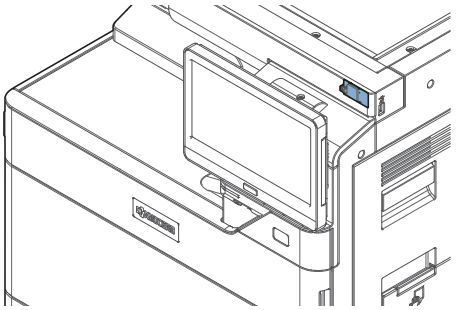

1 Turn the power switch off and disconnect the power plug.

2 Get the operation panel (a) straight.

3 Insert a finger into the aperture (c) of the ISU front right cover (b) and pull it to the front side then remove four lower hooks (d). Unlatch six upper hooks (e) in the direction of the arrow then take it away.

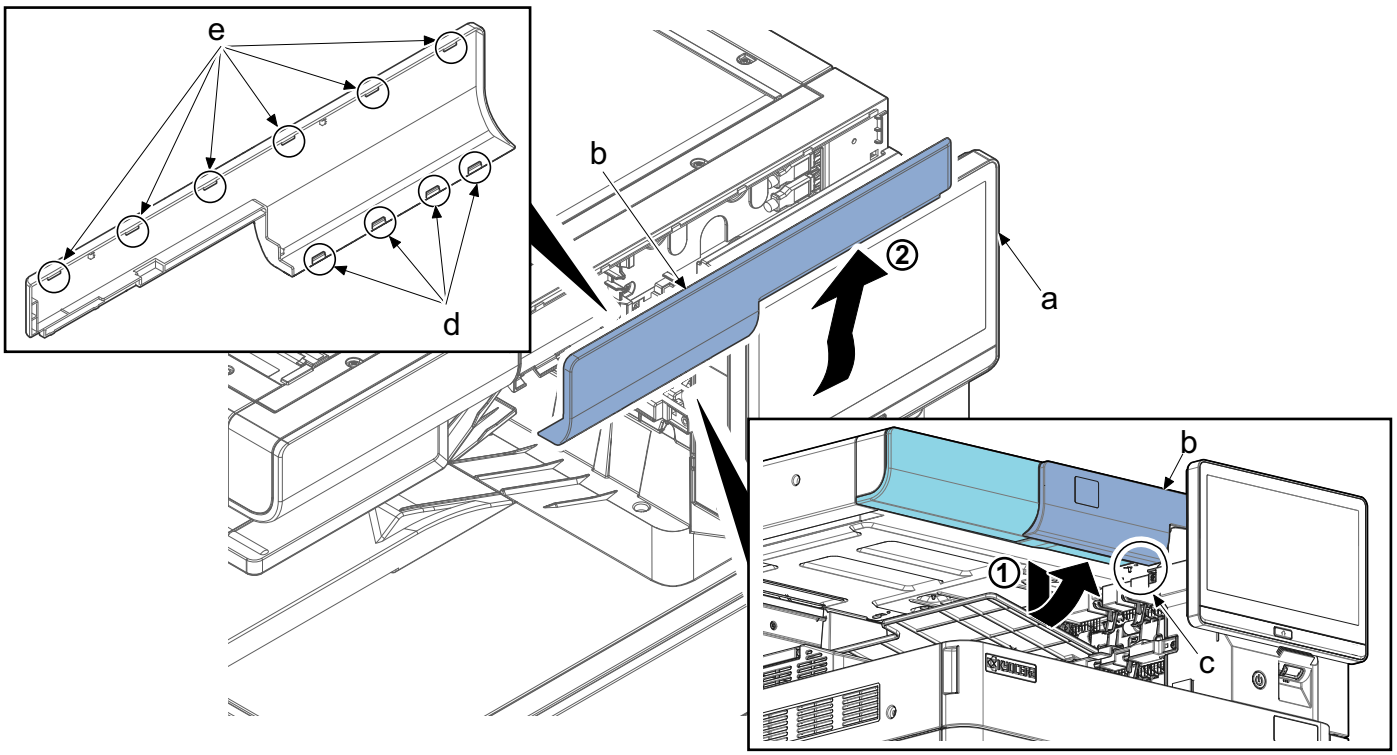

4 Remove the screw (a) (M3x8).

5 Release two ribs (d) with a flat-blade screwdriver (c).

6 Detach the exit upper cover (b) in the direction of the arrow.

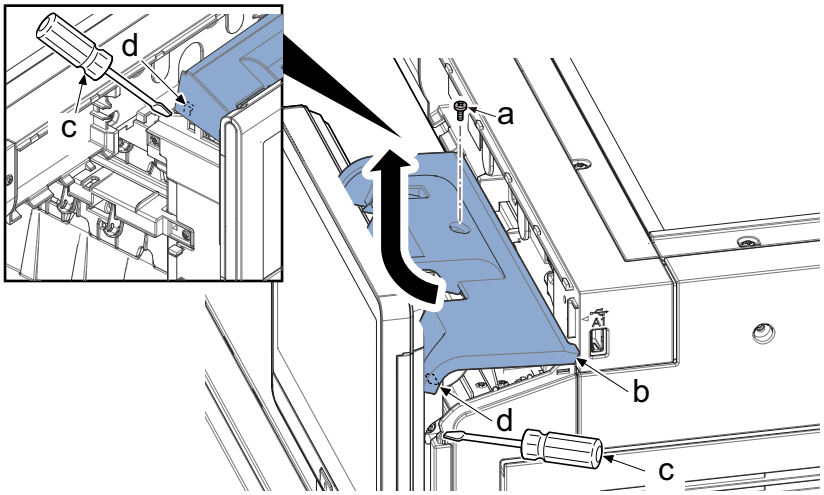

7 Connect the USB connector (b) to the Wi-Fi board (a).

8 Attach the Wi-Fi PWB (a) to the main body.

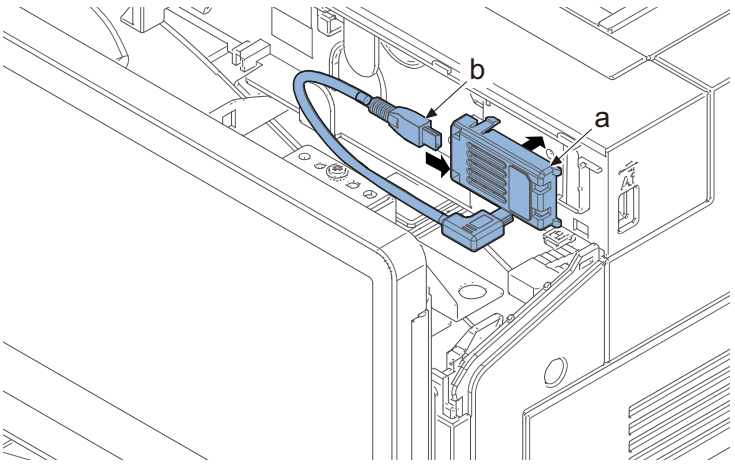

9 Insert the upper exit cover (b) in the direction of the arrow and secure it in the original position with the screw (a) (M3×8).

- Align the upper exit cover (b) to the machine front side and secure the screw.

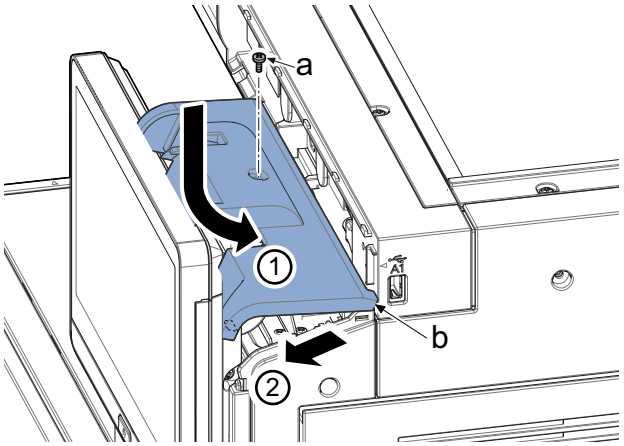

10 Attach the IC card reader cover. Latch six upper hooks (b) and then four latch lower hooks (e) by rotate it. Reattach the ISU front right cover in the original position.

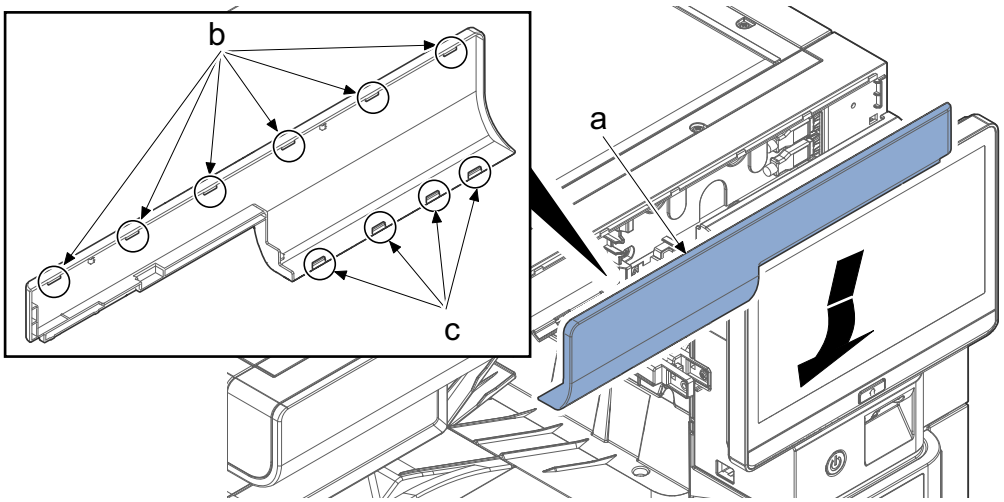

(7)Document table (DT-730(B))

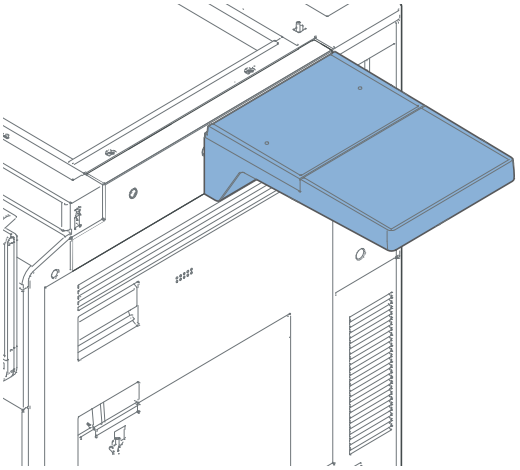

Document table DT-5100 (1902LC0UN2)	1 pc
Accessories	
• Tray stay	1 pc
• Tray mounting plate	1 pc
• Tray cover	1 pc
• Tray lower cover	1 pc
• Tray fixing plate	1 pc
• Sheet	2 pcs
• Pins	2 pcs
• Nut M4	2 pc
• Screw (M4x8 screw with the binding head)	7 pc
• Screw (M4x14 screw with the binding head)	2 pcs

1 Turn the power switch off and disconnect the power plug.

2 Open the right cover (a).

3 Remove two screws (b) (M3x8).

4 Detach the right upper cover (c) in the direction of the arrow.

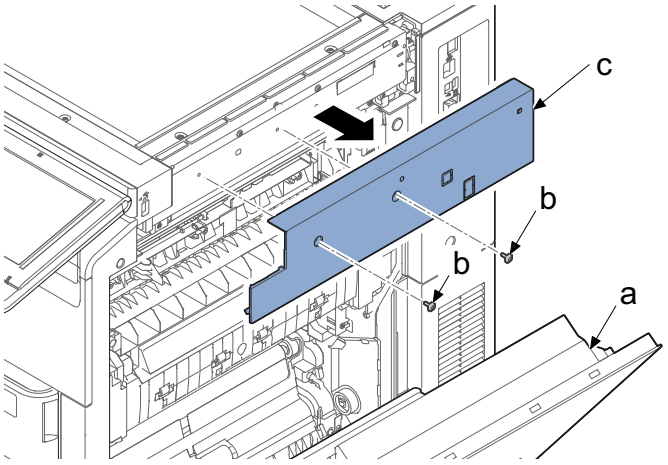

5 Insert two nuts in the back side of the right upper cover (a).

6 Attach the tray stay (d) to the right upper cover (a) with two screws (c) (M4×14).

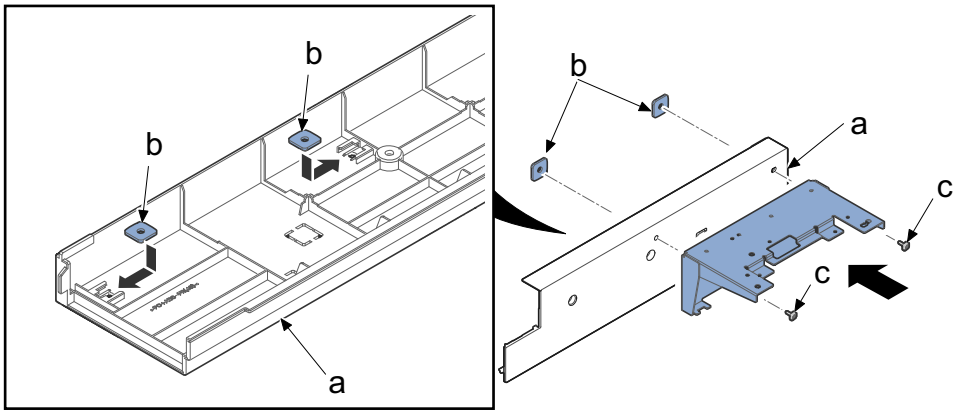

7 Reattach the right upper cover to the original position in the main unit.

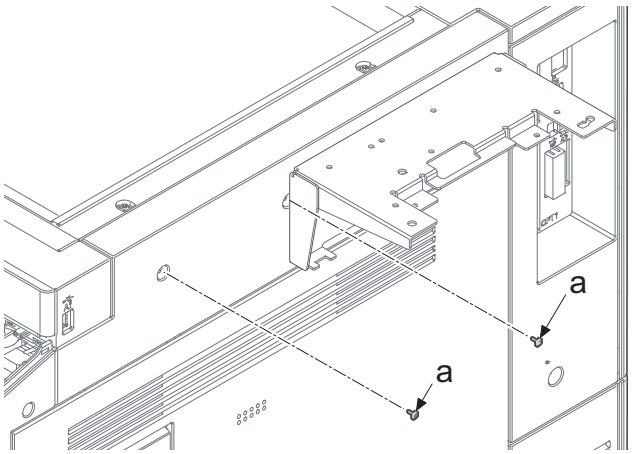

8 Insert the mounting plate (a) into the tray stay (B) and secure it with two screws (C) (M4×8).

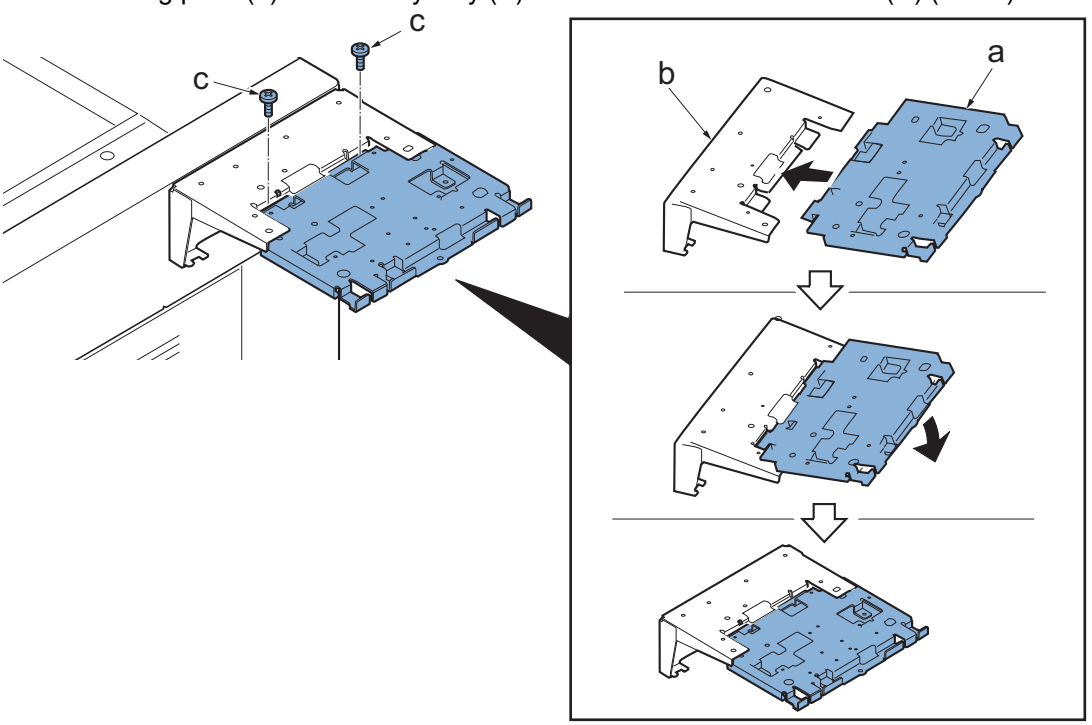

9 Attach the tray cover (b) to the tray stay (c) with four screws (a) (M4×8).

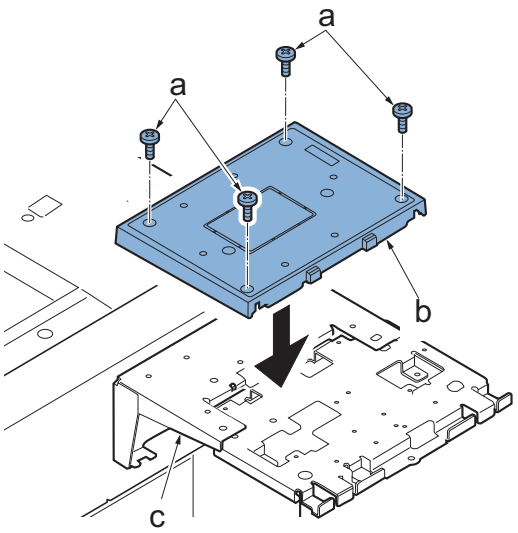

10 Attach the tray lower cover (a).

11 Secure the tray lower cover (a) by two pins (b).

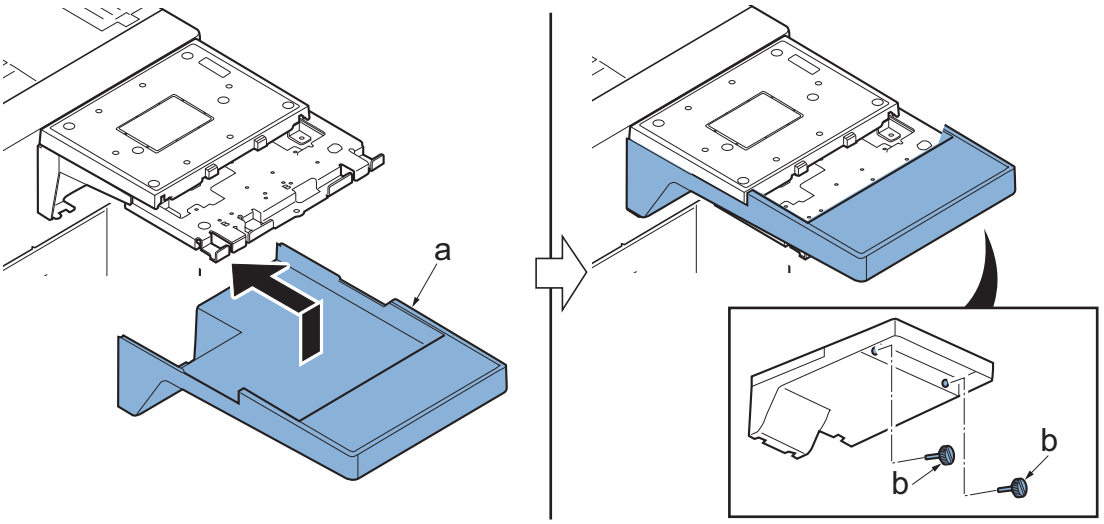

12 Affix the two sheet (b) on the document table (a).

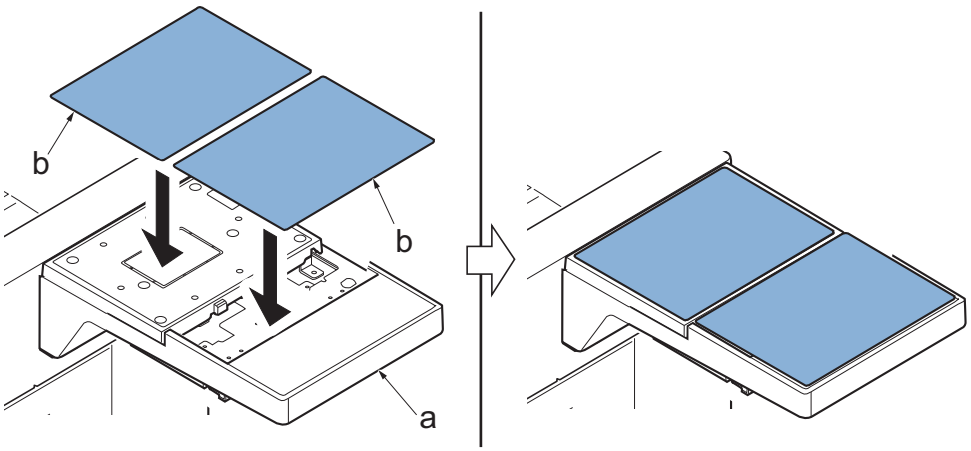

(8)Numeric Keypad (NK-7120): 220 V to 240V model
(9)Numeric Keypad (NK-7130): 120 V model

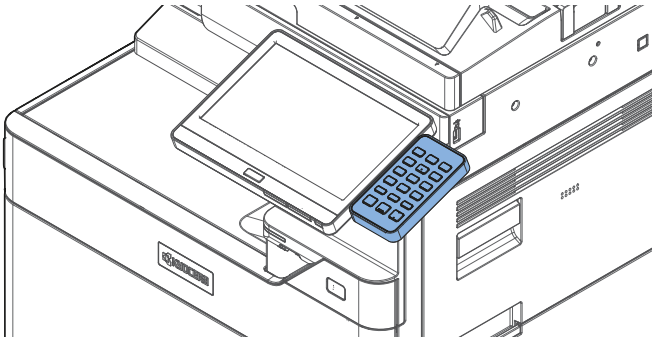

Numeric Keypad NK-7120 (1903T00UN0) NK-7130 (1903T00US0)	1 pc

Accessories

• Numeric Keypad	1 pc
• Numeric Keypad cover	1 pc
• Screw (M3x8)	2 pc
• Label	1 pc

1 Turn the power switch off and disconnect the power plug.

2 Remove the screw (b) (M3x8) from the operation unit (a).

3 Release two hooks (c), and then remove the operation unit lid (d) in the direction of the arrow.

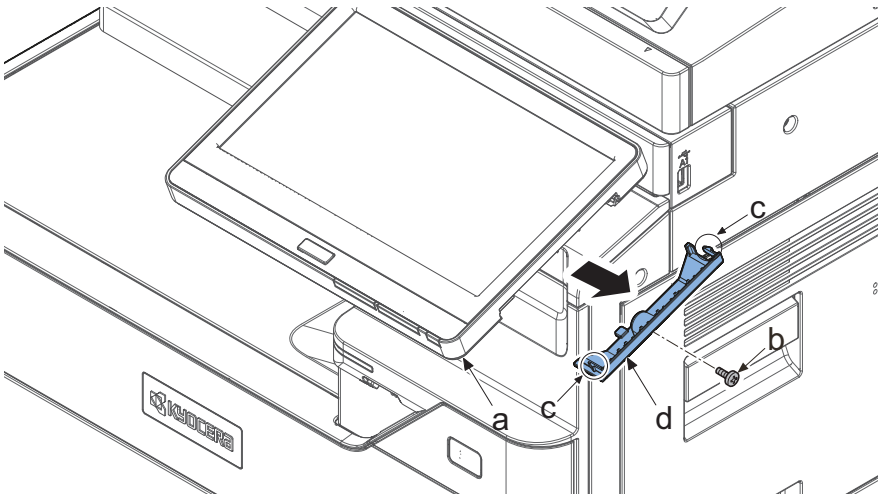

4 Connect the connector (b) of the numeric keypad (a) to the connector (c) of the operation unit.

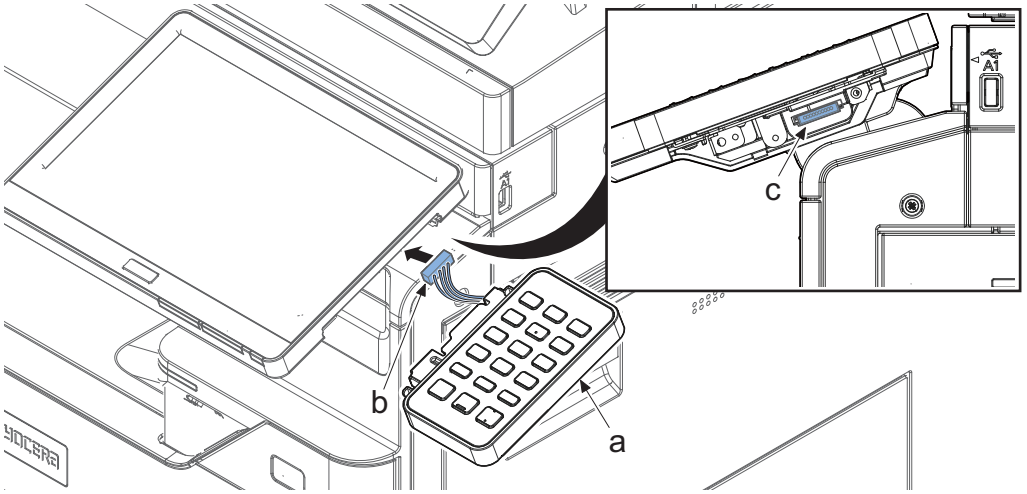

5 Latch two hooks (b) on the cut-out (c) of the operation unit, and then attach the numeric keypad (a) with two screws (d) (M3x8).

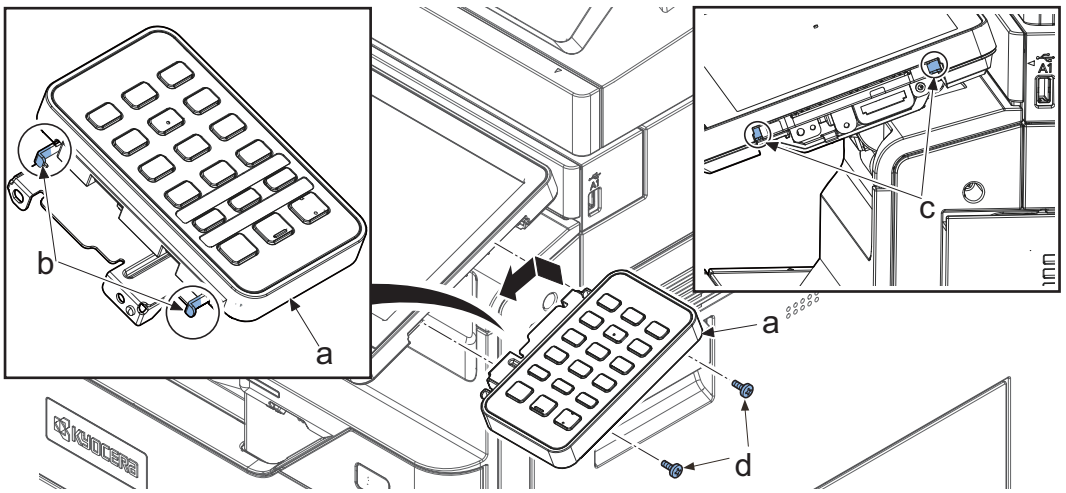

6 Slid the cover (a) in the direction of the arrow and latch two hooks (b), and secure the screw (c)(M3x8) that removed in step 2.

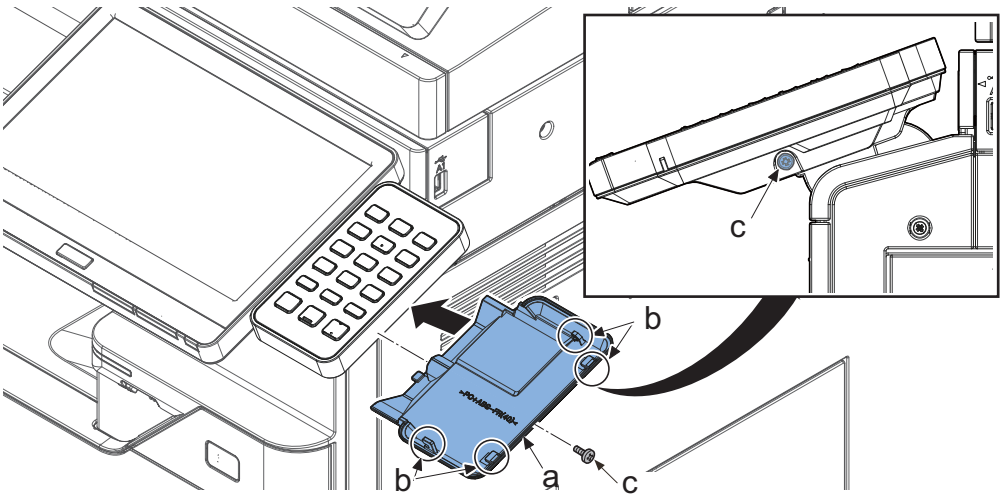

7 Affix the label (b) on the numeric keypad (a).

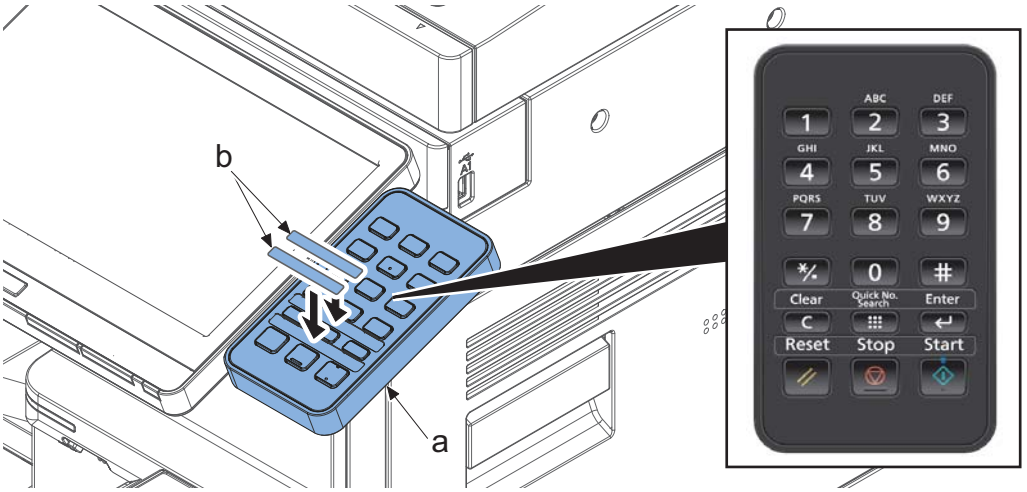

IMPORTANT

Check if shape of label and position are same and affix the label.

(10)ID card reader

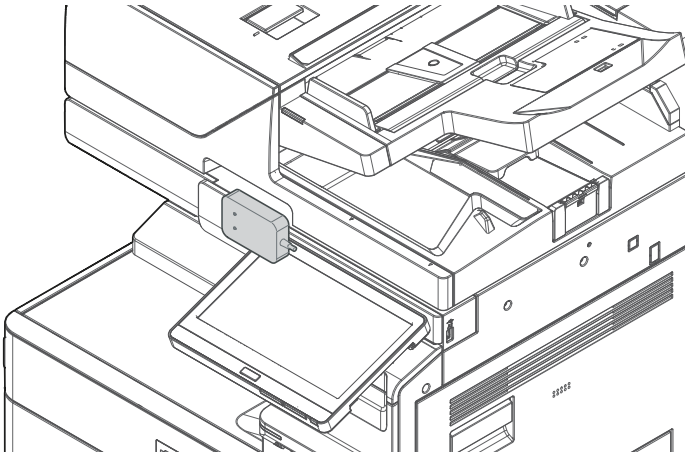

Accessories

- Label 1 pc

IC card reader holder installation requires the following parts.

- Sponge (302N40446*) 2 pc
- hook-and-loop fasteners A (303LL0253*) 2 pcs
- hook-and-loop fasteners B (303MX0202*) 2 pcs

A and B is a pair.

1 Turn the power switch off and disconnect the power plug.

2 Get the operation panel (a) straight.

3 Insert a finger into the aperture (c) of the ISU front right cover (b) and pull it to the front side then remove four lower hooks (d). Unlatch six upper hooks (e) in the direction of the arrow then take it away.

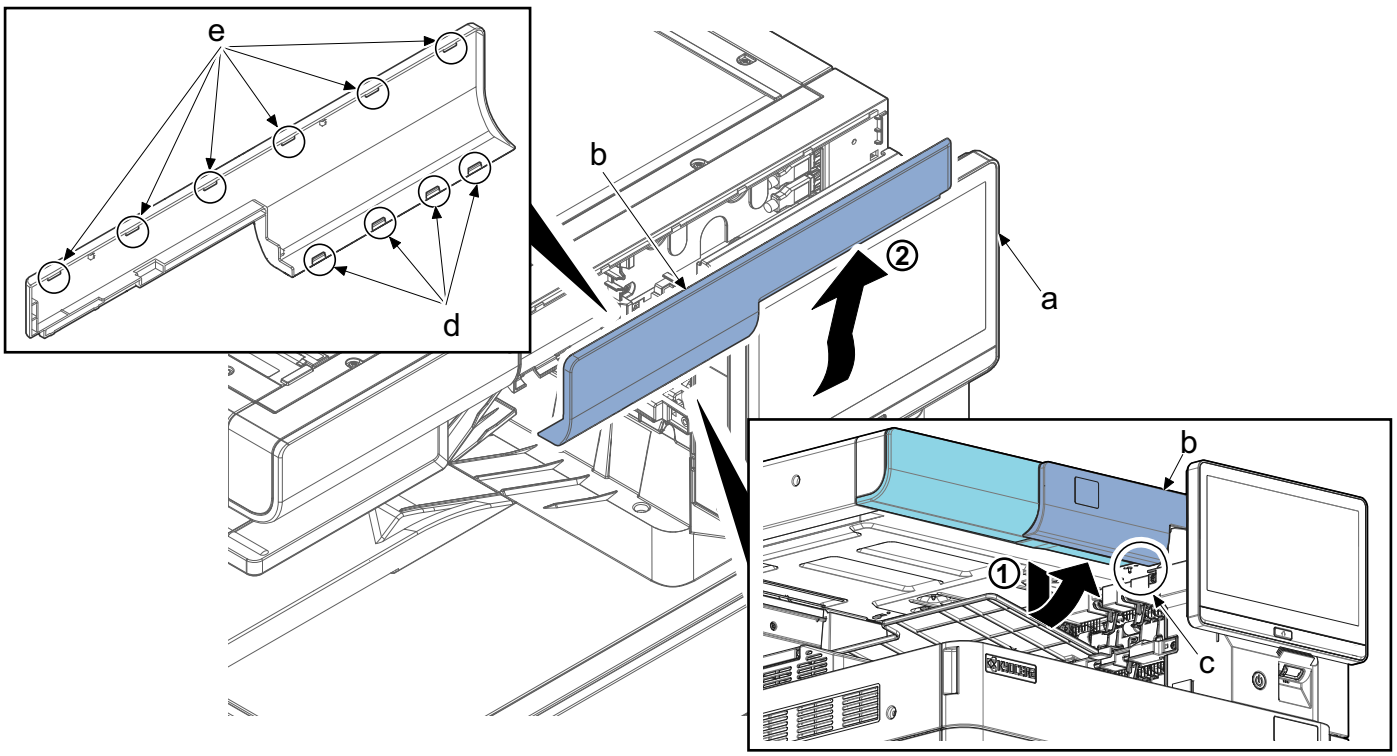

4 Remove the screw (a) (M3x8).

5 Release two ribs (d) with a flat-blade screwdriver (c).

6 Detach the exit upper cover (b) in the direction of the arrow.

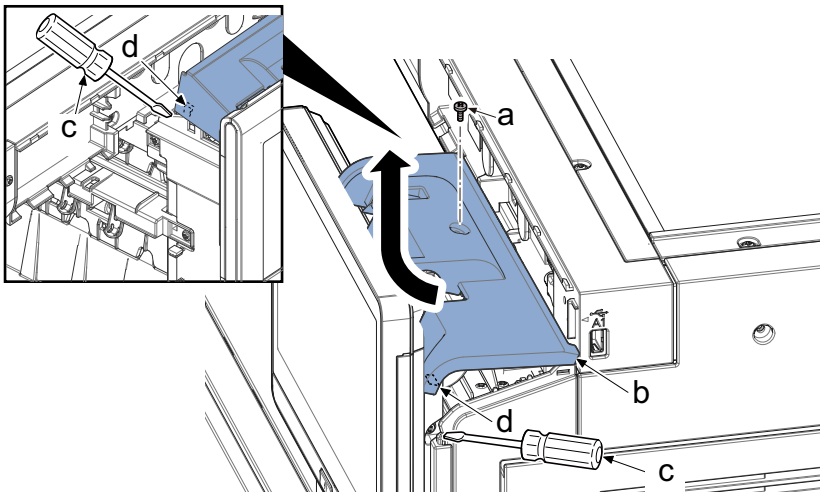

7 Affix a pair of hook-and-loop fasteners (b) to holder (a) on the main unit.

8 Affix card reader (c) to the hook-and-loop fasteners (b).

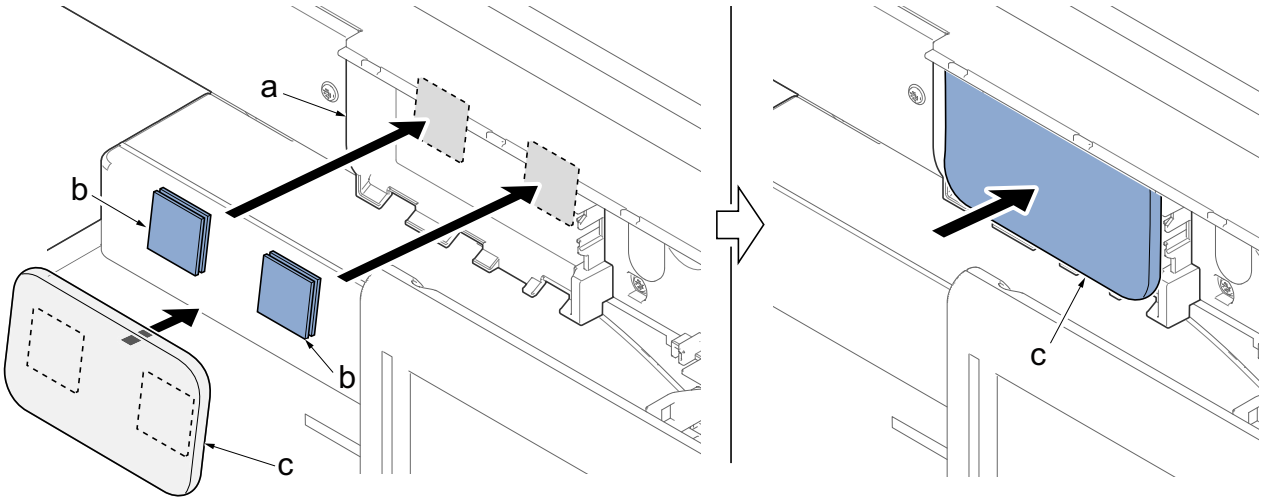

9 Connect the USB connector (b) to the lower USB interface slot (c).

10 Bundle the extra part of the cable (d) and hook it on the hook (f) of the main unit.

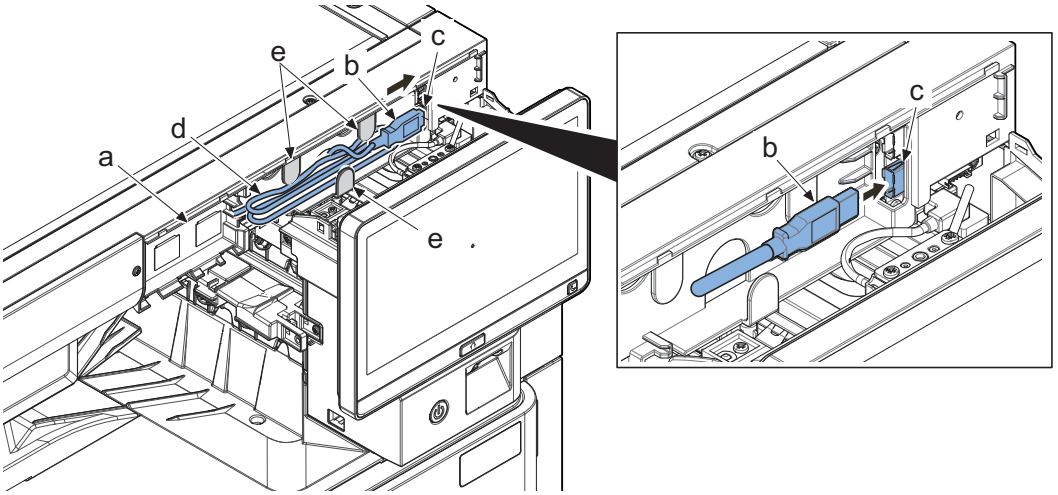

IMPORTANT

Pay attention the direction of USB connector.

11 Insert the upper exit cover (b) in the direction of the arrow and secure it in the original position with the screw (a) (M3×8).

- Align the upper exit cover (b) to the machine front side and secure the screw.

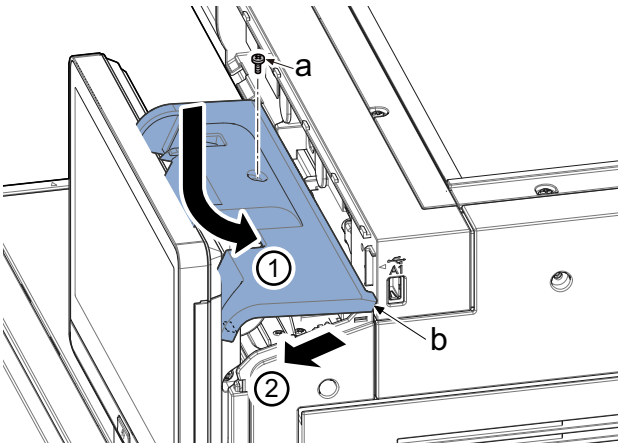

12 Affix a label (c) on the ISU front right cover (b) aligning it with the positioning mark (a).

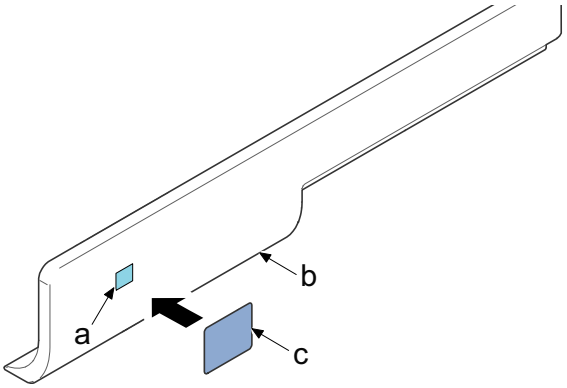

13 Attach the IC card reader cover. Latch six upper hooks (b) and then four latch lower hooks (e) by rotate it. Reattach the ISU front right cover in the original position.

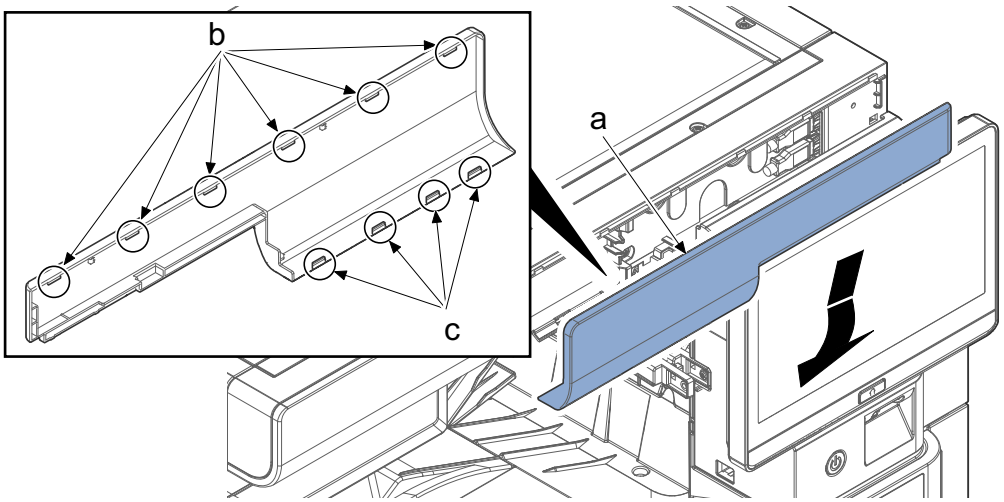

Activating Card Authentication

License key code is needed to install. Please access the designated website of your dealer or service representative, and register the "Machine No." indicated on your machine and the "Product ID" indicated on the License Certificate supplied with the product to issue the License Key.

Refer to [Optional Application] when starting the trial. (See pagepage 2-111)

(11)USB keyboard

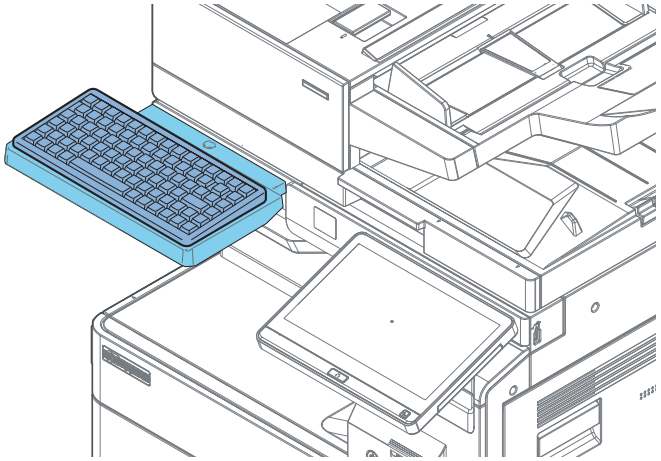

Keyboard holder 10 (1709AN0UN0)	1 pc
Accessories	
• Upper keyboard mounting bracket	1 pc
• Lower keyboard mounting bracket	1 pc
• Upper keyboard cover	1 pc
• Lower keyboard cover	1 pc
• Upper lid	1 pc
• Lower lid	1 pc
• Hook-and-loop fastener	2 pairs
• Binding band	1 pc
• Screws (M3x8 S-tite)*1	6 pc
• Screws (M3x8 S-tite Black)	2 pcs
• Screws (M3x8 P-tite)	2 pcs
• Screws (M4x8B S-tite)	4 pc
• Screws (M4x14 S-tite)*2	2 pcs

*1: 4 pc is used for this model.

*2: Not used in this model.

1 Turn the power switch off and disconnect the power plug.

2 Fix the upper keyboard mounting bracket onto the lower keyboard mounting bracket with the four screws (a) (M3x8).

- Align them with each other at the mark B.

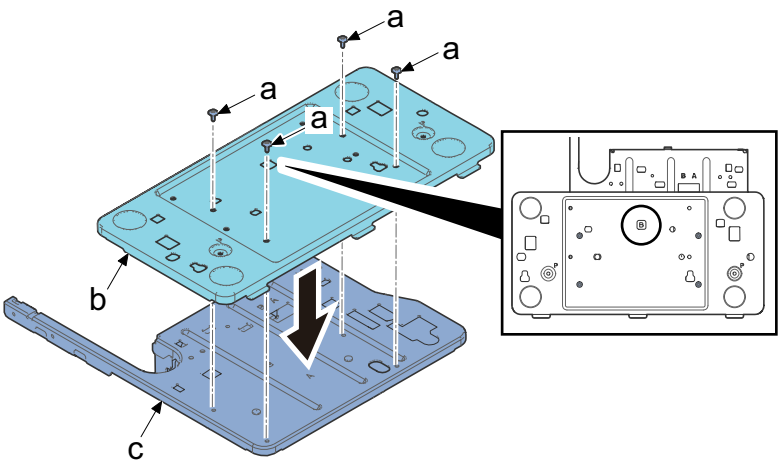

3 Remove two screws (a) (M3x8).

4 Release two hooks (c), and then remove the rear left cover (b) in the direction of the arrow.

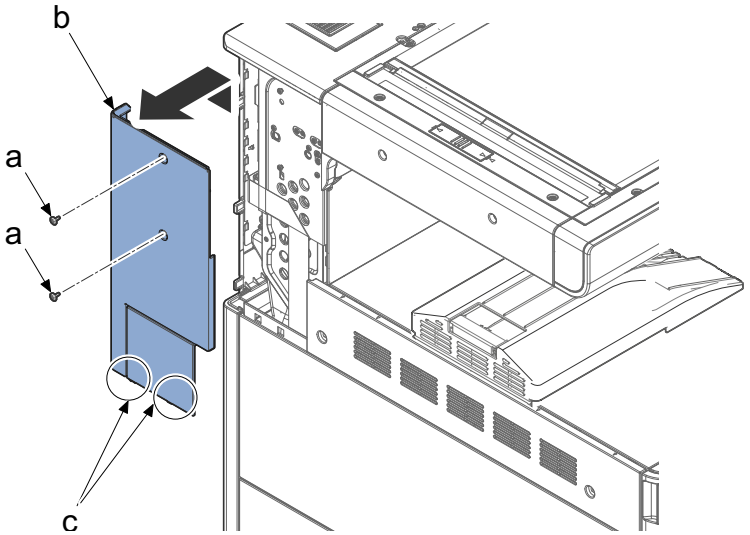

5 Remove the screw (b) (M3x8) of the ISU rear cover (a).

6 Remove two screws (d) (M3x8) of the ISU left cover (c).

7 Lift up the left side of the ISU rear cover (a) and remove the ISU left cover (c).

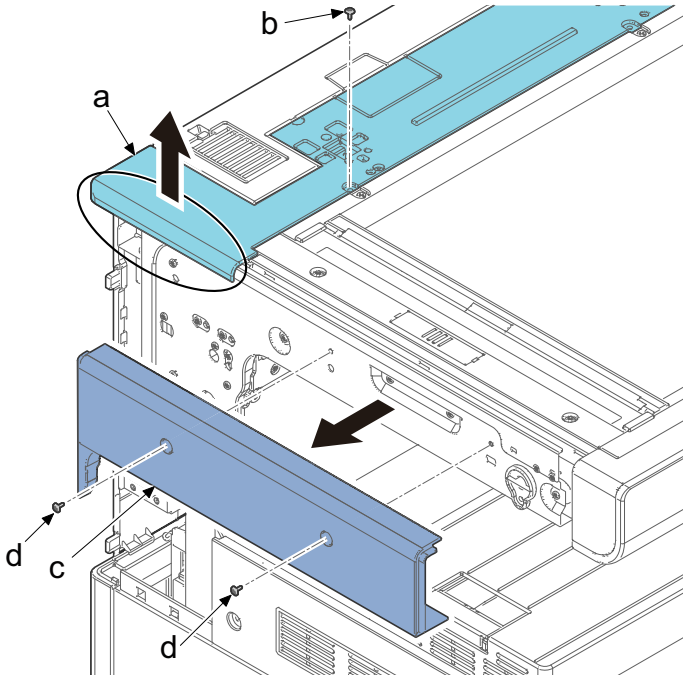

8 Pull up the operation unit (a).

9 Insert a finger into the aperture (c) of the ISU front right cover (b) to pull it toward you and remove four lower hooks (d). Unlatch six upper hooks (e) in the direction of the arrow to remove it.

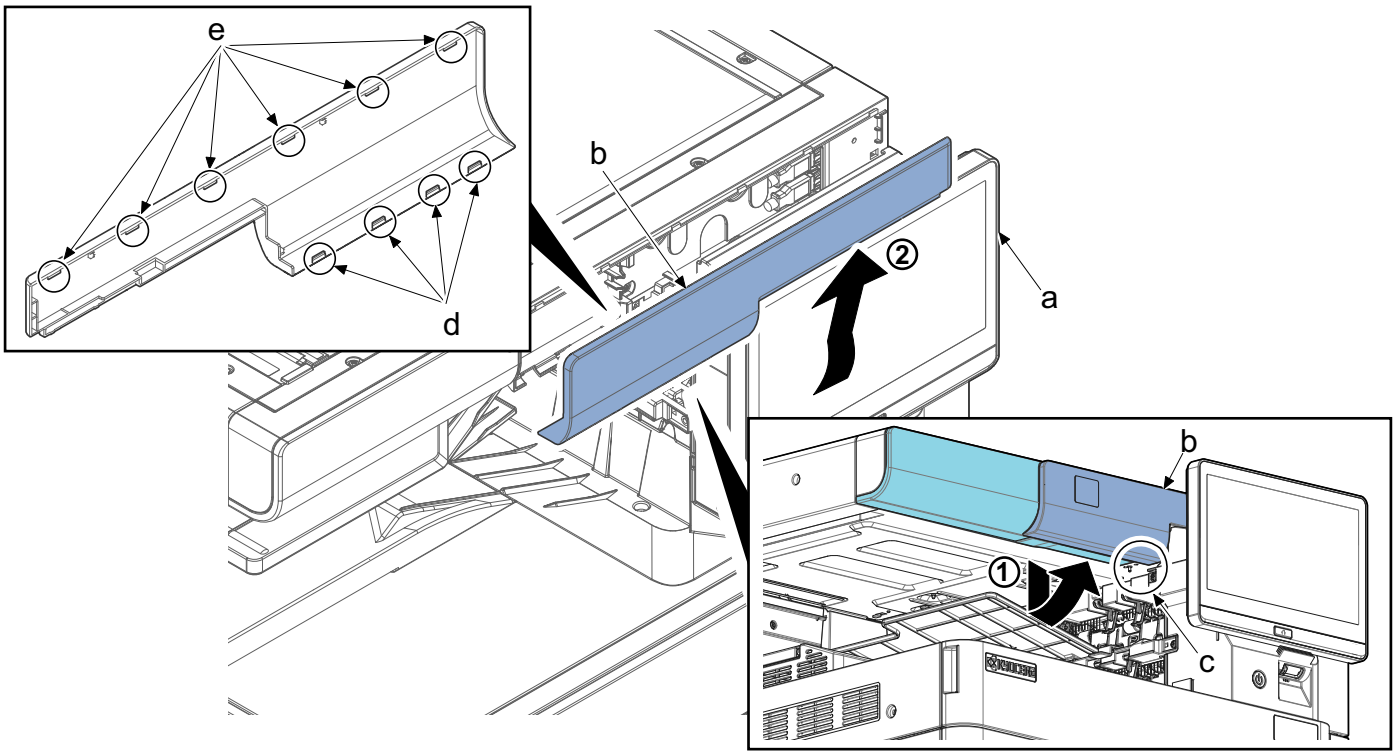

10 Remove the screw (a) (M3x8).

11 Release two ribs (d) with a flat-blade screwdriver (c).

12 Detach the exit upper cover (b) in the direction of the arrow.

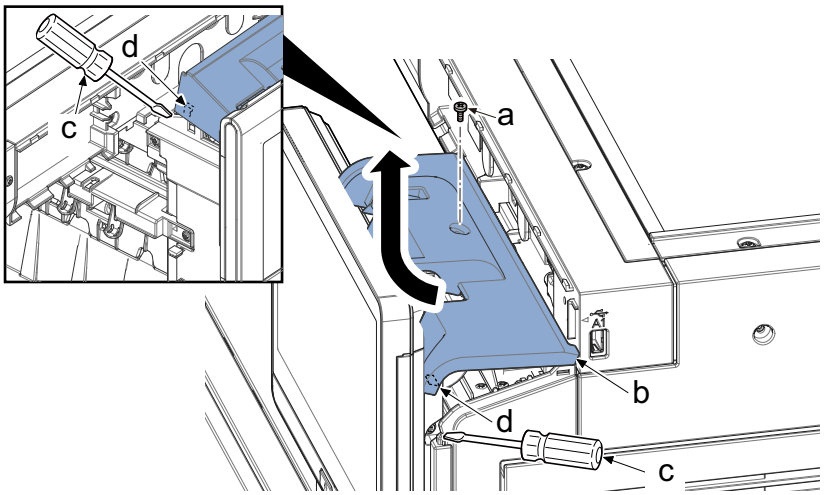

13 Remove the screw (a) (M3x8).

14 Release the hook (c) with a flat-blade screwdriver (b), and then remove the keyboard cover (d) by sliding it.

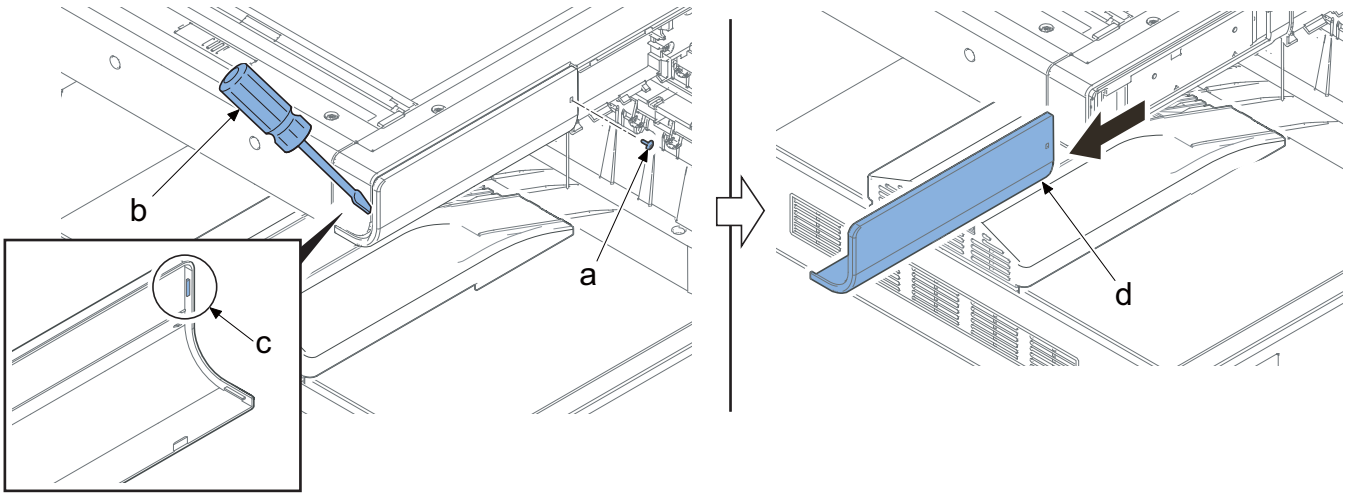

15 Pass the arm of attaching keyboard mounting bracket (a) through the machine aperture (b) and latch the hook (c) to the aperture (d). Secure the keyboard mounting bracket (a) with two screws (e) (M4×8).

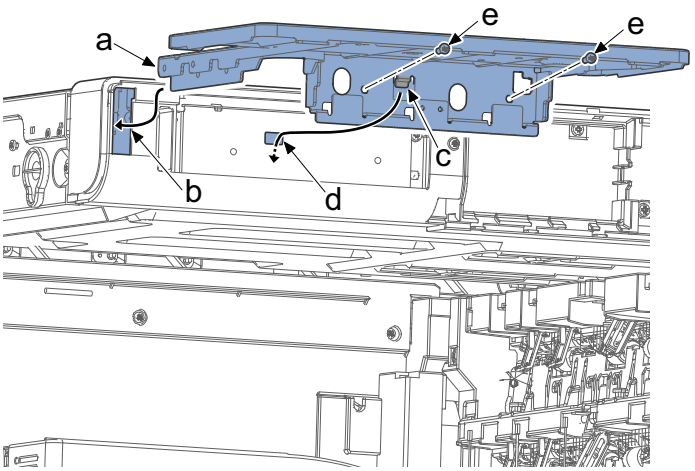

16 Secure the lower keyboard mounting bracket (a) with two screws (b) .

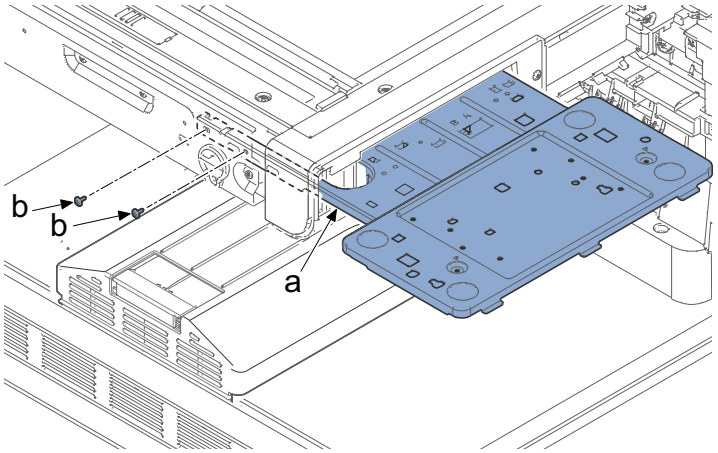

17 Latch the hook (b) of the lower lid (a) in the hole (c) of the lower keyboard mounting plate and secure it with the screw (d) (M3x8, black).

- Attach it aligning the hooks to the punch mark B.

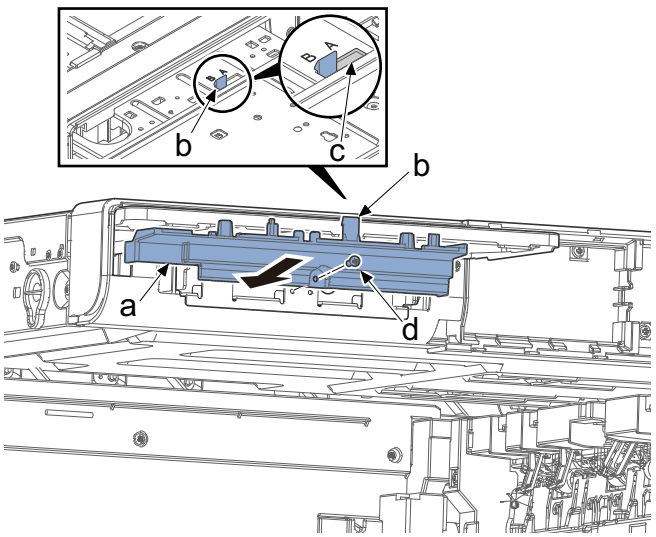

18 Insert two positioning pins (b) of lower keyboard cover (a) into the holes (d) of the upper keyboard mounting plate (c) and slide it to the rear.

19 Insert the lower keyboard cover (a) into three hooks (e) on the keyboard mounting plate (a) and two cutouts (f).

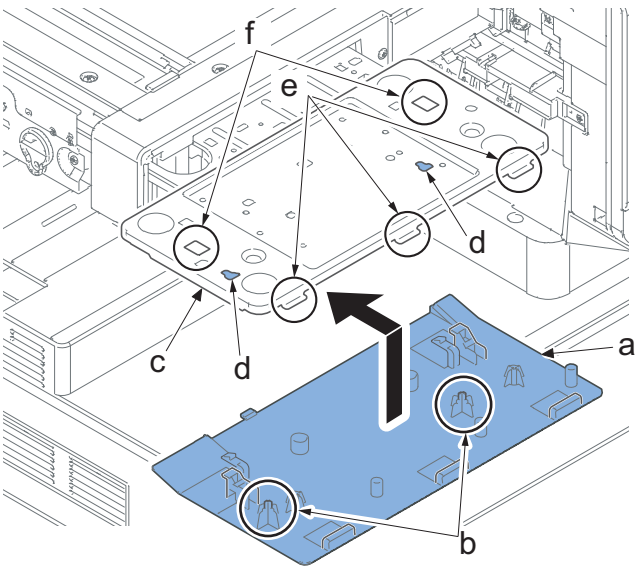

20 Fix the lower keyboard mounting bracket (b) onto the upper keyboard mounting bracket (c) with two screws (a) (M3x8 P-tite).

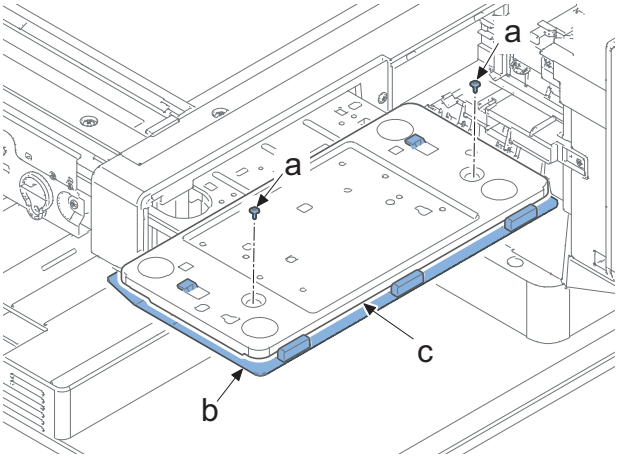

21 Insert the upper keyboard cover (a) into the upper keyboard mounting plate (b) to attach it.

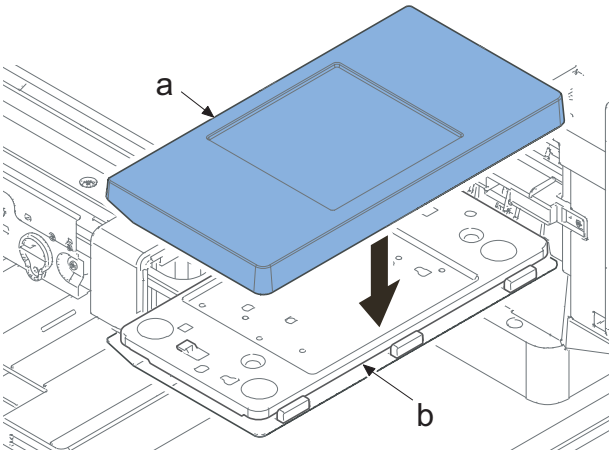

22 Fix the Upper lid (b) to the lower keyboard mounting bracket (C) with the screw (a) (M3x8 Black).

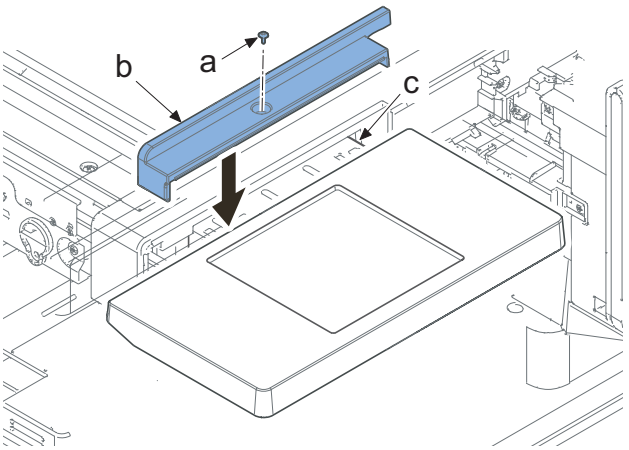

23 Affix a pair of hook-and-loop fasteners (c) to the concave (b) of the upper keyboard cover (a).

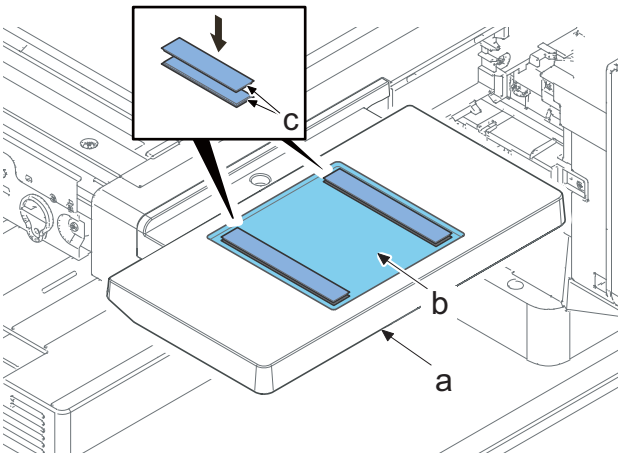

24 Place the keyboard (a) on the hook-and-loop fastener (b) and press it to fix.

25 Connect the USB connector (c) to the upper USB interface slot (d).

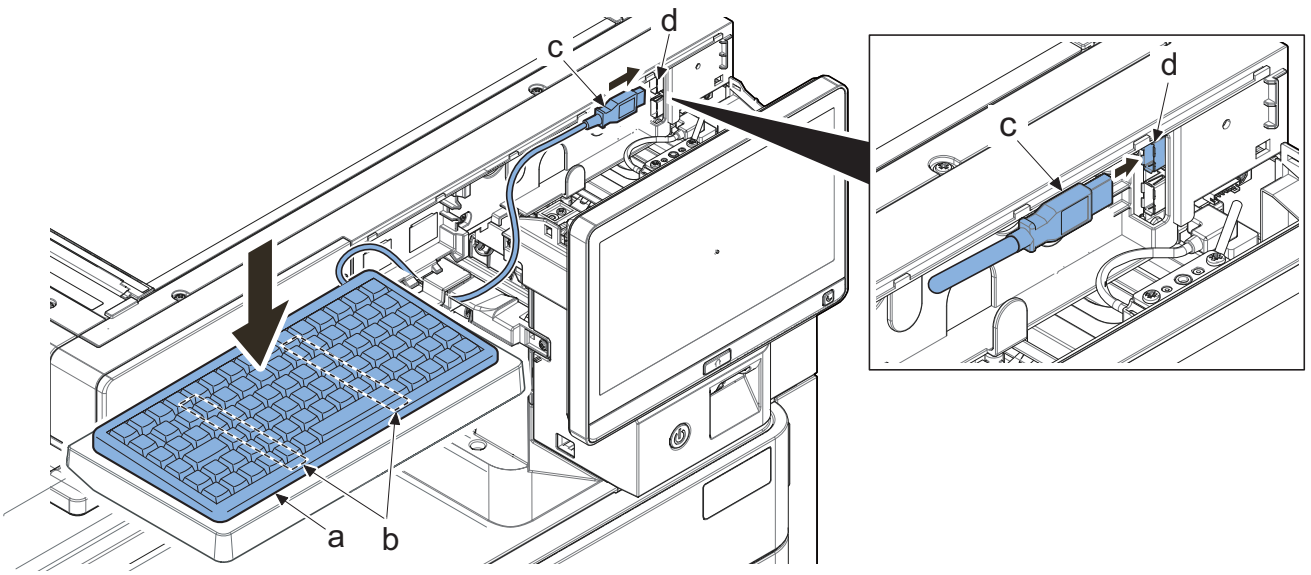

IMPORTANT

Pay attention the direction of USB connector.

26 Bundle the extra cable (a) and hook it on the hook (b) of the main unit.

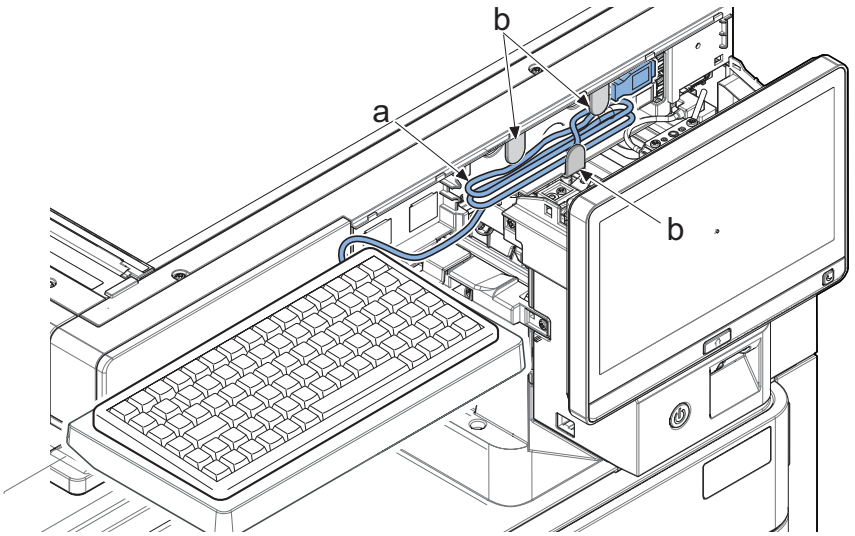

- In case that the card reader (a) is already installed, remove the USB wire (b) of the card reader from the hook (c) of the main unit. Bundle two of the extra USB wires and hook them on the hook (c) of the main unit again.

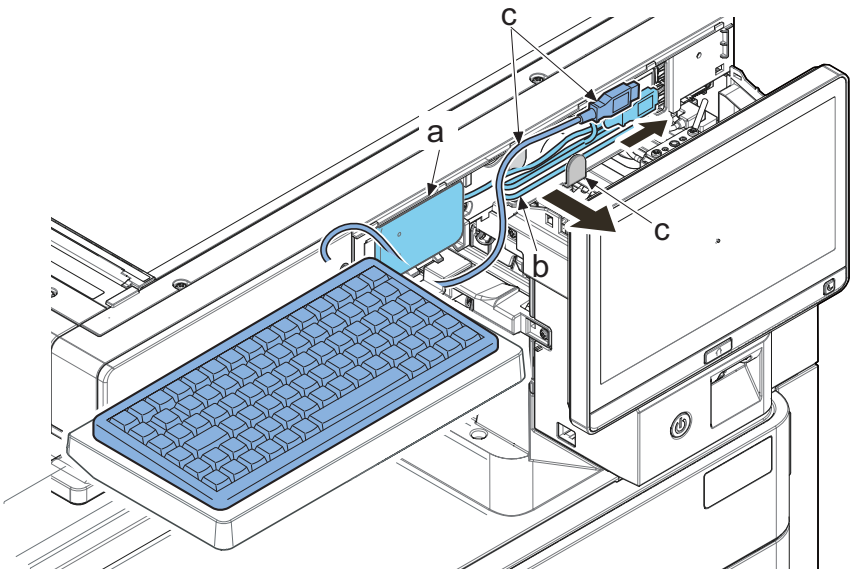

27 Push the USB cable (a) to between the ribs of main unit and secure it.

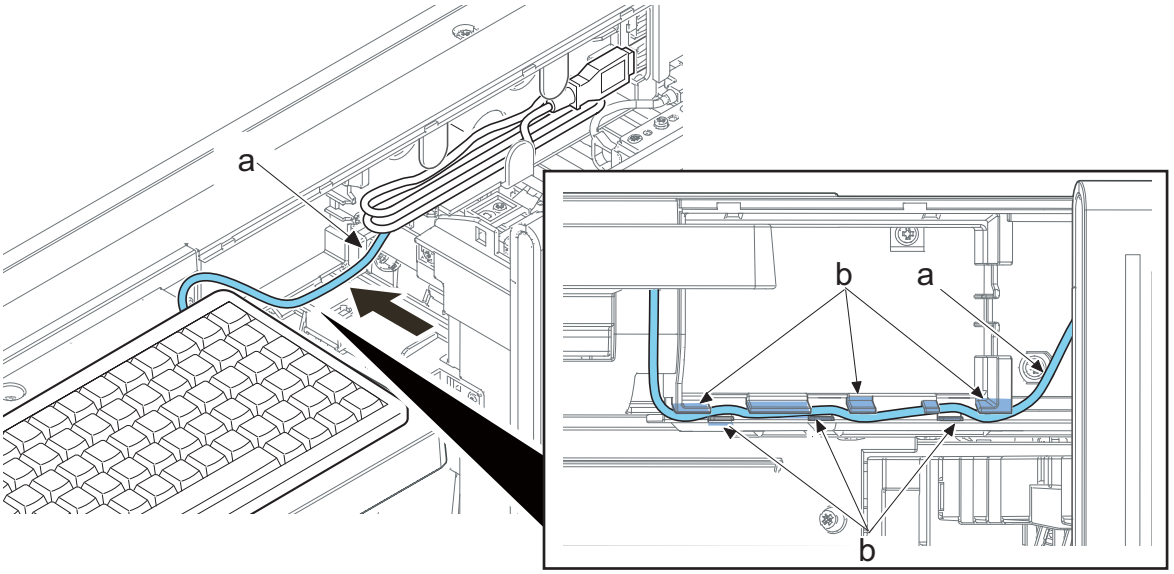

28 Insert the upper exit cover (b) in the direction of the arrow and secure it in the original position with the screw (a) (M3×8).

- Align the cover to the machine front side and secure the screw.

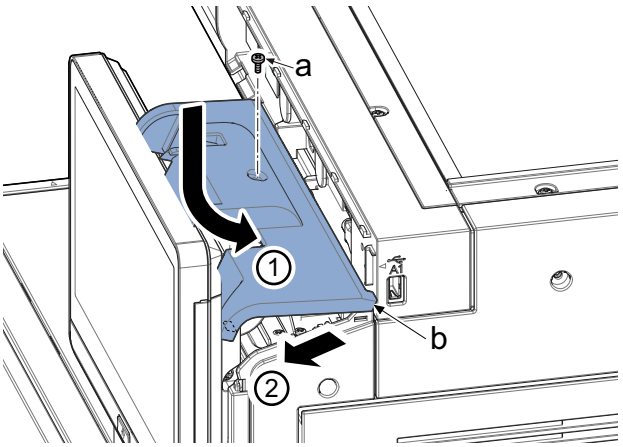

29 Latch six upper hooks (b) and then four latch lower hooks (e) by rotate it. Reattach the ISU front right cover in the original position.

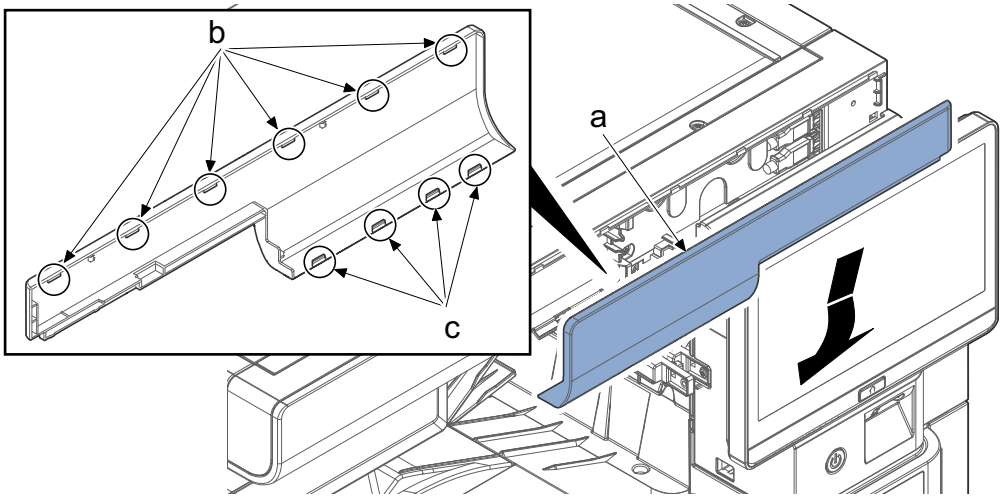

30 Lift up the left side of ISU rear cover (a) and secure the left ISU cover (c) in original position with two screws (d) (M3×8).

31 Reattach the screw (b) (M3×8) of the ISU rear cover (a).

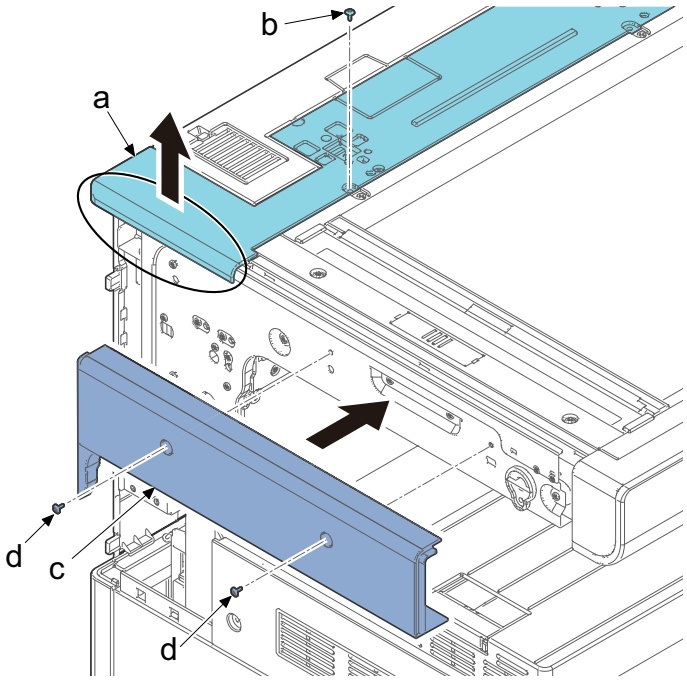

32 Latch two hooks (c) and reattach the left rear cover (b) in the original position with two screws (a) (M3x8).

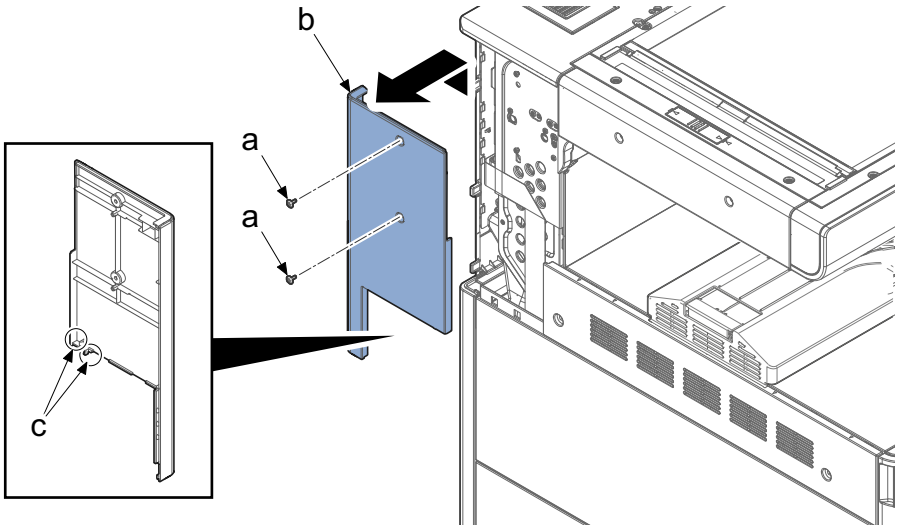

(12)Cassette heater

(12-1)In the case of main unit cassette

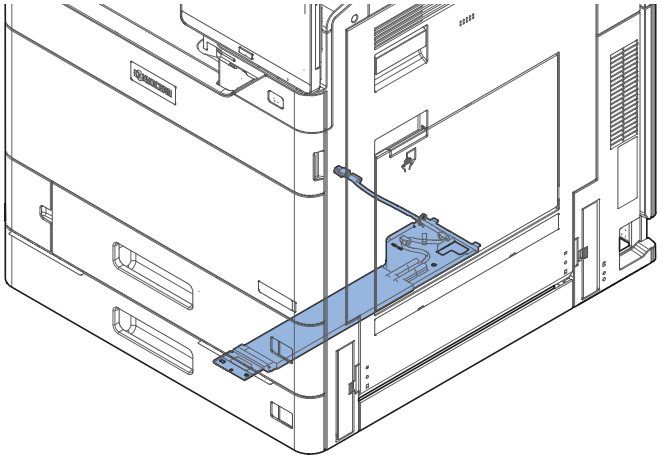

Cassette heater installation requires the following parts:

Cassette heater 120 set (302ND9498_)	1 pc
Cassette heater 240 set (302ND9499_)	
Accessories	
• Cassette heater 120	1 pc
• Cassette heater 240	1 pc
• Screws (M3x8 with the binding head)	2 pc

1 Turn the power switch off and disconnect the power plug.

2 Pull out the upper cassette (a) from the main unit (c) and remove it in the direction of the arrow.

3 Pull out the lower cassette (b) from the main unit (c) and remove it in the direction of the arrow.

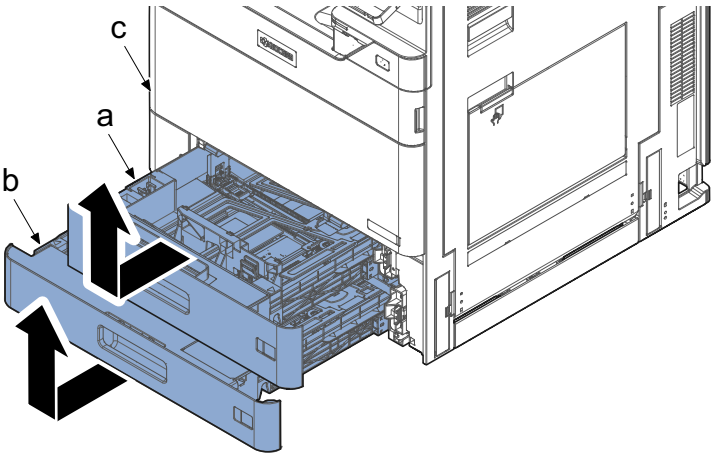

4 Insert the cassette heater (a) and put two protrusions (b) in two apertures (c) of the rear side plate.

5 Attach it with the screw (e) (M3×8) to the base (d).

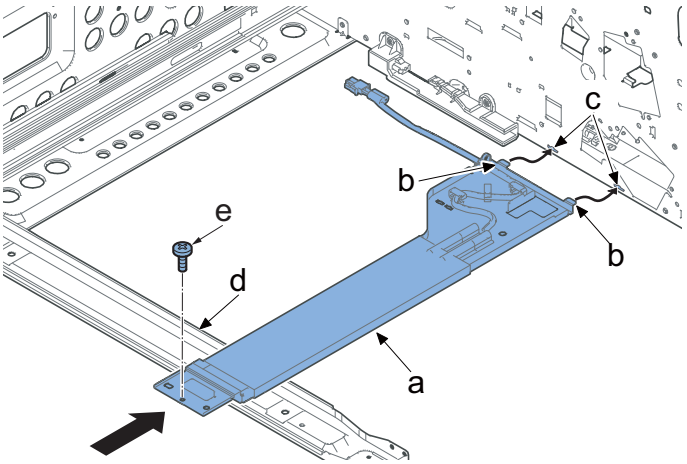

6 Connect the heater connector (a) to the main unit side connector (b).

7 Put the cable (c) into the rib of the heater holder (d) and fix it.

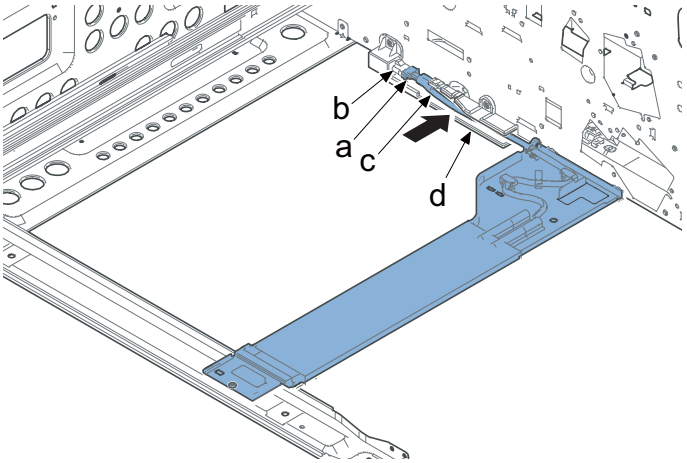

8 Reattach the parts in the original position.

9 Turn the power on and set maintenance mode U327 [Cassette heater On/Off] to [On].

- The setting works after exit maintenance mode and turn off and on.

IMPORTANT

When connecting the cassette heater, do not unplug the power cord. (Power is still supplied when the power is switched off)

(12-2)In case of Paper Feeder (PF-7140)

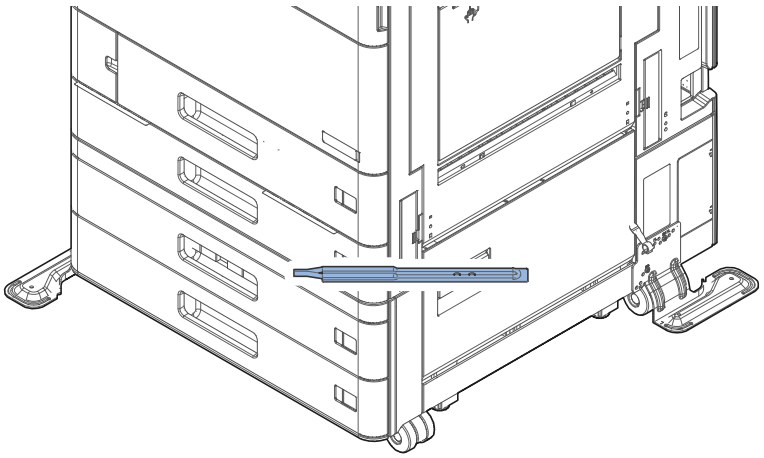

Cassette heater installation requires the following parts:

Cassette heater 120 set (303RB9405_)	1 pc
Cassette heater 240 set (303RB9406_)	
Accessories	
• Cassette heater 120	1 pc
• Cassette heater 240	
• High temperature caution label	1 pc
• Wire saddles	4 pc
• Screws (M3x8 with the binding head)	2 pc

1 Turn the power switch off and disconnect the power plug.

2 Pull out the upper cassette (a) from the paper feeder (b) and remove it in the direction of the arrow.

3 Pull out the lower cassette (a) from the paper feeder (b) and remove it in the direction of the arrow.

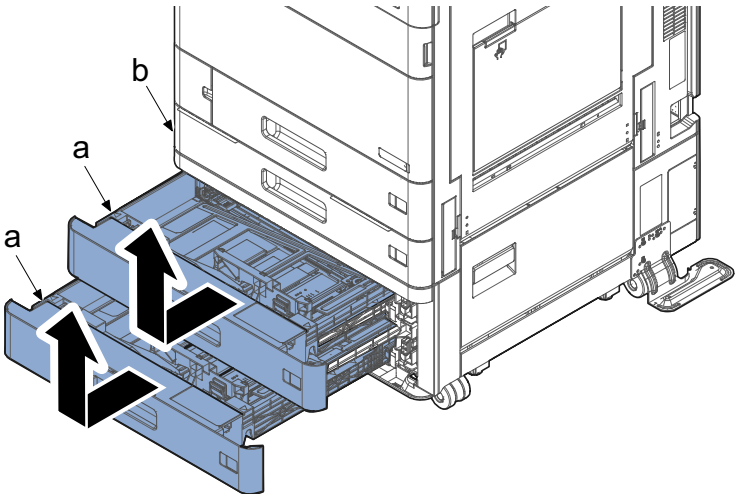

4 Secure the cassette heater (a) to the base with two screws (b) (M3x8).

5 Connect the heater connector (c) to the main unit side connector and secure the wire with four wire saddles (d).

- Make sure the wire does not float.

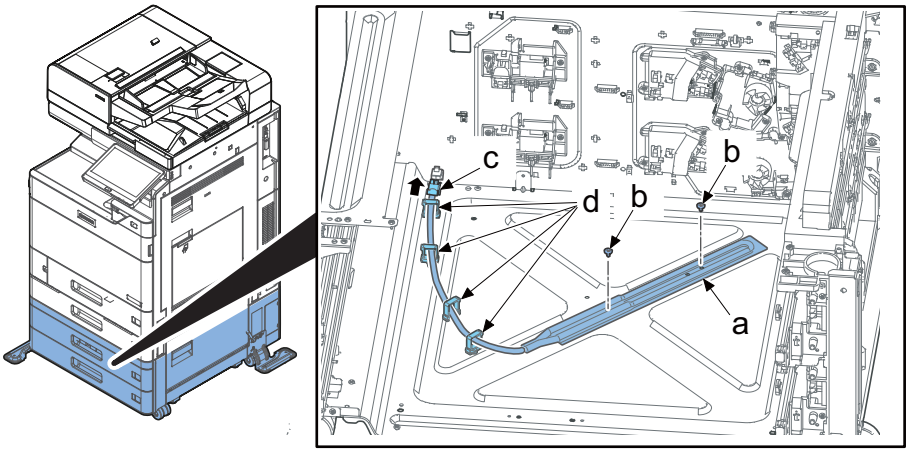

6 Affix the caution label (a) on the groove of the base.

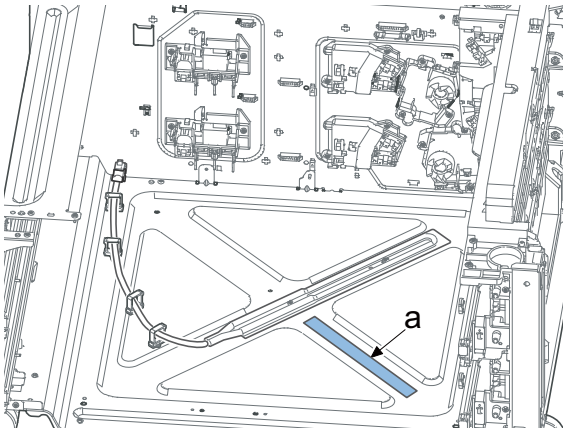

7 Reattach the parts in the original position.

8 Turn the power on and set maintenance mode U327 [Cassette heater On/Off] to [On].

IMPORTANT

When connecting the cassette heater, do not unplug the power cord. (Power is supplied when the power is switched off)

(12-3)In case of Paper Feeder (PF-7150)

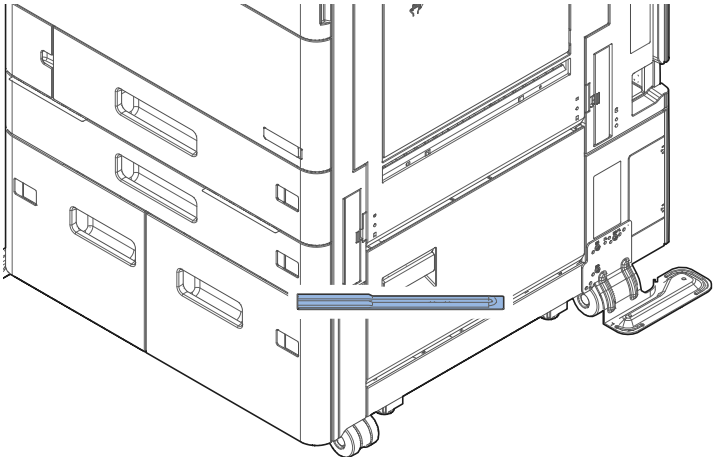

Cassette heater installation requires the following parts:

Cassette heater 120 set (303RB9405_)	1 pc
Cassette heater 240 set (303RB9406_)	
Accessories	
• Cassette heater 120	1 pc
• Cassette heater 240	
• High temperature caution label	1 pc
• Wire saddles	4 pc
• Screws (M3x8 with the binding head)	2 pc

1 Turn the power switch off and disconnect the power plug.

2 Pull out the upper cassette (a) from the main unit (e) and remove it in the direction of the arrow.

3 Pull out the lower cassette (b) from the main unit (e) and remove it in the direction of the arrow.

4 Pull out the right paper deck (c) and left paper deck (d) from the paper feeder (f).

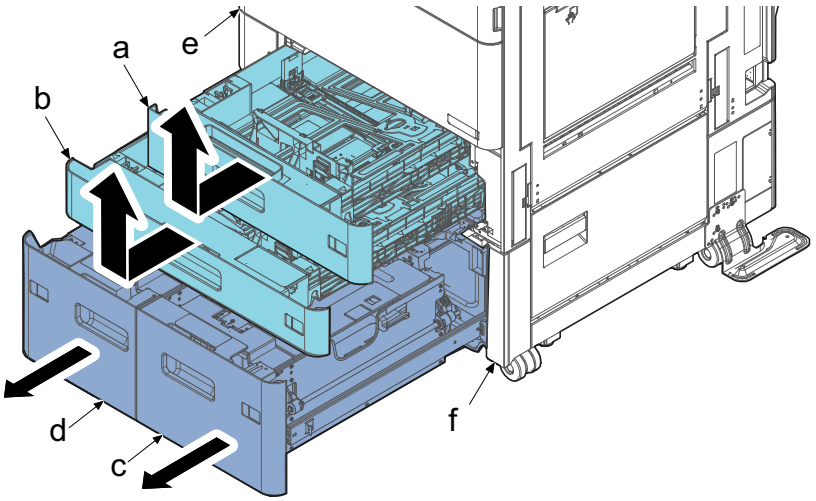

5 Secure the cassette heater (a) to the base with two screws (b) (M3x8).

6 Connect the heater connector (c) to the main unit side connector and secure the wire with four wire saddles (d).

7 Make sure the wire does not float.

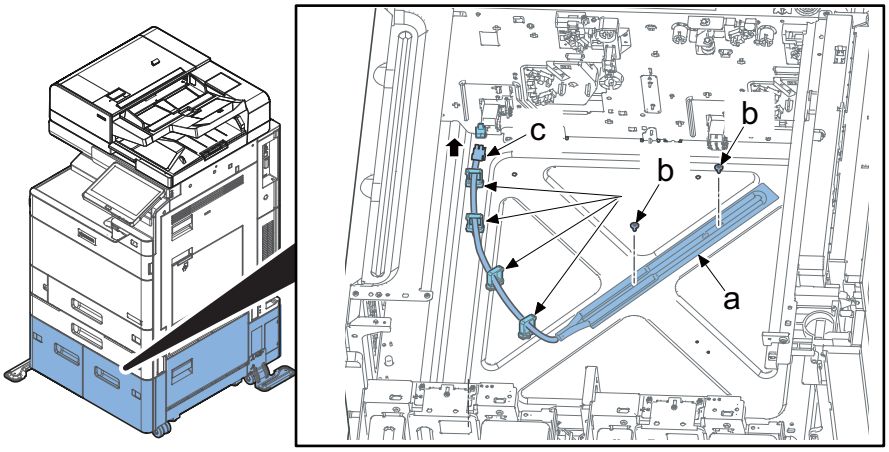

8 Affix the caution label (a) on the groove of the base.

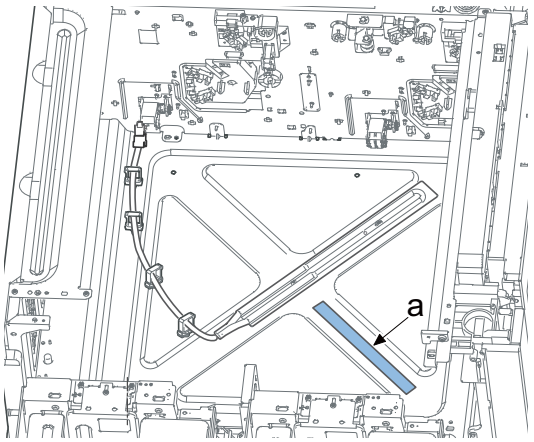

9 Reattach the parts in the original position.

10 Turn the power on and set maintenance mode U327 [Cassette heater On/Off] to [On].

IMPORTANT

When connecting the cassette heater, do not unplug the power cord. (Power is supplied when the power is switched off)

(13)In case of Side Paper Feeder (PF-7120)

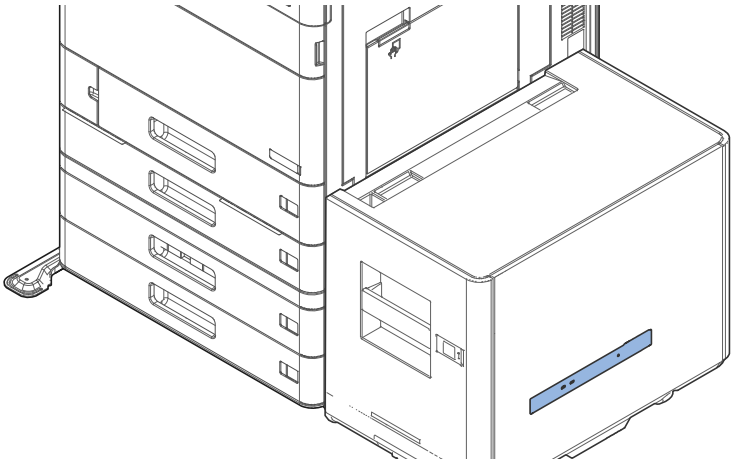

Cassette heater installation requires the following parts:

Cassette heater 120 set (303RL9405_)	1 pc
Cassette heater 240 set (303RL9406_)	
Accessories	
• Cassette heater 120 assembly	1 pc
• Cassette heater 240 assembly	
• Wire saddles	4 pcs
• Edge saddle	1 pc
• Screws (M3x8 with the binding head)	4 pcs

(Side Paper Feeder side)

1 Turn the power switch off and disconnect the power plug.

2 Remove the connector of the paper feeder at the main unit side.

3 Remove four screws (a) (M3x8) and then remove the rear cover (b).

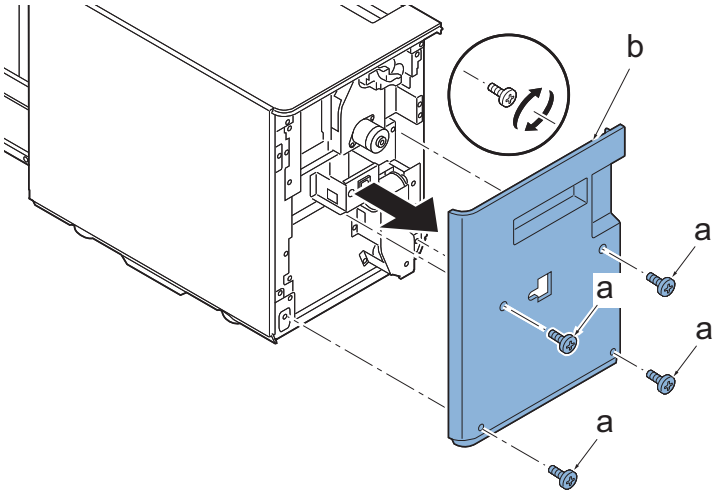

4 Pull out the cassette (a).

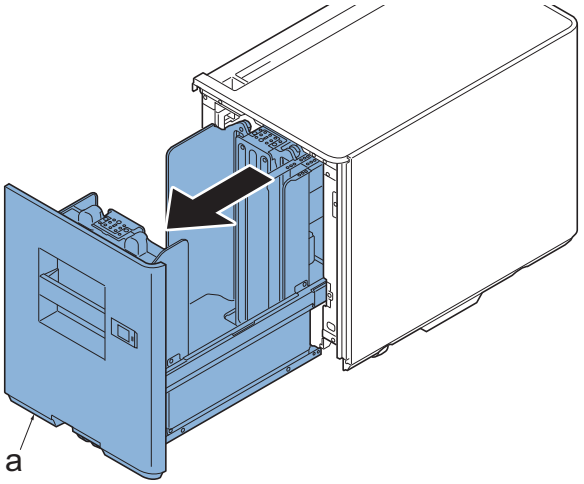

5 Release four pins (a) and remove the right cover (b) while sliding it in the direction of the arrow.

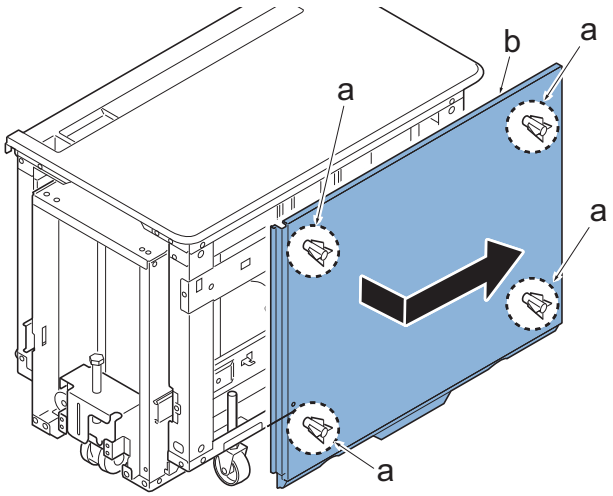

6 Pass the heater cassette cable (a) through the aperture.

7 Insert the hook (d) of the cassette heater set (c) into two grooves (e) and secure it with two screws (M3×8) (f).

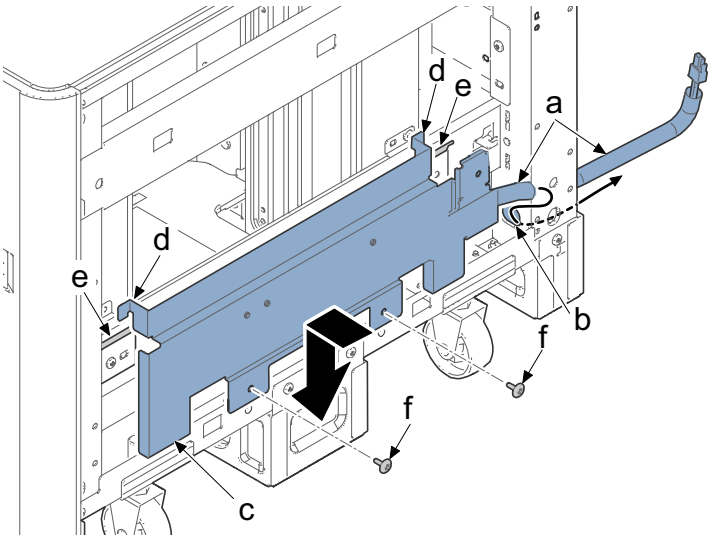

8 Connect the connector (b) of cassette heater wire (a) to the connector (c) of the inlet cable.

9 Attach two wire saddles (d) and the edge saddles (e) and secure the wire.

10 Attach the right cover and the rear cover.

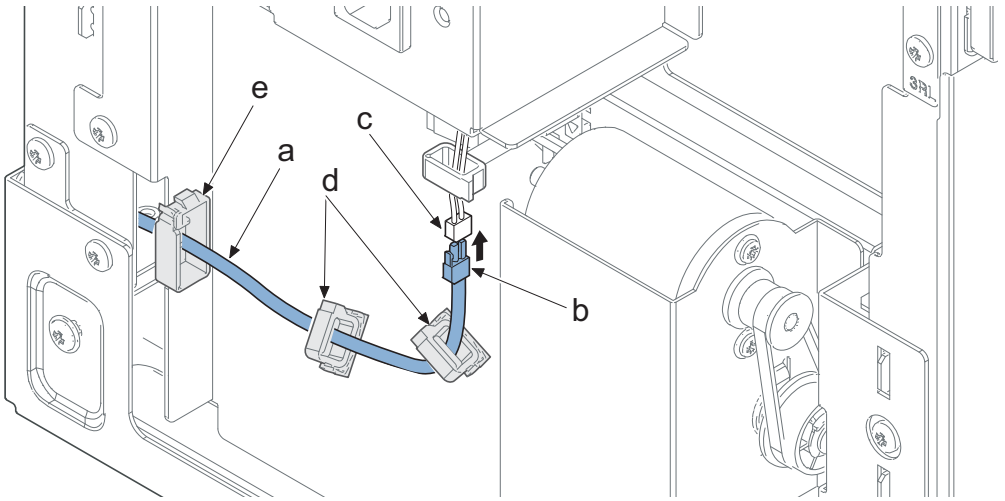

Main unit side

11 Remove two screws (a) (M3×8) and remove the cover plate (c) from the main unit side paper feeder (b).

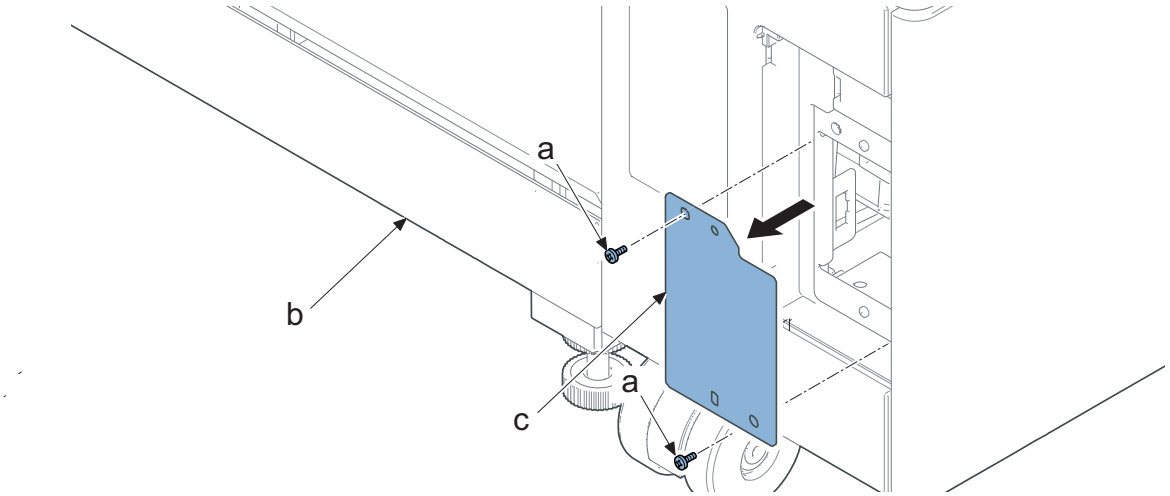

12 Connect the connector (b) of the heater outlet set (a) to the paper feeder side connector (c).

13 Attach the heater outlet set (a) with two screws (d) (M3×8).

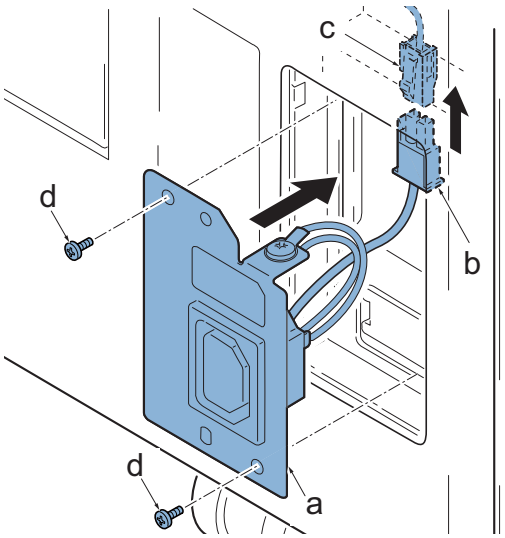

14 Connect the side feeder (a) to the main unit side paper feeder (b) with the AC cord (c) and the connector wire (d).

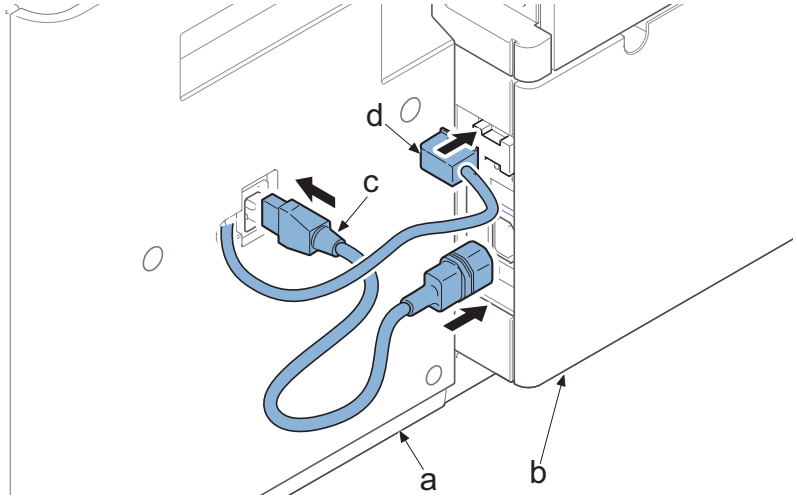

15 Reattach the parts in the original position.

16 Turn the power on and set maintenance mode U327 [Cassette heater On/Off] to [On].

IMPORTANT

When connecting the cassette heater, do not unplug the power cord. (Power is supplied when the power is switched off)

(14)Coin Vendor (option for 100v model only)

Coin vendor installation requires the following parts:

Vendor relay wire (302NL4631_)	1 pc
Coin Vendor (1905H99JP0)	1 pc
Accessories	
• Vendor wire	1 pc
• Vendor base	1 pc
• Screws (M4x6)	4 pc

1 Turn the power switch off and disconnect the power plug.

2 Attach the vendor base (b) to coin vendor (c) with four screws (a) (M4x6).

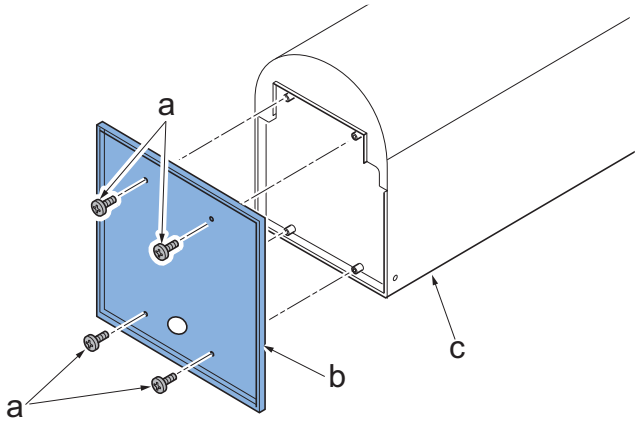

3 Remove a screw (a) (M3x10) and then remove the rear upper cover (b) by sliding to the direction of the arrow.

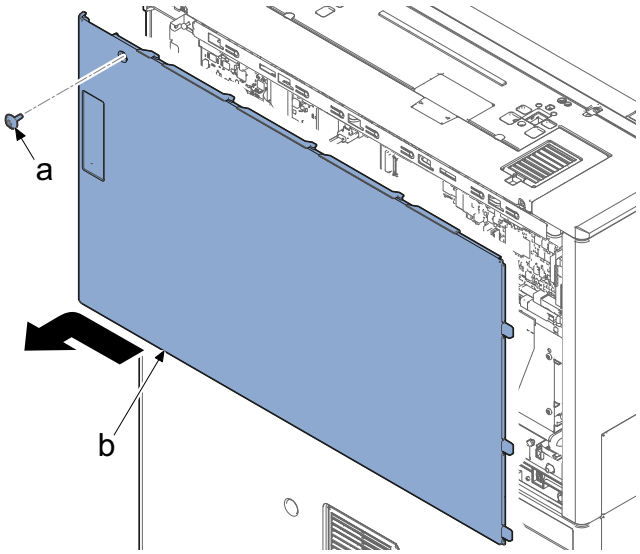

4 Remove the screw (a) (M3x8).

5 Push down the lower rear cover (c), release the upper side rib, and release the lower hook (d) while lifting it up slightly opened. After that, remove it in the direction of the arrow.

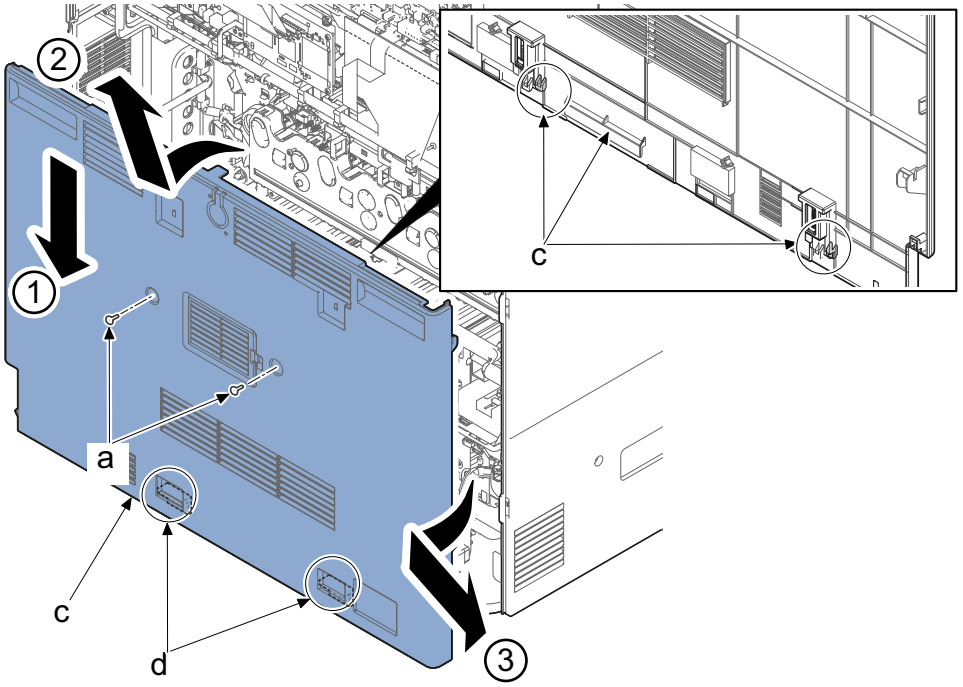

6 Remove two screw (a) (M3x8).

7 Release two hooks (c) and remove the left rear cover (b) in the direction of the arrow.

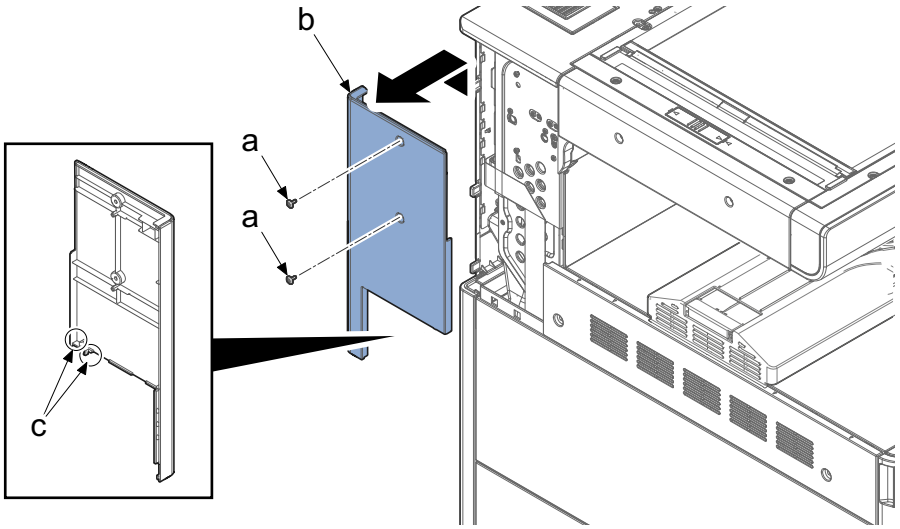

8 Open the front cover.

9 Remove two screws (a) (M3x8) from the left top cover (c) and the screw (b) (M3x8) from the left lower cover.

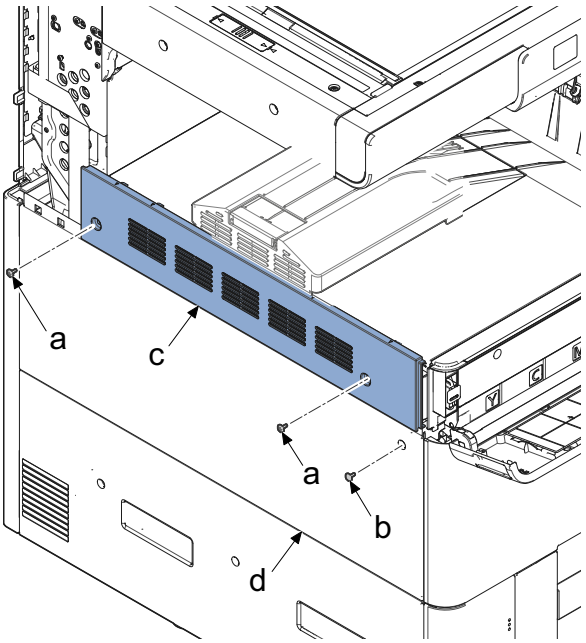

10 Release four hooks (b) in top of the left top cover while spread left lower cover (c) in the direction of the arrow, and remove the left top cover (a).

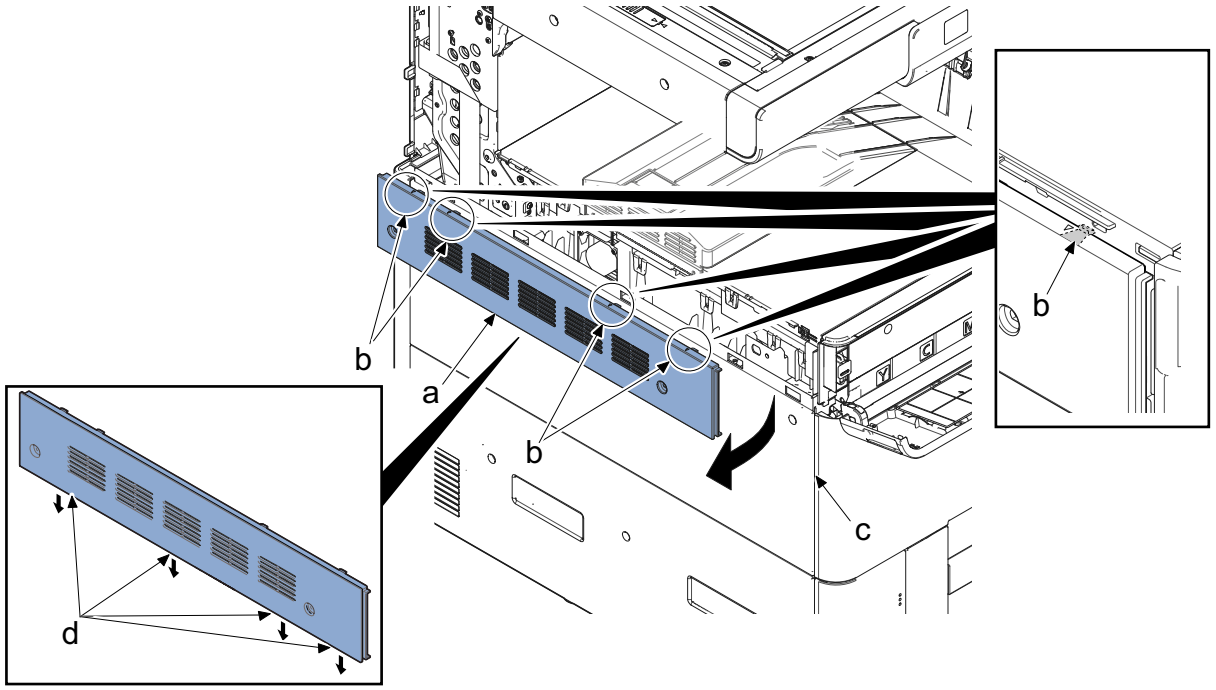

11 Pull out the lower cassette.

12 Remove three screws (a) (M3x8).

13 Lift and remove four hooks (c) and remove left lower cover (b).

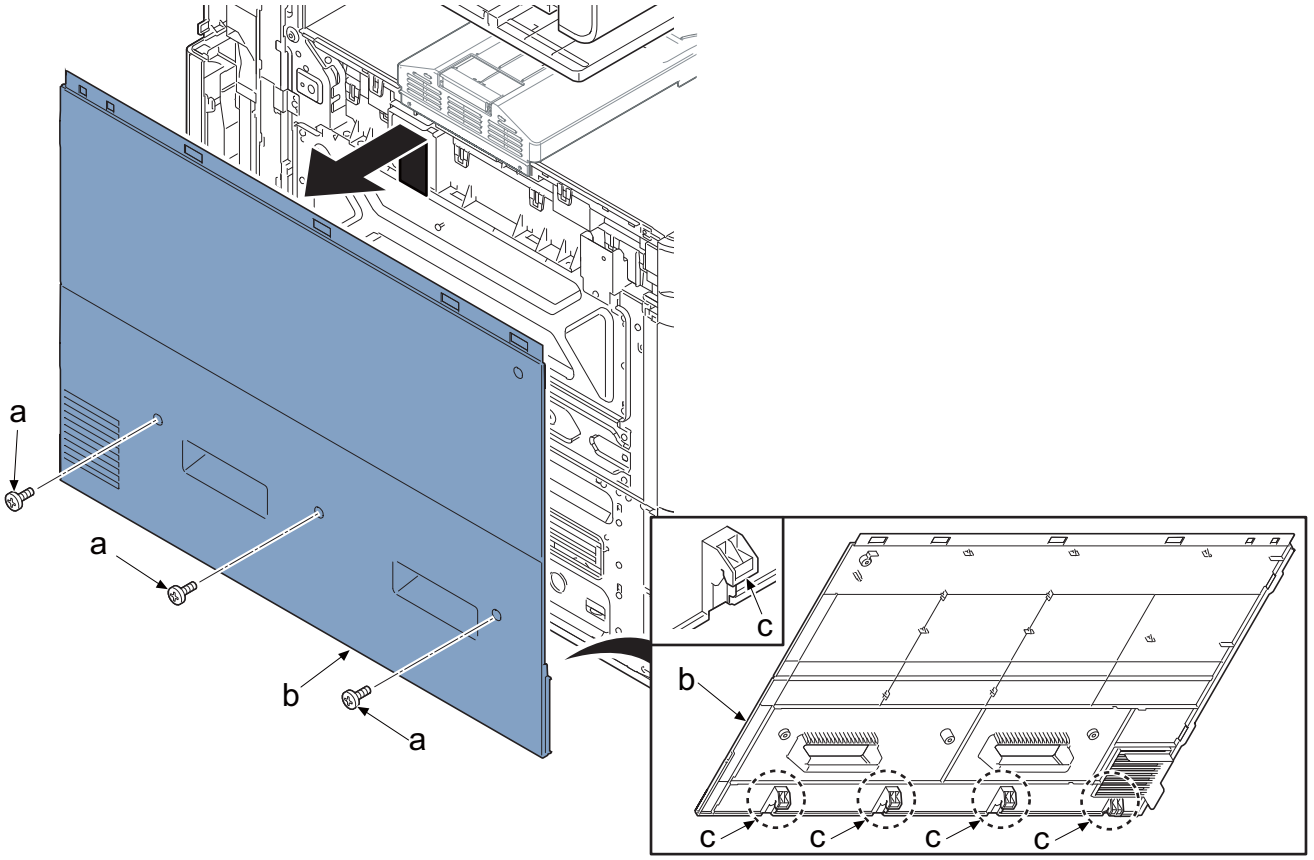

14 Remove two screws (a) and remove the concealing lid (b).

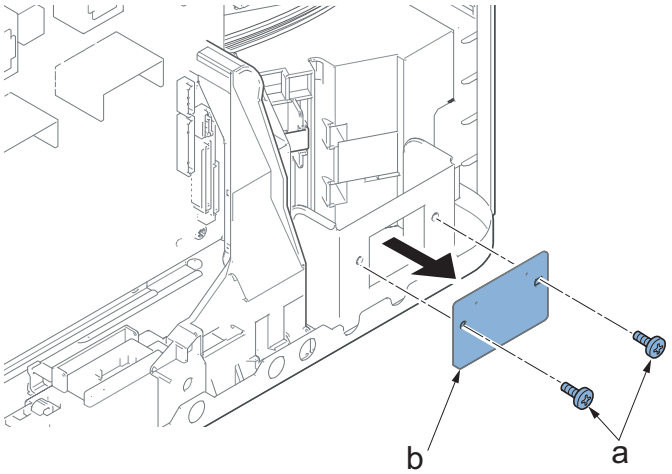

15 Pass the vendor wire (a) through the aperture (b).

16 Secure the vendor cable (a) with two screws (c) once removed in step 5.

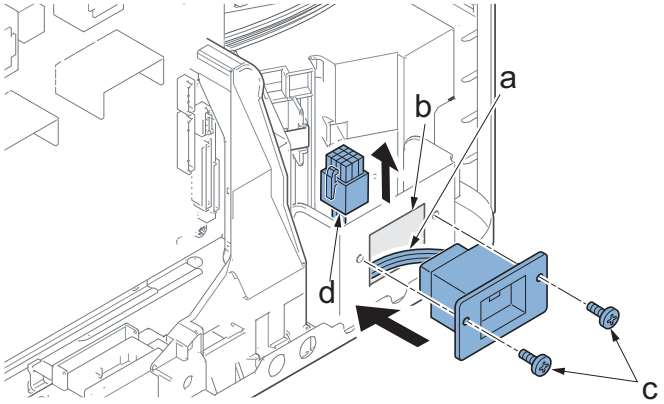

17 Remove one screw (a) and attach to the earth terminal (b) of the vendor wire.

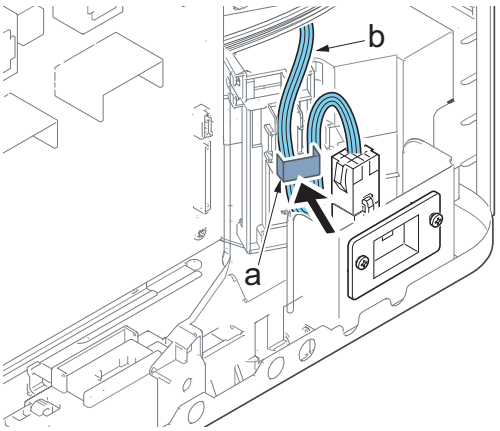

18 Connect the connector (b) of the vendor relay wire (a) to the connector (d) (YC13) of the engine PWB (c).

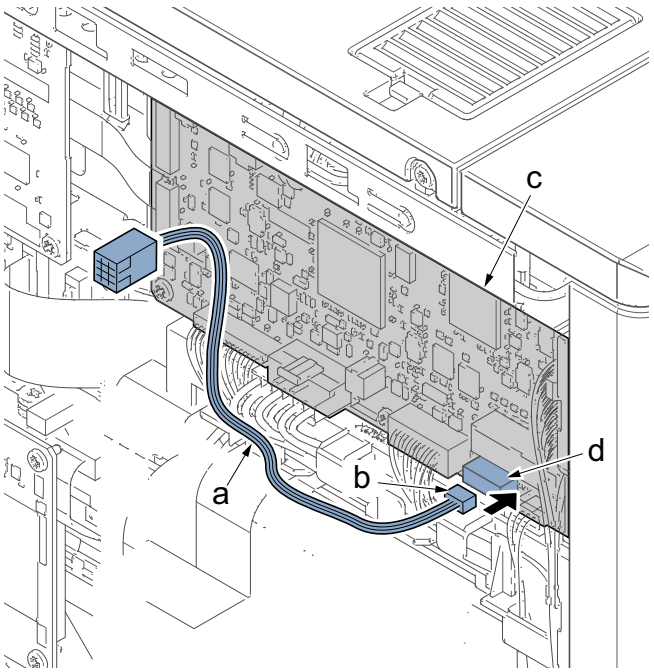

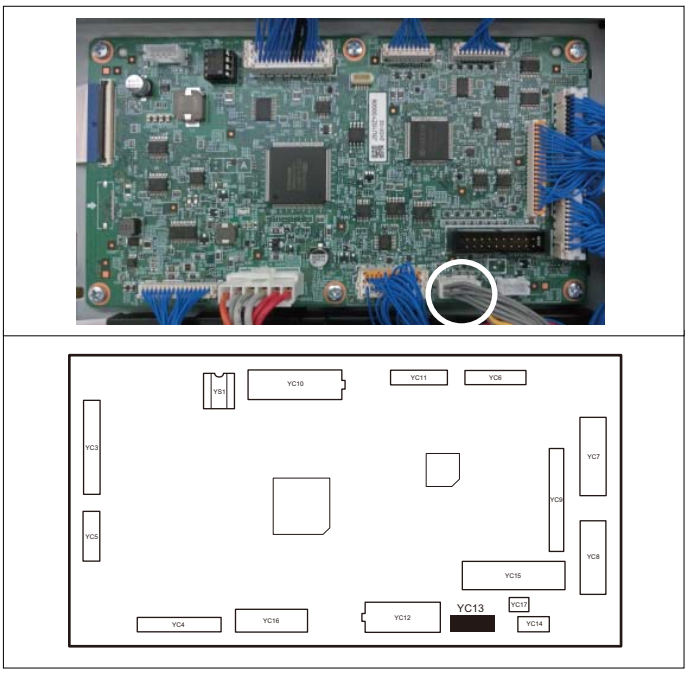

19 Pass the vendor relay wire (a) through the wire saddle (b) and the edge saddle (c).

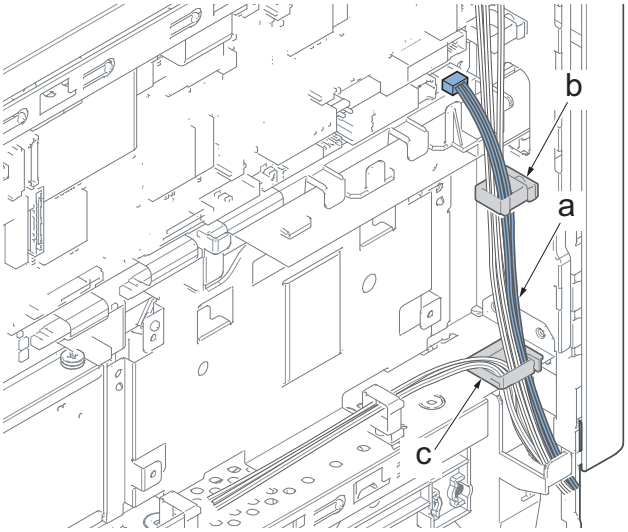

20 Remove four wire stoppers (a) and then fix the vendor relay wire (b).

21 Connect the connector (c) of the vendor relay wire to the vendor wire (d).

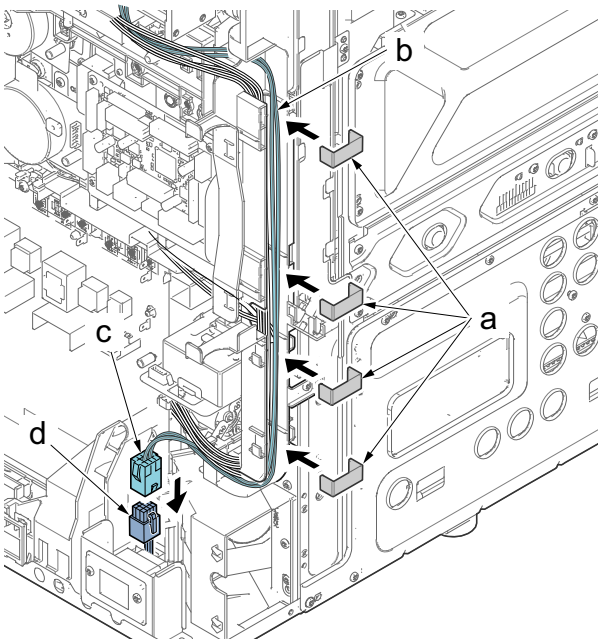

22 Remove wire stopper (a) and then fix the vendor relay wire (b).

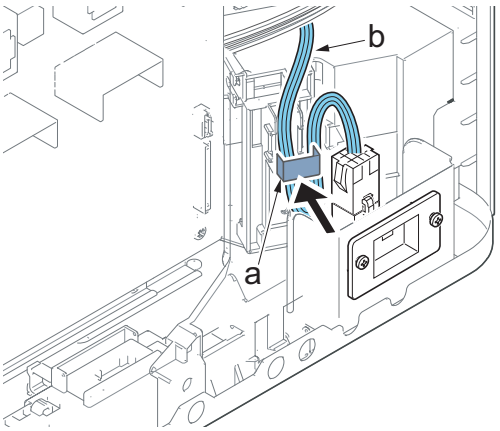

23 Reattach the left lower cover to the original position.

24 Reattach the left upper cover to the original position.

25 Reattach the rear left cover to the original position.

26 Reattach the lower rear cover in the original position.

27 Reattach the rear upper cover to the original position.

28 Connect the signal wire of the coin vendor to the connector of the vendor wire.

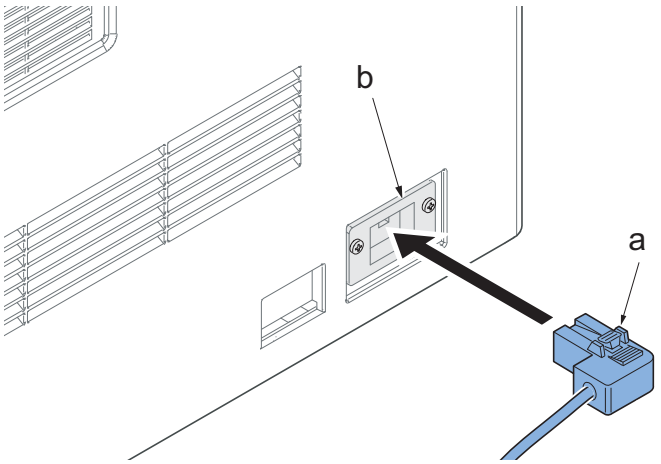

29 Turn the power on and set maintenance mode U206 (Coin vendor setting: On/Off Config) to [ON].

(15)Banner Tray

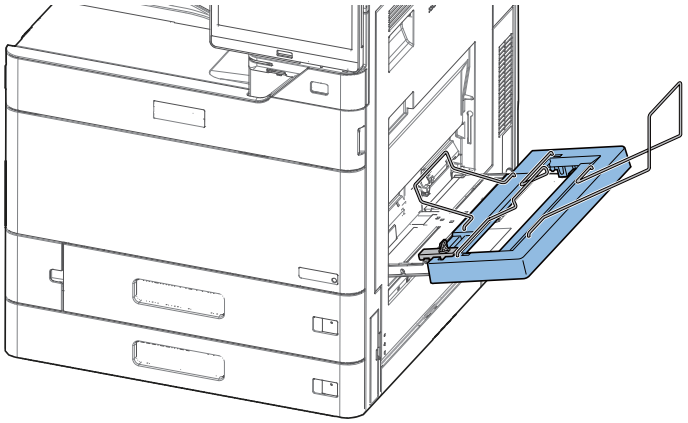

Installation of banner tray requires the following parts:

Banner Guide 10 (1203RP0UN0)	1 pc
Accessories	
• Tray base	1 pc
• paper guide A	1 pc
• paper guide B	1 pc
• paper guide C	1 pc

1 Attach the paper guide A (b), the paper guide B (c) and the paper guide C (d) to the tray base (a).

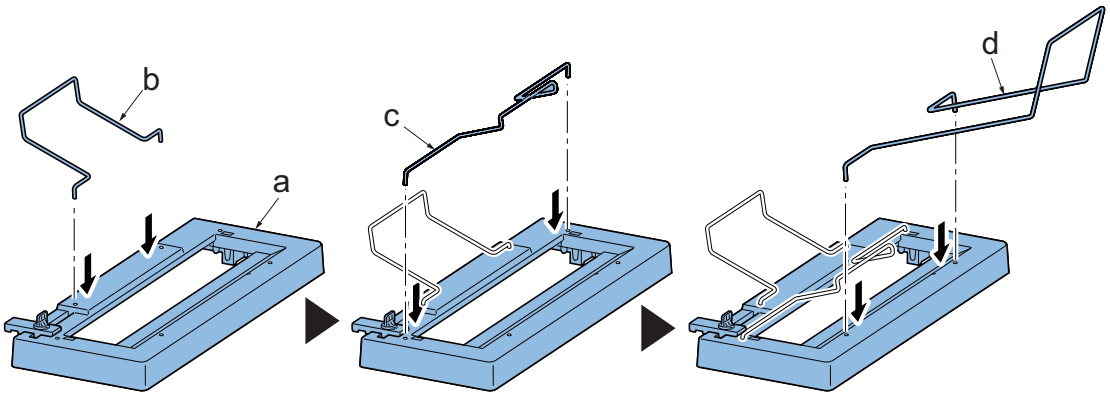

2 Unlock the stopper (a) and move it outward.

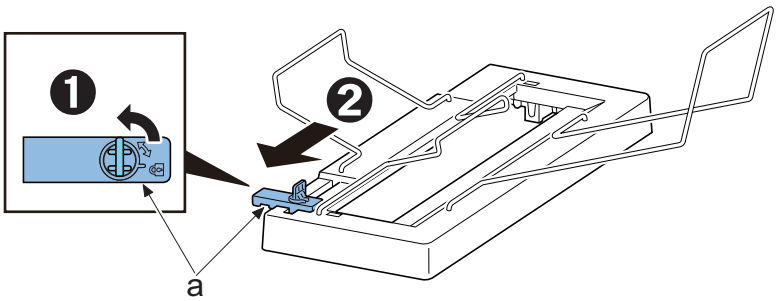

3 Open the multi purpose tray (a).

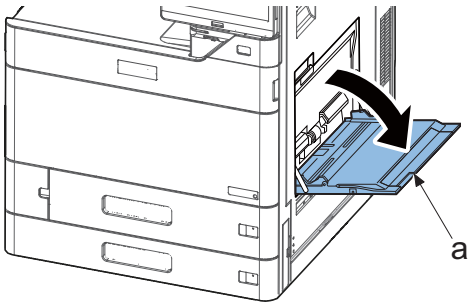

4 Put the banner tray (a) on the MP tray (b) and attach sliding in the direction of the arrow till locking.

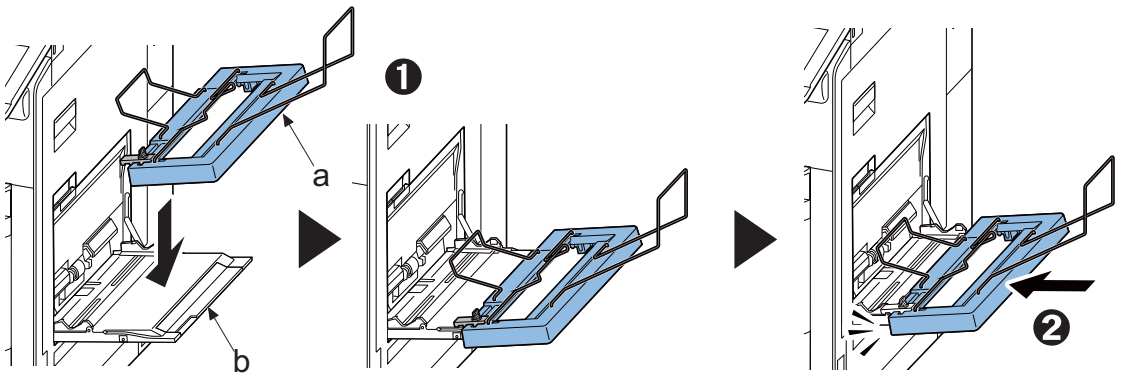

2 - 5 About Optional Applications

Application	
Data Security Kit	Internet FAX kit
Card Authentication Kit*1	Emulation upgrade kit
ThinPrint Option*1	OCR extension kit*1

*1: This can be used on a trial basis for a limited time.

- Restrictions such as the number of times the application can be used during the trial period are different in each applications.
- If you change the date/time while using the trial version of an application, you will no longer be able to use the application.

Starting Use of an Application

Use the procedure below to start using an application.

1 Select [Home] key > [...] > [System Menu] > [Add/Delete Application] > [Optional Function List].

NOTE

If the user authentication screen appears, enter your login user name and login password and select [Login]. Login with administrator privileges.

The factory default login user name and login password are set as shown below.

Model Name	Login User Name	Login Password
40 ppm model	4000	4000
50 ppm model	5000	5000
60 ppm model	6000	6000
70 ppm model	7000	7000

2 Select the desired application to start use and select [Activate].

- You can see detailed information on the selected application by selecting [Details].

Item
Function
License
Trial Counts
Date of Trial
Status

3 Select [Official] and enter a license key.

Some applications do not require you to enter a license key. If the license key entry screen does not appear, go to Step 4.

To use the application as a trial, select [Trial] without entering the license key.

4 Select [Yes] in the confirmation screen.

Icons of activated application are displayed in the Home screen.

NOTE

If you started the Security Kit or Thin Print option and entered the license key, turn the power OFF/ON. Icons of activated application are displayed in the Home screen.

3 Machine Design

3 - 1 Mechanical Configuration

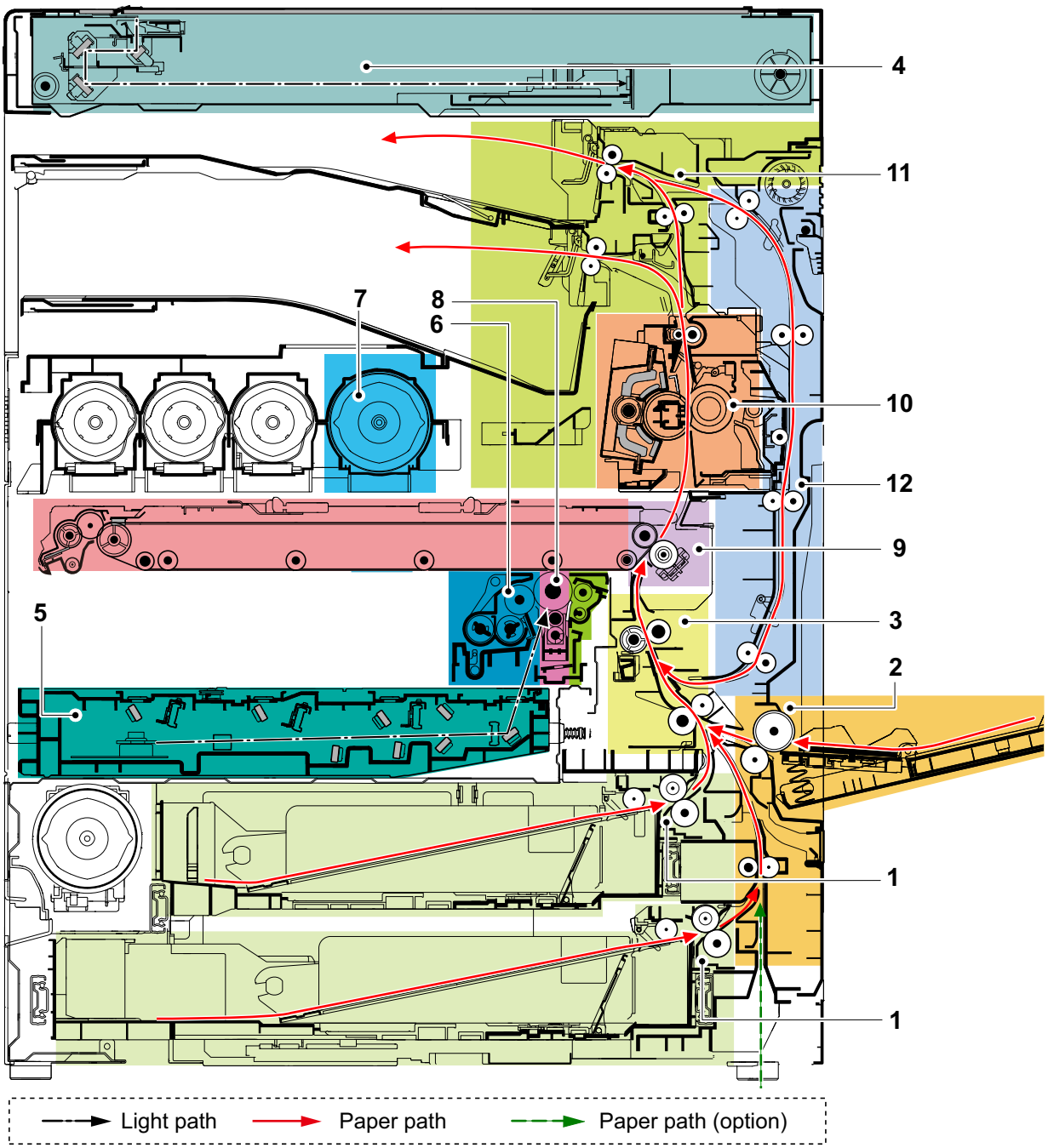

1 Cassette paper feed section
2 MP paper feed section
3 Paper conveying section
4 Image scanner unit
5 Laser scanner unit
6 Developer unit
7 Toner container
8 Drum unit
9 Transfer and separation section
10 Fuser section
11 Exit and branch section
12 Duplex conveying section

3 - 2 Extension device construction (optional)

(1)Paper feeder cross-section view (PF-7140)

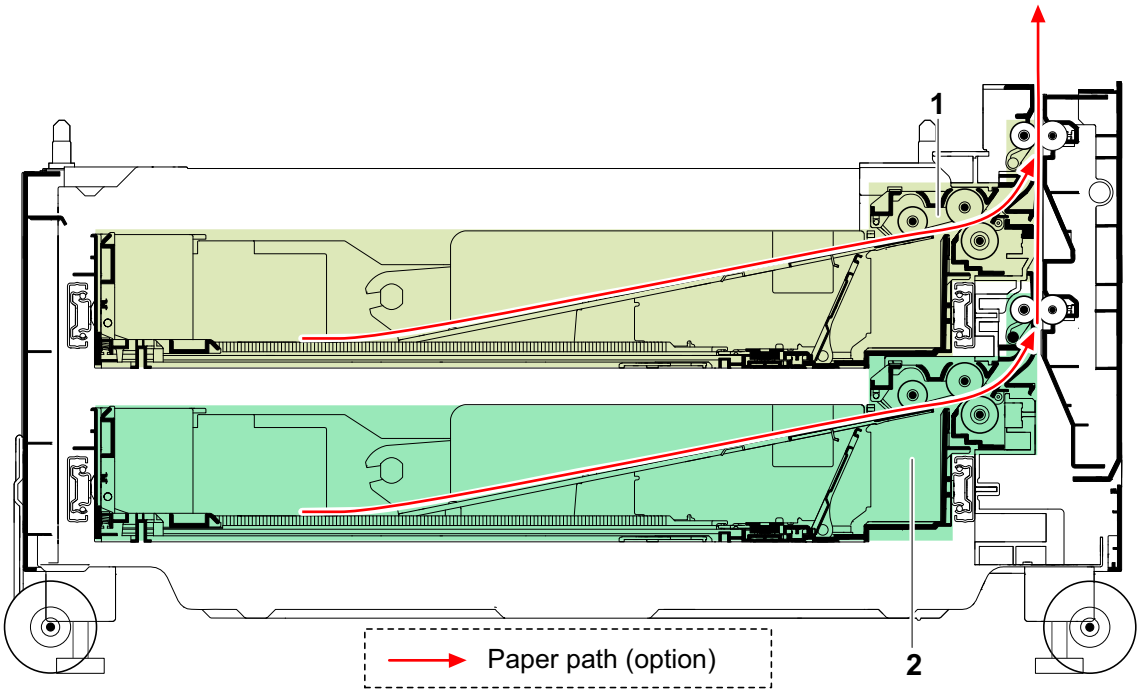

1 Upper feed section (Cassette 3)
2 Lower feed section (Cassette 4)

(2)Large capacity feeder cross-section view (PF-7150)

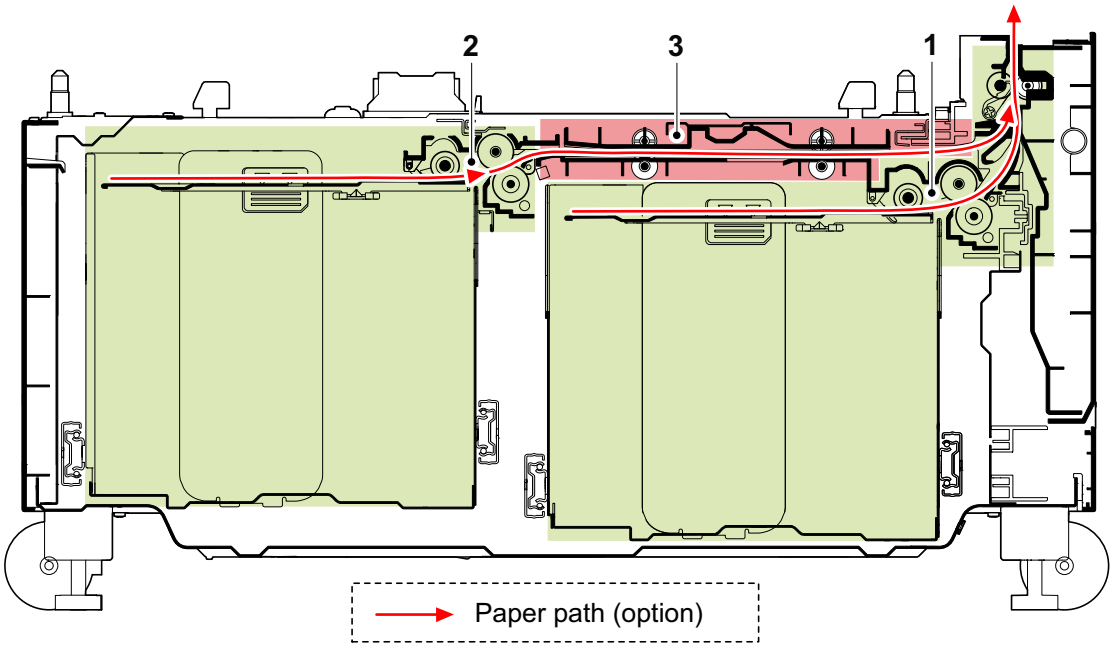

1 Right feed section (Cassette 3)
2 Left feed section (Cassette 4)
3 Paper conveying section

(3)Side Deck cross-section view (PF-7120)

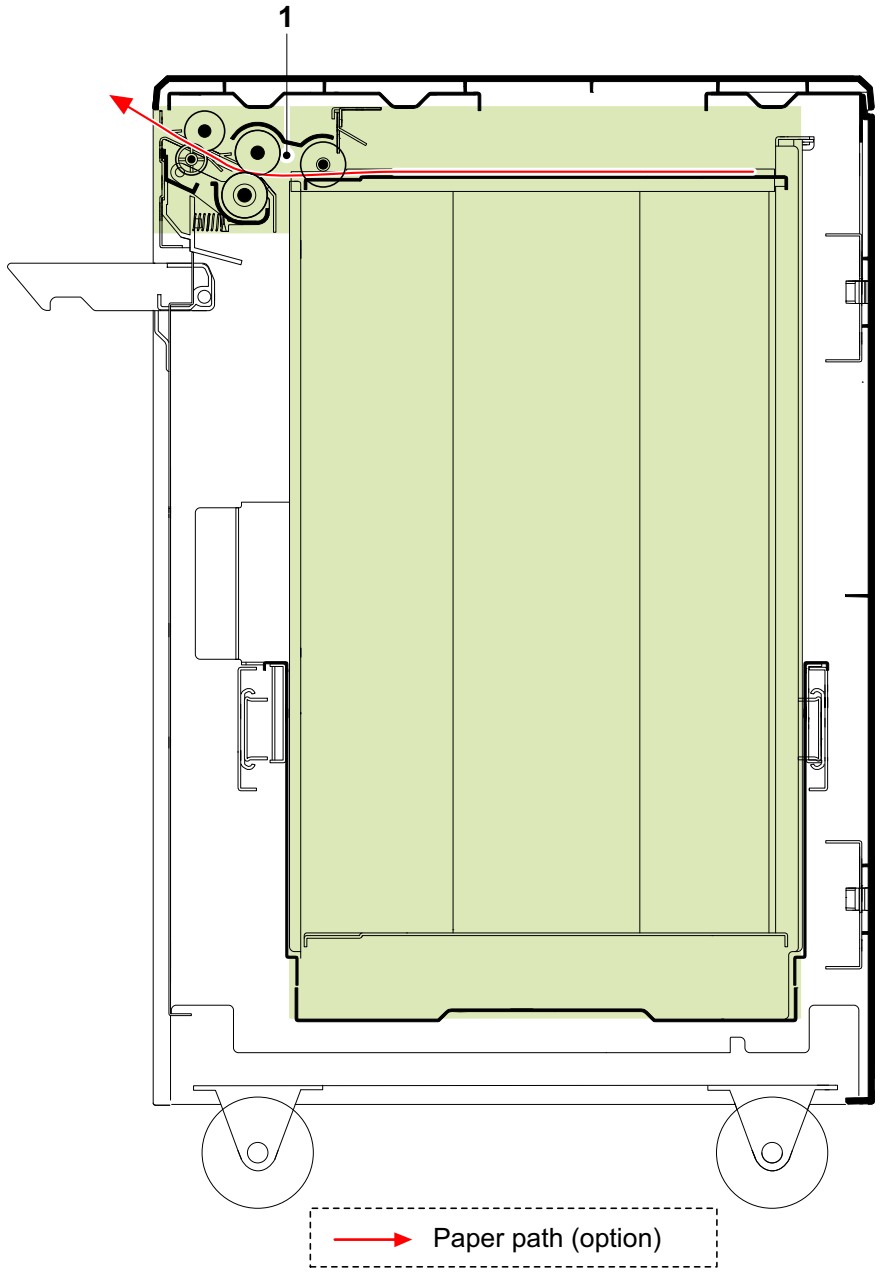

1 Feed section (Cassette 5)

(4)Document processor cross-section view (DP-7150)

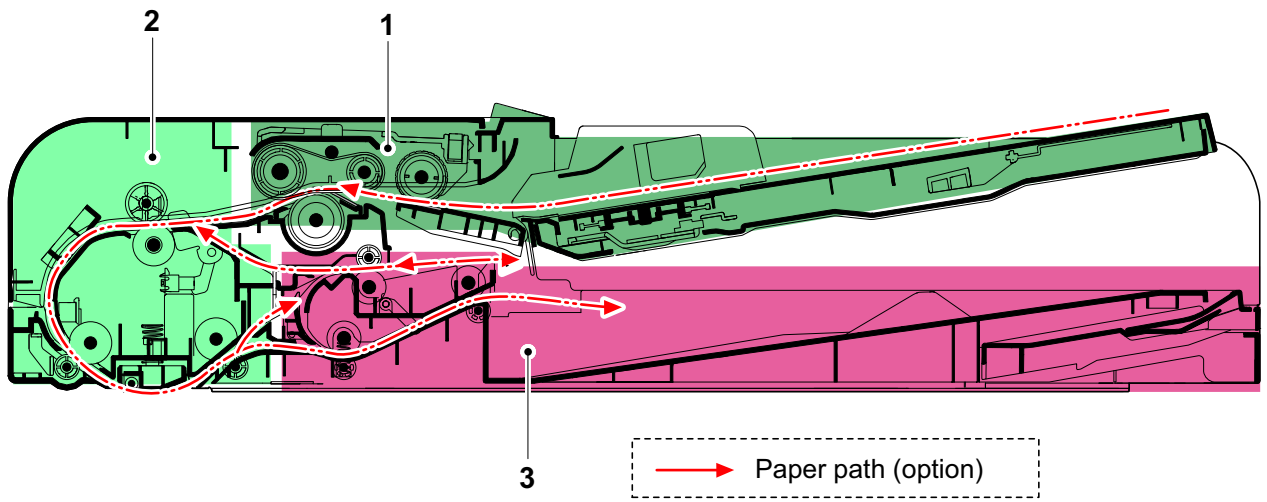

1 DP feed section
2 DP conveying section
3 DP exit switchback section

(5)Document processor cross-section view (DP-7160/DP-7170)

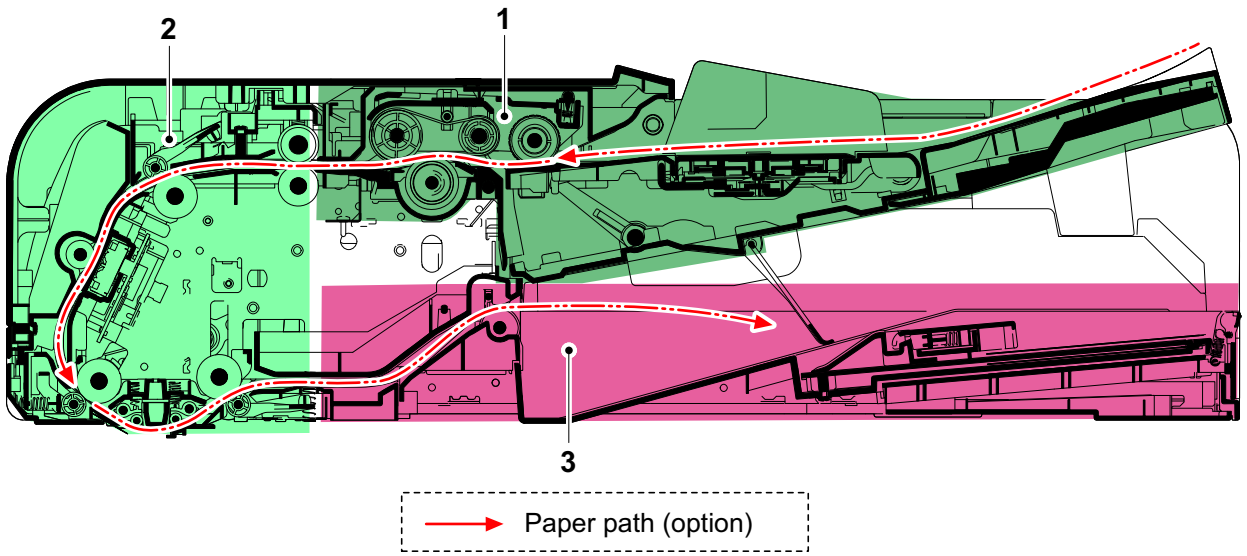

1 DP feed section
2 DP conveying section
3 DP exit section

(6)Job separator cross-section view (JS-7100)

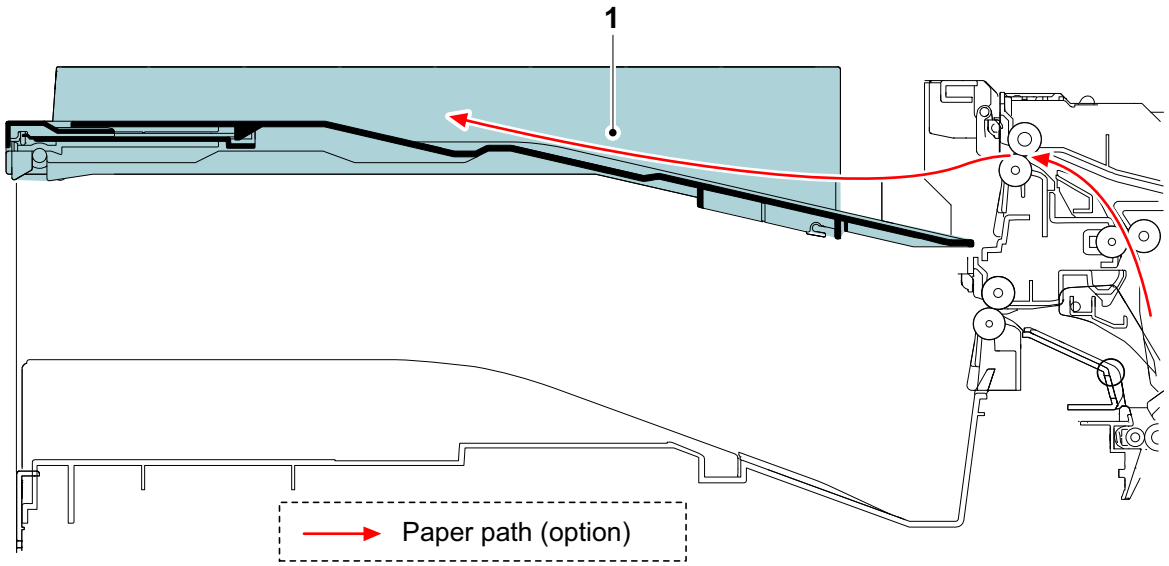

1 Exit section (Tray)

(7)Inner shift tray cross-section view (JS-7110)

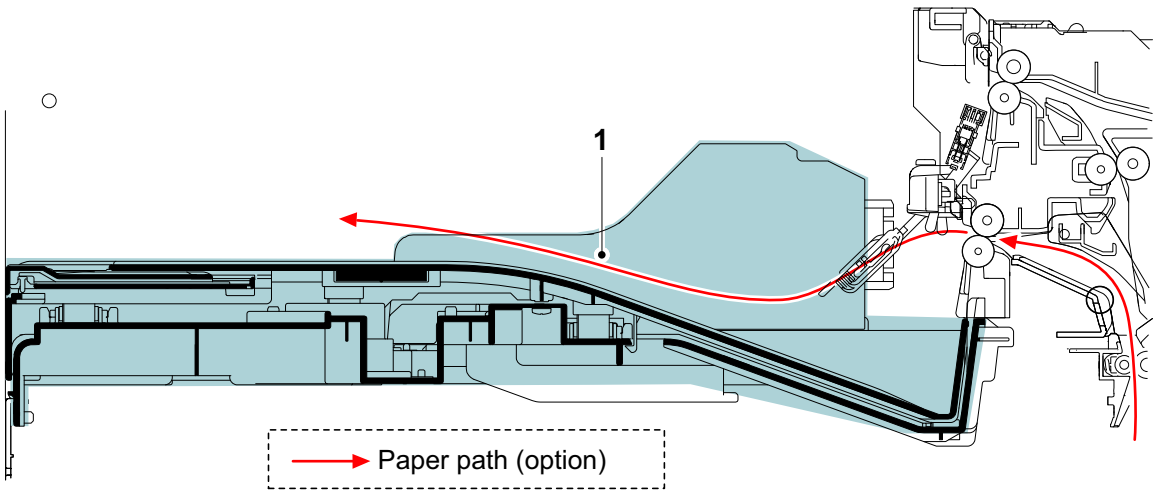

1 Exit section (Tray)

(8)Attachment Kit cross-section view (AK-7110)

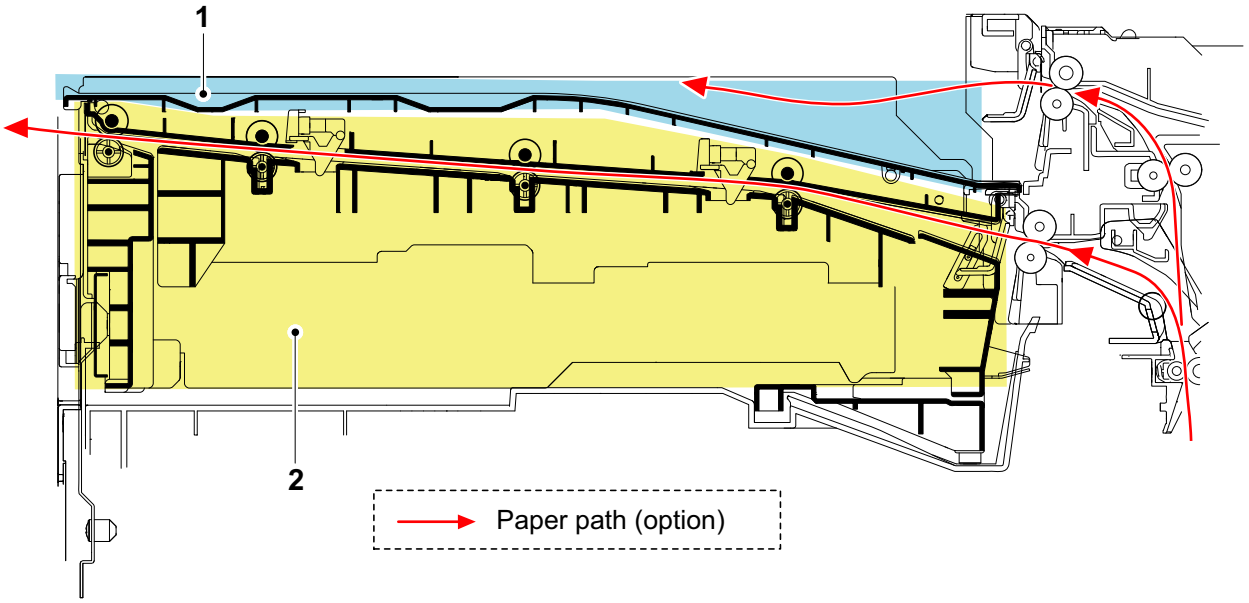

1 BR exit section

2 BR conveying section

(9)Inner finisher cross-section view (DF-7100)

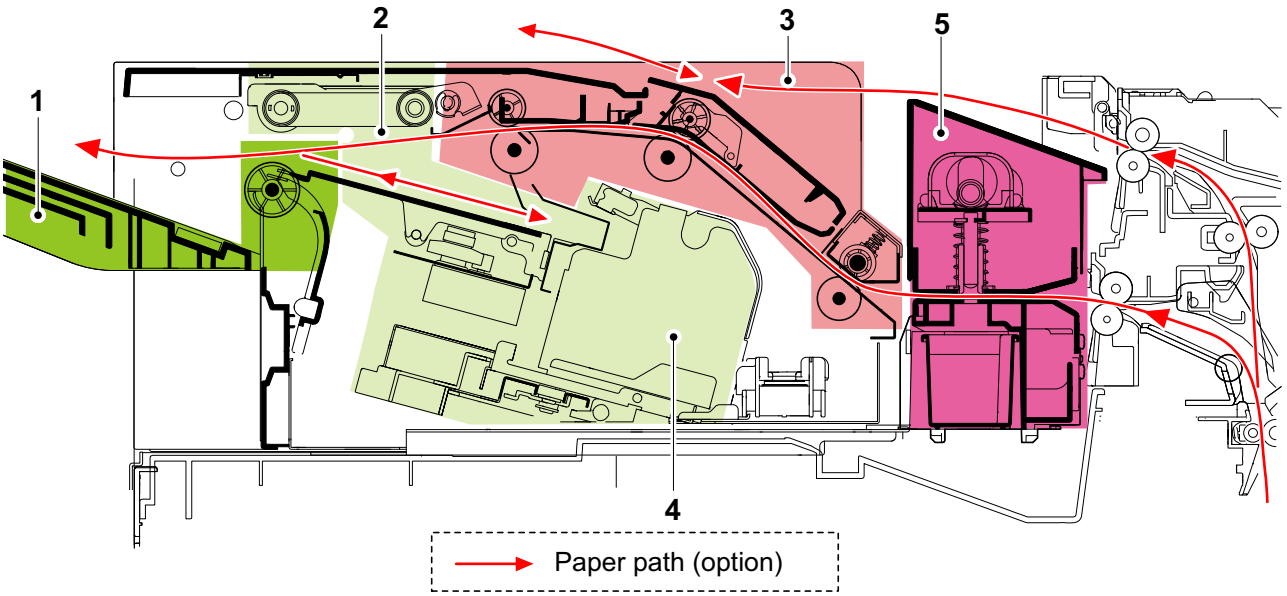

1 DF exit section
2 DF conveying section
3 DF switchback section
4 Staple unit
5 Punch unit (optional)

(10)4000-sheet Finisher cross-section view (DF-7140)

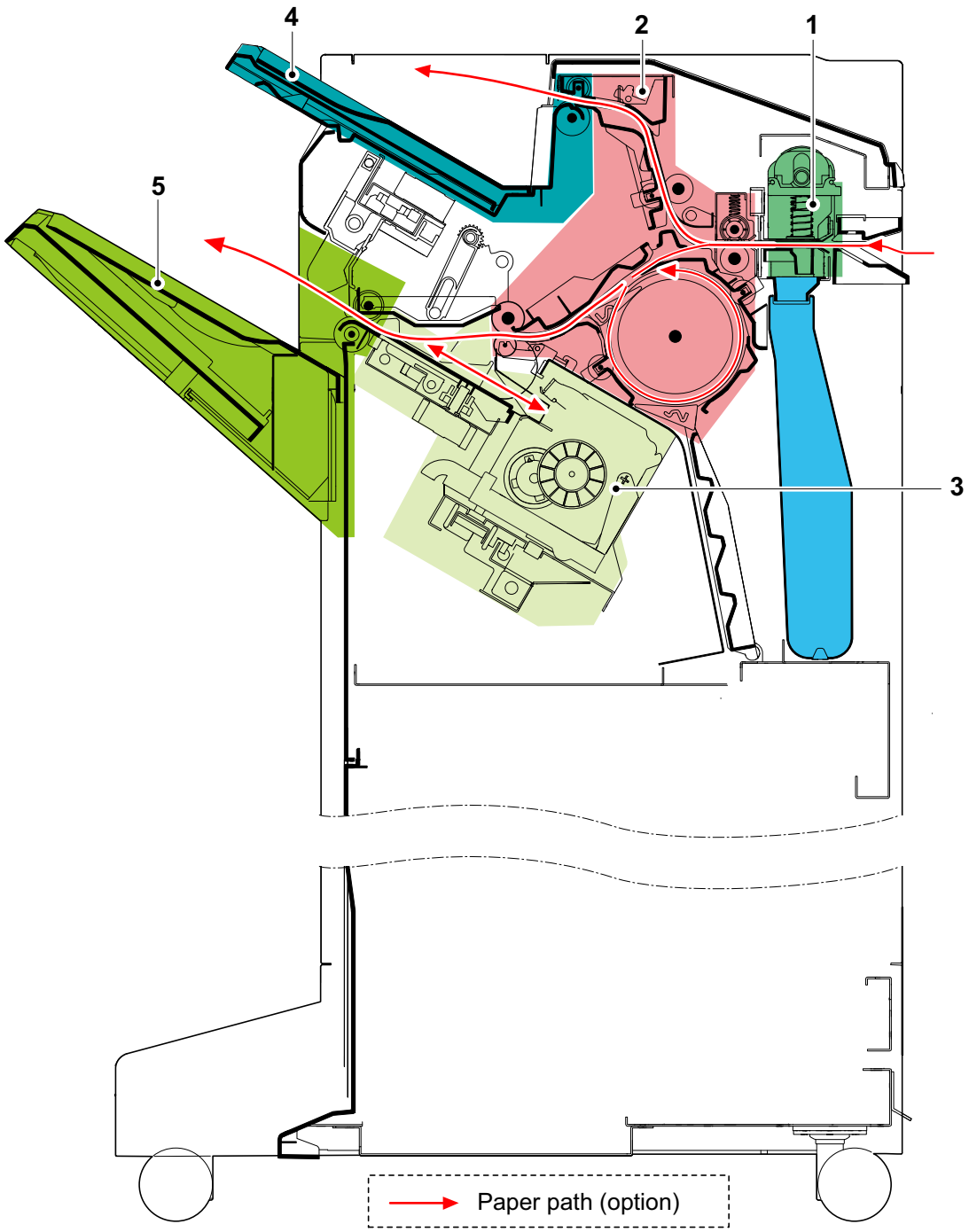

1 Punch unit
2 DF conveying section
3 Staple unit
4 Exit section (Tray B)
5 Exit section (Tray A)

(11)1000-sheet Finisher cross-section view (DF-7120)

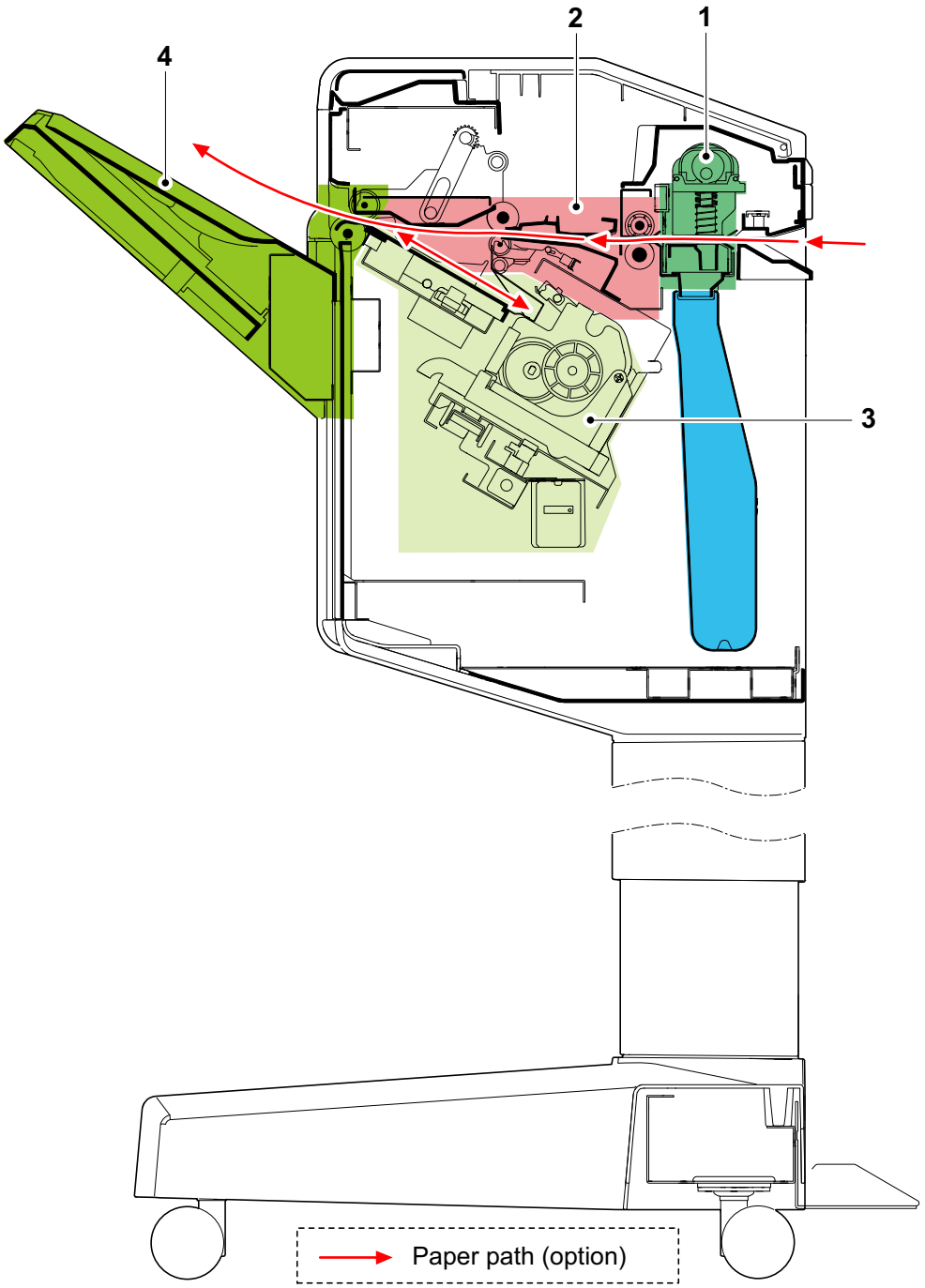

1 Punch unit
2 DF conveying section
3 Staple unit
4 Exit section (Main tray)

(12)Mailbox cross-section view (MT-730(B))

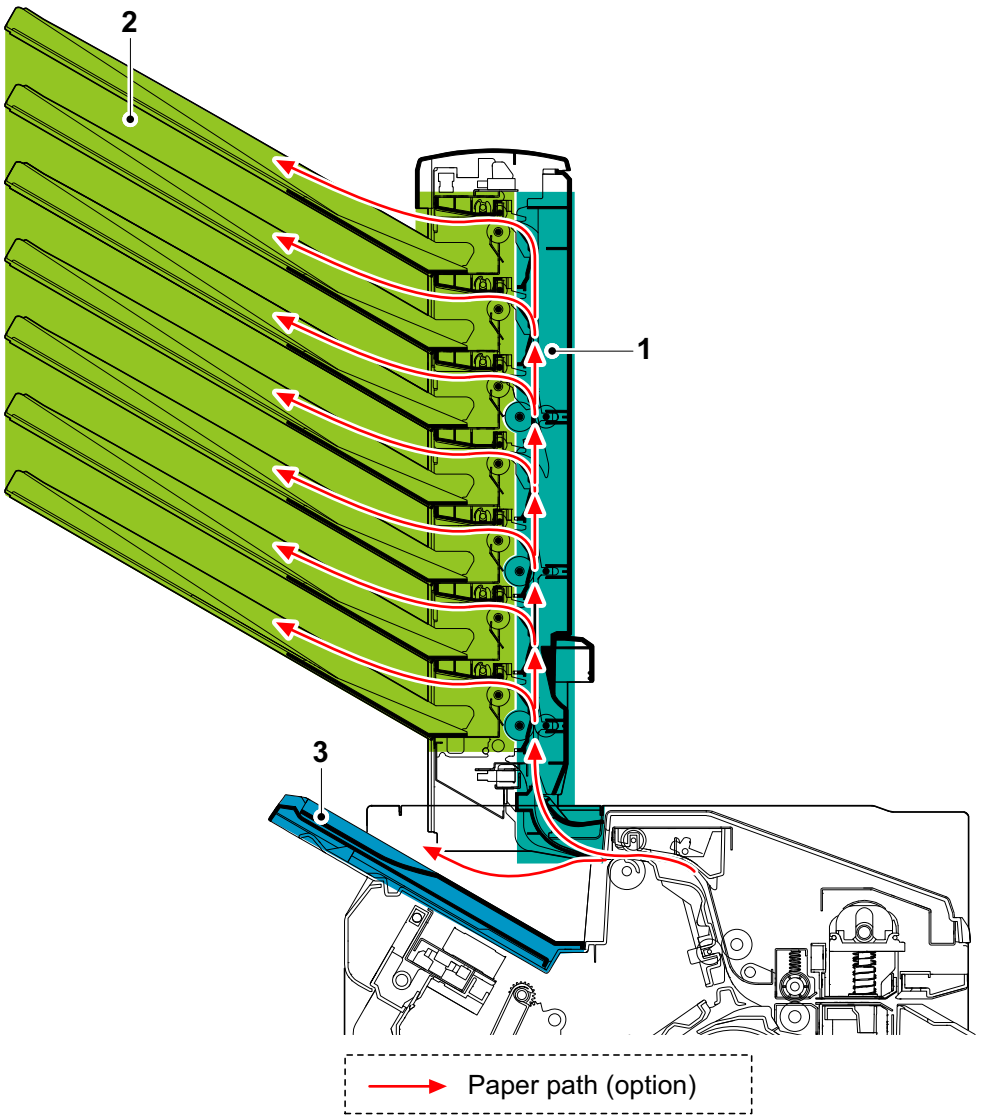

1 Paper conveying section
2 Exit section (Mail tray)
3 Exit section (Tray B)

(13)Folding unit cross-section view (BF-730)

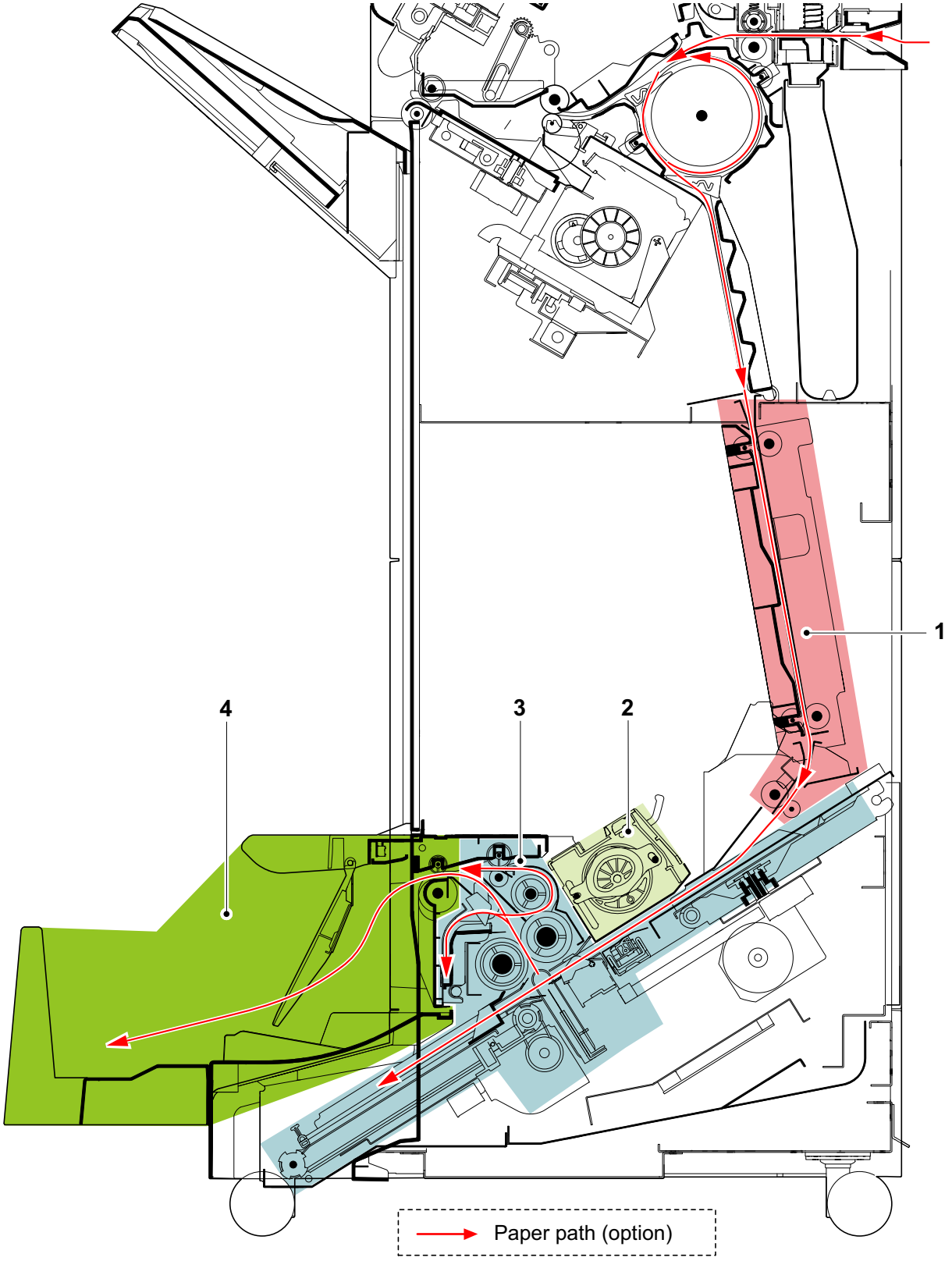

1 Paper conveying section
2 Staple unit
3 Paper folding section
4 Exit section

(14)100 sheet staple finisher cross-section view (DF-7150)
(15)Booklet folding unit cross-section view (BF-9100)

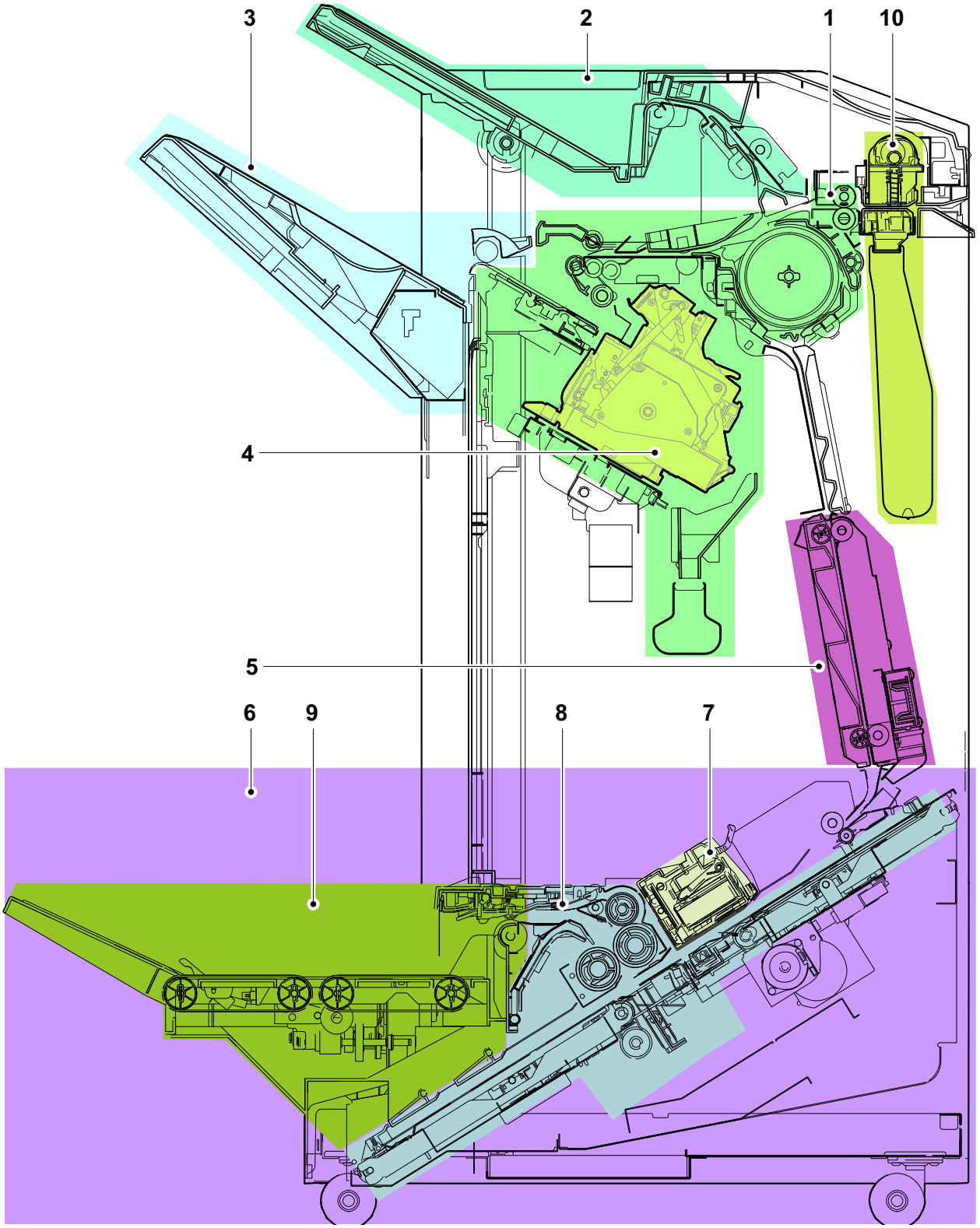

1 DF finishing section
2 Exit section (Tray B)
3 Exit section (Tray A)
4 DF staple unit
5 BF bridge section
6 Booklet folding unit
7 BF staple unit
8 BF fold section
9 BF conveying section
10 Punch unit

(16)Inserter cross-section view (IS-9100)

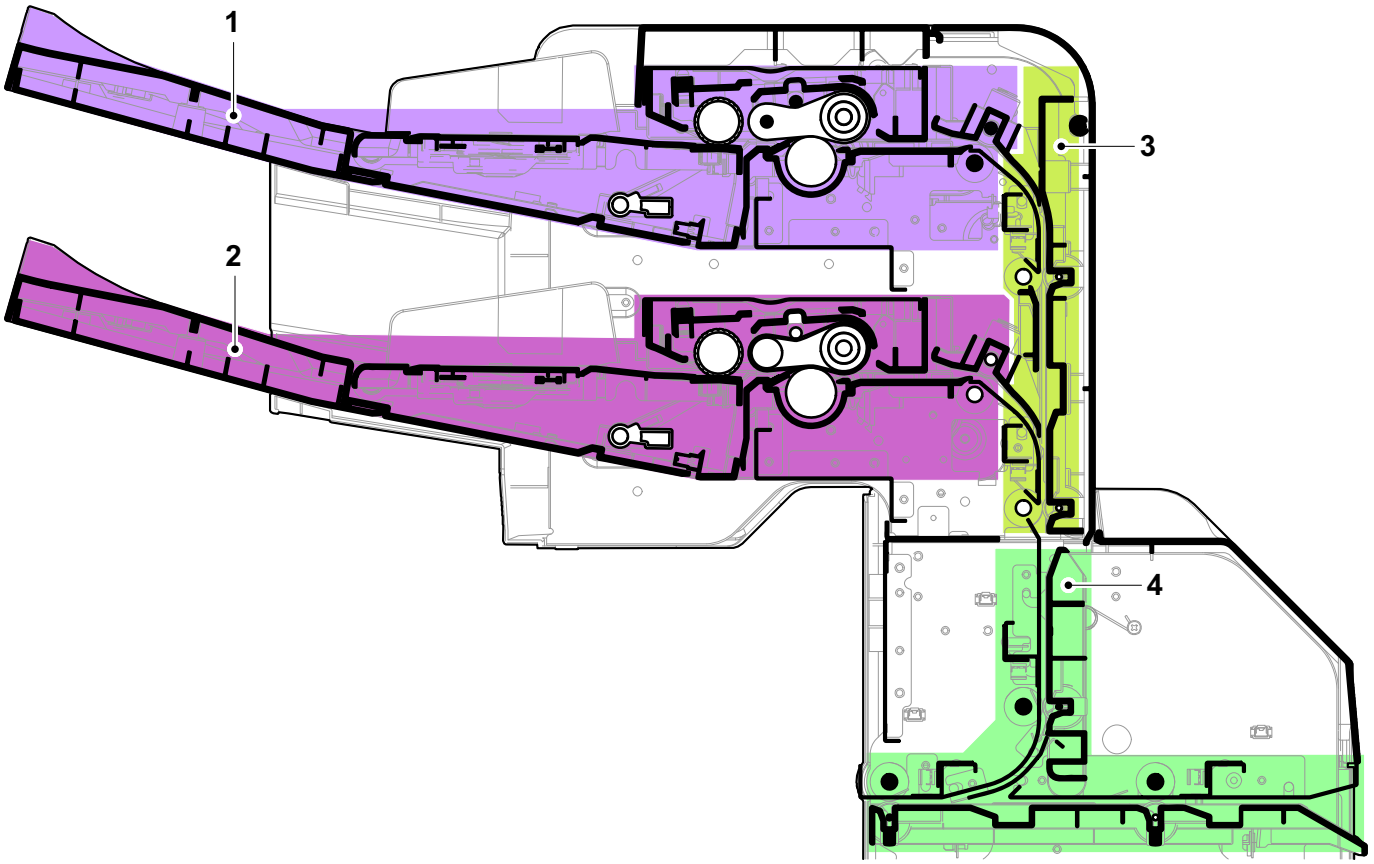

1 IS upper feed section
2 IS lower feed section
3 IS conveying section
4 IS Confluence section

(17)Z-folding unit cross-section view (ZF-9100)

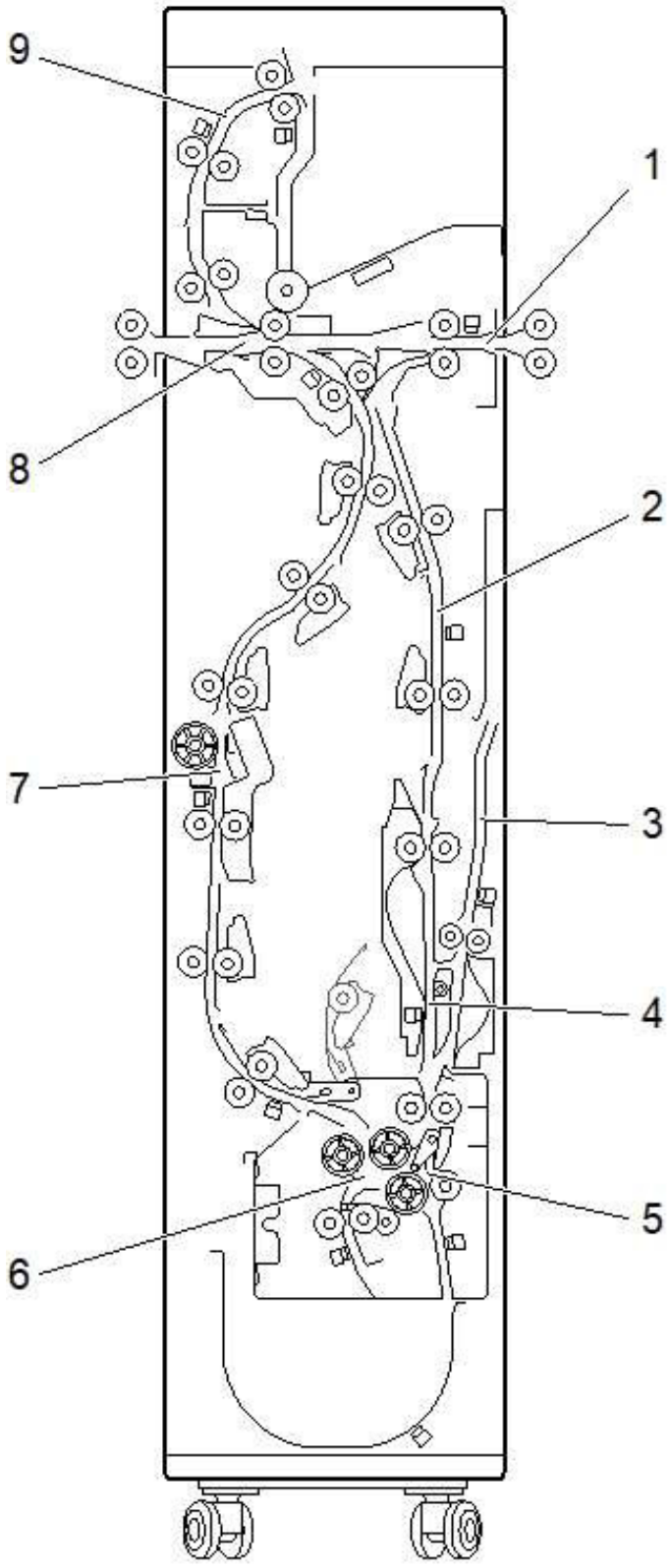

1 ZF inlet conveying section
2 ZF regist front conveying section
3 ZF Paper Stack conveying section
4 ZF regist conveying section
5 ZF first folding section
6 ZF second folding section
7 ZF Increase fold section
8 ZF horizontal conveying section
9 ZF paper folding tray exit section

3 - 3 Electric parts

(1)Electric parts layout

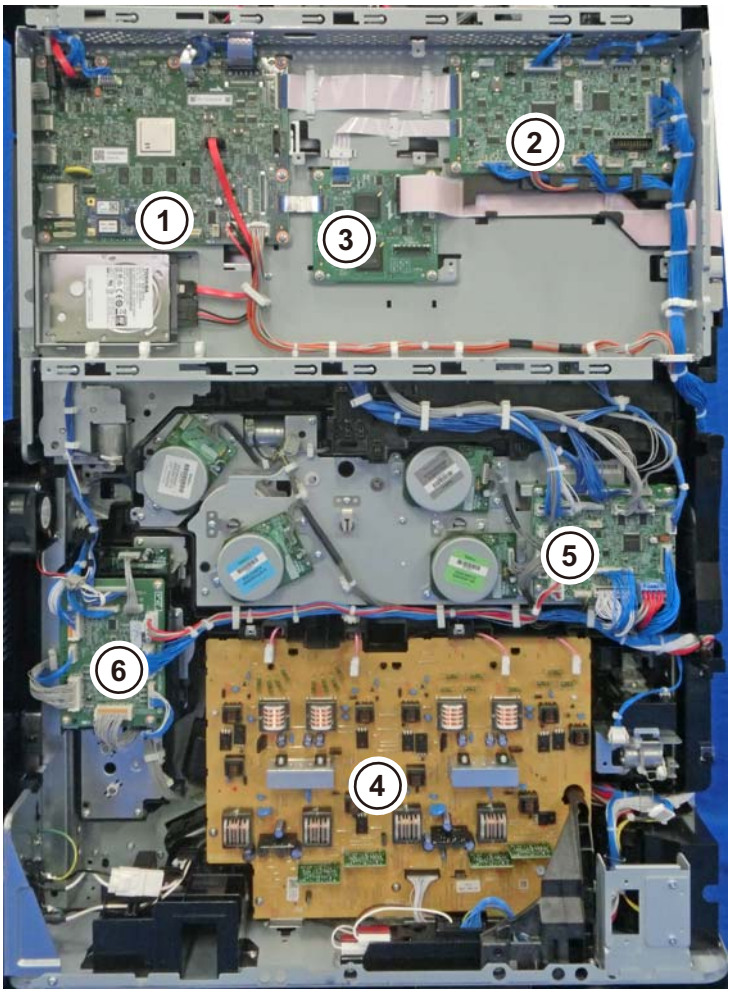

1 Main PWB
2 Engine PWB
3 Video PWB
4 Main high-voltage PWB
5 Image drive PWB
6 Feed drive PWB

(2)Descriptions about the major PWBs

(2-1)Main PWB

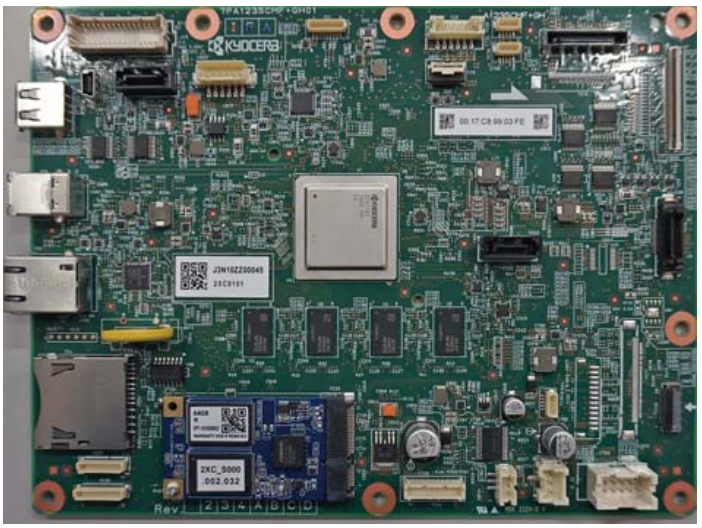

Controlling the entire firmware to control the interface to the PC and network and image data process, etc.

(2-2)Engine PWB

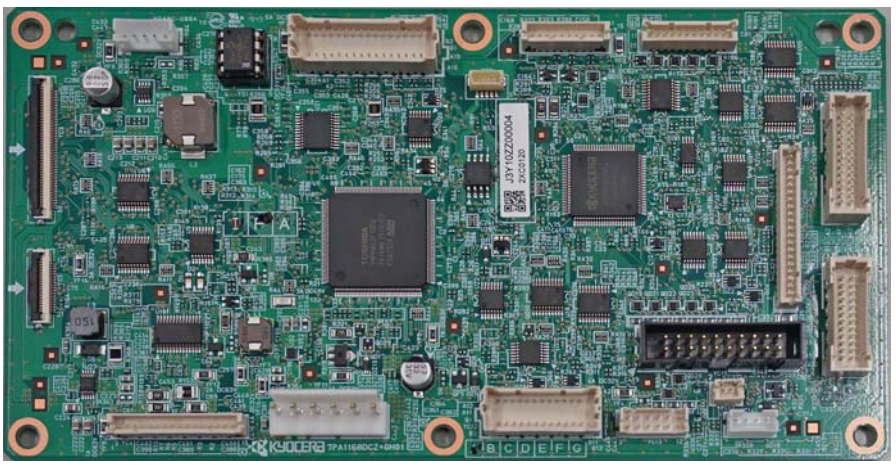

It controls the hardware such as high-voltage/bias output, the image scanner unit, and the paper conveying system.

(2-3)Main high-voltage PWB

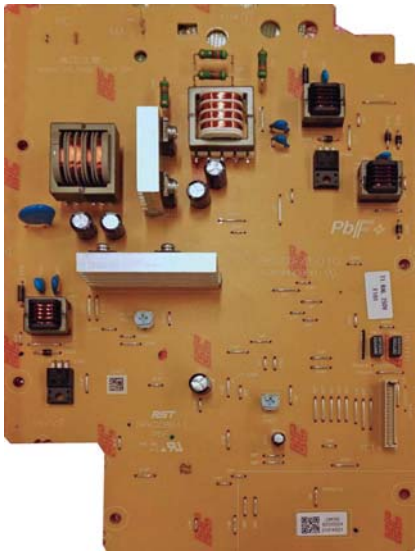

Output high voltage for main charger and developer bias.

(2-4)Transfer high-voltage PWB

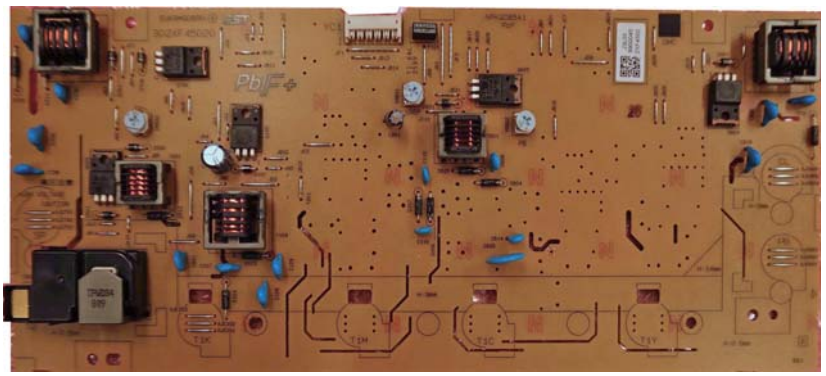

Output the transfer bias, separation bias and transfer cleaning bias.

(2-5)Power supply PWB

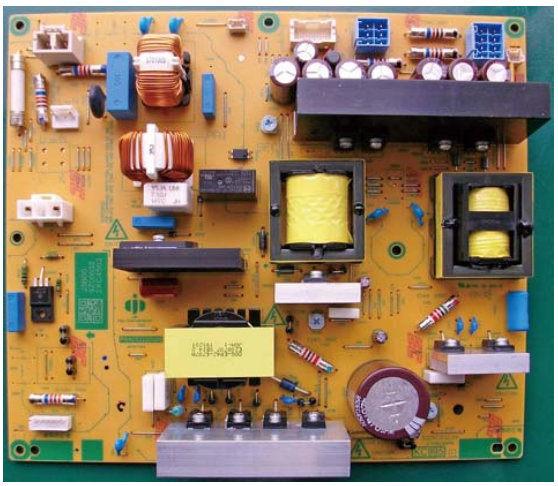

The input voltage (AC) from the AC power supply is changed to DC such as DC24V, and it controls the fuser heater.

(2-6)IH PWB

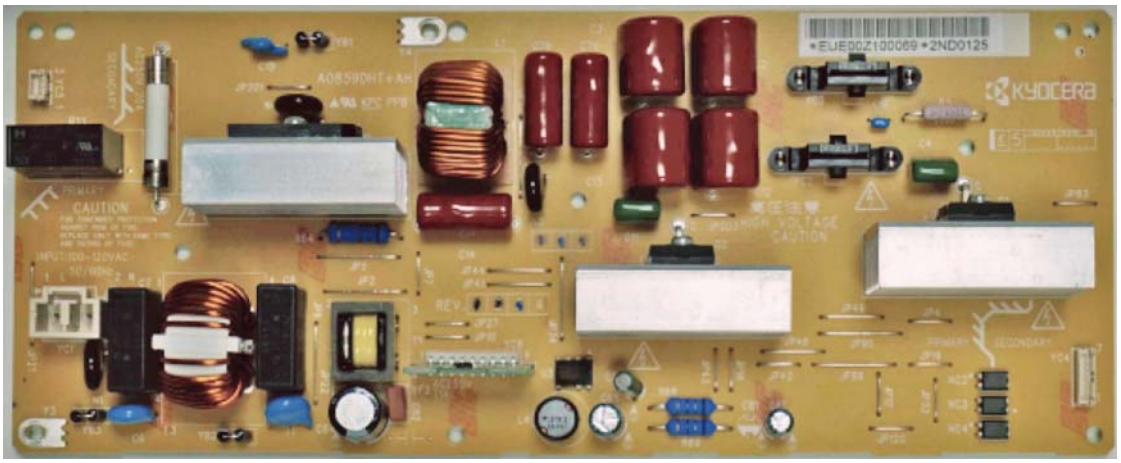

IH PWB controls heat up system for fusing belt.

(2-7)Operation panel main PWB

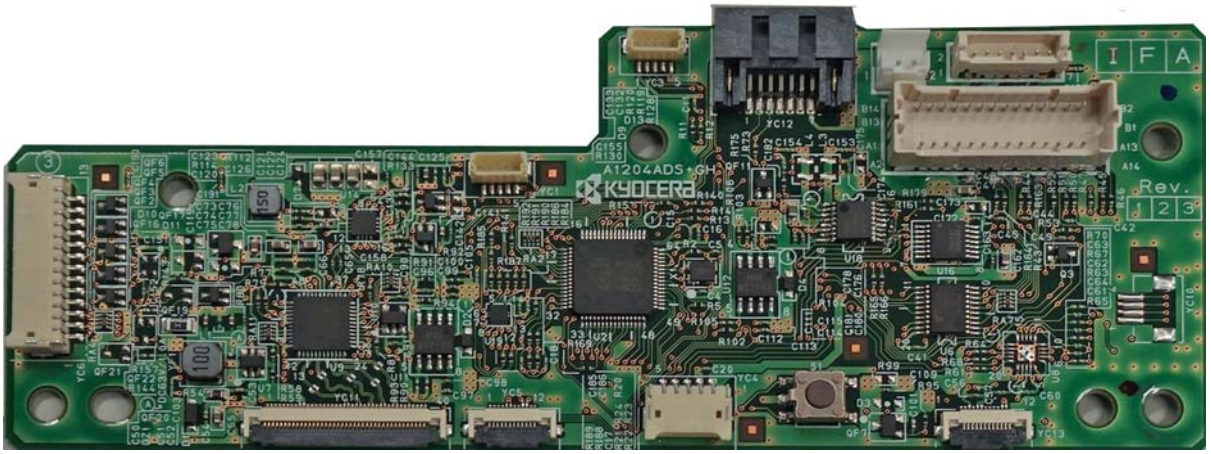

This PWB controls LCD, LED indicators and keys on operation panel.

(2-8)Fuser high-voltage PWB

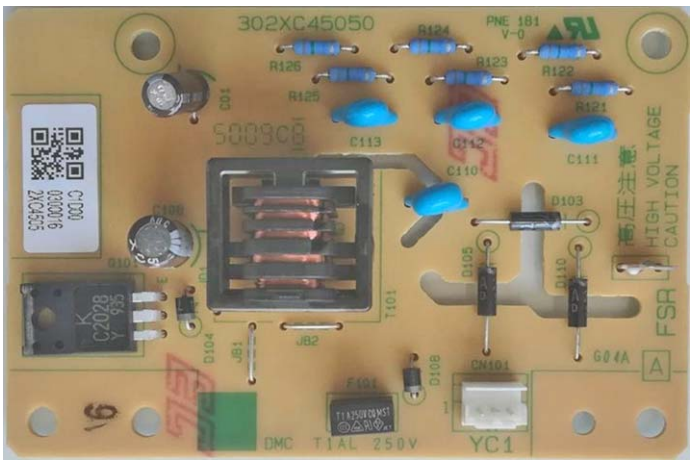

Output high voltage for fuser unit.

(3)PWBs

(3-1)Locations

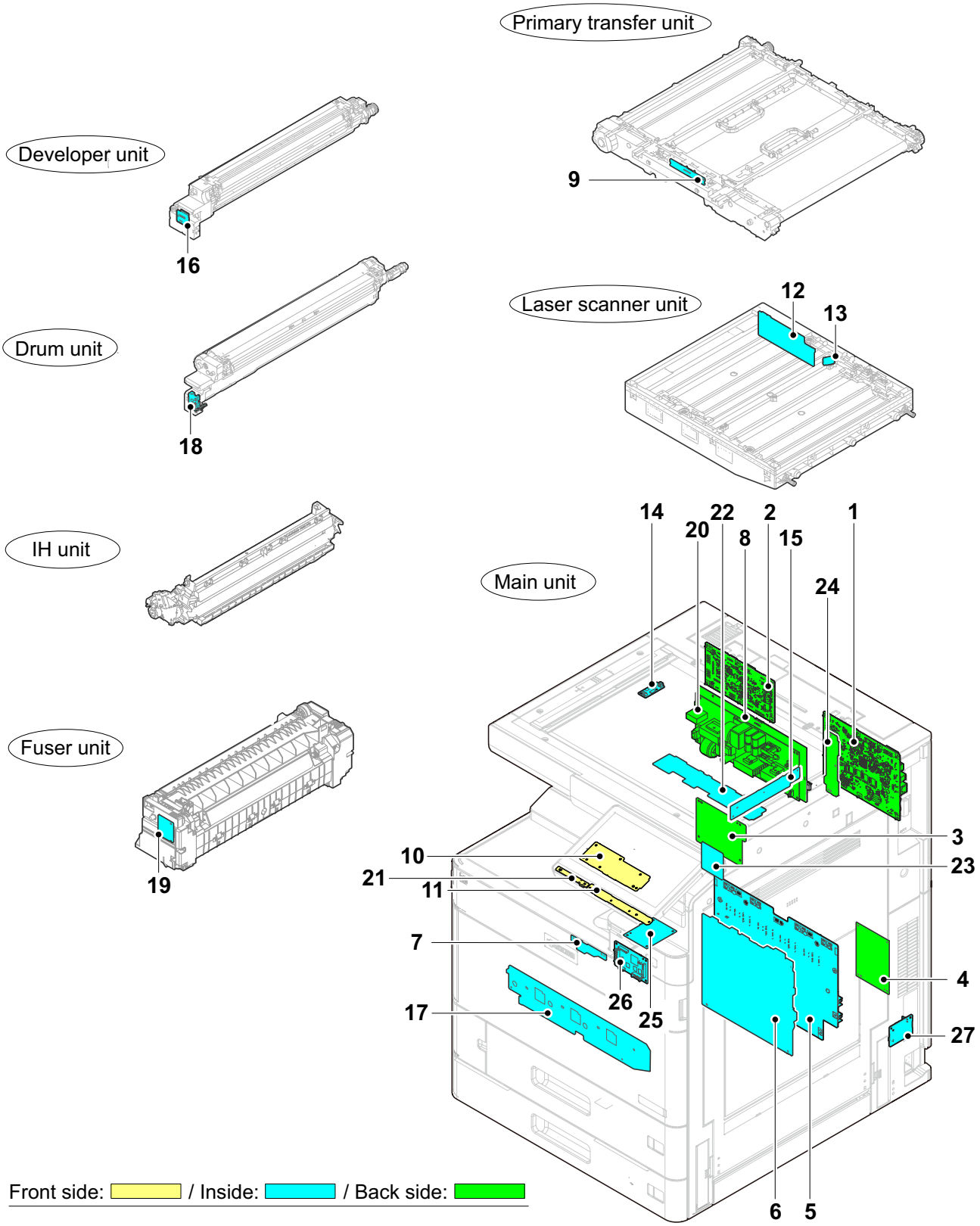

1	Main PWB	Controlling the entire software to control the interface to the PC and network and image data process, etc. Controlling the entire hardware to control operation section.
2	Engine PWB	Controlling the hardware such as electric parts drive, high voltage, bias output, image scanner unit, paper conveying, fuser temperature, etc.
3	Image drive PWB	Consisting of the engine PWB and wiring relay circuit for drum units, developer units, fuser drive section and exit drive section.
4	Feed drive PWB	Relay circuit for engine PWB and paper feed/conveying drive section.
5	Main high-voltage PWB	Generating main charger bias and developer bias.
6	Power supply PWB	Rectifying the AC power input to the full-wave and converting it to DC.
7	Transfer connect PWB	Relay circuit for image drive PWB and transfer PWB.
8	Transfer high-voltage PWB	Generating the transfer bias, separation bias and transfer cleaning bias.
9	Transfer PWB	Storing individual information on EEPROM. Relay board the belt cleaning motor/belt thermistor and image drive PWB.
10	Operation panel main PWB	Relay board for the main PWB, the operation panel sub PWB and the LCD.
11	Operation panel sub PWB	Board for LED indicator and the key switches.
12	APC PWB	Generate and control the laser beam.
13	PD PWB	Control the laser beam synchronize timing.
14	LED drive PWB	Controlling the LED.
15	image sensor PWB	Scanning the original image.
16	Developer PWB K	Relay board for the electric parts inside developer unit, and storing developer information on EEPROM.
17	Drum/Developer relay PWB	Relay board for the front drive PWB and drum units/developer units.
18	Drum PWB K	Relay board for the electric parts inside drum unit, and storing the drum information on EEPROM.
19	Fuser PWB	Relay board for the electric parts inside fuser unit, and storing the fuser information on EEPROM.
20	IH PWB	Controlling the fuser IH.
21	NFC PWB	Antenna circuit for wireless communication.
22	RFID PWB	Reading the toner container information.
23	USB hub PWB	USB slot distribution.
24	KUIO relay PWB	Relay board for the main PWB and FAX PWB.
25	Fuser high-voltage PWB	Discharge the fuser belt.
26	Front drive PWB	Relay board for the Image drive PWB, the container drive and exit parts.
27	Current PWB *1	Converts the AC current input to the analog signal and delivers.

*1: 120 V models only

(3-2)Parts name table (PWB)

Name used in service manual	Name used in parts list	Part. No.
1 Main PWB	PARTS PWB MAIN ASSY SP	302XF9411_
2 Engine PWB	PARTS PWB ENGINE ASSY SP	302XF9408_
3 Image drive PWB	PARTS PWB IMAGE DRIVE ASSY SP	302XF9409_
4 Feed drive PWB	PARTS PWB FEED DRIVE ASSY SP	302XC9402_
5 Main high-voltage PWB	PARTS UNIT HIGH VOLTAGE MAIN SP	302XF9403_
6 Power supply PWB	PARTS UNIT LOW VOLTAGE SP	302XC9416_
7 Transfer connect PWB	PARTS PWB TRANSFER CONNECT ASSY SP	302ND9429_
8 Transfer high-voltage PWB	PARTS UNIT HIGH VOLTAGE TRANSFER SP	302XF9404_
9 Transfer PWB	- (MK-8535A)	- (1702YL0JP_)
10 Operation panel main PWB	PARTS PWB PANEL ASSY SP (PARTS OPERATION UNIT H SP)	302XC9432_ (302XC9422_)
11 Operation panel sub PWB	PARTS PWB OPERATION ASSY SP (PARTS OPERATION UNIT H SP)	302XC9405_ (302XC9422_)
12 APC PWB	- (LK-6510)	- (302XF9303_)
13 PD PWB	- (LK-6510)	- (302XF9303_)
14 LED PWB	PARTS MOUNT LED ASSY SP	302XC9303_
15 image sensor PWB	- (PARTS ISU ASSY SP)	- (302XC9304_)
16 Developer PWB K	- (DV-8570K	- (302XC9307_)
17 Drum/Developer relay PWB	PARTS PWB DRUM DLP CONNECT ASSY SP	302XF9401_
18 Drum PWB K	- (DK-8560)	- (302XC9305_)
19 Fuser PWB	- (FK-8570)	- (302YL9301_)
20 IH PWB	PARTS PWB IH 100 ASSY SP PARTS PWB IH 100 ASSY SP	302ND9430_ *2 302XC9434_ *3
21 NFC PWB	PARTS PWB NFC ASSY SP	302RH9405_
22 RFID PWB	PARTS PWB RFID ASSY SP	302ND9426_
23 USB hub PWB	PARTS PWB USB HUB ASSY SP	302XC9404_
24 KUIO relay PWB	PARTS PWB KUIO ASSY SP	302XN9401_
25 Fuser high-voltage PWB	PARTS UNIT HIGH VOLTAGE FUSER SP	302XC9406_
26 Front drive PWB	PARTS PWB FRONT DRIVE ASSY SP	302XC9430_
27 Current PWB *1	PWB CURRENT AVE 100 ASSY	302N49421_ *1

*1: 60/70 ppm models only, Other than *2: 70 ppm model, *3: 70 ppm model only

(4)Sensors and Switches

(4-1)Locations

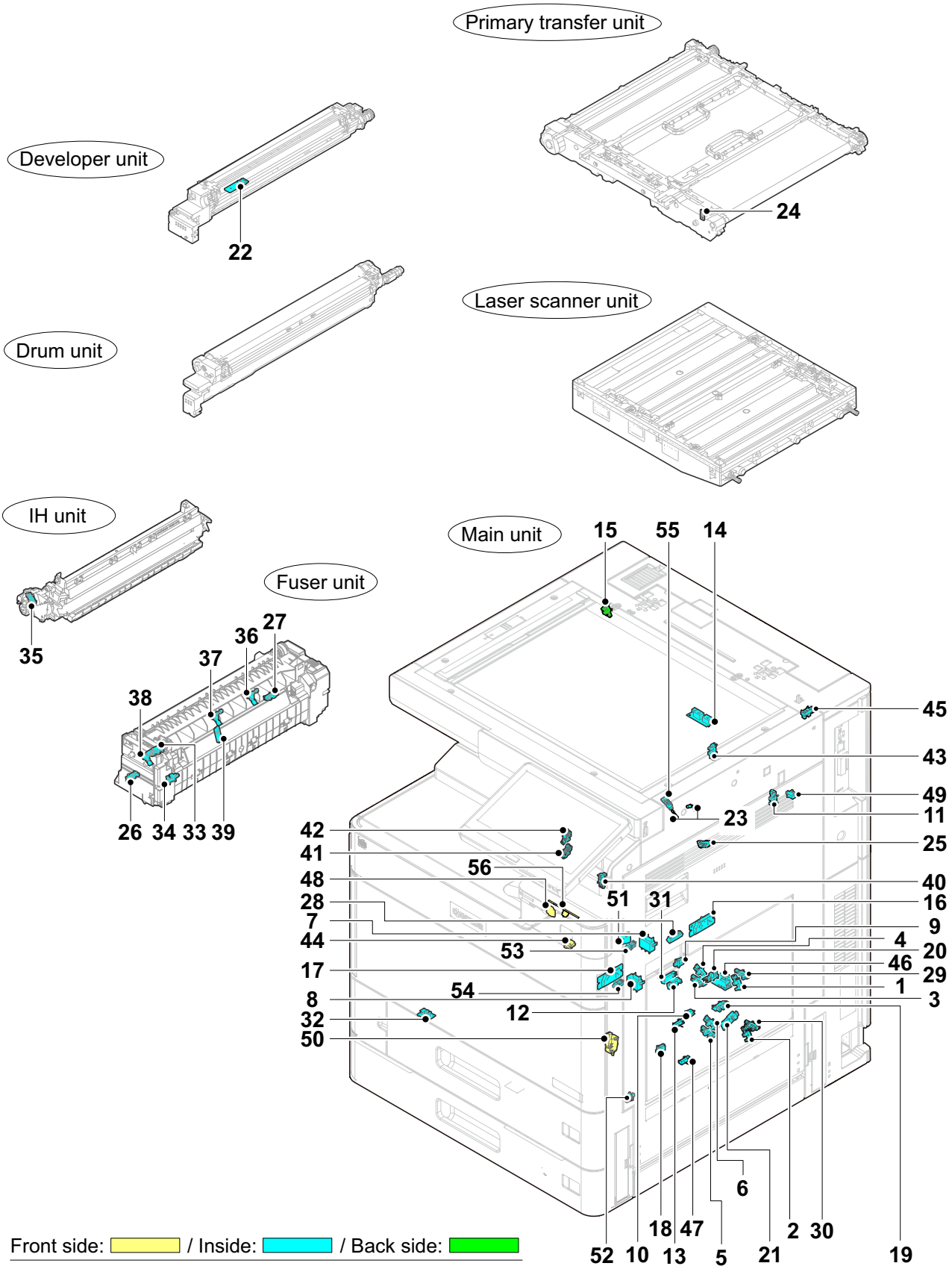

1	MP paper sensor 1	Detecting paper in the cassette 1.
2	MP paper sensor 2	Detecting paper in the cassette 2.
3	Lower paper gauge sensor 1	Detecting the level of the remaining paper inside the cassette 1.
4	Upper paper gauge sensor 1	Detecting the level of the remaining paper inside the cassette 1.
5	Lower paper gauge sensor 2	Detecting the level of the remaining paper inside the cassette 2.
6	Upper paper gauge sensor 2	Detecting the level of the remaining paper inside the cassette 2.
7	Paper length sensor 1	Detecting the paper length in the cassette 1.
8	Paper length sensor 2	Detecting the paper length in the cassette 2.
9	Paper width sensor 1	Detecting the paper width in the cassette 1.
10	Paper width sensor 2	Detecting the paper width in the cassette 2.
11	Duplex sensor 1	Detecting paper jam at the duplex section.
12	Duplex sensor 2	Detecting paper jam at the duplex section.
13	Paper feed sensor 1	Detect paper feeding from cassette 1
14	Original size sensor	Detecting the original size
15	Home position sensor	Detecting the position of the image scanner unit.
16	Rear ID sensor	Measuring the image density at the calibration.
17	ID sensor front	Measuring the image density at the calibration.
18	MP tray sensor	Detecting the MP tray open.
19	MP paper sensor	Detecting paper on the MP tray.
20	MP paper length sensor	Detecting the MP paper length.
21	MP paper width sensor	Detecting the MP paper width.
22	T/C sensor K	Detecting the toner concentration in the developer unit and store information on EEPROM (Black)
23	Toner level sensor K	Detecting the toner level in the developer unit (Black)
24	Belt thermistor	Detecting the transfer belt temperature.
25	Belt release sensor	Detecting the transfer belt release position.
26	Front belt rotation sensor	Detecting the fuser rotation position
27	Rear belt rotation sensor	Detecting the fuser rotation position
28	Belt roll-up sensor	Detecting the transfer belt roll-up
29	Lift upper limit sensor 1	Detecting the upper limit when lifting the bottom plate inside the cassette 1.
30	Lift upper limit sensor 2	Detecting the upper limit when lifting the bottom plate inside the cassette 2.
31	Registration sensor	Controlling the timing to start the secondary paper feeding.
32	Weight detection sensor	Detecting the waste toner box weight
33	Fuser jam sensor	Detecting the paper jam at the fuser section.
34	Press-release sensor	Detecting the mode of the fuser pressure.

35 IH position sensor	Detecting the IH core home position.
36 Fuser thermistor 1 (Middle)	Detecting the fuser belt temperature. (Middle)
37 Fuser thermistor 2 (Center)	Detecting the fuser belt temperature. (Center)
38 Fuser thermistor 3 (Edge)	Detecting the fuser belt temperature. (Edge)
39 Fuser thermistor 4 (Press)	Detecting the press roller temperature.
40 Exit reversing sensor	Detecting jam at the exit section.
41 Lower exit full sensor	Detecting the paper-full on the inner tray.
42 Upper exit full sensor	Detecting the paper-full on the inner tray.
43 JS sensor	Paper full detection of Job separator and AK unit.
44 Front cover switch	Detecting the right cover open/close.
45 Original size timing sensor	Detecting the opening and closing of the document processor.
46 PF switch	Detecting the paper feeder.
47 Paper feed sensor 2	Detect paper feeding from cassette 2
48 Power switch	Turning on and off for the main, engine and operation panel PWB, etc.
49 Conveying open/close switch	Detecting the conveying section open/close.
50 Right cover switch	Shutting off the 24V power supply when the right cover open.
51 Temperature/humidity sensor	Detecting the external temperature and humidity
52 MP position switch	Detect the position of MP lift plate.
53 PF cassette switch 1	Detecting the cassette 1.
54 PF cassette switch 2	Detecting the cassette 2.
55 Toner motor sensor K	Detect toner motor K driving
56 Motion sensor	Detect approaching person

(4-2)Part name table (Sensors and Switches)

Name used in service manual	Name used in parts list	Part. No.
1 MP paper sensor 1	PARTS SENSOR OPT. SP	302P79401_
2 MP paper sensor 2	PARTS SENSOR OPT. SP	302P79401_
3 Lower paper gauge sensor 1	PARTS SENSOR OPT. SP	302P79401_
4 Upper paper gauge sensor 1	PARTS SENSOR OPT. SP	302P79401_
5 Lower paper gauge sensor 2	PARTS SENSOR OPT. SP	302P79401_
6 Upper paper gauge sensor 2	PARTS SENSOR OPT. SP	302P79401_
7 Paper length sensor 1	SW.PUSH	7SP03090001+H01
8 Paper length sensor 2	SW.PUSH	7SP03090001+H01
9 Paper width sensor 1	SW.PUSH	7SP01000004+H01
10 Paper width sensor 2	SW.PUSH	7SP01000004+H01
11 Duplex sensor 1	PARTS SENSOR OPT. SP	302P79401_
12 Duplex sensor 2	PARTS SENSOR OPT. SP	302P79401_
13 Paper feed sensor 1	SENSOR OPT.	7NXPS122GD4AH01
14 Original size sensor	PARTS SENSOR OPT SP	302ND9480_
15 Home position sensor	PARTS SENSOR OPT. SP	302P79401_
16 Rear ID sensor	PARTS ID SENSOR ASSY SP	302ND9414_
17 ID sensor front	PARTS ID SENSOR ASSY SP	302ND9414_
18 MP tray sensor	SW.PUSH	7SP01000004+H01
19 MP paper sensor	PARTS SENSOR OPT. SP	302P79401_
20 MP paper length sensor	PARTS SENSOR OPT. SP	302P79401_
21 MP paper width sensor	PARTS PWB PAPER SIZE SENSOR ASSY SP	303R39405_
22 T/C sensor K	- (DV-8570K)	- (302XC9307_)
23 Toner level sensor K	- (PARTS TONER HOPPER MONO UNIT SP)	- (302FX9407_)
24 Belt thermistor	- (TR-6510)	- (30XF9302_)
25 Belt release sensor	- (DR-6520)	- (30XF9301_)
26 Front belt rotation sensor	- (FK-8570)	- (302YL9301_)
27 Rear belt rotation sensor	- (FK-8570)	- (302YL9301_)
28 Belt roll-up sensor	PARTS SENSOR OPT. SP	303NW9406_
29 Lift upper limit sensor 1	PARTS SENSOR OPT. SP	302P79401_
30 Lift upper limit sensor 2	PARTS SENSOR OPT. SP	302P79401_

Name used in service manual	Name used in parts list	Part. No.
31 Registration sensor	PARTS SENSOR OPT. SP	303NW9404_
32 Weight detection sensor	PARTS PWB EDGE SENSOR ASSY SP	302K99421_
33 Fuser jam sensor	- (FK-8570)	- (302YL9301_)
34 Fuser pressure release sensor	- (FK-8570)	- (302YL9301_)
35 IH position sensor	- (FK-8570)	- (302YL9301_)
36 Fuser thermistor 1 (Middle)	- (FK-8570)	- (302YL9301_)
37 Fuser thermistor 2 (Center)	- (FK-8570)	- (302YL9301_)
38 Fuser thermistor 3 (Edge)	- (FK-8570)	- (302YL9301_)
39 Fuser thermistor 4 (Press)	- (FK-8570)	- (302YL9301_)
40 Exit reversing sensor	PARTS SENSOR OPT. SP	302P79401_
41 Lower exit full sensor	PARTS SENSOR OPT. SP	302P79401_
42 Upper exit full sensor	PARTS SENSOR OPT. SP	302P79401_
43 JS sensor	PARTS SENSOR OPT. SP	302P79401_
44 Front cover switch	SW.PUSH	7SP01000004+H01
45 Original size timing sensor	PARTS SENSOR OPT. SP	302P79401_
46 PF setting switch	INTER LOCK SWITCH	2FB2716_
47 Paper feed sensor 2	SENSOR OPT.	7NXPS122GD4AH01
48 Power switch	PWB SWITCH ASSY	302NG0110_
49 Conveying open/close switch	SW.PUSH	7SP01000004+H01
50 Right cover switch	INTER LOCK SWITCH	2FB2716_
51 Temperature/humidity sensor	PARTS PWB ASSY THERMISTOR SP	302M29413_
52 MP position switch	SW.PUSH	7SP01000004+H01
53 PF cassette switch 1	SW.PUSH	7SP01000004+H01
54 PF cassette switch 2	SW.PUSH	7SP01000004+H01
55 Toner motor sensor K	- (PARTS TONER HOPPER MONO UNIT SP)	- (302FX9407_)
56 Motion sensor	PARTS HUMAN DETECT ASSY SP	302V89407_

(5)Motors

(5-1)Locations

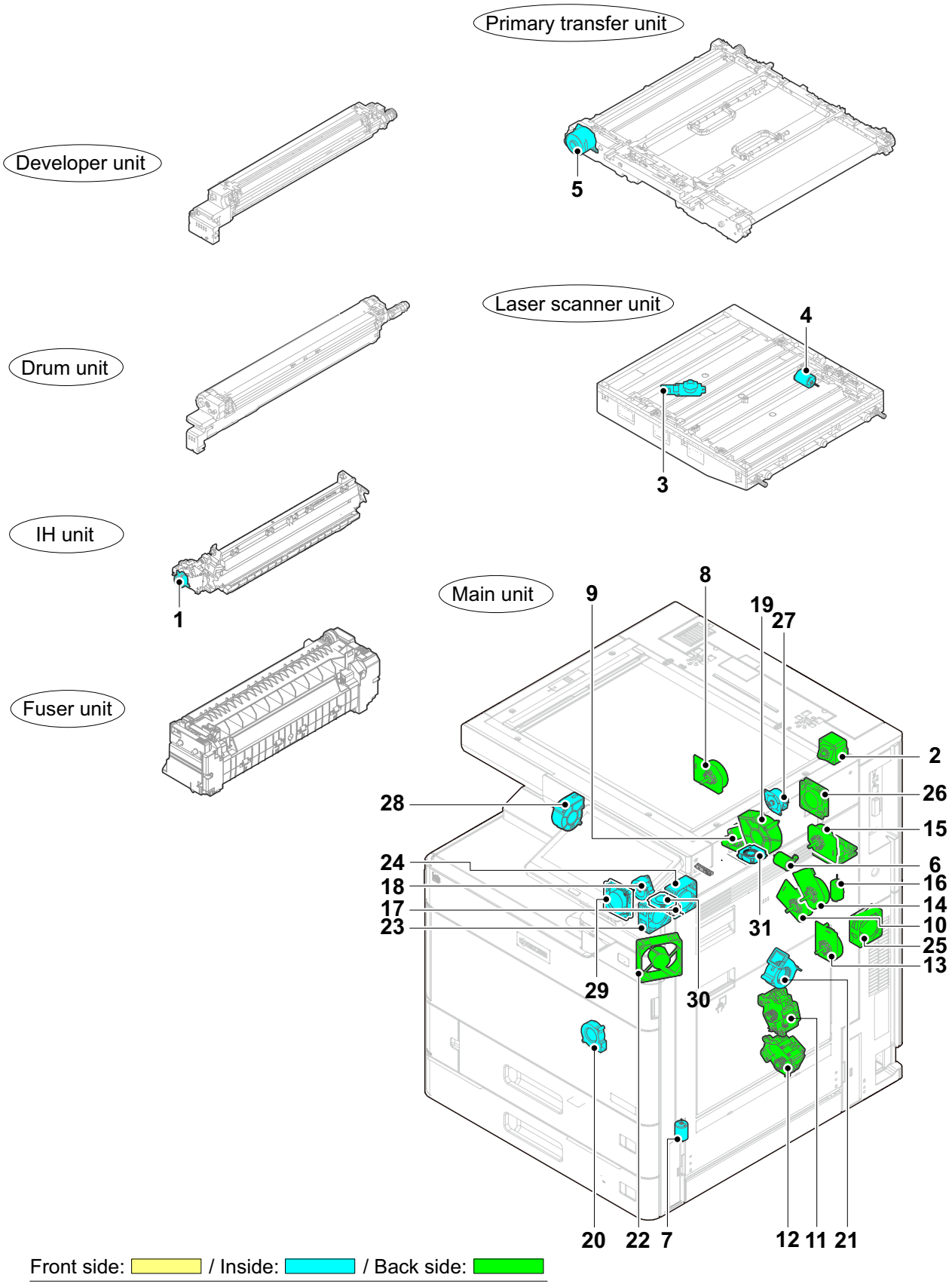

1	IH core motor *1	Driving the IH core.
2	Scanner motor	Driving the optical section.
3	Polygon motor	Driving polygon mirror.
4	LSU cleaning motor	Driving the LSU glass cleaning mechanism.
5	Belt cleaning motor	Driving the primary transfer belt cleaning roller.
6	Belt release sensor	Drive transfer belt release
7	MP lift motor	Operates the MP plate.
8	Container motor	Driving container
9	Toner motor K	Supplying the toner to developer unit.(Black)
10	Drum motor K	Driving the drum unit. (Black)
11	Lift motor 1	Operating the bottom plate for the cassette 1.
12	Lift motor 2	Operating the bottom plate for the cassette 2.
13	Paper feed motor	Driving the paper feed.
14	Developer K/Transfer belt motor	Driving the developer unit K and the transfer belt.
15	Fuser motor	Driving the fuser section.
16	Fuser pressure release	Drive fuser pressure release
17	Waste toner motor	Driving the waste toner mechanism.
18	Exit reversing motor	Driving the exit section.
19	IH PWB fan motor	Cooling the IH PWB.
20	Developer fan motor K	Cooling the developer.
21	Fuser edge fan motor	Cooling the fuser belt edge.
22	Power supply fan motor	Cooling the Power supply PWB and high-voltage PWB.
23	Front exit/IH fan motor	Exit paper/IH cooling.
24	Middle exit/IH fan motor	Exit paper/IH cooling.
25	Container fan motor	Cooling container/toner hopper.
26	Exit fan motor	Cooling the exit section.
27	Rear exit motor	Driving the exit section.
28	Left container fan motor	Cooling container
29	Exit/Fuser fan motor *1	Cooling exit section.
30	Front exit fan motor *1	Exit paper/IH cooling.
31	Rear exit fan motor *1	Exit paper/IH cooling.

*1: 70 ppm model only

(5-2)Part name table (motor)

Name used in service manual	Name used in parts list	Part. No.
1 IH core motor *1	- (FK-8610 IH)	- (302XC9314_)
2 Scanner motor	PARTS MOTOR ISU SP	302N29401_
3 Polygon motor	- (LK-6510)	- (302XF9303_)
4 LSU cleaning motor	- (LK-6510)	- (302XF9303_)
5 Belt cleaning motor	(PARTS MOTOR BL INNER W10 SP) (TR-6510)	(302ND9450_) (302XF9302_)
6 Belt release sensor	- (DR-6520)	- (302XF9301_)
7 MP lift motor	PARTS DC MOTOR ASSY A SP	302ND9404_
8 Container motor	PARTS MOTOR-BL W20 SET SP	302ND9451_
9 Toner motor K	- (PARTS TONER HOPPER H UNIT SP)	- (302XC9420_)
10 Drum motor K	PARTS MOTOR-BL W20 DRUM Z11 ASSY SP (DR-6520)	302ND9453_ (302XF9301_)
11 Lift motor 1	MOTOR LIFT ASSY	302ND9448_
12 Lift motor 2	MOTOR LIFT ASSY	302ND9448_
13 Paper feed motor	PARTS MOTOR-BL W30 ASSY SP	302ND9477_
14 Developer K/Transfer belt motor	PARTS MOTOR-BL W30 DRUM ASSY SP (DR-6520)	302ND9455_ (302XF9301_)
15 Fuser motor	PARTS MOTOR-BL W30 SET SP (PARTS FUSER DRIVE H ASSY SP)	302ND9491_ (302XC9424_)
16 Fuser pressure release	PARTS DC MOTOR ASSY B SP	302ND9405_
17 Waste toner motor	PARTS DC MOTOR ASSY B SP (PARTS WTB UNIT SP)	302ND9487_ (302XC9421_)
18 Exit reversing motor	PARTS MOTOR SWITCHBACK SP	302ND9449_
19 IH PWB fan motor	PARTS FAN COOLING DLP 70 SP	302K99435_
20 Developer fan motor K	FAN IMAGE	302FZ4401_
21 Fuser edge fan motor	PARTS FAN COOLING LSU 60 ASSY SP	302ND9458_
22 Power source fan motor	PARTS FAN MOTOR SP	302K09430_
23 Front exit/IH fan motor	PARTS FAN CENTER 60 25 SP	302ND9459_
24 Middle exit / IH fan motor	PARTS FAN CENTER 60 25 SP	302ND9459_
25 Container fan motor	FAN LSU 60-25	302GR4408_
26 Exit fan motor	PARTS FAN CENTER 60 15 SP	302ND9460_
27 Rear exit motor	PARTS MOTOR SWITCHBACK SP	302ND9449_

Name used in service manual	Name used in parts list	Part. No.
28 Left container fan motor	PARTS FAN COOLING LSU 60 SP	302LC9438_
29 Exit/Fuser fan motor *1	PARTS FAN CENTER 60 25 SP	302ND9459_
30 Front exit fan motor *1	PARTS FAN CENTER 60 25 SP	302ND9459_
31 Rear exit fan motor *1	PARTS FAN CENTER 60 25 SP	302ND9459_

*1: 70 ppm model only

(6)Others

(6-1)Locations

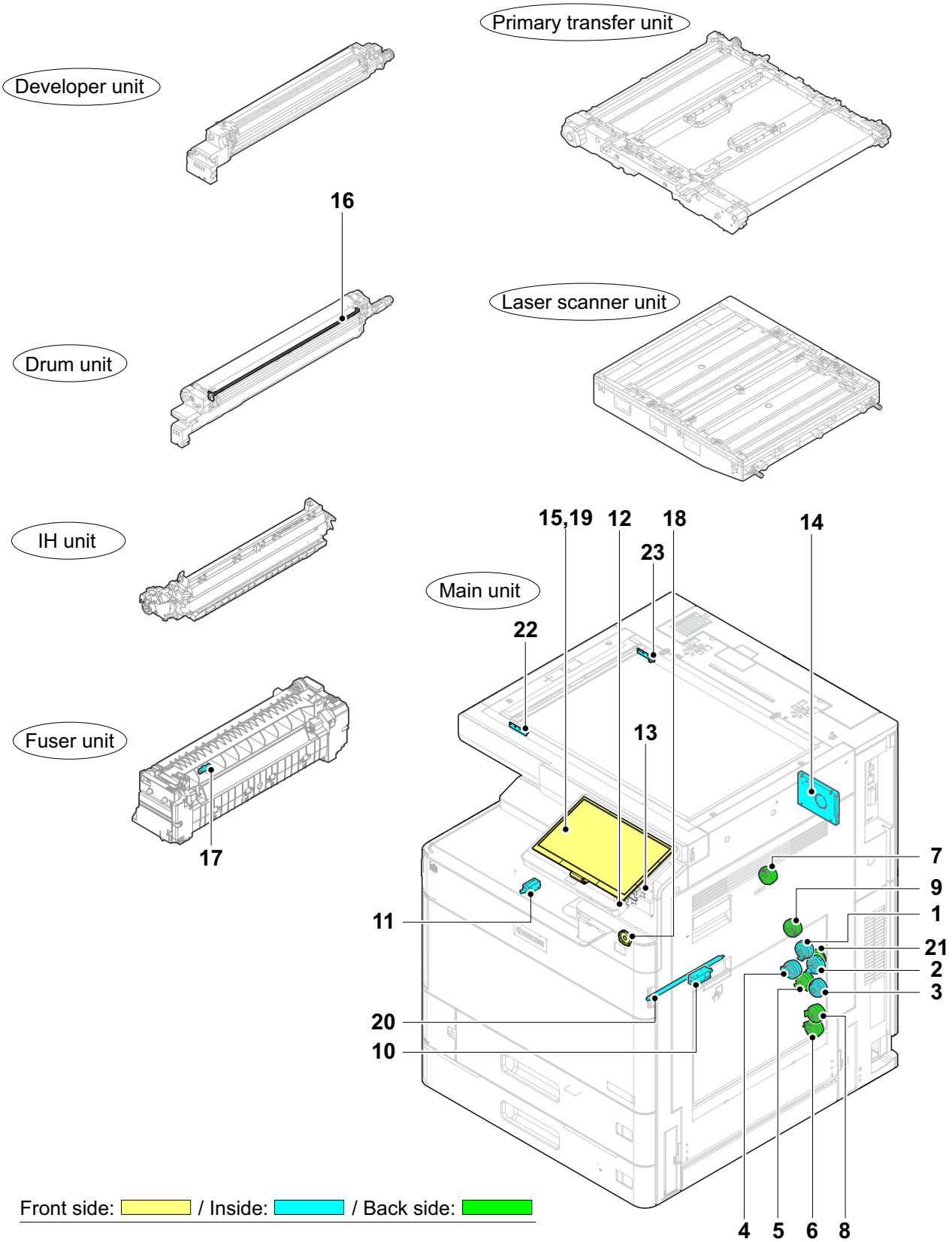

1	Duplex clutch 1	Controlling the duplex drive.
2	Duplex clutch 2	Controlling the duplex drive.
3	MP clutch	Controlling the primary paper feeding from the MP tray.

4	Registration clutch	Controlling the secondary paper feeding from the cassette.
5	Paper feed clutch 1	Controlling the primary paper feeding from the cassette 1.
6	Paper feed clutch 2	Controlling the primary paper feeding from the cassette 2.
7	Developer clutch	Controlling drive developer unit.(Black)
8	Vertical conveying clutch	Controlling the MP tray conveying drive.
9	Middle clutch	Controlling the conveying section drive.
10	Cleaning solenoid	ID sensor front
11	Container solenoid K	Releasing the container lock (Black).
12	Lower exit solenoid	Drive guide flap
13	Upper exit solenoid	Drive guide flap
14	HDD	Hard disk (HDD)
15	LCD	Displaying the operation screen.
16	Eraser K	Removing the electric charge on the drum (Black).
17	Fuser thermostat	Prevention of IH belt over heating.
18	Speaker	Generating the panel touch sound and error sound.
19	Touch panel	Converting the operation position data.
20	Drum heater K	Prevention of the drum surface condensation.
21	Line speed switching clutch	Switching paper conveying speed
22	Front LED	Original lighting
23	Rear LED	Original lighting

(6-2)Part name table

Name used in service manual	Name used in parts list	Part. No.
1 Duplex clutch 1	PARTS CLUTCH 35 Z35R SPRING SP	302ND9468_
2 Duplex clutch 2	PARTS CLUTCH 35 Z35R SPRING SP	302ND9468_
3 MP clutch	PARTS CLUTCH 35 Z35R SPRING SP	302ND9468_
4 Registration clutch	CLUTCH 35 Z35	302RH4401_
5 Paper feed clutch 1	PARTS CLUTCH 35 Z35R SP	302RH9409_
6 Paper feed clutch 2	PARTS CLUTCH 35 Z35R SP	302RH9409_
7 Developer clutch	- (DR-6520)	- (302XF9301_)
8 Vertical conveying clutch	PARTS CLUTCH 35 Z35R SP	302RH9409_
9 Middle clutch	CLUTCH 35 Z35	302RH4401_
10 Cleaning solenoid	PARTS ID SENSOR ASSY SP	302ND9414_
11 Container solenoid K	SOLENOID JS	303NM4401_
12 Lower exit solenoid	PARTS SOLENOID FEED SHIFT	302K99438_
13 Upper exit solenoid	PARTS SOLENOID FEED SHIFT	302K99438_
14 HDD	PARTS STORAGE DEVICE SP	302NH9319_
15 LCD	PARTS LCD OPERATION SP (PARTS OPERATION UNIT H SP)	302V894090 (302V89412_)
16 Eraser K	- (DK-8560)	- (302XC9305_)
17 Fuser thermostat	- (FK-8570)	- (302YL9301_)
18 Speaker	SPEAKER	302RH4507_
19 Touch panel	PARTS TABLET OPERATION SP (PARTS OPERATION UNIT H SP)	302V89408_ (302V89412_)
20 Drum heater K	PARTS PWB DRUM HEATER ASSY SP	302ND9433_
21 Line speed switching clutch	PARTS CLUTCH 35 Z35R SP	302RH9409_
22 Front LED	MOUNT LED ASSY SP	302XC8001_
23 Rear LED	MOUNT LED ASSY SP	302XC8001_

3 - 4 Electric parts (Optional unit)

(1)Document processor (DP-7150)

(1-1)Locations

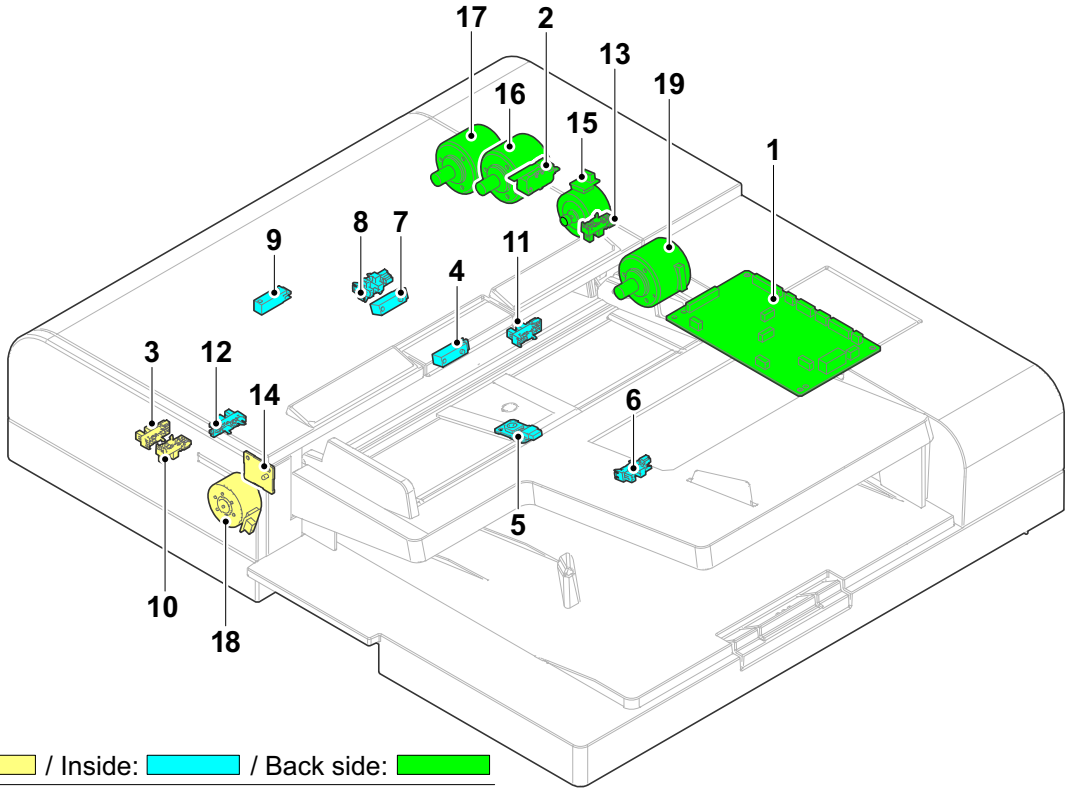

Front side: ▭ / Inside: ▭ / Back side: ▭

1	DP PWB	Relay board for the engine PWB and the DP electric parts.
2	DP top cover switch	Shutting off the 24V power supply when the top cover open.
3	DP open/close sensor	Detecting the opening and closing of the document processor.
4	DP original sensor	Detecting the original in the document processor.
5	DP original width sensor	Detecting the original width in the document processor.
6	DP original length sensor	Detecting the original length in the document processor.
7	DP paper feed sensor	Detects the primary feed timing of the document processor.
8	DP registration sensor	Detects the conveying timing of the document processor.
9	DP timing sensor	Detecting scan timing of the original in the document processor.
10	DP branch sensor	Detecting the position of the flap in the document processor.
11	DP exit sensor	Detecting exit paper of the document processor.
12	DP lift upper limit sensor	Detecting the upper limit of bottom plate in the document processor.
13	DP lift lower limit sensor	Detecting the lower limit of bottom plate in the document processor.
14	DPLED PWB	Indicate original set or original jam of document processor.
15	DP lift motor	Driving the document processor original bottom plate.
16	DP paper feed motor	Driving the original feed section in the document processor.
17	DP conveying motor	Driving the original conveying section in the document processor

18 DP flap motor — Driving branch section in the document processor.

19 DP reversing motor — Driving the original switchback section in the document processor.

(1-2)Part name table

Name used in service manual	Name used in parts list	Part. No.
1 DP PWB	PARTS PWB DRIVER ASSY SP	303V39401_
2 Right cover switch	INTER LOCK SWITCH	2FB2716_
3 DP open/close sensor	PARTS SENSOR OPT. SP	302P79401_
4 DP original sensor	PARTS SENSOR OPT. SP	303NW94060
5 DP original width sensor	PARTS PWB PAPER SIZE SENSOR ASSY SP	303R39405_
6 DP original length sensor	PARTS SENSOR OPT. SP	302P79401_
7 DP paper feed sensor	PARTS SENSOR OPT. SP	303NW94060
8 DP registration sensor	PARTS SENSOR OPT. SP	302P79401_
9 DP timing sensor	PARTS SENSOR OPT. SP	303NW9404_
10 DP branch sensor	PARTS SENSOR OPT. SP	302P79401_
11 DP exit sensor	PARTS SENSOR OPT. SP	302P79401_
12 DP lift upper limit sensor	PARTS SENSOR OPT. SP	302P79401_
13 DP lift lower limit sensor	PARTS SENSOR OPT. SP	302P79401_
14 DP LED PWB	PARTS PWB LED ASSY SP	302TJ9410_
15 DP lift motor	PARTS MOTOR ROTARY GUIDE	302H79431_
16 DP paper feed motor	PARTS MOTOR-BL INNER W10 SP	303R79408_
17 DP conveying motor	PARTS MOTOR-BL INNER W10 SP	303R79408_
18 DP flap motor	PARTS MOTOR ROTARY GUIDE	302H79431_
19 DP reversing motor	PARTS MOTOR-BL INNER W10 SP	303R79408_

(2)Document processor (DP-7160)

(2-1)Locations

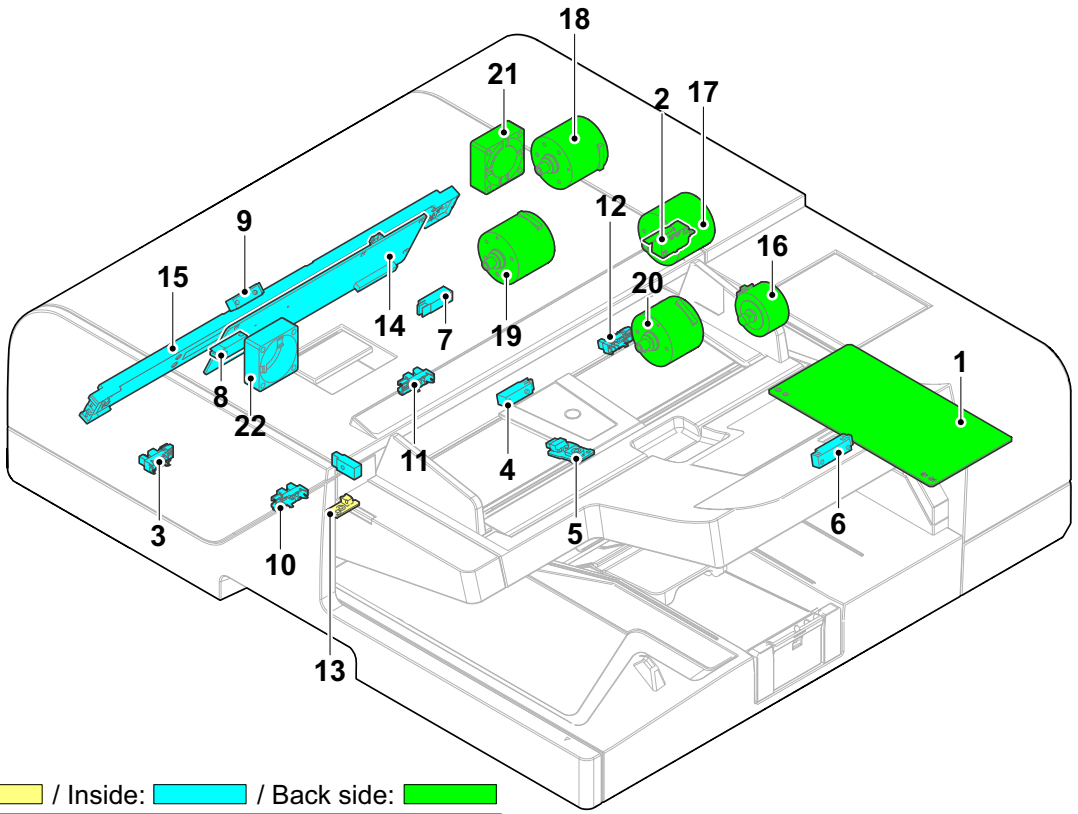

Front side: ▭ / Inside: ▭ / Back side: ▭

1	DP PWB	Relay board for the engine PWB and the DP electric parts.
2	DP top cover switch	Shutting off the 24V power supply when the top cover open.
3	DP open/close sensor	Detecting the opening and closing of the document processor.
4	DP original sensor	Detecting the original in the document processor.
5	DP original width sensor	Detecting the original width in the document processor.
6	DP original length sensor	Detecting the original length in the document processor.
7	DP paper feed sensor	Detects the primary feed timing of the document processor.
8	DP timing sensor	Detecting scan timing of the original in the document processor. (Front page)
9	DP backside timing sensor	Detecting scan timing of the original in the document processor. (Back page)
10	DP exit sensor	Detecting exit paper of the document processor.
11	DP lift upper limit sensor	Detecting the upper limit of bottom plate in the document processor.
12	DP lift lower limit sensor	Detecting the lower limit of bottom plate in the document processor.
13	DP LED PWB	Indicate original set or original jam of document processor.
14	DP SHD PWB	Processing the scanned image data in the document processor.
15	DP CIS	Scanning the backside of original in the document processor.
16	DP lift motor	Driving the document processor original bottom plate.
17	DP paper feed motor	Driving the original feed section in the document processor.
18	DP registration motor	Driving the original registration section in the document processor.

19 DP conveying motor	Driving the original conveying section in the document processor
20 DP exit motor	Driving the original exit section in the document processor.
21 DP drive fan	Cooling the document processor drive section.
22 DP CIS fan	Cooling the CIS PWB in the document processor. Document processor

(2-2)Part name table

Name used in service manual	Name used in parts list	Part. No.
1 DP PWB	PARTS PWB DRIVER ASSY SP	303TC9409_
2 DP top cover switch	INTER LOCK SWITCH	2FB2716_
3 DP open/close sensor	PARTS SENSOR OPT SP	302P79401_
4 DP original sensor	PARTS SENSOR OPT. SP	303NW9406_
5 DP original width sensor	PARTS PWB SIZE DETECTION ASSY SP	303R39405_
6 DP original length sensor	PARTS SENSOR OPT. SP	303NW9405_
7 DP paper feed sensor	PARTS SENSOR OPT. SP	303NW9404_
8 DP timing sensor	PARTS SENSOR OPT. SP	303NW9404_
9 DP backside timing sensor	PARTS SENSOR OPT. SP	303NW9404_
10 DP exit sensor	PARTS SENSOR OPT SP	302P79401_
11 DP lift upper limit sensor	PARTS SENSOR OPT SP	302P79401_
12 DP lift lower limit sensor	PARTS SENSOR OPT SP	302P79401_
13 DP LED PWB	PARTS PWB LED ASSY SP	303TC9403_
14 DP SHD PWB	PARTS PWB SHD ASSY SP	303TC9401_
15 DP CIS	PARTS CIS HIGH SP	303TC9408_
16 DP lift motor	PARTS MOTOR ROTARY GUIDE	302H79431_
17 DP paper feed motor	PARTS MOTOR BL INNER W20 SP	303TC9406_
18 DP registration motor	PARTS MOTOR BL INNER W20 SP	303TC9406_
19 DP conveying motor	PARTS MOTOR BL INNER W20 SP	303TC9406_
20 DP exit motor	PARTS MOTOR BL INNER W10 SP	303TC9407_
21 DP drive fan	FAN COOLING 40-15	302H04412_
22 DP CIS fan	FAN COOLING 40-15	302H04412_

(3)Document processor (DP-7170)

(3-1)Locations

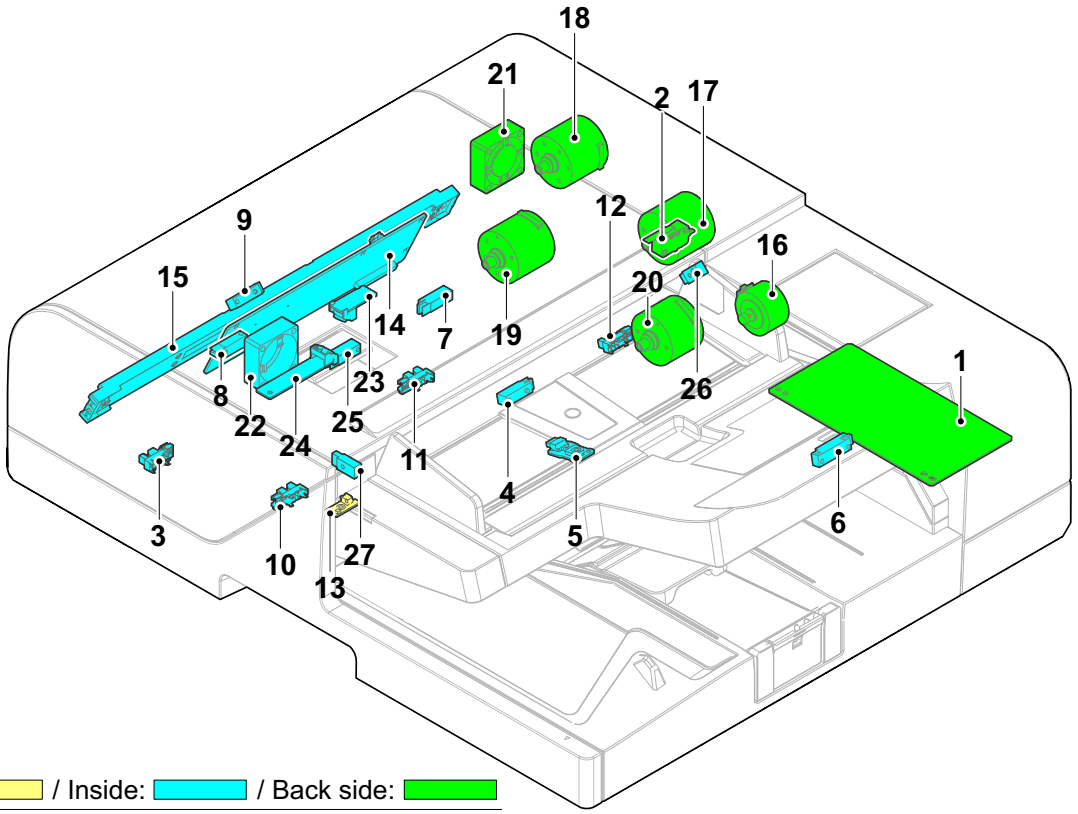

Front side: / Inside: / Back side:

1	DP PWB	Relay board for the engine PWB and the DP electric parts.
2	DP top cover switch	Shutting off the 24V power supply when the top cover open.
3	DP open/close sensor	Detecting the opening and closing of the document processor.
4	DP original sensor	Detecting the original in the document processor.
5	DP original width sensor	Detecting the original width in the document processor.
6	DP original length sensor	Detecting the original length in the document processor.
7	DP paper feed sensor	Detects the primary feed timing of the document processor.
8	DP timing sensor	Detecting scan timing of the original in the document processor. (Front page)
9	DP backside timing sensor	Detecting scan timing of the original in the document processor. (Back page)
10	DP exit sensor	Detecting the document processor exit paper.
11	DP lift upper limit sensor	Detecting the upper limit of bottom plate in the document processor.
12	DP lift lower limit sensor	Detecting the lower limit of bottom plate in the document processor.
13	DPL ED PWB	Indicate original set or original jam of document processor.
14	DP SHD PWB	Processing the scanned image data in the document processor.
15	DP CIS	Scanning the backside of original in the document processor.
16	DP lift motor	Driving the document processor original bottom plate.
17	DP paper feed motor	Driving the original feed section in the document processor.
18	DP registration motor	Driving the original registration section in the document processor.

19 DP conveying motor	Driving the original conveying section in the document processor
20 DP exit motor	Driving the original exit section in the document processor.
21 DP drive fan	Cooling the document processor drive section.
22 DP CIS fan	Cooling the CIS PWB in the document processor.
23 DP multi feed sensor 1	Detect multi deed (Emitter).
24 DP multi feed sensor 2	Detect multi feed (Receptor)
25 DP slant sensor	Detect the original slant condition together with FEED sensor
26 DP flip-up sensor emission	Detect the original flip-up condition (Light emission side)
27 DP flip-up sensor reception	Detect the original flip-up condition (Light receptor side)

(3-2)Part name table

Name used in service manual	Name used in parts list	Part. No.
1 DP PWB	PARTS PWB DRIVER ASSY SP	303TD9403_
2 DP top cover switch	INTER LOCK SWITCH	2FB2716_
3 DP open/close sensor	PARTS SENSOR OPT SP	302P79401_
4 DP original sensor	PARTS SENSOR OPT. SP	303NW9406_
5 DP original width sensor	PARTS PWB SIZE DETECTION ASSY SP	303R39405_
6 DP original length sensor	PARTS SENSOR OPT. SP	303NW9405_
7 DP paper feed sensor	PARTS SENSOR OPT. SP	303NW9404_
8 DP timing sensor	PARTS SENSOR OPT. SP	303NW9404_
9 DP backside timing sensor	PARTS SENSOR OPT. SP	303NW9404_
10 DP exit sensor	PARTS SENSOR OPT SP	302P79401_
11 DP lift upper limit sensor	PARTS SENSOR OPT SP	302P79401_
12 DP lift lower limit sensor	PARTS SENSOR OPT SP	302P79401_
13 DP LED PWB	PARTS PWB LED ASSY SP	303TC9403_
14 DP SHD PWB	PARTS PWB SHD ASSY SP	303TC9401_
15 DP CIS	PARTS CIS HIGH SP	303TC9408_
16 DP lift motor	PARTS MOTOR ROTARY GUIDE	302H79431_
17 DP paper feed motor	PARTS MOTOR BL INNER W20 SP	303TC9406_
18 DP registration motor	PARTS MOTOR BL INNER W20 SP	303TC9406_
19 DP conveying motor	PARTS MOTOR BL INNER W20 SP	303TC9406_
20 DP exit motor	PARTS MOTOR BL INNER W10 SP	303TC9407_
21 DP drive fan	FAN COOLING 40-15	302H04412_
22 DP CIS fan	FAN COOLING 40-15	302H04412_
23 DF multi feed sensor 1	PARTS PWB TX ASSY SP	303TD9402_
24 DF multi feed sensor 2	PARTS PWB RX ASSY SP	303TD9401_
25 DP slant sensor	PARTS SENSOR OPT. SP	303NW9404_

Name used in service manual	Name used in parts list	Part. No.
26 DP flip-up sensor emission	SENSOR A,SEPARATION	303H32746_
27 DP flip-up sensor reception	PARTS SENSOR OPT SP	303NB9414_

(4)Paper Feeder (PF-7140)

(4-1)Locations

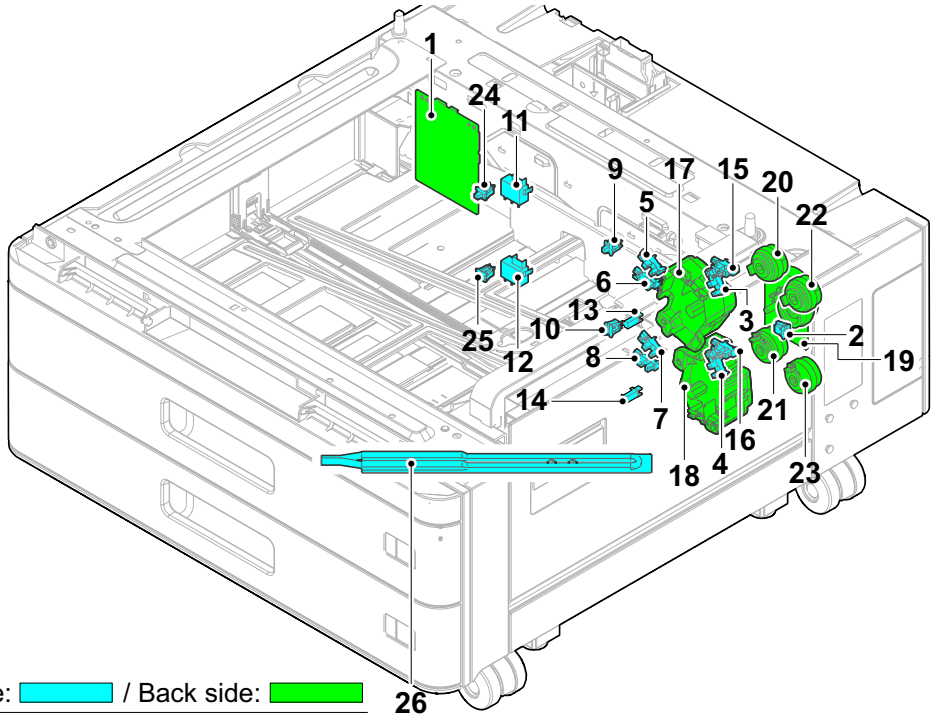

Front side: ▭ / Inside: ▭ / Back side: ▭

1	PF PWB	Controlling the electric parts in the PF.
2	PF right cover switch	Detecting the right cover open/close.
3	PF paper sensor 1	Detecting paper in the upper cassette.
4	PF paper sensor 2	Detecting paper in the lower cassette.
5	Upper PF paper gauge sensor 1	Detecting the level of the remaining paper inside the upper cassette.
6	Lower PF paper gauge sensor 1	Detecting the level of the remaining paper inside the upper cassette.
7	Upper PF paper gauge sensor 2	Detecting the level of the remaining paper inside the lower cassette.
8	Lower PF paper gauge sensor 2	Detecting the level of the remaining paper inside the lower cassette.
9	PF paper width switch 1	Detecting the paper width in the upper cassette.
10	PF paper width switch 2	Detecting the paper width in the lower cassette.
11	PF paper length switch 1	Detecting the paper length and upper cassette.
12	PF paper length switch 2	Detecting the paper length and lower cassette.
13	PF conveying sensor 1	Detecting paper jam at the upper paper conveying section.
14	PF conveying sensor 2	Detecting paper jam at the lower paper conveying section.
15	PF lift upper limit sensor 1	Detecting the upper limit of the bottom plate in the upper cassette.
16	PF lift upper limit sensor 2	Detecting the upper limit of the bottom plate in the lower cassette.
17	PF lift motor 1	Driving the bottom plate in the upper cassette.
18	PF lift motor 2	Driving the bottom plate in the lower cassette.
19	PF paper feed motor	Driving the paper feeding system.
20	PF paper feed clutch 1	Controlling the primary paper feeding from the upper cassette.

21 PF paper feed clutch 2	Controlling the primary paper feeding from the lower cassette.
22 PF conveying clutch 1	Controlling the paper conveying section from the upper cassette.
23 PF conveying clutch 2	Controlling the paper conveying section from the lower cassette.
24 PF cassette switch 1	Detecting the upper cassette.
25 PF cassette switch 2	Detecting the lower cassette.
26 PF cassette heater	Dehumidifying paper.

(4-2)Part name table

Name used in service manual	Name used in parts list	Part. No.
1 PF PWB	PARTS PWB PF MAIN ASSY SP	3034V9403_
2 PF right cover switch	SW. PUSH	7SP01000007+H01
3 PF paper sensor 1	PARTS SENSOR OPT. SP	302P79401_
4 PF paper sensor 2	PARTS SENSOR OPT. SP	302P79401_
5 Upper PF paper gauge sensor 1	PARTS SENSOR OPT. SP	302P79401_
6 Lower PF paper gauge sensor 1	PARTS SENSOR OPT. SP	302P79401_
7 Upper PF paper gauge sensor 2	PARTS SENSOR OPT. SP	302P79401_
8 Lower PF paper gauge sensor 2	PARTS SENSOR OPT. SP	302P79401_
9 PF paper width switch 1	SW. PUSH	7SP01000007+H01
10 PF paper width switch 2	SW. PUSH	7SP01000007+H01
11 PF paper length switch 1	SW. PUSH	7SP03090001+H01
12 PF paper length switch 2	SW. PUSH	7SP03090001+H01
13 PF conveying sensor 1	PARTS SENSOR OPT. SP	303V49401_
14 PF conveying sensor 2	PARTS SENSOR OPT. SP	303V49401_
15 PF lift upper limit sensor 1	PARTS SENSOR OPT. SP	302P79401_
16 PF lift upper limit sensor 2	PARTS SENSOR OPT. SP	302P79401_
17 PF lift motor 1	PARTS MOTOR LIFT ASSY SP	302ND9448_
18 PF lift motor 2	PARTS MOTOR LIFT ASSY SP	302ND9448_
19 PF paper feed motor	PARTS MOTOR-BL W10 SP	302LC9429_
20 PF paper feed clutch 1	PARTS CLUTCH 35 Z35R SP	302RH9409_
21 PF paper feed clutch 2	PARTS CLUTCH 35 Z35R SP	302RH9409_
22 PF conveying clutch 1	PARTS CLUTCH 35 Z35R SP	302RH9409_
23 PF conveying clutch 2	PARTS CLUTCH 35 Z35R SP	302RH9409_
24 PF cassette switch 1	SW. PUSH	7SP01000007+H01
25 PF cassette switch 2	SW. PUSH	7SP01000007+H01
26 PF cassette heater	PARTS HEATER 120 ASSY PARTS HEATER 240 ASSY	303RB9405* *1 303RB9406* *2

*1: 120V model, *2: 220v-240V model

(5)High capacity paper feeder (PF-7150)

(5-1)Locations

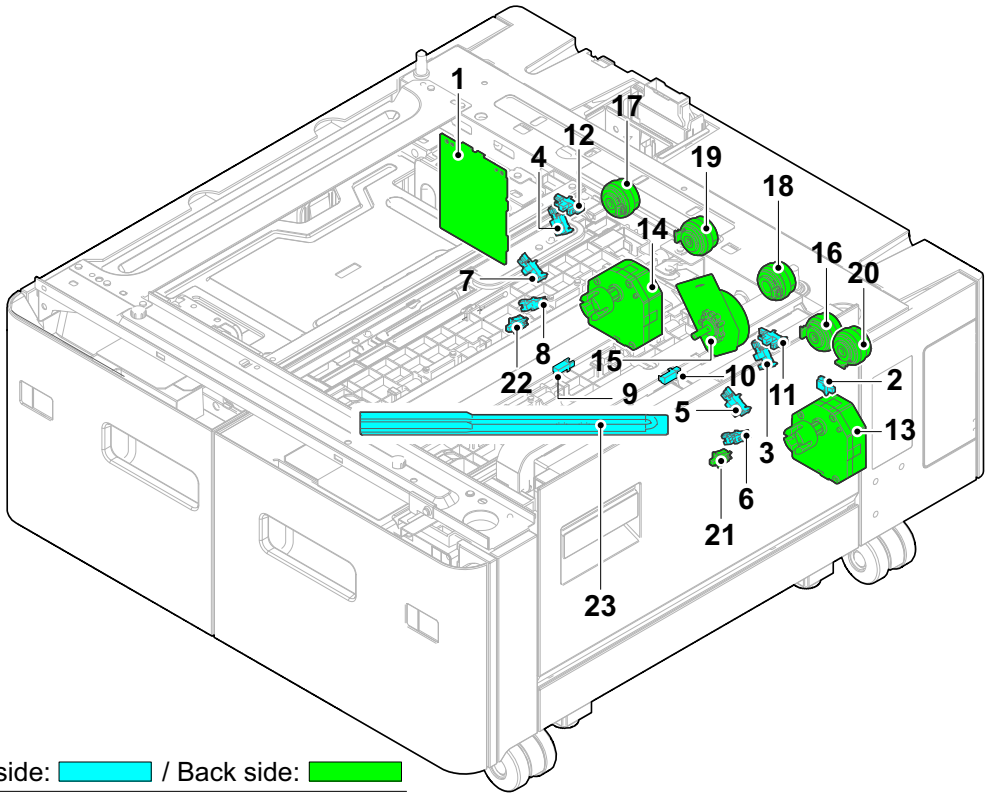

Front side: / Inside: / Back side:

1	PF PWB	Controlling the electric parts in the PF.
2	PF right cover switch	Detecting the right cover open/close.
3	PF paper sensor 1	Detecting paper in the right cassette.
4	PF paper sensor 2	Detecting paper in the right cassette.
5	Upper PF paper gauge sensor 1	Detecting the level of the remaining paper in the right cassette.
6	Lower PF paper gauge sensor 1	Detecting the level of the remaining paper in the right cassette.
7	Upper PF paper gauge sensor 2	Detecting the level of the remaining paper in the left cassette.
8	Lower PF paper gauge sensor 2	Detecting the level of the remaining paper in the left cassette.
9	PF horizontal conveying sensor	Detecting paper jam at the horizontal paper conveying section.
10	PF vertical conveying sensor	Detecting paper jam at the vertical paper conveying section.
11	PF lift upper limit sensor 1	Detecting the upper limit of the bottom plate in the right cassette.
12	PF lift upper limit sensor 2	Detecting the upper limit of the bottom plate in the left cassette.
13	PF lift motor 1	Driving the bottom plate in the right cassette.
14	PF lift motor 2	Driving the bottom plate in the left cassette.
15	PF paper feed motor	Driving the paper feeding section.
16	Right PF paper feed clutch 1	Controlling the primary paper feeding from the right cassette.
17	Left PF paper feed clutch 2	Controlling the primary paper feeding from the left cassette.
18	PF horizontal conveying clutch 1	Controlling the right of horizontal paper conveying.
19	PF horizontal conveying clutch 2	Controlling the left of horizontal paper conveying.

20 PF vertical conveying clutch	Controlling the vertical paper conveying.
21 PF cassette switch 1	Detecting the right cassette.
22 PF cassette switch 2	Detecting the left cassette.
23 PF cassette heater	Dehumidifying paper.

(5-2)Part name table

Name used in service manual	Name used in parts list	Part. No.
1 PF PWB	PARTS PWB PF MAIN ASSY SP	303V59402_
2 PF right cover switch	SW.PUSH	7SP01000007+H01
3 PF paper sensor 1	PARTS SENSOR OPT. SP	302P79401_
4 PF paper sensor 2	PARTS SENSOR OPT. SP	302P79401_
5 Upper PF paper gauge sensor 1	PARTS SENSOR OPT. SP	303M89426_
6 Lower PF paper gauge sensor 1	PARTS SENSOR OPT SP	303M89426_
7 Upper PF paper gauge sensor 2	PARTS SENSOR OPT SP	303M89426_
8 Lower PF paper gauge sensor 2	PARTS SENSOR OPT SP	303M89426_
9 PF horizontal conveying sensor	PARTS SENSOR OPT. SP	303V49401_
10 PF vertical conveying sensor	PARTS SENSOR OPT. SP	303V49401_
11 PF lift upper limit sensor 1	PARTS SENSOR OPT. SP	302P79401_
12 PF lift upper limit sensor 2	PARTS SENSOR OPT. SP	302P79401_
13 PF lift motor 1	PARTS MOTOR LIFT DECK SP	303NF9409_
14 PF lift motor 2	PARTS MOTOR LIFT DECK SP	303NF9409_
15 PF paper feed motor	PARTS MOTOR-BL W10 SP	302LC9429_
16 Right PF paper feed clutch 1	PARTS CLUTCH 35 Z35R SP	302RH9409_
17 Left PF paper feed clutch 2	PARTS CLUTCH 35 Z35R SP	302RH9409_
18 PF horizontal conveying clutch 1	PARTS CLUTCH 35 Z35R SP	302RH9409_
19 PF horizontal conveying clutch 2	PARTS CLUTCH 35 Z35R SP	302RH9409_
20 PF vertical conveying clutch	PARTS CLUTCH 35 Z35R SP	302RH9409_
21 PF cassette switch 1	SW.PUSH	7SP01000007+H01
22 PF cassette switch 2	SW.PUSH	7SP01000007+H01
23 PF cassette heater	PARTS HEATER 120 ASSY PARTS HEATER 240 ASSY	303RB9405* *1 303RB9406* *2

*1: 120V model, *2: 220v-240V model

(6)Side Deck (PF-7120)

(6-1)Locations

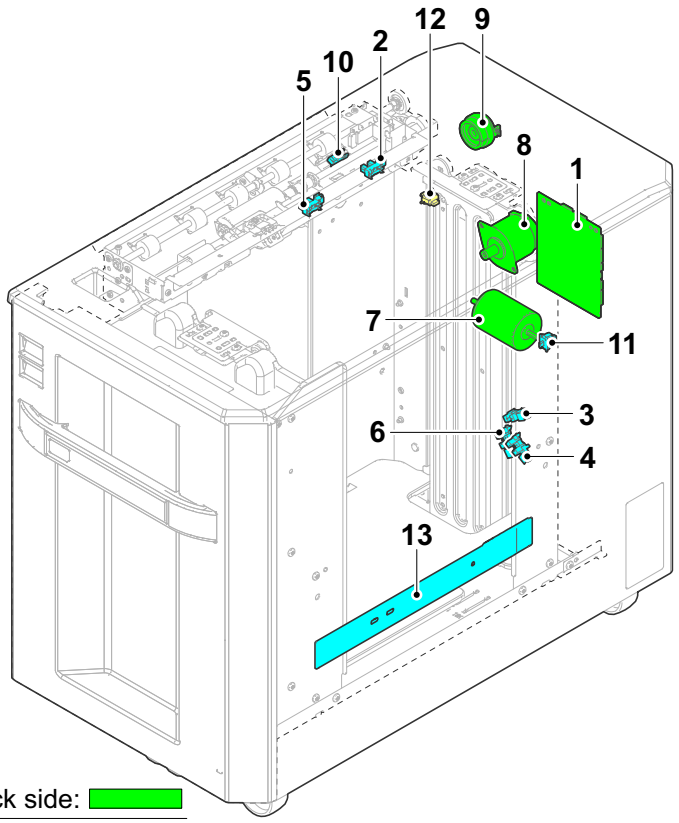

Front side: / Inside: / Back side:

1	PF PWB	Controlling the electric parts in the PF.
2	PF paper sensor	Detecting paper in the cassette.
3	Upper PF paper gauge sensor	Detecting the level of the remaining paper in the cassette.
4	Lower PF paper gauge sensor	Detecting the level of the remaining paper in the cassette.
5	PF lift upper limit sensor	Detecting the upper limit of the bottom plate in the cassette.
6	PF lift lower limit sensor	Detecting the lower limit of the bottom plate in the cassette.
7	PF lift motor	Driving the bottom plate in the left cassette.
8	PF conveying motor	Driving the paper conveying.
9	PF paper feed clutch	Controlling the primary paper feeding from the cassette.
10	PF paper feed sensor	Detecting jam at the feed section.
11	PF cassette switch	Detecting the cassette.
12	PF connection switch	Detect connection of PF connection and main unit.
13	PF cassette heater	Dehumidifying paper.

(6-2)Part name table

Name used in service manual	Name used in parts list	Part. No.
1 PF PWB	PARTS PWB SIDE DECK ASSY SP	303RL9402*
2 PF paper sensor	PARTS SENSOR OPT. SP	302K99458*
3 Upper PF paper gauge sensor 1	PARTS SENSOR OPT SP	303M89426*
4 Lower PF paper gauge sensor 1	PARTS SENSOR OPT SP	303M89426*
5 PF lift upper limit sensor 1	PARTS SENSOR OPT SP	303M89426*
6 PF lift upper limit sensor 2	PARTS SENSOR OPT SP	303M89426*
7 PF lift motor	MOTOR,MAIN TRAY	303H32751*
8 PF conveying motor	PARTS MOTOR-BL INNER W20 SP	303RL9403*
9 PF paper feed clutch	CLUTCH 50 Z35R	302KV4404*
10 PF paper feed sensor	PARTS SENSOR OPT. SP	302K99458*
11 PF cassette switch	SW. PUSH	7SP01000006+H01
12 PF connection switch	SW. PUSH	7SP01000007+H01
13 PF cassette heater	PARTS DEHUMIDIFINR 120 SET SP PARTS DEHUMIDIFINR 240 SET SP	303RL9405* *1 303RL9406* *2

*1: 120V model, *2: 220v-240V model

(7)Inner Shift tray (JS-7100)

(7-1)Locations

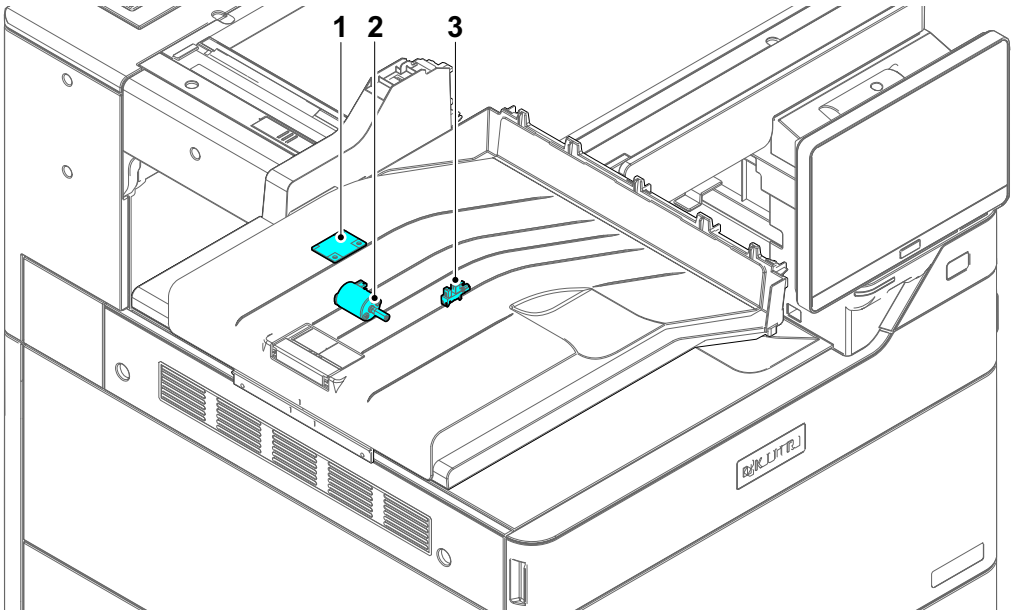

Front side: ▭ / Inside: ▭ / Back side: ▭

1	JS PWB	Controlling the electric parts in the JS
2	JS shift motor	Driving the JS tray shift
3	JS tray HP sensor	Detecting the JS tray HP

(7-2)Part name table

Name used in service manual	Name used in parts list	Part. No.
1 JS PWB	PARTS PWB INNER SHIFT TRAY SP	303TB9402_
2 JS shift motor	PARTS DC MOTOR ASSY SP	303TB9401_
3 JS tray HP sensor	PARTS SENSOR OPT. SP	302P79401_

(8)Inner Finisher (DF-7100)

(8-1)Locations

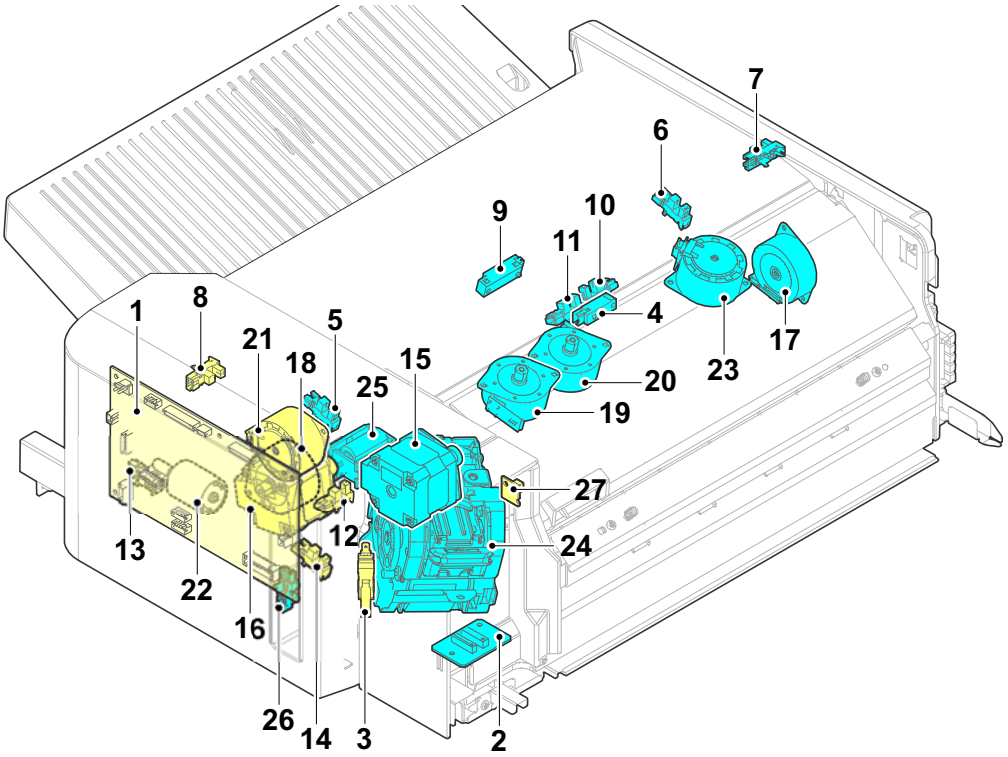

Front side: / Inside: / Back side:

1	DF PWB	Controlling the electric parts.
2	DF staple relay PWB	Relaying the staple unit control signals.
3	DF front cover switch	Shutoff 24V power supply when the front cover open, interlock switch.
4	DF entry sensor	Detecting paper at the entry section.
5	DF side registration sensor 1	Detecting home position of the DF front adjusting plate.
6	DF side registration sensor 2	Detecting home position of the DF rear adjusting plate.
7	DF adjusting sensor	Detecting home position of the paper guide.
8	DF bundle exit sensor	Detecting position of the bundle exit unit.
9	DF exit sensor	Detecting paper at the exit section.
10	DF paper press sensor 1	Detecting pressure for the bundle exit paper (Upper limit).
11	DF paper press sensor 2	Detecting pressure for the bundle exit paper (Lower limit).
12	DF paddle sensor	Detecting home position of the paddle.
13	DF tray sensor	Detecting the exit tray lower limit.
14	DF slide sensor	Detecting slide position of the staple unit.
15	DF entry motor	Driving the entry roller.
16	DF middle motor	Driving the middle roller.
17	DF paddle motor	Driving the paper guides.
18	DF exit release motor	Driving the bundle exit unit.
19	DF side registration motor 1	Driving the adjusting plate front.

20 DF side registration motor 2	Driving the adjusting plate rear.
21 DF exit motor	Driving the exit roller.
22 DF tray motor	Drive exit tray up and down.
23 DF slide motor	Slide the Staple unit.
24 DF staple unit	Paper stapler.
25 DF paper press solenoid	Switching the bundle paper pressure.
26 DF connection sensor	Detect connection with the main unit and DF (connection detection).
27 DF release LED	Lit when releasing the inner finisher.

(8-2)Part name table

Name used in service manual	Name used in parts list	Part. No.
1 DF PWB	PARTS PWB DF MAIN ASSY SP	303RD9402*
2 DF staple relay PWB	PARTS PWB STAPLER ASSY SP	303NB9402*
3 DF front cover switch	INTER LOCK SWITCH	2FB2716*
4 DF entry sensor	SENSOR OPT.	303NW9404*
5 DF side registration sensor 1	PARTS SENSOR OPT. SP	302P79401*
6 DF side registration sensor 2	PARTS SENSOR OPT. SP	302P79401*
7 DF adjusting sensor	PARTS SENSOR OPT. SP	302P79401*
8 DF bundle exit sensor	PARTS SENSOR OPT. SP	302P79401*
9 DF exit sensor	PARTS SENSOR OPT SP	303PX9403*
10 DF paper press sensor 1	PARTS SENSOR OPT. SP	302P79401*
11 DF paper press sensor 2	PARTS SENSOR OPT. SP	302P79401*
12 DF paddle sensor	PARTS SENSOR OPT. SP	302P79401*
13 DF tray sensor	PARTS SENSOR OPT. SP	302P79401*
14 DF slide sensor	PARTS SENSOR OPT. SP	302P79401*
15 DF entry motor	PARTS MOTOR DP SP	303NV9401*
16 DF middle motor	PARTS MOTOR DP SP	303NV9401*
17 DF paddle motor	PARTS MOTOR PM FEED SP	302K99430*
18 DF exit release motor	PARTS MOTOR-PM MOVING SP	303NB9404*
19 DF side registration motor 1	MOTOR REVERSE	302HN4410*
20 DF side registration motor 2	MOTOR REVERSE	302HN4410*
21 DF exit motor	PARTS MOTOR-PM MOVING SP	303NB9404*
22 DF tray motor	PARTS DC MOTOR ASSY SP	303PX9401*
23 DF slide motor	PARTS MOTOR-PM MOVING SP	303NB9404*
24 DF staple unit	STAPLER EH590	303JY4401*
25 DF paper press solenoid	PARTS SOLENOID FEED SHIFT SP	302K99438*

Name used in service manual	Name used in parts list	Part. No.
26 DF connection sensor	PARTS SENSOR OPT. SP	302P79401*
27 DF release LED	PARTS PWB LED ASSY SP	303RD9407*

(9)Punch unit (PH-7100/7120/7130)

(9-1)Locations

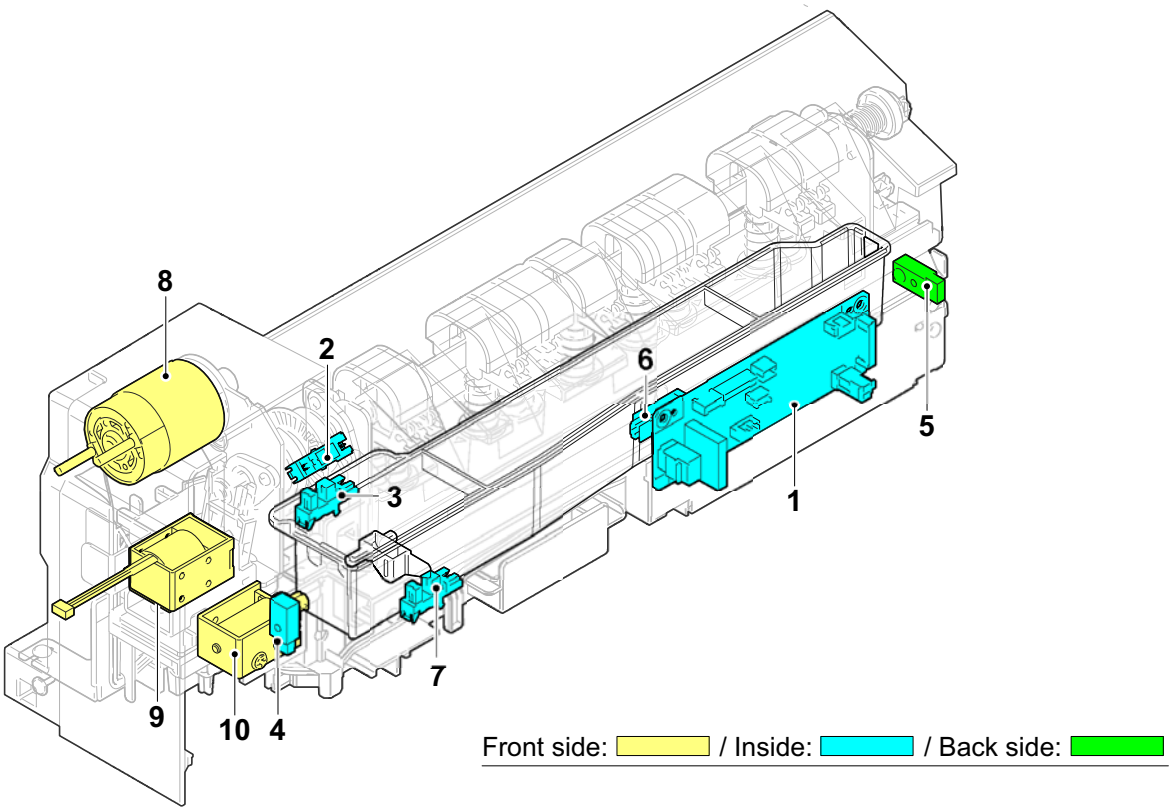

1	PH PWB	Controlling the electric parts of the punch unit.
2	PH home position sensor	Detecting home position of the PH.
3	PH pulse sensor	Rotation control for PF cam.
4	PH dust tank full sensor (Emit)	Detecting the punch dust tank full.
5	PH dust tank full sensor (Receipt)	Detecting the punch dust tank full.
6	PH entry sensor	Detecting paper at the entry section.
7	PH dust tank sensor	Detecting the punch dust tank.
8	PH motor	Driving the punch unit.
9	PH solenoid	Switching the punch holes.
10	PH tank solenoid	Move the punch dust tank.

(9-2)Part name table

Name used in service manual	Name used in parts list	Part. No.
1 PH PWB	PARTS PWB PUNCH ASSY SP	303RF9401*
2 PH home position sensor	PARTS SENSOR OPT. SP	302P79401*
3 PH pulse sensor	PARTS SENSOR OPT. SP	302P79401*
4 PH dust tank full sensor 1	SENSOR A,SEPARATION	303H32746*
5 PH dust tank full sensor 2	PARTS SENSOR OPT. SP	303NB9414*
6 PH entry sensor	PARTS SENSOR OPT. SP	303NW9406*

Name used in service manual	Name used in parts list	Part. No.
7 PH dust tank sensor	SENSOR A,SEPARATION	303H32746*
8 PH motor	PARTS MOTOR PUNCH SP	303RF9402*
9 PH solenoid	PARTS SOLENOID PRESSURE PULLEY SP	303LJ9414*
10 PH tank solenoid	PARTS SOLENOID FEED SHIFT SP	302K99438*

(10)Attachment Kit (AK-7110)

(10-1)Locations

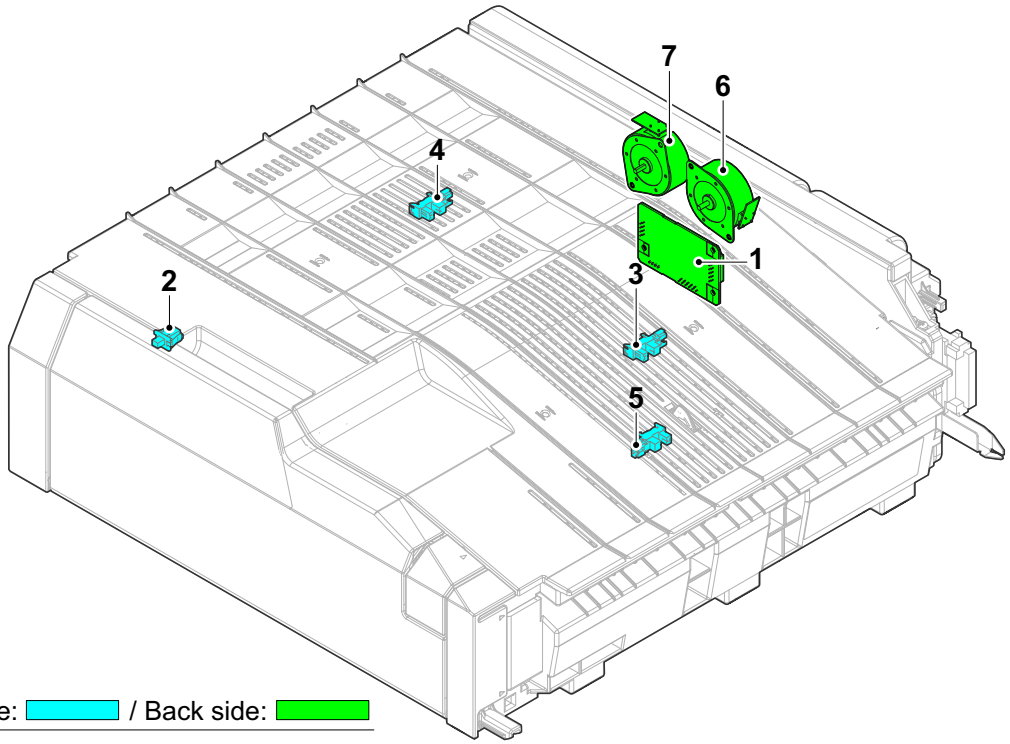

Front side: ▭ / Inside: ▭ / Back side: ▭

1	BR PWB	Controlling the electric parts in the BR.
2	BR cover switch	Detecting the BR cover open/close.
3	BR conveying sensor 1	Detecting paper in the bridge. (right side)
4	BR conveying sensor 2	Detecting paper in the bridge. (left side)
5	BR job separator sensor	Detecting exit paper to the job separator.
6	BR conveying motor 1	Controlling the paper conveying in the bridge.
7	BR conveying motor 2	Controlling the paper conveying in the bridge.

(10-2)Part name table

Name used in service manual	Name used in parts list	Part. No.
1 BR PWB	PARTS PWB BRIDGE ASSY SP	303RG94010
2 BR cover switch	SW.PUSH	7SP01000007+H01
3 BR conveying sensor 1	PARTS SENSOR OPT. SP	302P79401*
4 BR conveying sensor 2	PARTS SENSOR OPT. SP	302P79401*
5 BR job separator sensor	PARTS SENSOR OPT. SP	302P79401*
6 BR conveying motor 1	PARTS MOTOR SWITCHBACK SP	302ND9449*
7 BR conveying motor 2	PARTS MOTOR SWITCHBACK SP	302ND9449*

(11)4000-sheet Finisher (DF-7140)

(11-1)Locations

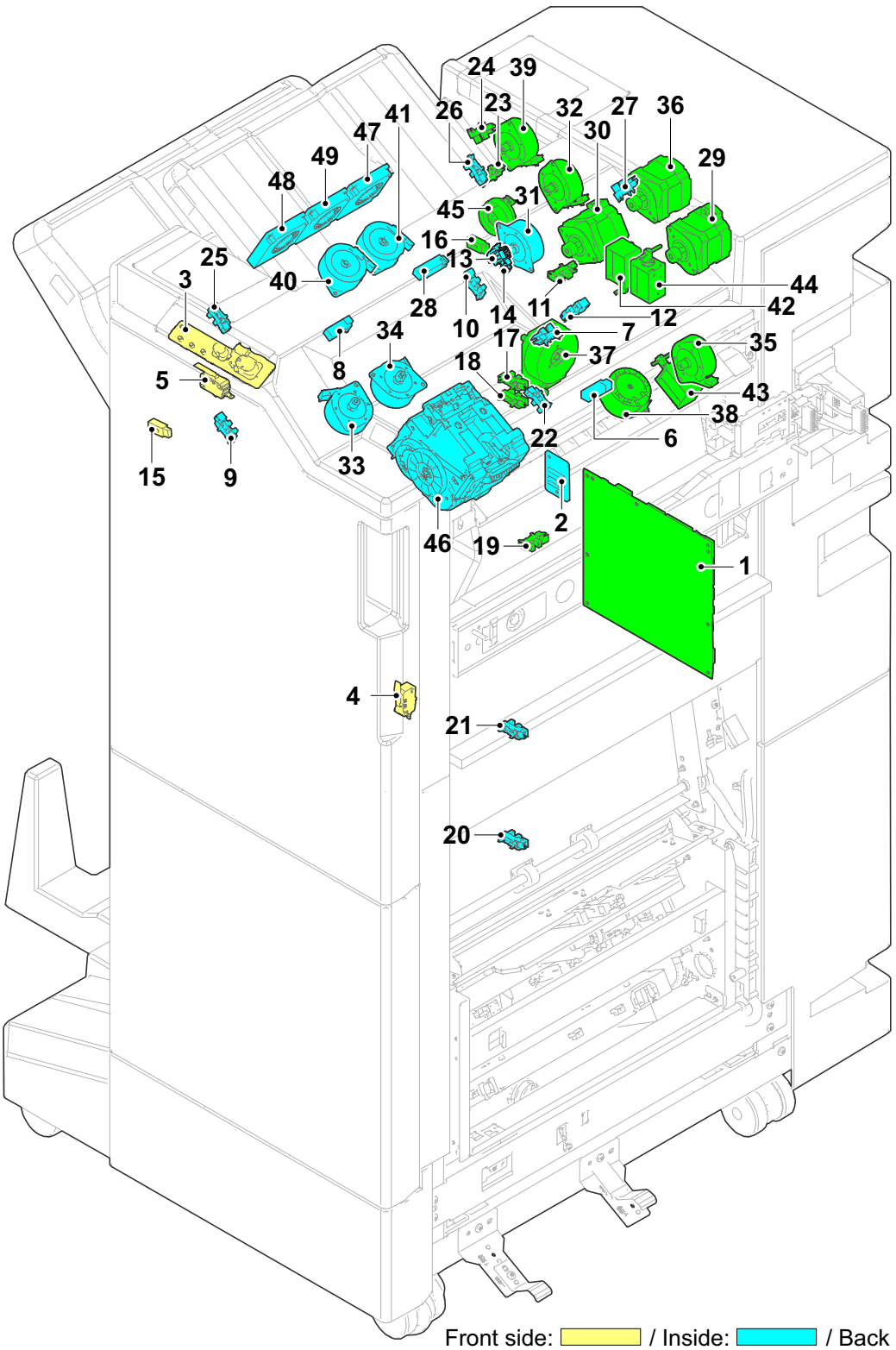

1	DF PWB	Controlling the electric parts.
2	DF staple relay PWB	Relaying the staple unit control signals.
3	DF operation PWB	LED indicators and keys.
4	DF front cover switch	Detecting the front cover open/close.

5	DF exit cover switch	Detecting the exit cover open/close.
6	DF entry sensor	Detecting paper at the entry section.
7	DF middle sensor	Detecting paper in the conveying section.
8	DF exit sensor	Detecting paper at the exit section.
9	DF side registration sensor 1	Detecting home position of the DF front adjusting plate.
10	DF side registration sensor 2	Detecting home position of the DF rear adjusting plate.
11	DF paddle sensor	Detecting home position of the paddle.
12	DF drum sensor	Paper detection at the relief drum.
13	DF adjusting sensor	Detecting home position of the paper guide.
14	DF bundle exit sensor	Detecting position of the bundle exit unit.
15	DF tray upper surface sensor 1	Detecting paper surface on DF main tray.
16	DF tray upper surface sensor 2	Detecting paper surface on DF main tray.
17	DF tray sensor 1	Detecting the exit tray home position.
18	DF tray sensor 2	Detecting the exit tray home position.
19	DF tray sensor 3	Detecting the exit tray middle position.
20	DF tray sensor 4	Detecting the exit tray lower limit.
21	DF tray sensor 5	Detecting the exit tray lower limit (with BF unit).
22	DF slide sensor	Detecting slide position of the staple unit.
23	DF shift set sensor	Detecting home position of the shift guide.
24	DF shift release sensor	Detecting release position of the shift guide.
25	DF shift sensor 1	Detecting home position of the front shift plate.
26	DF shift sensor 2	Detecting home position of the rear shift plate.
27	DF sub exit sensor	Detecting paper to the tray B.
28	DF sub tray full sensor	Detecting tray B paper full.
29	DF entry motor	Driving the entry roller.
30	DF middle motor	Driving the middle roller.
31	DF paddle motor	Driving the paper guides.
32	DF exit release motor	Driving the bundle exit unit.
33	DF side registration motor 1	Driving the adjusting plate front.
34	DF side registration motor 2	Driving the adjusting plate rear.
35	DF relief drum motor	Driving the relief drum.
36	DF exit motor	Driving the exit roller.
37	DF tray motor	Drive exit tray up and down.
38	DF slide motor	Slide the Staple unit.
39	DF shift release motor	Detecting the shift guide release position.

40 DF shift motor 1	Driving the rear shift guide.
41 DF shift motor 2	Driving the front shift guide.
42 DF Feedshift solenoid 1	Switching the flap.
43 DF Feedshift solenoid 2	Switching the flap.
44 DF Feedshift solenoid 3	Switching the flap.
45 DF exit clutch	Driving the exit roller.
46 DF staple unit	Paper stapler.
47 DF exit fan 1	Cooling the exit paper. (Rear) (Not connected)
48 DF exit fan 2	Cooling the exit paper. (Front) (Not connected)
49 DF exit fan 3	Cooling the exit paper. (Middle) (Not connected)

(11-2)Part name table

Name used in service manual	Name used in parts list	Part. No.
1 DF PWB	PARTS PWB DF MAIN ASSY SP	303V89401*
2 DF staple relay PWB	PARTS PWB STAPLER ASSY SP	303NB9402*
3 DF operation PWB	PARTS PWB OPERATION ASSY SP	303NB9403*
4 DF front cover switch	INTER LOCK SWITCH	2FB2716*
5 DF exit cover switch	INTER LOCK SWITCH	2FB27160
6 DF entry sensor	PARTS SENSOR OPT. SP	303NW9406*
7 DF middle sensor	PARTS SENSOR OPT SP	303M89426*
8 DF exit sensor	PARTS SENSOR OPT. SP	303NW9406*
9 DF side registration sensor 1	PARTS SENSOR OPT SP	303M89426*
10 DF side registration sensor 2	PARTS SENSOR OPT SP	303M89426*
11 DF paddle sensor	PARTS SENSOR OPT. SP	302P79401*
12 DF drum sensor	PARTS SENSOR OPT SP	303M89426*
13 DF adjusting sensor	PARTS SENSOR OPT SP	303M89426*
14 DF bundle exit sensor	PARTS SENSOR OPT SP	303M89426*
15 DF tray upper surface sensor 1	SENSOR A,SEPARATION	303H32746*
16 DF tray upper surface sensor 2	PARTS SENSOR OPT. SP	303NB9414*
17 DF tray sensor 1	PARTS SENSOR OPT SP	303M89426*
18 DF tray sensor 2	PARTS SENSOR OPT SP	303M89426*
19 DF tray sensor 3	PARTS SENSOR OPT SP	303M89426*
20 DF tray sensor 4	PARTS SENSOR OPT SP	303M89426*
21 DF tray sensor 5	PARTS SENSOR OPT SP	303M89426*
22 DF slide sensor	PARTS SENSOR OPT SP	303M89426*
23 DF shift set sensor	PARTS SENSOR OPT SP	303M89426*
24 DF shift release sensor	PARTS SENSOR OPT SP	303M89426*

Name used in service manual	Name used in parts list	Part. No.
25 DF shift sensor 1	PARTS SENSOR OPT SP	303M89426*
26 DF shift sensor 2	PARTS SENSOR OPT SP	303M89426*
27 DF sub exit sensor	PARTS SENSOR OPT SP	303M89426*
28 DF sub tray full sensor	PARTS SENSOR OPT. SP	303NW9405*
29 DF entry motor	PARTS MOTOR DP SP	303NV9401*
30 DF middle motor	PARTS MOTOR DP SP	303NV9401*
31 DF paddle motor	MOTOR REVERSE	302HN4410*
32 DF exit release motor	MOTOR REVERSE	302HN4410*
33 DF side registration motor 1	MOTOR REVERSE	302HN4410*
34 DF side registration motor 2	MOTOR REVERSE	302HN4410*
35 DF relief drum motor	MOTOR REVERSE	302HN4410*
36 DF exit motor	PARTS MOTOR DP SP	303NV9401*
37 DF tray motor	PARTS MOTOR-BL BRAKE SP	303NB9405*
38 DF slide motor	PARTS MOTOR-PM MOVING SP	303NB9404*
39 DF shift release motor	MOTOR REVERSE	302HN4410*
40 DF shift motor 1	MOTOR REVERSE	302HN4410*
41 DF shift motor 2	MOTOR REVERSE	302HN4410*
42 DF Feedshift solenoid 1	PARTS SOLENOID FEED SHIFT SP	302K99437*
43 DF Feedshift solenoid 2	PARTS SOLENOID FEED SHIFT SP	302K99437*
44 DF Feedshift solenoid 3	PARTS SOLENOID FEED SHIFT SP	302K99437*
45 DF exit clutch	CLUTCH 50 Z35R	302KV9452*
46 DF staple unit	PARTS STAPLER EH600 SP	303NB9413*
47 DF Exit fan 1	PARTS FAN COOLING LSU 50 SP	302K994A5*
48 DF Exit fan 2	PARTS FAN COOLING LSU 50 SP	302K994A5*
49 DF Exit fan 3	PARTS FAN COOLING LSU 50 SP	302K994A5*

(12)1000-sheet Finisher (DF-7120)

(12-1)Locations

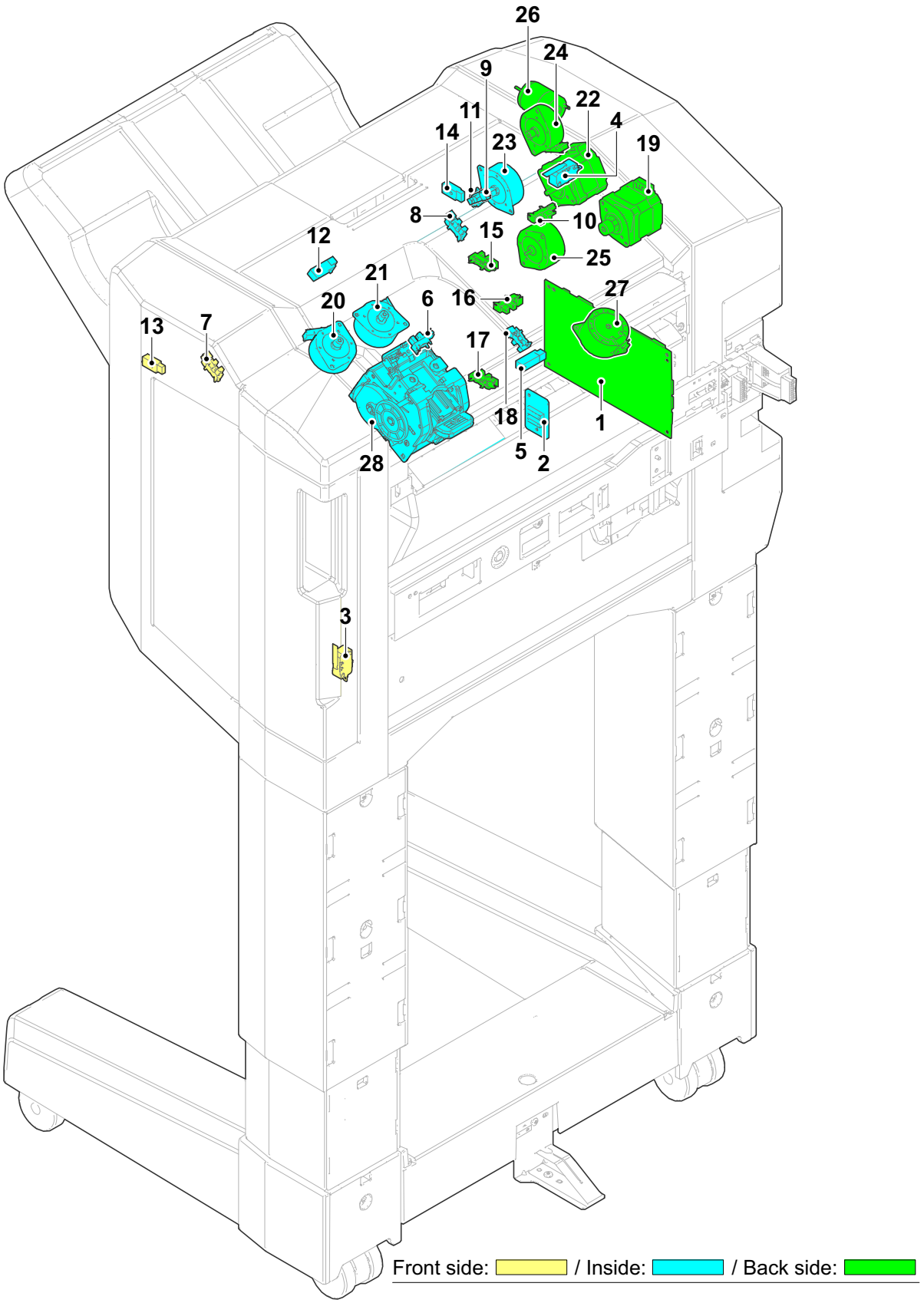

1	DF PWB	Controlling the electric parts.
2	DF staple relay PWB	Relaying the staple unit control signals.
3	DF front cover switch	Detecting the front cover open/close.
4	DF top cover switch	Detecting the top cover open/close.
5	DF entry sensor	Detecting paper at the entry section.
6	DF middle sensor	Detecting paper in the conveying section.
7	DF side registration sensor 1	Detecting home position of the DF front adjusting plate.
8	DF side registration sensor 2	Detecting home position of the DF rear adjusting plate.
9	DF adjusting sensor	Detecting home position of the paper guide.
10	DF paddle sensor	Detecting home position of the paddle.
11	DF bundle exit sensor	Detecting position of the bundle exit unit.
12	DF exit sensor	Detecting paper at the exit section.
13	DF tray upper surface sensor 1	Detecting paper surface on DF main tray.
14	DF tray upper surface sensor 2	Detecting paper surface on DF main tray.
15	DF tray sensor 1	Detecting the exit tray home position.
16	DF tray sensor 2	Detecting the exit tray middle position.
17	DF tray sensor 3	Detecting the exit tray lower limit.
18	DF slide sensor	Detecting slide position of the staple unit.
19	DF entry motor	Driving the entry roller.
20	DF side registration motor 1	Driving the adjusting plate front.
21	DF side registration motor 2	Driving the adjusting plate rear.
22	DF middle motor	Driving the middle roller.
23	DF paddle motor	Driving the paper guides.
24	DF exit release motor	Driving the bundle exit unit.
25	DF exit motor	Driving the exit roller.
26	DF tray motor	Drive exit tray up and down.
27	DF slide motor	Slide the Staple unit.
28	DF staple unit	Paper stapler.

(12-2)Part name table

Name used in service manual	Name used in parts list	Part. No.
1 DF PWB	PARTS PWB DF MAIN ASSY SP	303RV9401*
2 DF staple relay PWB	PARTS PWB STAPLER ASSY SP	303NB9402*
3 DF front cover switch	INTER LOCK SWITCH	2FB2716*
4 DF top cover switch	INTER LOCK SWITCH	2FB2716*

Name used in service manual	Name used in parts list	Part. No.
5 DF entry sensor	PARTS SENSOR OPT. SP	303NW9406*
6 DF middle sensor	PARTS SENSOR OPT SP	303M89426*
7 DF side registration sensor 1	PARTS SENSOR OPT SP	303M89426*
8 DF side registration sensor 2	PARTS SENSOR OPT SP	303M89426*
9 DF adjusting sensor	PARTS SENSOR OPT SP	303M89426*
10 DF paddle sensor	PARTS SENSOR OPT. SP	302P79401*
11 DF bundle exit sensor	PARTS SENSOR OPT SP	303M89426*
12 DF exit sensor	PARTS SENSOR OPT. SP	303NW9406*
13 DF tray upper surface sensor 1	SENSOR A,SEPARATION	303H32746*
14 DF tray upper surface sensor 2	PARTS SENSOR OPT. SP	303NB9414*
15 DF tray sensor 1	PARTS SENSOR OPT SP	303M89426*
16 DF tray sensor 2	PARTS SENSOR OPT SP	303M89426*
17 DF tray sensor 3	PARTS SENSOR OPT SP	303M89426*
18 DF slide sensor	PARTS SENSOR OPT SP	303M89426*
19 DF entry motor	PARTS MOTOR DP SP	303NV9401*
20 DF side registration motor 1	MOTOR REVERSE	302HN4410*
21 DF side registration motor 2	MOTOR REVERSE	302HN4410*
22 DF middle motor	PARTS MOTOR DP SP	303NV9401*
23 DF paddle motor	MOTOR REVERSE	302HN4410*
24 DF exit release motor	PARTS MOTOR-PM MOVING SP	303NB9404*
25 DF exit motor	MOTOR REVERSE	302HN4410*
26 DF tray motor	PARTS DC MOTOR ASSY SP	303NC9402*
27 DF slide motor	PARTS MOTOR-PM MOVING SP	303NB94040
28 DF staple unit	STAPLER EH590	303JY4401*

(13)Mailbox (MT-730(B))

(13-1)Locations

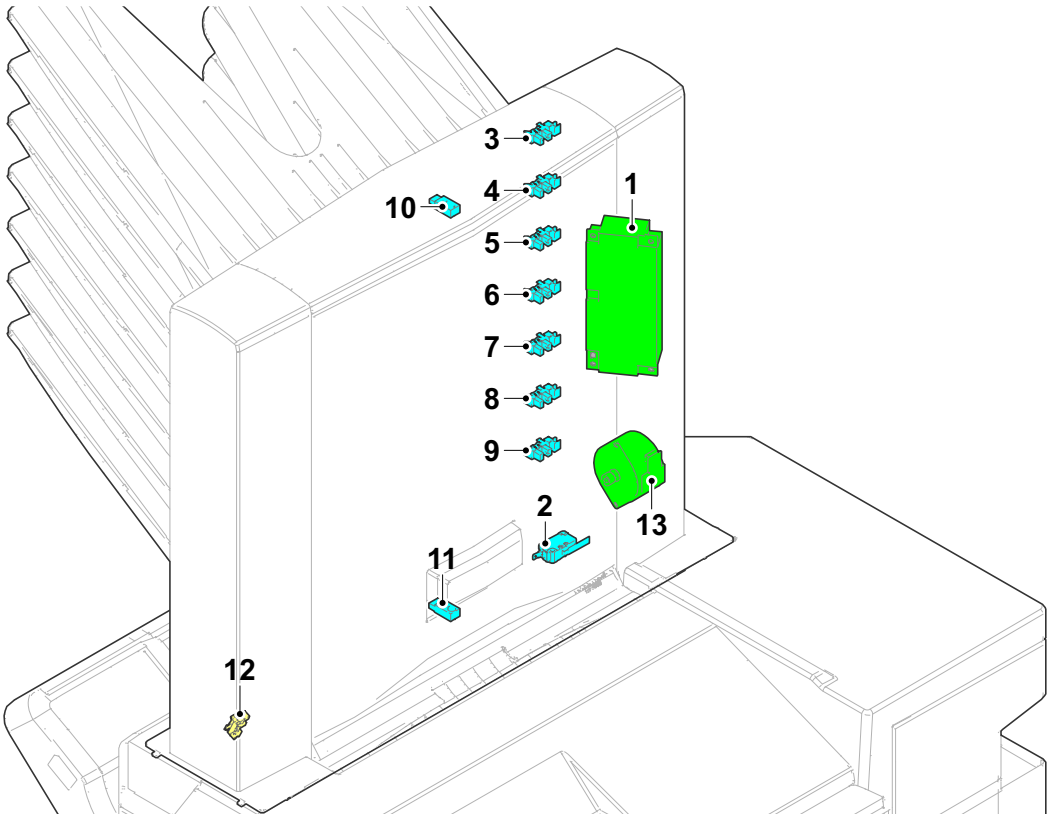

Front side: ▭ / Inside: ▭ / Back side: ▭

1	MT PWB	Controlling electric parts of the mailbox.
2	MT cover switch	Detecting the mail box cover open/close.
3	MT tray sensor 1	Detecting overflow of paper to the tray 1.
4	MT tray sensor 2	Detecting overflow of paper to the tray 2.
5	MT tray sensor 3	Detecting overflow of paper to the tray 3.
6	MT tray sensor 4	Detecting overflow of paper to the tray 4.
7	MT tray sensor 5	Detecting overflow of paper to the tray 5.
8	MT tray sensor 6	Detecting overflow of paper to the tray 6.
9	MT tray sensor 7	Detecting overflow of paper to the tray 7.
10	MT tray exit sensor 1	Detecting the paper jam. (photo receptor)
11	MB tray exit sensor 2	Emitting LED pulses. (photo emitter)
12	MT home position sensor	Controlling the mailbox drive motor.
13	MT conveying motor	Driving the mailbox paper conveying.

(13-2)Part name table

Name used in service manual	Name used in parts list	Part. No.
1 MT PWB	PARTS PWB MAIN ASSY B SP	303N09404*
2 MT cover switch	INTER LOCK SWITCH	2FB2716*

Name used in service manual	Name used in parts list	Part. No.
3 MT tray sensor 1	SENSOR 248NL1	2C92721*
4 MT tray sensor 2	SENSOR 248NL1	2C92721*
5 MT tray sensor 3	SENSOR 248NL1	2C92721*
6 MT tray sensor 4	SENSOR 248NL1	2C92721*
7 MT tray sensor 5	SENSOR 248NL1	2C92721*
8 MT tray sensor 6	SENSOR 248NL1	2C92721*
9 MT tray sensor 7	SENSOR 248NL1	2C92721*
10 MT tray exit sensor 1	SENSOR B SEPARATION	303H32747*
11 MB tray exit sensor 2	SENSOR A,SEPARATION	303H32746*
12 MT home position sensor	SENSOR 248NL1	2C92721*
13 MT conveying motor	MOTOR FEED	2FB2711*

(14)Punch unit (PH-7)

(14-1)Locations

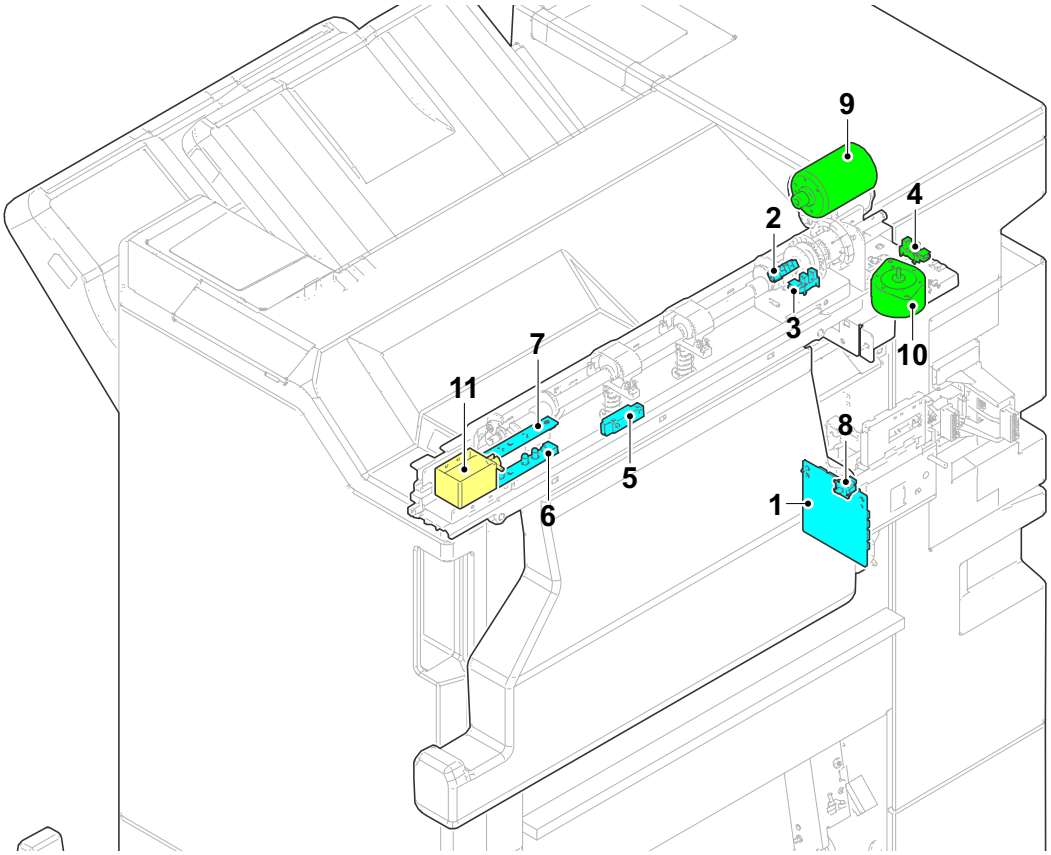

Front side: ▭ / Inside: ▭ / Back side: ▭

1	PH PWB	Controlling the electric parts of the punch unit.
2	PH home position sensor	Detecting home position of the PH.
3	PH pulse sensor	Rotation control for PF cam.
4	PH slide sensor	Detecting the punch unit home position.
5	Punch dust tank full sensor	Detecting the punch dust tank full.
6	PH paper edge sensor 1	Detecting the paper edge.
7	PH paper edge sensor 2	Detecting the paper edge.
8	PH dust tank switch	Detecting the punch dust tank.
9	PH motor	Driving the punch unit.
10	PH slide motor	Driving the punch unit.
11	PH solenoid	Switching the punch holes. (Except 100 V model)

(14-2)Part name table

Name used in service manual	Name used in parts list	Part. No.
1 PH PWB	PARTS PWB PUNCH ASSY SP	303NK9401*
2 PH home position sensor	PARTS SENSOR OPT SP	303M89426*
3 PH pulse sensor	PARTS SENSOR OPT SP	303M89426*

Name used in service manual	Name used in parts list	Part. No.
4 PH slide sensor	PARTS SENSOR OPT SP	303M89426*
5 PH dust tank full sensor	SENSOR FEED B	303H32750*
6 PH paper edge sensor 1	PARTS PWB SENSOR B ASSY SP	303NK9403*
7 PH paper edge sensor 2	PARTS PWB SENSOR A ASSY SP	303NK9402*
8 PH dust tank switch	SW.PUSH	7SP01000006+H01
9 PH motor	PARTS MOTOR PUNCH SP	303PW9402*
10 PH slide motor	PARTS MOTOR-PM MOVING SP	303NB9404*
11 PH solenoid	SOLENOID PUNCH	3H42706*

(15)Booklet folding unit (BF-730)

(15-1)Locations

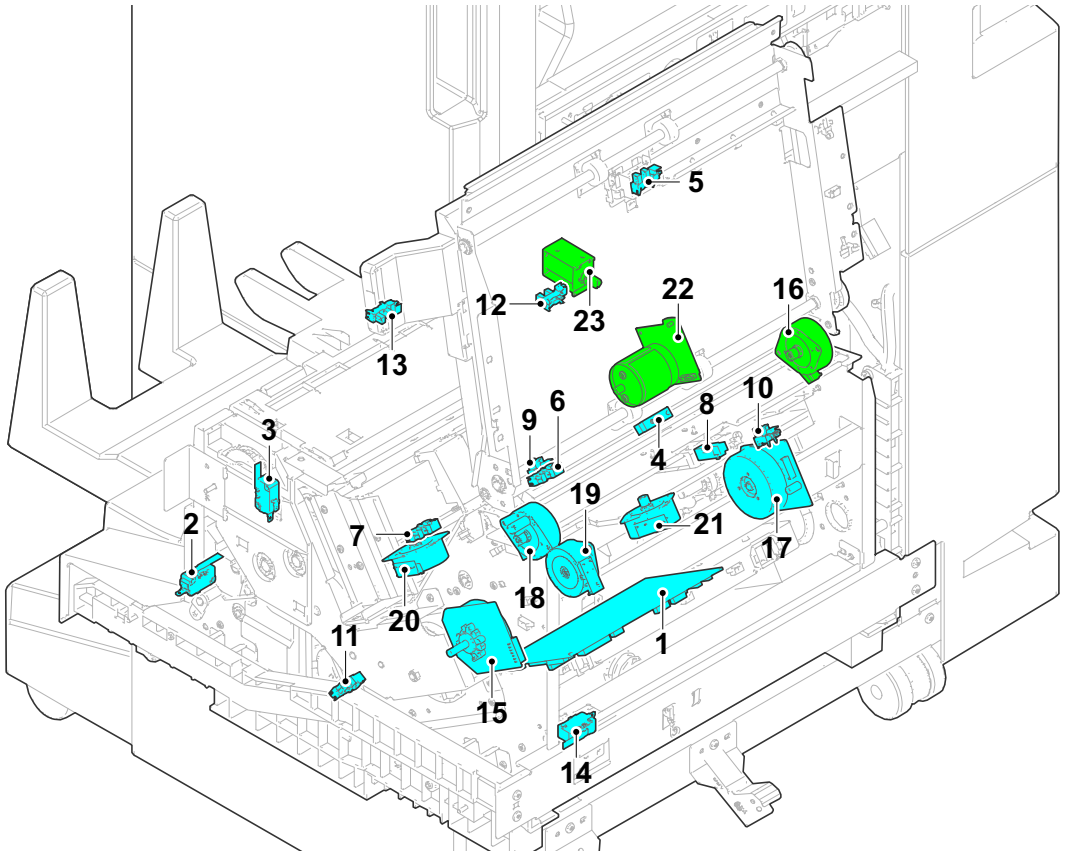

Front side: / Inside: / Back side:

1	BF PWB	Controlling the electric parts of the folding unit.
2	BF tray switch	Detecting the folding tray open/close.
3	BF left cover switch	Detecting the left cover open/close.
4	BF paper entry sensor	Detecting paper entering into the folding unit.
5	BF vertical conveying sensor	Detecting paper on the BF bridge section.
6	BF paper sensor	Detecting paper on the folding bridge section.
7	BF adjusting sensor 1	Detecting home position of the lower BF moving plate.
8	BF adjusting sensor 2	Detecting home position of the upper BF moving plate.
9	BF side registration sensor 1	Detecting home position of the BF side registration guide.
10	BF side registration sensor 2	Detecting home position of the BF side registration guide.
11	BF blade sensor	Detecting BF blade home position.
12	BF exit sensor	Detecting paper to the folding tray.
13	BF tray full sensor	Detecting folding tray paper full.
14	BF switch	Detecting the folding unit.
15	BF main motor	Driving the folding conveying.

16 BF paper entry motor	Driving the entry roller.
17 BF blade motor	Driving the BF blade.
18 BF adjusting motor 1	Driving lower folding adjuster plate.
19 BF adjusting motor 2	Driving upper folding adjuster plate.
20 BF side registration motor 1	Driving the lower BF side registration guide.
21 BF side registration motor 2	Driving the upper BF side registration guide.
22 BF staple motor	Driving the BF staple.
23 BF feedshift solenoid	Operates the BF flap guide.

(15-2)Part name table

Name used in service manual	Name used in parts list	Part. No.
1 BF PWB	PARTS PWB MAIN ASSY SP	303ND9401*
2 BF tray switch	INTER LOCK SWITCH	2FB2716*
3 BF left cover switch	INTER LOCK SWITCH	2FB2716*
4 BF paper entry sensor	SENSOR OPT.	303NW9406*
5 BF vertical conveying sensor	SENSOR OPT.	303M89426*
6 BF paper sensor	SENSOR OPT.	303M89426*
7 BF adjusting sensor 1	SENSOR OPT.	303M89426*
8 BF adjusting sensor 2	SENSOR OPT.	303NW9406*
9 BF side registration sensor 1	SENSOR OPT.	303M89426*
10 BF side registration sensor 2	SENSOR OPT.	303M89426*
11 BF blade sensor	SENSOR OPT.	303M89426*
12 BF exit sensor	SENSOR OPT.	303M89426*
13 BF tray full sensor	SENSOR OPT.	303M89426*
14 BF switch	INTER LOCK SWITCH	2FB2716*
15 BF main motor	PARTS MOTOR-BL W40 ASSY SP	302V89417*
16 BF paper entry motor	MOTOR REVERSE	302HN4410*
17 BF blade motor	PARTS MOTOR-BL BRAKE SP	303NB9405*
18 BF adjusting motor 1	MOTOR REVERSE	302HN4410*
19 BF adjusting motor 2	MOTOR REVERSE	302HN4410*
20 BF side registration motor 1	MOTOR REVERSE	302HN4410*
21 BF side registration motor 2	MOTOR REVERSE	302HN4410*
22 BF staple motor	- (STAPLER EH280)	- (303J14401*)
23 BF feedshift solenoid	SOLENOID FEED SHIFT	302K99437*

(16)100 sheet staple finisher (DF-7150)

(16-1)PWBs

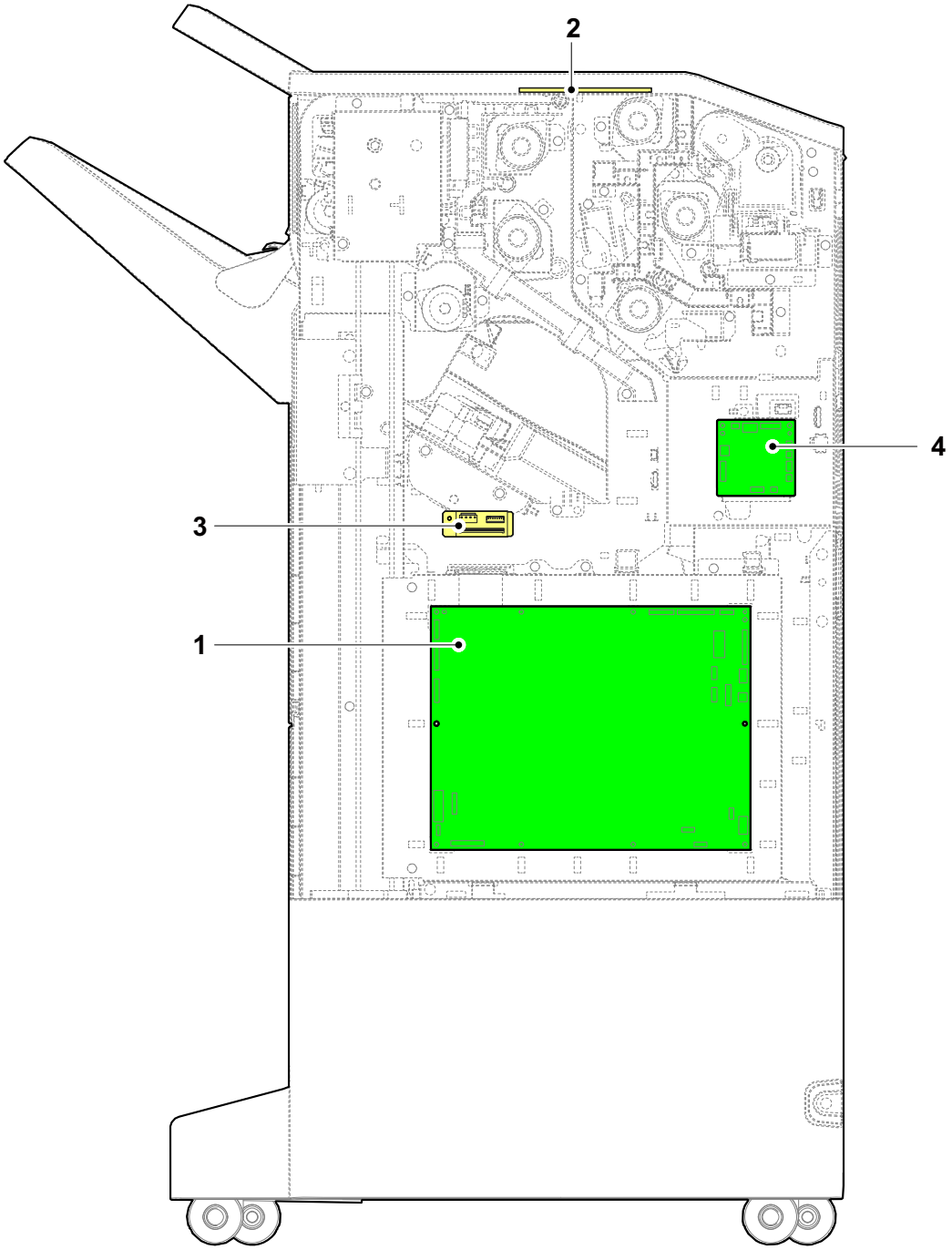

Front side: / Inside: / Back side:

1	DF PWB	Controlling the electric parts.
2	DF operation PWB	Consisting of LEDs and keys.
3	DF staple relay PWB	Relaying the staple unit control signals.
4	PH PWB (Punch unit)	Controlling the electric parts of the punch unit.

(16-2)Part name table

Name used in service manual	Name used in parts list	Part. No.
1 DF PWB	PARTS PWB DF MAIN ASSY SP	303S89401*
2 DF operation PWB	PARTS PWB OPERATION ASSY (SP)	303S89403*
3 DF staple relay PWB	PARTS PWB STAPLE ASSY (SP)	303S89402*
4 PH PWB	PARTS PWB PUNCH ASSY SP	303NK9401*

(16-3)Sensors and Switches

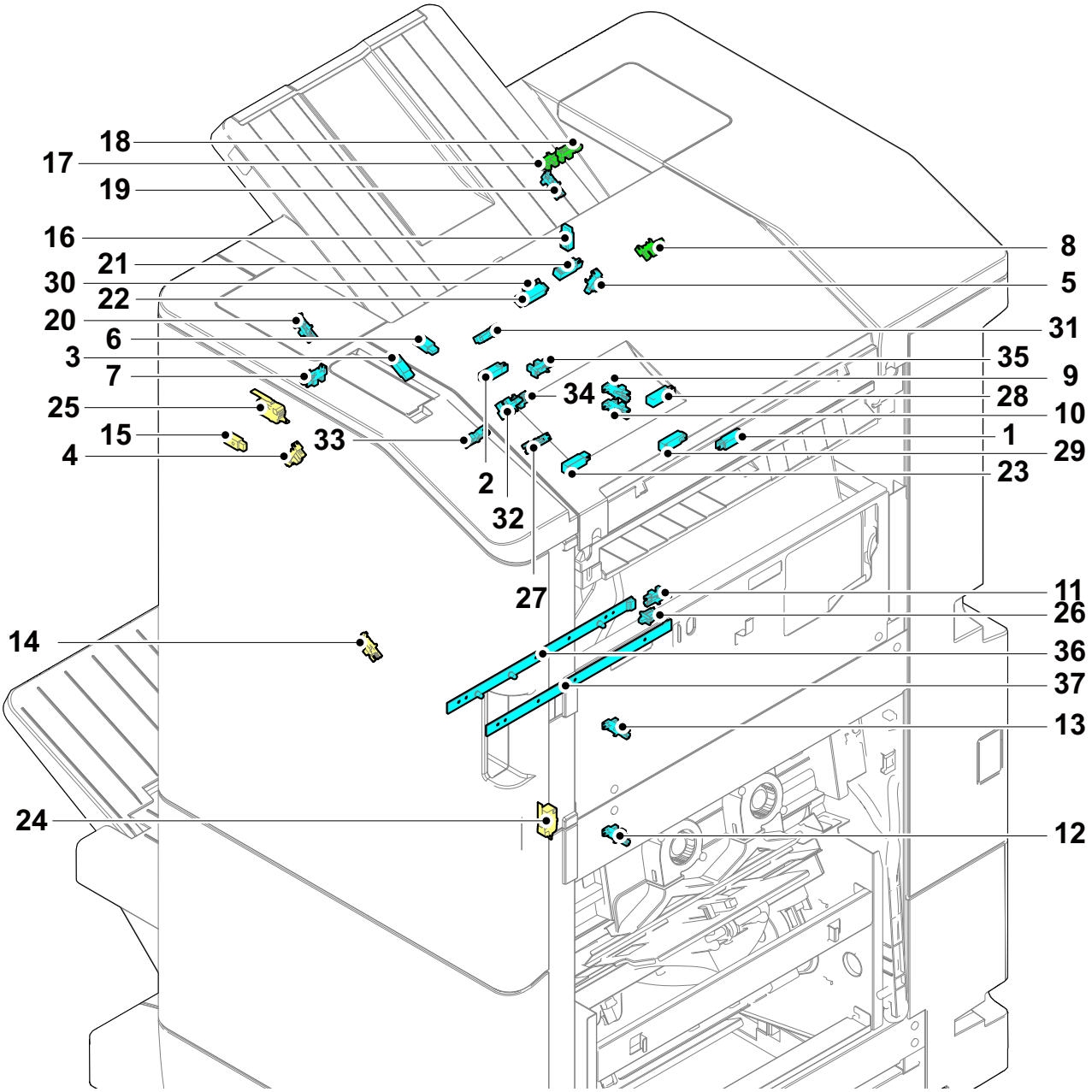

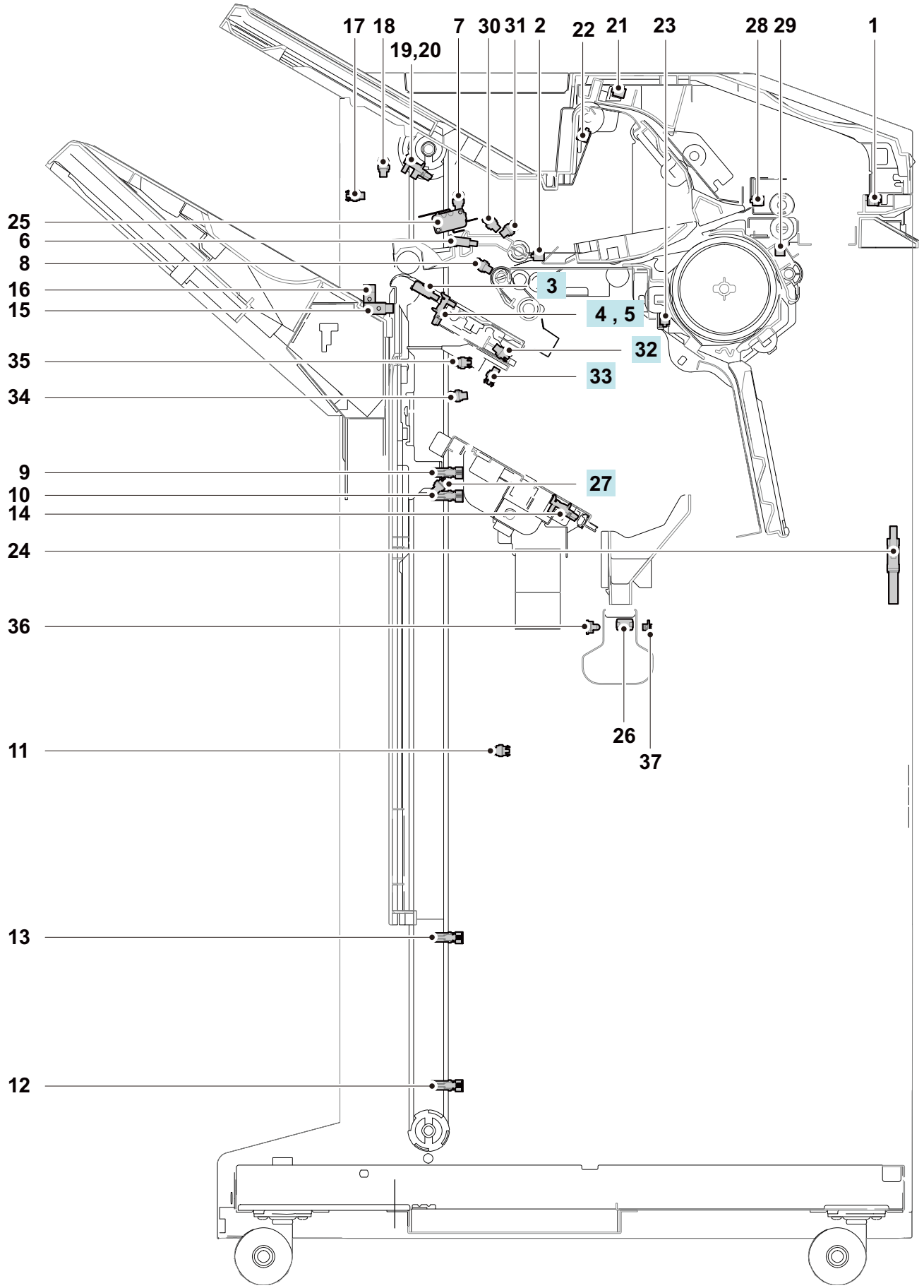

1	DF entry sensor	Detecting presence of paper at the paper entry section.
2	DF middle sensor	Detecting presence of paper in the conveying section.

3	DF exit paper sensor	Detecting presence of paper the exit section.
4	DF side registration sensor 1	Detecting the adjusting DF plate front home position.
5	DF side registration sensor 2	Detecting the adjusting DF plate rear home position.
6	JS exit paper sensor	Detecting presence of paper the exit section.
7	DF withdraw pulley pressure release sensor	Detecting the withdraw pulley pressure release position.
8	DF adjusting release HP sensor	Detect adjusting pulley release.
9	DF tray sensor 1	Detecting the exit tray upper limit.
10	DF tray sensor 2	Detecting the exit tray home position.
11	DF tray sensor 3	Detecting the exit tray middle position.
12	DF tray sensor 4	Detecting the exit tray lower limit.
13	DF tray sensor 5	Detecting the exit tray lower limit (when the folding unit is installed).
14	DF slide sensor	Detecting slide position of the staple unit.
15	DF tray upper surface sensor 1	Detecting paper surface on the DF main tray (Emit).
16	DF tray upper surface sensor 2	Detecting paper surface on the DF main tray (Receptor).
17	DF shift set sensor	Detecting home position of the shift guide.
18	DF shift release sensor	Detecting release position of the shift guide.
19	DF rear shift HP sensor	Detecting home position of the rear shift plate.
20	DF front shift HP sensor	Detecting home position of the front shift plate.
21	DF exit pressure release HP sensor	Detecting home position of the exit pressure release.
22	DF sub tray full sensor	Detecting sub tray paper full.
23	DF drum sensor	Paper detection at the relief drum.
24	DF front cover switch	Detecting the front cover open/close.
25	DF exit cover switch	Detecting the exit cover open/close.
26	DF staple tank switch	Detect waste staple tank.
27	DF exit paddle HP sensor	Detect home position of exit paddle.
28	DP entrance timing sensor	Timing sensor of paper conveying.
29	DF Drum timing (Relief path) sensor.	Paper stop timing sensor in relief drum section.
30	DF trail press guide HP sensor.	Detect home position of trail press guide.
31	DF withdraw release HP sensor	Detect home position of paper withdraw guide.
32	DF bundle exit sensor 2	Detect home position of bundle exit 2.
33	DF bundle exit sensor 1	Detect home position of bundle exit 1.
34	DF exit support guide HP sensor.	Detect home position of paper support guide.
35	DF exit paper press sensor 2	Detect home position of exit paper press.
36	DF staple full sensor 1	Detect waste staple full.
37	DF staple full sensor 2	Detect waste staple full.

(16-4)Part name table

Name used in service manual	Name used in parts list	Part. No.
1 DF entry sensor	PARTS SENSOR OPT. SP	303NW9406*
2 DF middle sensor	PARTS SENSOR OPT. SP	303NW9404*
3 DF exit paper sensor	PARTS SENSOR OPT. SP	303NB9414*
4 DF side registration sensor 1	PARTS SENSOR OPT. SP	302P79401*
5 DF side registration sensor 2	PARTS SENSOR OPT. SP	302P79401*
6 JS exit paper sensor	SENSOR A,SEPARATION	303H32746*
7 DF bundle exit sensor	PARTS SENSOR OPT. SP	302P79401*
8 DF adjusting release HP sensor	PARTS SENSOR OPT. SP	302P79401*
9 DF tray sensor 1	PARTS SENSOR OPT. SP	302P79401*
10 DF tray sensor 2	PARTS SENSOR OPT. SP	302P79401*
11 DF tray sensor 3	PARTS SENSOR OPT. SP	302P79401*
12 DF tray sensor 4	PARTS SENSOR OPT. SP	302P79401*
13 DF tray sensor 5	PARTS SENSOR OPT. SP	302P79401*
14 DF slide sensor	PARTS SENSOR OPT. SP	302P79401*
15 DF tray upper surface sensor 1	SENSOR A,SEPARATION	303H32746*
16 DF tray upper surface sensor 2	PARTS SENSOR OPT. SP	303NB9414*
17 DF shift set sensor	PARTS SENSOR OPT. SP	302P79401*
18 DF shift release sensor	PARTS SENSOR OPT. SP	302P79401*
19 DF rear shift HP sensor	PARTS SENSOR OPT. SP	302P79401*
20 DF front shift HP sensor	PARTS SENSOR OPT. SP	302P79401*
21 DF sub exit sensor	PARTS SENSOR OPT. SP	303NW9406*
22 DF sub tray full sensor	PARTS SENSOR OPT. SP	303NW9405*
23 DF drum sensor	PARTS SENSOR OPT. SP	303NW9406*
24 DF front cover switch	SW.MICRO	7SM010102+++H01
25 DF exit cover switch	SW.MICRO	7SM010102+++H01
26 DF staple tank switch	SW.PUSH	7SP01000007+H01
27 DF exit paddle HP sensor	PARTS SENSOR OPT. SP	302P79401*
28 DP entrance timing sensor	PARTS SENSOR OPT. SP	303NW9406*
29 DF Drum timing sensor	PARTS SENSOR OPT. SP	302P79401*
30 DF trail press guide HP sensor	PARTS SENSOR OPT. SP	302P79401*
31 DF withdraw release HP sensor	PARTS SENSOR OPT. SP	302P79401*
32 DF bundle exit sensor 2	PARTS SENSOR OPT. SP	302P79401*
33 DF bundle exit sensor 1	PARTS SENSOR OPT. SP	302P79401*
34 DF exit support guide HP sensor	PARTS SENSOR OPT. SP	302P79401*

Name used in service manual	Name used in parts list	Part. No.
35 DF exit paper press sensor	PARTS SENSOR OPT. SP	302P79401*
36 DF staple full sensor 1	PARTS PWB SENSOR C ASSY SP	303R19404*
37 DF staple full sensor 2	PARTS PWB SENSOR D ASSY SP	303R19405*

(16-5)Motors

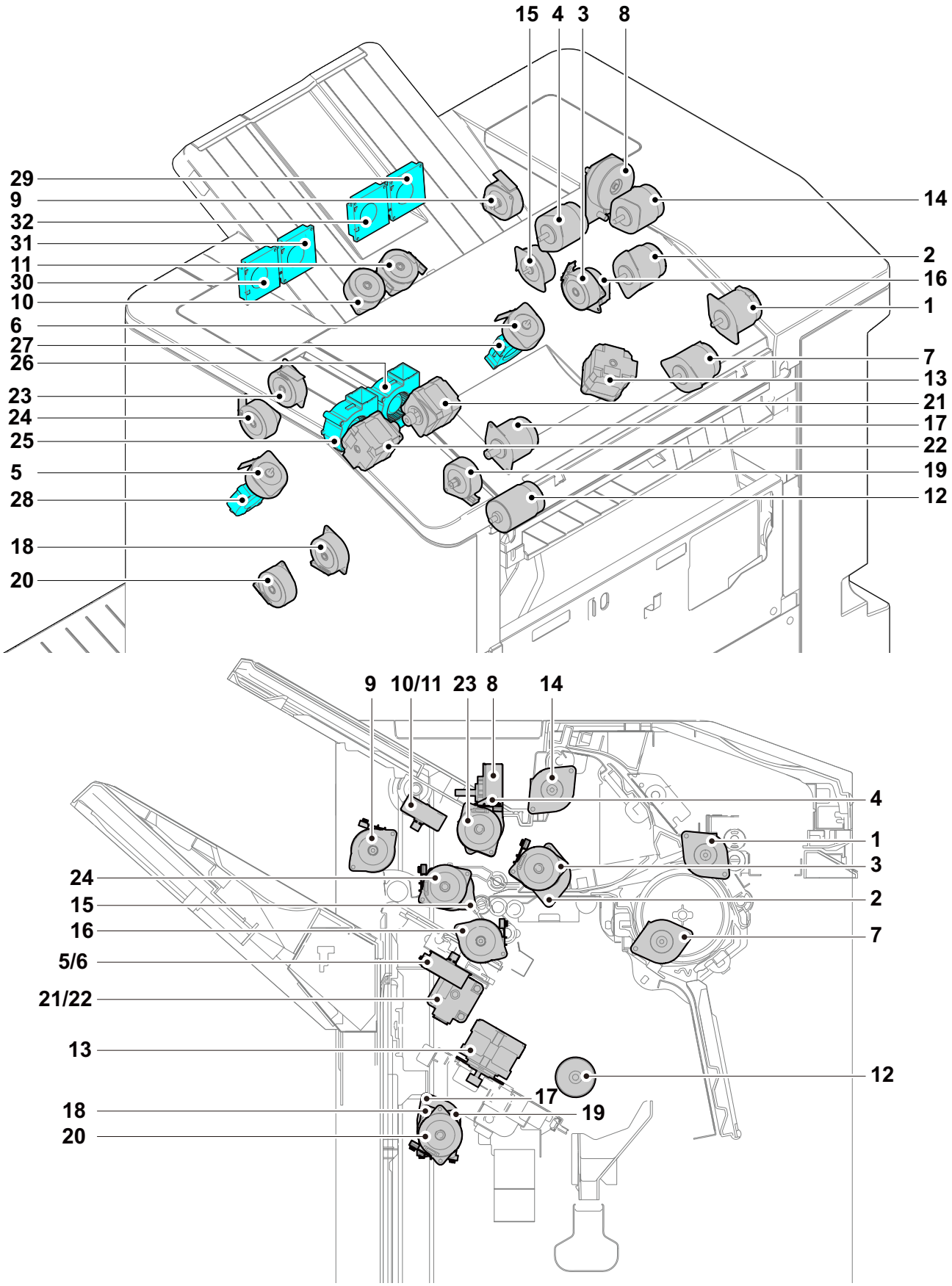

1	DF entry motor	Driving the entry roller.
2	DF middle motor	Driving the middle roller.

3	DF adjusting pulley motor	Driving adjusting pulley
4	DF upper exit motor	Driving withdraw puller of upper exit roller.
5	DF side registration motor 1	Driving the adjusting plate front.
6	DF side registration motor 2	Driving the adjusting plate rear.
7	DF relief drum motor	Driving the relief drum.
8	DF tray motor	Driving exit tray up and down.
9	DF shift release motor	Detecting release position of the shift guide.
10	DF shift motor 1	Driving the rear shift guide.
11	DF shift motor 2	Driving the front shift guide.
12	DF staple motor	Driving staple unit.
13	DF slide motor	Slide the Staple unit.
14	DF sub tray exit motor	Driving sub tray exit roller.
15	DF trail press guide motor.	Driving vertical motion of trail press guide.
16	DF adjusting release HP sensor	Driving adjusting pulley release.
17	DF exit motor	Driving main tray exit roller.
18	DF exit support guide motor.	Driving paper support guide.
19	DF exit paper press motor.	Driving exit paper press.
20	DF exit paddle motor	Driving exit paddle.
21	DF bundle exit motor 1	Driving bundle exit 1.
22	DF bundle exit motor 2	Driving bundle exit 2.
23	DF withdraw pulley pressure release motor	Driving vertical motion of paper withdraw guide.
24	DF exit release motor	Driving the bundle exit unit.
25	DF bundle exit front fan	Cooling exit paper.
26	DF bundle exit rear fan	Cooling exit paper.
27	DF middle rear exit fan motor	Cooling exit paper.
28	DF middle front exit fan motor	Cooling exit paper.
29	DF upper rear exit fan	Cooling exit paper.
30	DF upper front exit fan	Cooling exit paper.
31	DF upper middle exit fan 1	Cooling exit paper.
32	DF upper middle exit fan 2	Cooling exit paper.

(16-6)Part name table

Name used in service manual	Name used in parts list	Part. No.
1 DF entry motor	PARTS MOTOR-BL INNER W20 SP	303RL9403*
2 DF middle motor	PARTS MOTOR-BL INNER W20 SP	303RL9403*
3 DF adjusting pulley motor	MOTOR REVERSE	302HN4410*
4 DF upper exit motor (withdraw)	PARTS MOTOR-BL INNER W20 SP	303RL9403*
5 DF side registration motor 1	MOTOR REVERSE	302HN4410*
6 DF side registration motor 2	MOTOR REVERSE	302HN4410*
7 DF relief drum motor	PARTS MOTOR-BL INNER W20 SP	303RL9403*
8 DF tray motor	PARTS MOTOR-BL BRAKE SP	303NB9405*
9 DF shift release motor	MOTOR REVERSE	302HN4410*
10 DF shift motor 1	MOTOR REVERSE	302HN4410*
11 DF shift motor 2	MOTOR REVERSE	302HN4410*
12 DF staple motor	PARTS STAPLER EH1200 (SP)	303S89412*
13 DF slide motor	PARTS MOTOR DP SP	303NV9401*
14 DF sub tray exit motor	PARTS MOTOR-BL INNER W20 SP	303RL9403*
15 DF trail press guide motor.	MOTOR REVERSE	302HN4410*
16 DF adjusting release HP sensor	MOTOR REVERSE	302HN4410*
17 DF exit motor	PARTS MOTOR-BL INNER W20 SP	303RL9403*
18 DF exit support guide motor.	MOTOR REVERSE	302HN4410*
19 DF exit paper press motor.	MOTOR REVERSE	302HN4410*
20 DF exit paddle motor	MOTOR REVERSE	302HN4410*
21 DF bundle exit motor 1	PARTS MOTOR DP SP	303NV9401*
22 DF bundle exit motor 2	PARTS MOTOR DP SP	303NV9401*
23 DF withdraw pulley pressure release motor	MOTOR REVERSE	302HN4410*
24 DF exit release motor	MOTOR REVERSE	302HN4410*
25 DF bundle exit front fan	PARTS FAN COOLING LSU 60 SP	302LC9438*
26 DF bundle exit rear fan	PARTS FAN COOLING LSU 60 SP	302LC9438*
27 DF middle rear exit fan motor	PARTS,FAN IMAGE SP	302FZ9466*
28 DF middle front exit fan motor	PARTS,FAN IMAGE SP	302FZ9466*
29 DF upper rear exit fan	FAN COOLING LSU 50	302K94454*
30 DF upper front exit fan	FAN COOLING LSU 50	302K94454*
31 DF upper middle exit fan 1	FAN COOLING LSU 50	302K94454*
32 DF upper middle exit fan 2	FAN COOLING LSU 50	302K94454*

(16-7)Solenoid, Clutch

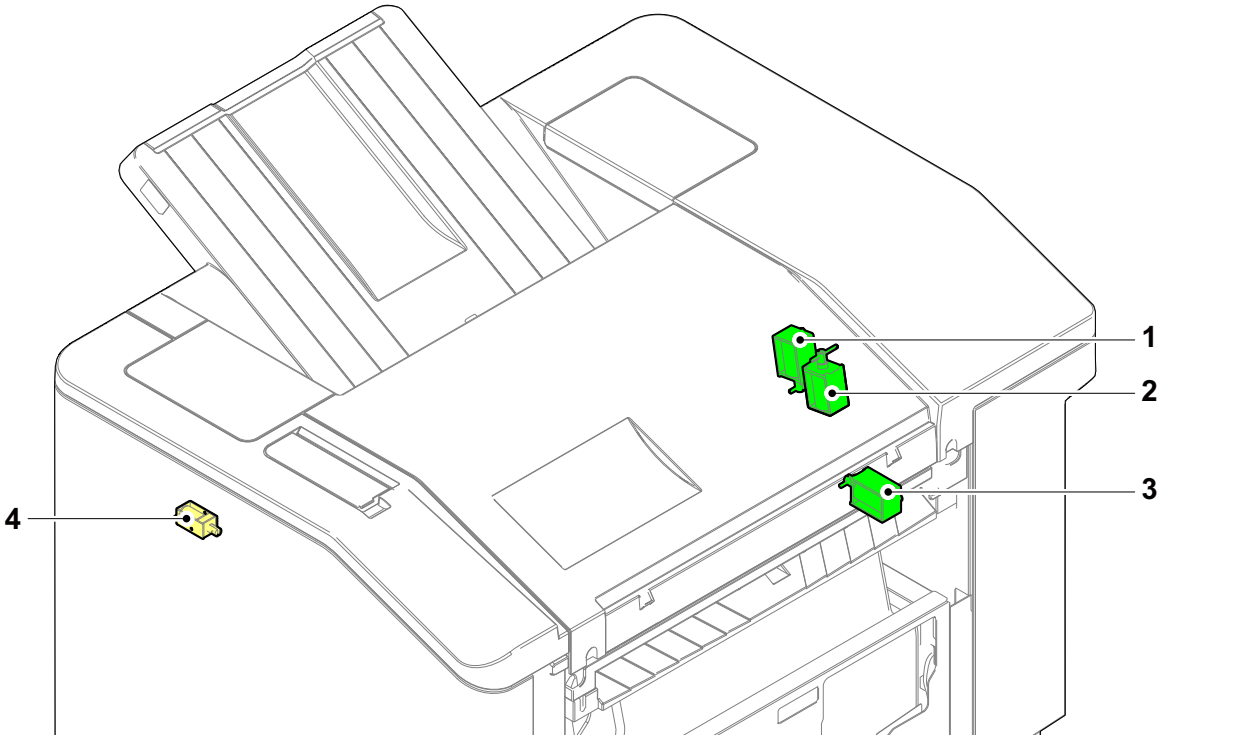

Front side: ▭ / Inside: ▭ / Back side: ▭

1	DF Feedshift solenoid 1	DF switching path to the relief drum.
2	DF Feedshift solenoid 2	DF Switching path to the DF tray B.
3	DF Feedshift solenoid 3	DF switching path to the BF bridge.
4	DF exit switching solenoid	Change the position where gets DF exit switch enable in stapling.

(16-8)Part name table

Name used in service manual	Name used in parts list	Part. No.
1 DF Feedshift solenoid 1	PARTS SOLENOID FEED SHIFT SP	302K99437*
2 DF Feedshift solenoid 2	PARTS SOLENOID FEED SHIFT SP	302K99437*
3 DF Feedshift solenoid 3	PARTS SOLENOID FEED SHIFT SP	302K99437*
4 DF exit switching solenoid	SOLENOID ASSY	302F94409*

(17)Folding Unit (BF-9100)

(17-1)Motor, Solenoid, PWB

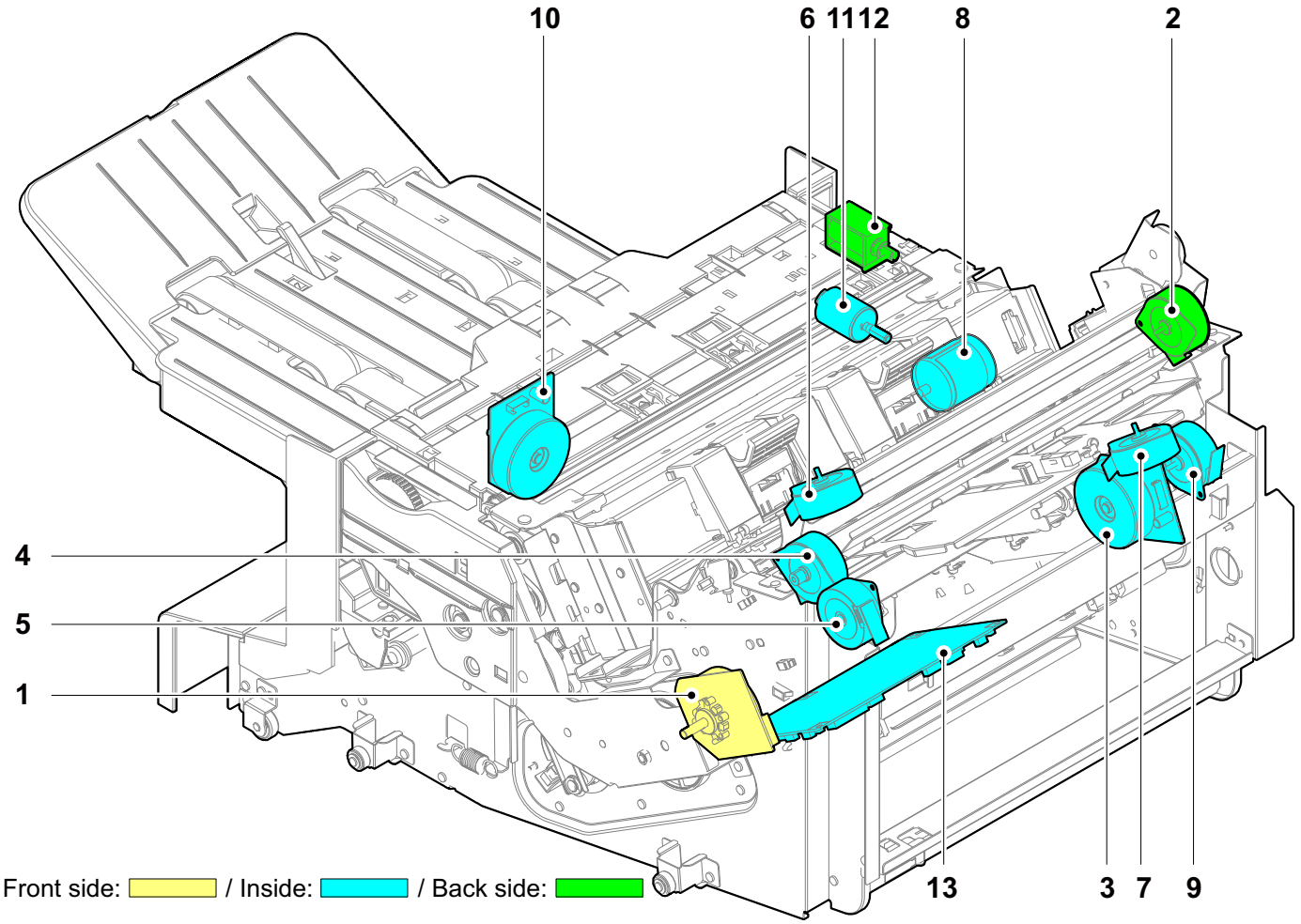

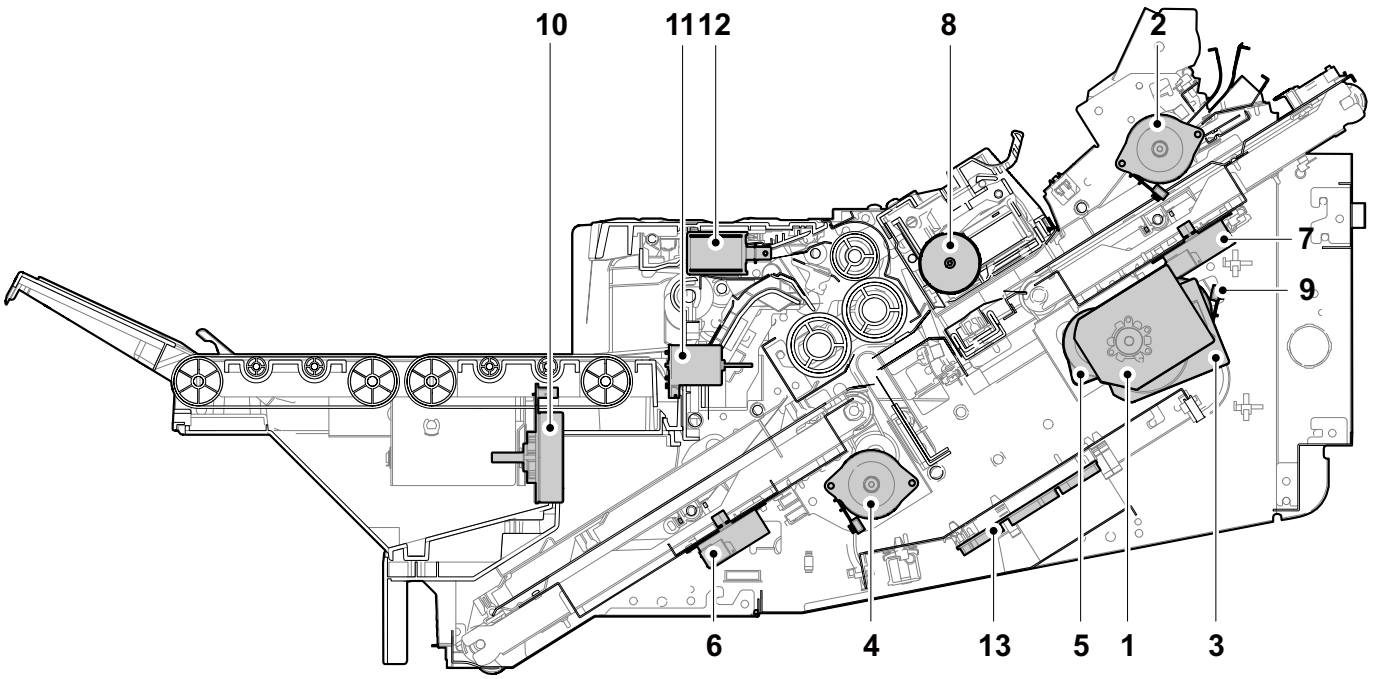

1	BF main motor	Driving the paper conveying system.
2	BF paper entry motor	Driving the entry roller.
3	BF blade motor	Driving the BF blade.
4	BF adjusting motor 1	Driving lower folding adjuster plate.
5	BF adjusting motor 2	Driving upper folding adjuster plate.
6	BF side registration motor 1	Detecting home position of the BF lower side registration guide.
7	BF side registration motor 2	Detecting home position of the BF upper side registration guide.
8	BF staple motor	Driving the BF staple.
9	BF paddle motor	Driving conveying paddle.
10	BF conveying tray motor	Driving conveying tray belt.
11	BF exit pressure release motor	Driving exit pressure release
12	BF feedshift solenoid	Operates the BF flap guide.
13	BF PWB	Electric parts layout

(17-2)Part name table

Name used in service manual	Name used in parts list	Part. No.
1 BF main motor	PARTS MOTOR-BL W40 ASSY SP	302V89417*
2 BF paper entry motor	MOTOR REVERSE	302HN4410*
3 BF blade motor	PARTS MOTOR-BL BRAKE SP	303NB4403*
4 BF adjusting motor 1	MOTOR REVERSE	302HN4410*
5 BF adjusting motor 2	MOTOR REVERSE	302HN4410*
6 BF side registration motor 1	MOTOR REVERSE	302HN4410*
7 BF side registration sensor 2	MOTOR REVERSE	302HN4410*
8 BF staple motor	- (STAPLER EH280)	- 303J14401*
9 BF paddle motor	MOTOR REVERSE	302HN4410*
10 BF conveying tray motor	PARTS MOTOR-BL BRAKE SP	303NB4403*
11 BF exit pressure release motor	PARTS DC MOTOR ASSY C SP	302R49429*
12 BF feedshift solenoid	PARTS SOLENOID FEED SHIFT SP	302K99437*
13 BF PWB	PARTS PWB BF MAIN ASSY WITH SW (SP)	303SP9401*

(17-3)Sensors and Switches

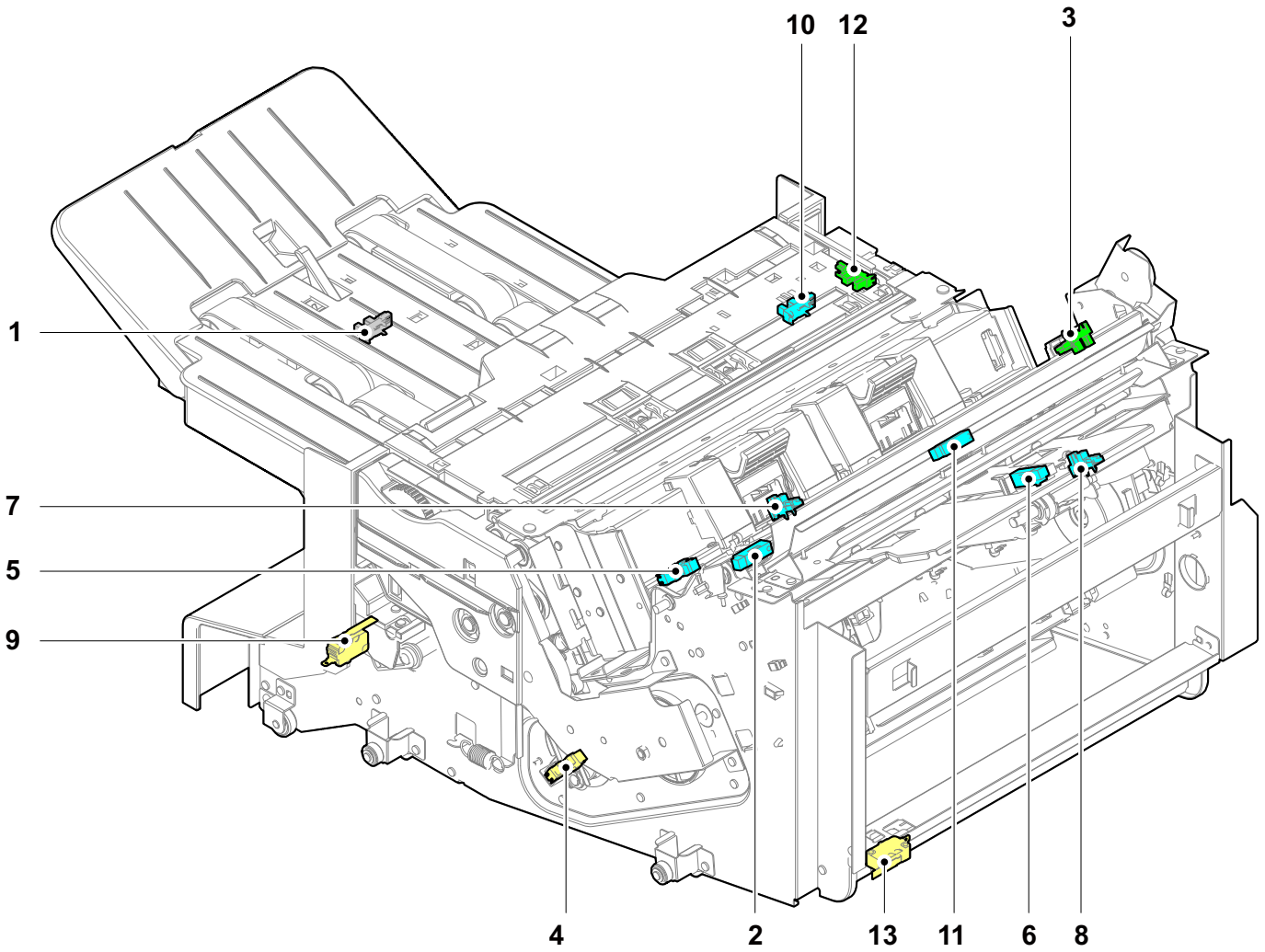

Front side: ▭ / Inside: ▭ / Back side: ▭

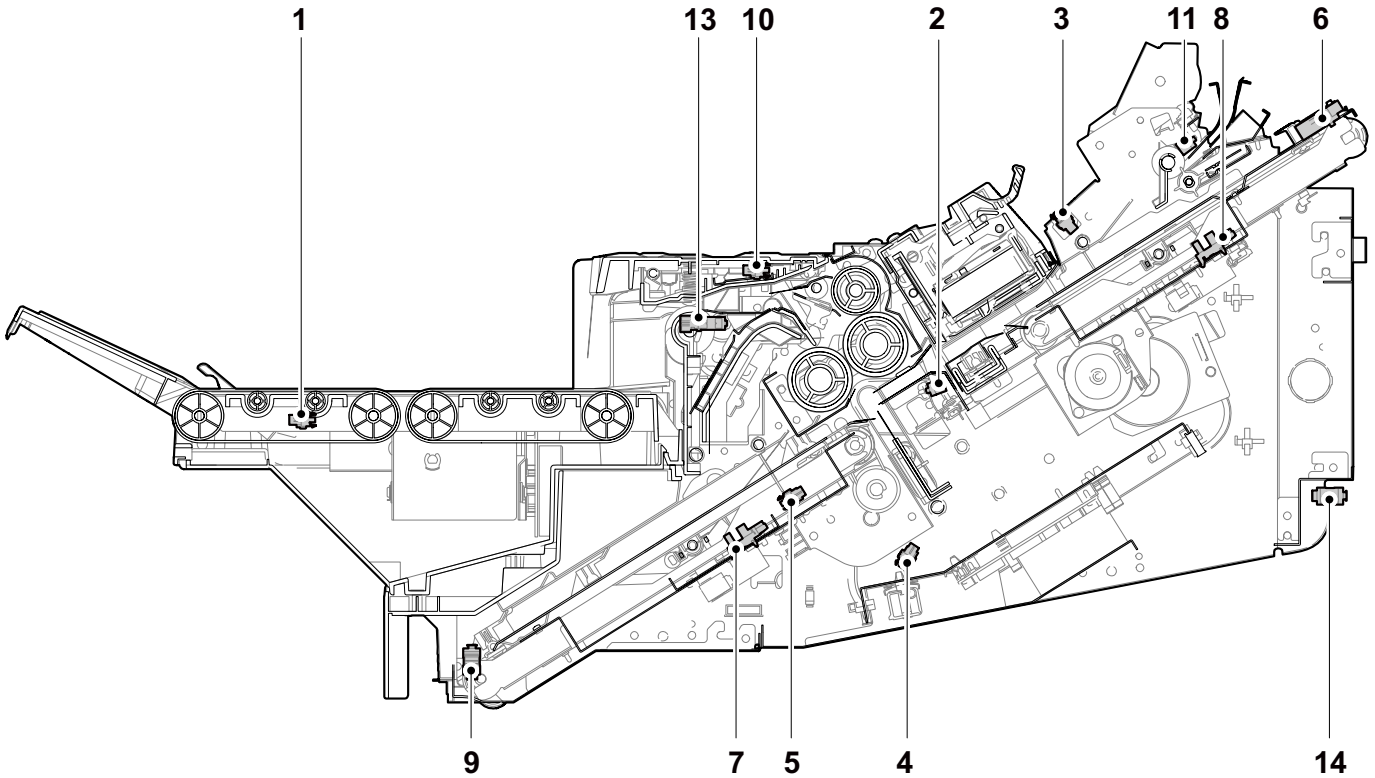

1	BF conveying tray sensor	Detecting paper on the conveying tray.
2	BF paper sensor	Detecting paper.
3	BF paddle sensor	Detect home position of conveying paddle.
4	BF blade sensor	Detecting home position of the blade.
5	BF adjusting sensor 1	Detecting lower moving plate home position.
6	BF adjusting sensor 2	Detecting upper moving plate home position.
7	BF side registration sensor 1	Detecting lower side registration guide home position.
8	BF side registration sensor 2	Detecting upper side registration guide home position.
9	BF tray switch	Detecting the folding tray open/close.
10	BF exit sensor	Detecting paper exit to the folding tray.
11	BF paper entry sensor	Detecting paper entering into the folding unit.
12	BF exit pressure release sensor	Detect home position of the exit pressure release.
13	BF set switch	Detecting the unit.

(17-4)Part name table

Name used in service manual	Name used in parts list	Part. No.
1 BF conveying tray sensor	PARTS SENSOR OPT. SP	302P79401*
2 BF paper sensor	PARTS SENSOR OPT. SP	303NW9406*
3 BF paddle sensor	PARTS SENSOR OPT. SP	302P79401*
4 BF blade sensor	PARTS SENSOR OPT. SP	303M89426*
5 BF adjusting sensor 1	PARTS SENSOR OPT. SP	303M89426*
6 BF adjusting sensor 2	PARTS SENSOR OPT. SP	303NW9406*
7 BF side registration sensor 1	PARTS SENSOR OPT. SP	302P79401*
8 BF side registration sensor 2	PARTS SENSOR OPT. SP	302P79401*
9 BF tray switch	SW.MICRO	7SM010102+++H01
10 BF exit sensor	PARTS SENSOR OPT. SP	302P79401*
11 BF paper entry sensor	PARTS SENSOR OPT. SP	303NW9406*
12 BF exit pressure release sensor	PARTS SENSOR OPT. SP	302P79401*
13 BF set switch	SW.MICRO	7SM010102+++H01

(17-5)Sensor, Fan (BF Bridge)

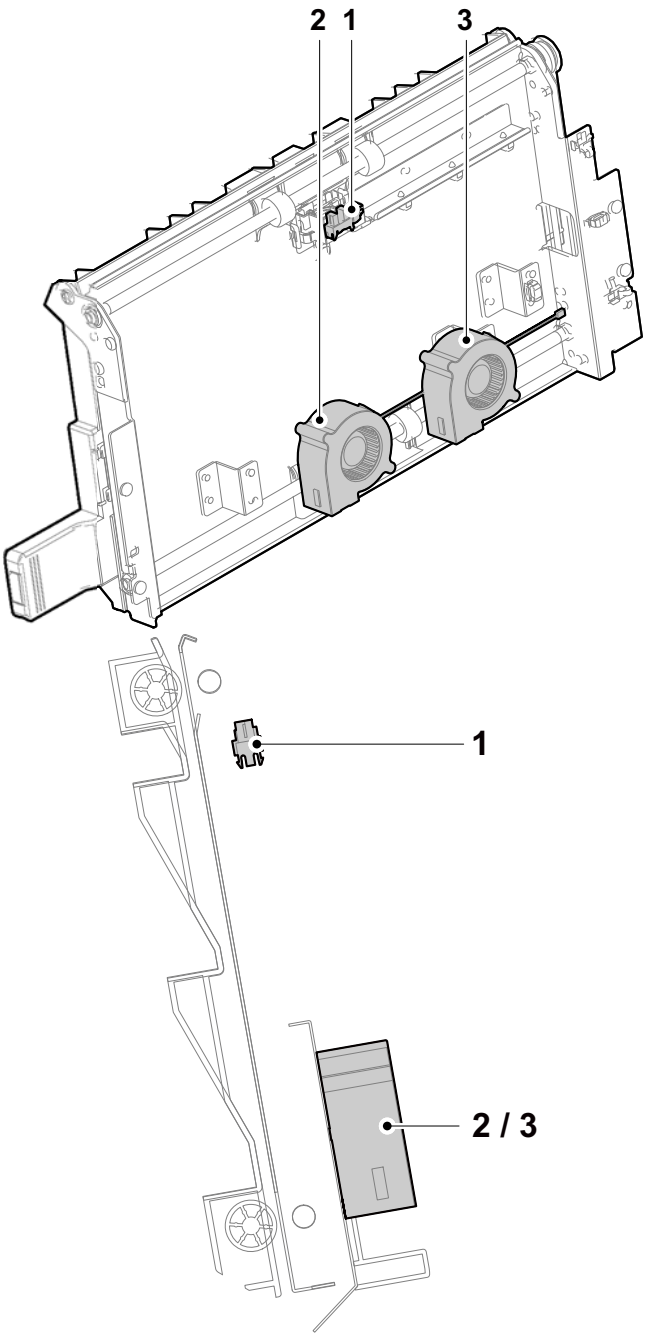

1	BF vertical conveying sensor	Detecting paper on the BF bridge section.
2	BF front enter fan	Blow paper that enter to folding unit.
3	BF rear enter fan	Blow paper that enter to folding unit.

(17-6)Part name table

Name used in service manual	Name used in parts list	Part. No.
1 BF vertical conveying sensor	PARTS SENSOR OPT. SP	303M89426*
2 BF front enter fan	PARTS FAN COOLING LSU 60 SP	302LC9438*
3 BF rear enter fan	PARTS FAN COOLING LSU 60 SP	302LC9438*

(18)Inserter (IS-7100)

(18-1)Sensor,switch

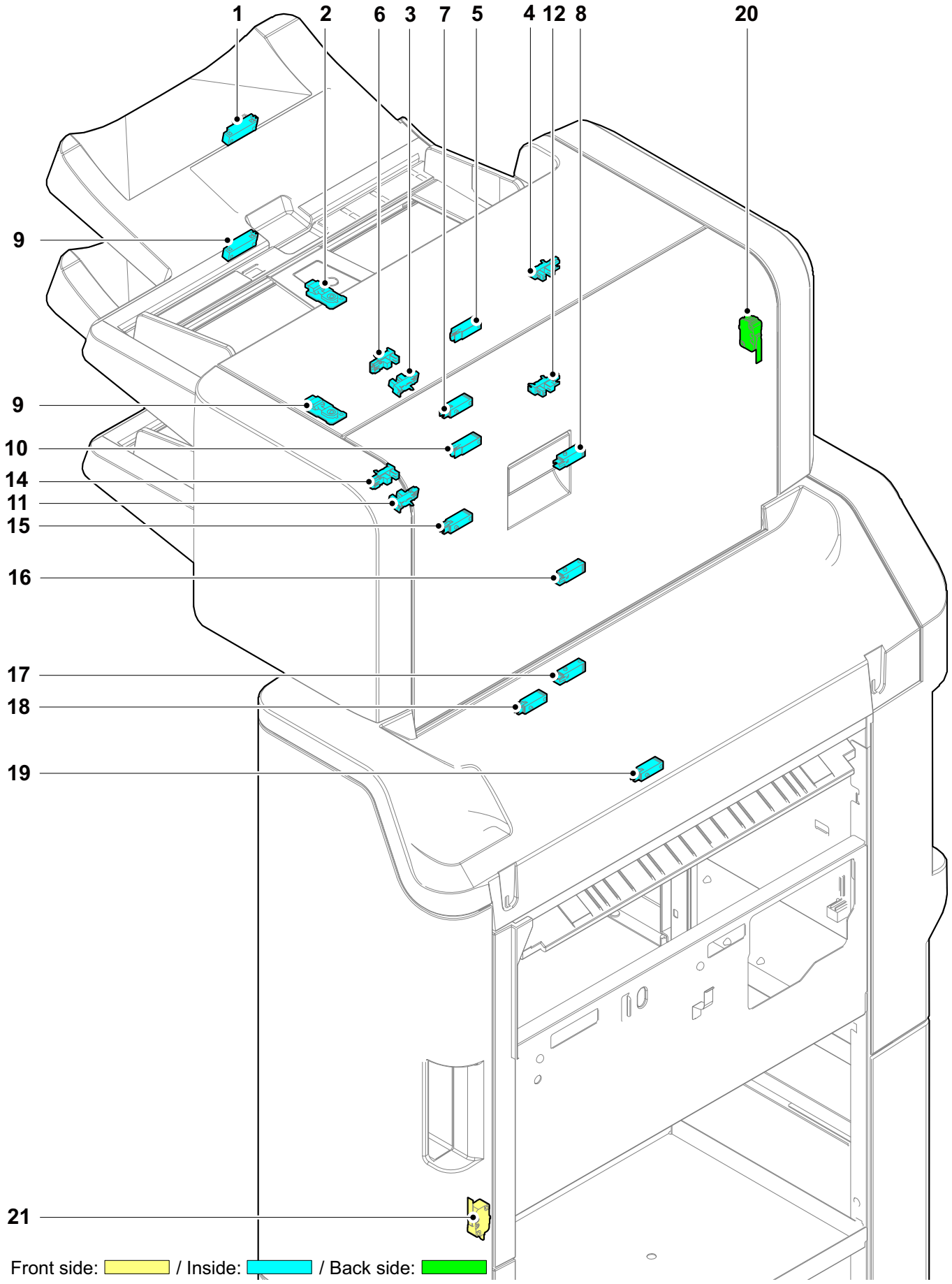

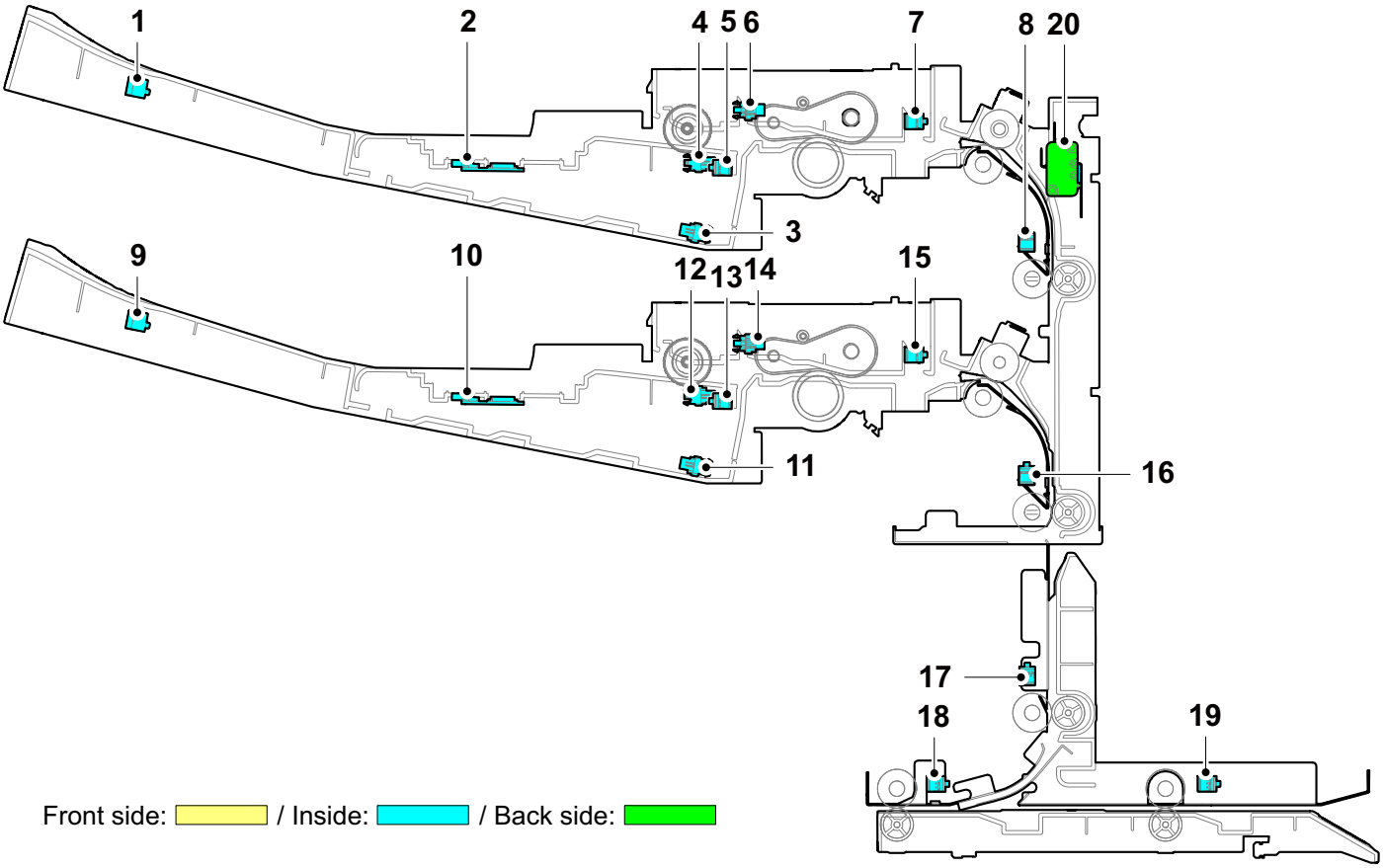

1	IS upper tray paper length sensor	Detecting the paper length on the IS upper tray.
2	IS upper tray paper width sensor	Detecting the paper width on the IS upper tray.
3	IS upper tray lower limit sensor	Detecting the lower limit of bottom plate in the IS upper tray.
4	IS upper tray paper gauge sensor	Detecting the remaining amount of the paper on the IS upper tray.
5	IS upper tray paper sensor	Detecting the paper on the IS upper tray.
6	IS upper tray pickup sensor	Detecting the paper feeding position of bottom plate in the IS upper tray.
7	IS upper tray paper feed sensor	Detecting the primary feed timing feeding from the IS upper tray.
8	IS upper tray registration sensor	Detecting the registration timing feeding from IS upper tray.
9	IS lower tray paper length sensor	Detecting the paper length on the IS lower tray.
10	IS lower tray paper width sensor	Detecting the paper width on the IS lower tray.
11	IS lower tray lower limit sensor	Detecting the lower limit of bottom plate in the IS lower tray.
12	IS lower tray paper gauge sensor	Detecting the remaining amount of the paper on the IS lower tray.
13	IS lower tray paper sensor	Detecting the paper on the IS lower tray.
14	IS lower tray pickup sensor	Detecting the paper feeding position of bottom plate in the IS lower tray.
15	IS lower tray paper feed sensor	Detecting the primary feed timing feeding from the IS lower tray.
16	IS lower tray registration sensor	Detecting the registration timing feeding from IS lower tray.
17	IS confluence conveying sensor	Detecting the paper in the IS confluence conveying section.
18	IS exit sensor	Detecting the paper in the IS exit section.
19	IS entry sensor	Detecting the paper in the IS entry section.

20 IS right cover switch — Detecting the opening and closing of the IS right cover.

21 IS front cover switch — Detecting the opening and closing of the IS front cover.

(18-2)Part name table

Name used in service manual	Name used in parts list	Part. No.
1 IS upper tray paper length sensor	PARTS SENSOR OPT. SP	302P79401_
2 IS upper tray paper width sensor	PARTS PWB PAPER SIZE SENSOR ASSY SP	303R39405_
3 IS upper tray lower limit sensor	PARTS SENSOR OPT. SP	302P79401_
4 IS upper tray paper gauge sensor	PARTS SENSOR OPT. SP	302P79401_
5 IS upper tray paper sensor	PARTS SENSOR OPT. SP	303NW9404_
6 IS upper tray pickup sensor	PARTS SENSOR OPT. SP	302P79401_
7 IS upper tray paper feed sensor	PARTS SENSOR OPT. SP	303NW9404_
8 IS upper tray registration sensor	PARTS SENSOR OPT. SP	303NW9404_
9 IS lower tray paper length sensor	PARTS SENSOR OPT. SP	302P79401_
10 IS lower tray paper width sensor	PARTS PWB PAPER SIZE SENSOR ASSY SP	303R39405_
11 IS lower tray lower limit sensor	PARTS SENSOR OPT. SP	302P79401_
12 IS lower tray paper gauge sensor	PARTS SENSOR OPT. SP	302P79401_
13 IS lower tray paper sensor	PARTS SENSOR OPT. SP	303NW9404_
14 IS lower tray pickup sensor	PARTS SENSOR OPT. SP	302P79401_
15 IS lower tray paper feed sensor	PARTS SENSOR OPT. SP	303NW9404_
16 IS lower tray registration sensor	PARTS SENSOR OPT. SP	303NW9404_
17 IS confluence conveying sensor	PARTS SENSOR OPT. SP	303NW9404_
18 IS exit sensor	PARTS SENSOR OPT. SP	303NW9404_
19 IS entry sensor	PARTS SENSOR OPT. SP	303NW9404_
20 IS right cover switch	INTER LOCK SWITCH	2FB2716_
21 IS front cover switch	INTER LOCK SWITCH	2FB2716_

(18-3)PWB,Motor,Fan

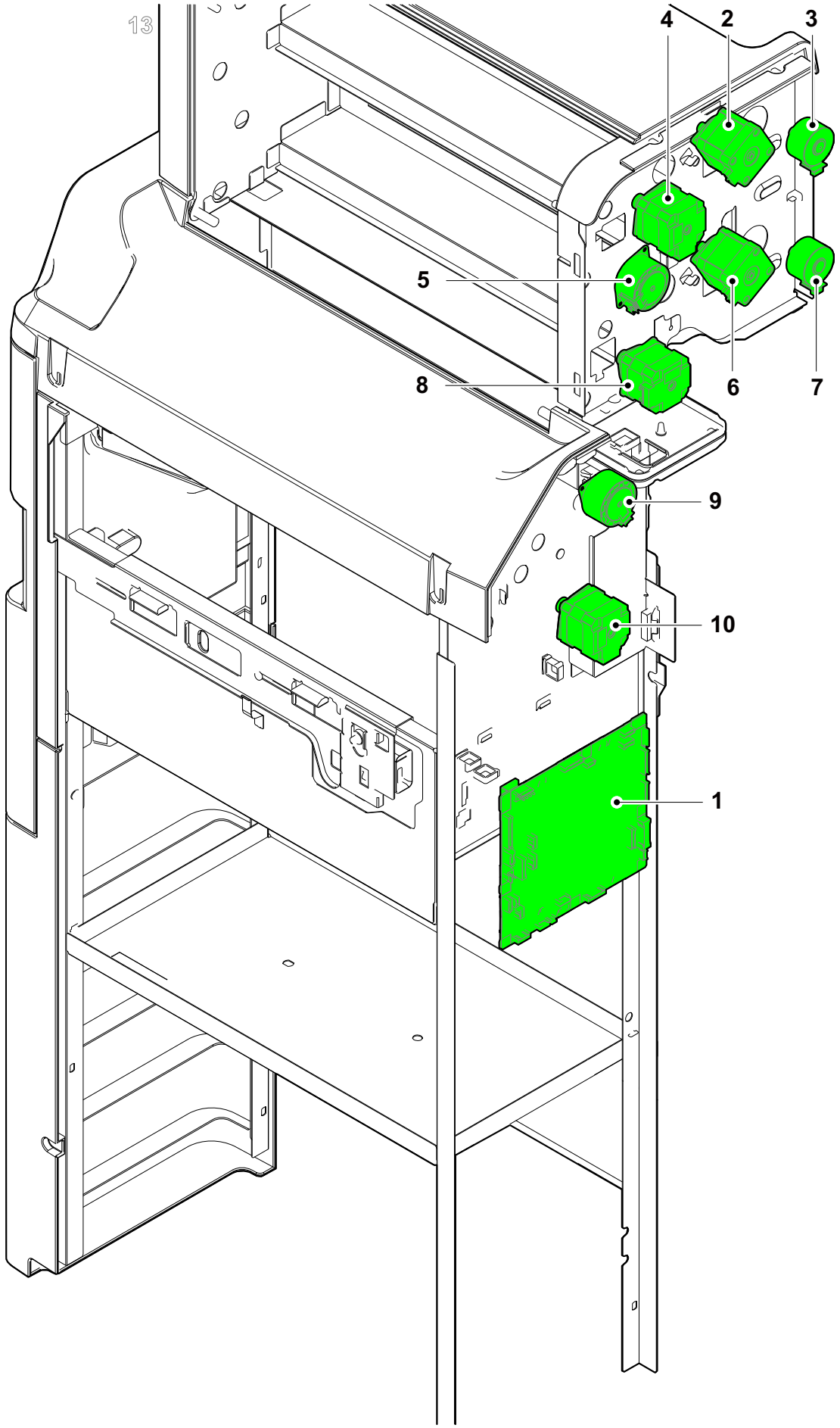

1	IS PWB	Controlling the electric parts in the IS.
2	IS upper tray paper feed motor	Driving the IS upper tray paper feed roller.
3	IS upper tray lift motor	Driving the IS upper tray bottom plate.
4	IS upper tray registration motor	Driving the IS upper tray registration roller.
5	IS conveying motor	Driving the IS upper tray conveying roller and lower tray conveying roller.
6	IS lower tray paper feed motor	Driving the IS lower tray paper feed roller
7	IS lower tray lift motor	Driving the IS lower tray bottom plate.
8	IS lower tray registration motor	Driving the IS lower tray registration roller.
9	IS confluence conveying motor	Driving the IS confluence conveying roller.
10	IS horizontal conveying motor	Driving the IS entry roller and exit roller.

(18-4)Part name table

Name used in service manual	Name used in parts list	Part. No.
1 IS PWB	PARTS PWB INSERTER ASSY SP	303TF9403_
2 IS upper tray paper feed motor	PARTS MOTOR CONVEYING SP	303M49404_
3 IS upper tray lift motor	PARTS MOTOR ROTARY GUIDE SP	302H79431_
4 IS upper tray registration motor	PARTS MOTOR DP SP	303NV9401_
5 IS conveying motor	PARTS MOTOR-PM MOVING SP	303NB9404_
6 IS lower tray paper feed motor	PARTS MOTOR CONVEYING SP	303M49404_
7 IS lower tray lift motor	PARTS MOTOR ROTARY GUIDE SP	302H79431_
8 IS lower tray registration motor	PARTS MOTOR DP SP	303NV9401_
9 IS confluence conveying motor	PARTS MOTOR-PM MOVING SP	303NB9404_
10 IS horizontal conveying motor	PARTS MOTOR DP SP	303NV9401_

(19)Z-folding unit (ZF-7100)

(19-1)PWB

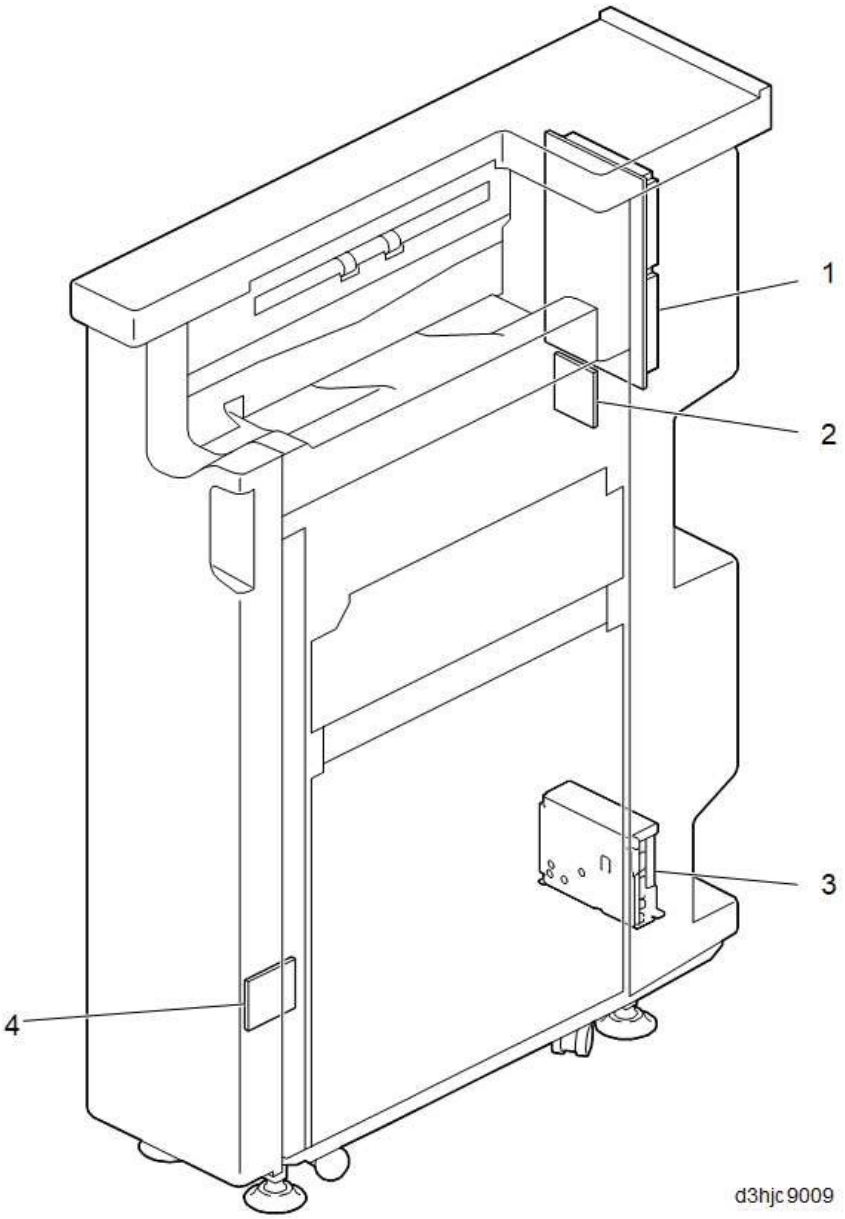

ZF PWB	Controlling the electric parts in the ZF.
ZF IO PWB1	Relay board for the ZF PWB and the device in ZF.
ZF PSU	Rectifying the AC power input to the full-wave and converting it to DC.
ZF IO PWB2	Relay board for the ZF PWB and the device in ZF.

(19-2)Part name table

Name used in service manual	Name used in parts list	Part. No.
1 ZF PWB	PCB:MAIN CONTROL:(PCB2)	305MR7501_
2 ZF IO PWB1	PCB:IOEX:(PCB3/PCB4)	305MR7269_
3 ZF PSU	POWER SUPPLY UNIT:PJA150F-24-JR:(PCB1)	305MR7271_
4 ZF IO PWB 2	PCB:IOEX:(PCB3/PCB4)	305MR7269_

(19-3)Sensor

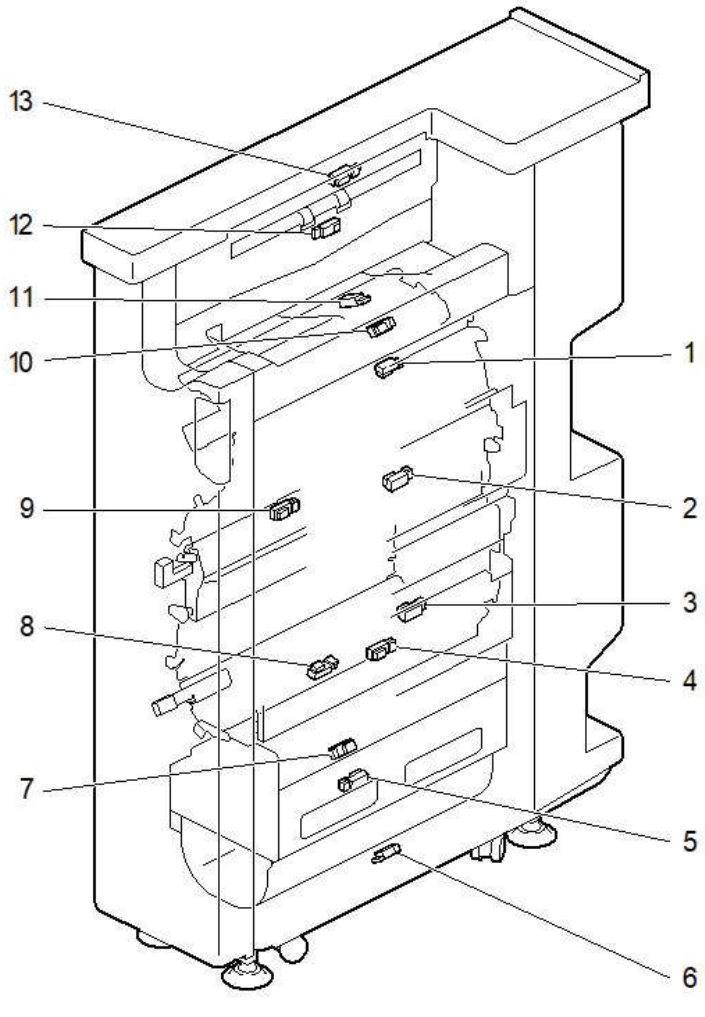

1	Paper Entrance Sensor	Detecting presence of paper in the conveying section.
2	Pre-registration Sensor	Detecting presence of paper in the conveying section.
3	Paper Stack Sensor	Detecting presence of paper in the conveying section.
4	Registration Sensor	Detecting presence of paper in the conveying section.
5	FWD/RVS Sensor 1	Detecting presence of paper in the paper folding section.
6	Purge Paper Sensor	Detecting presence of paper in the paper folding section.(Detecting remained paper)
7	FWD/RVS Sensor 2	Detecting presence of paper in the paper folding section.
8	Folded Paper Sensor	Detecting presence of paper in the conveying section.(Detecting remained paper)
9	Crease Sensor	Detecting presence of paper in the creasing section.
10	Bridge Paper Exit Sensor	Detecting presence of paper in the conveying section.
11	Paper Exit Tray Paper Sensor	Detecting presence of paper the exit section.(Detecting remained paper)
12	Paper Full Sensor	Detecting presence of paper the exit section.(Detecting the paper full)
13	Paper Exit Sensor	Detecting presence of paper the exit section.

(19-4)Part name table

Name used in service manual	Name used in parts list	Part. No.
1 Paper Entrance Sensor	PHOTO REFLECTION SENSOR:EXIT	305J77848_
2 Pre-registration Sensor	PHOTO REFLECTION SENSOR:EXIT	305J77848_
3 Paper Stack Sensor	REFLECTION PHOTO SENSOR:EXIT	305J77848_
4 Registration Sensor	PHOTO REFLECTION SENSOR:EXIT	305J77848_
5 FWD/RVS Sensor 1	REFLECTION PHOTO SENSOR:EXIT	305J77848_
6 Purge Paper Sensor	REFLECTION PHOTO SENSOR:ORIGINAL TRAY	305MR7008_
7 FWD/RVS Sensor 2	REFLECTION PHOTO SENSOR:EXIT	305J77848_
8 Folded Paper Sensor	REFLECTION PHOTO SENSOR:EXIT	305J77848_
9 Crease Sensor	REFLECTION PHOTO SENSOR:EXIT	305J77848_
10 Bridge Paper Exit Sensor	PHOTO REFLECTION SENSOR:EXIT	305J77848_
11 Paper Exit Tray Paper Sensor	REFLECTION PHOTO SENSOR:ORIGINAL TRAY	305MR7008_
12 Paper Full Sensor	REFLECTION PHOTO SENSOR:ORIGINAL TRAY	305MR7008_
13 Paper Exit Sensor	PHOTO REFLECTION SENSOR:EXIT	305J77848_

(19-5)Switch

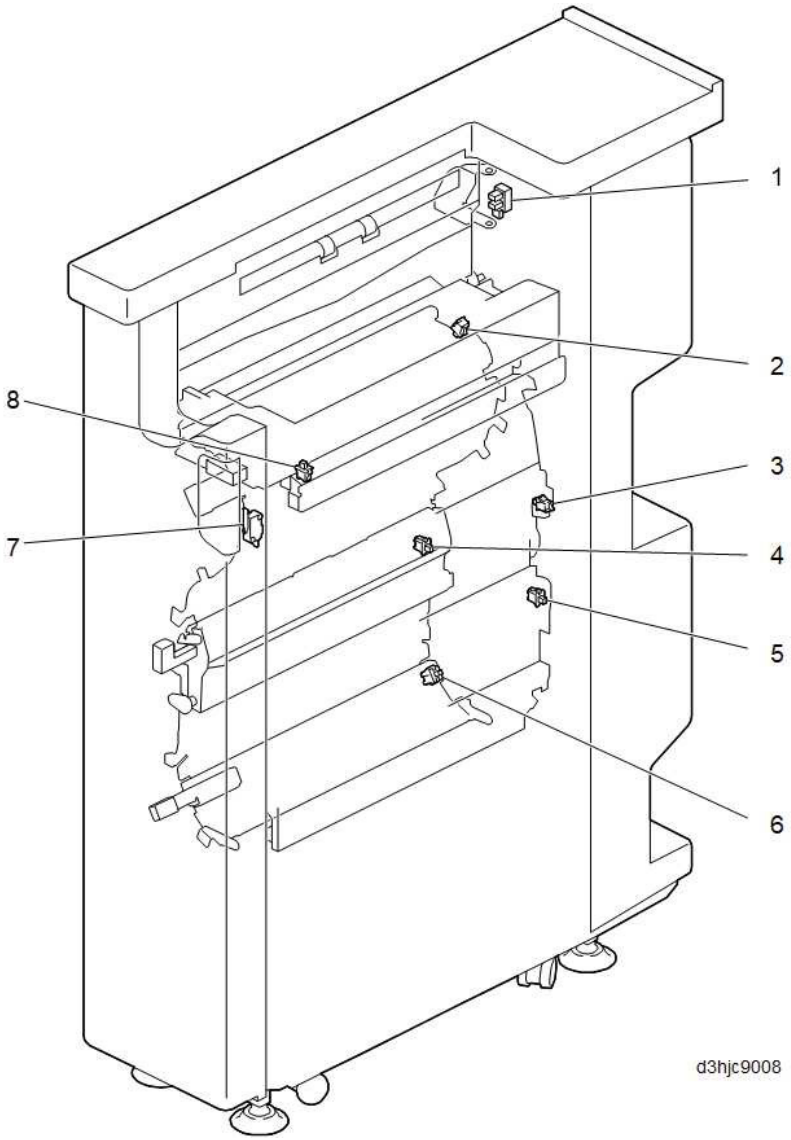

1	Paper Exit Open/Close Sensor	Detecting the guide of exit section open or close.
2	Bridge Open/Close Switch	Detecting the guide of bridge section open or close.
3	Pre-registration Open/Close Switch	Detecting the guide of Pre-registration section open or close.
4	Crease Open/Close Switch	Detecting the guide of creasing section open or close.
5	Registration Open/Close Switch	Detecting the guide of registration section open or close.
6	Folding Open/Close Switch	Detecting the guide of folding section open or close.
7	Interlock Switch	Detecting the guide of paper conveying section open or close.
8	Entrance Open/Close Switch	Detecting the guide of paper entrance section open or close.

(19-6)Part name table

Name used in service manual	Name used in parts list	Part. No.
1 Paper Exit Open/Close Sensor (S17)	PHOTOINTERRUPTOR:LG2A24BL1 G:GF	305MM75PY_
2 Bridge Open/Close Switch (SW3)	PUSH SWITCH:SW1AG-550	305MR7009_
3 Pre-registration Open/Close Switch (SW4)	PUSH SWITCH:SW1AG-550	305MR7009_
4 Crease Open/Close Switch (SW6)	PUSH SWITCH:SW1AG-550	305MR7009_
5 Registration Open/Close Switch (SW5)	PUSH SWITCH:SW1AG-550	305MR7009_
6 Folding Open/Close Switch (SW7)	PUSH SWITCH:SW1AG-550	305MR7009_
7 Interlock Switch (SW1)	MICROSWITCH:D3V-16506-3C25(10E)	305JK7537_
8 Entrance Open/Close Switch (SW2)	PUSH SWITCH:SW1AG-550	305MR7009_

(19-7)Motor

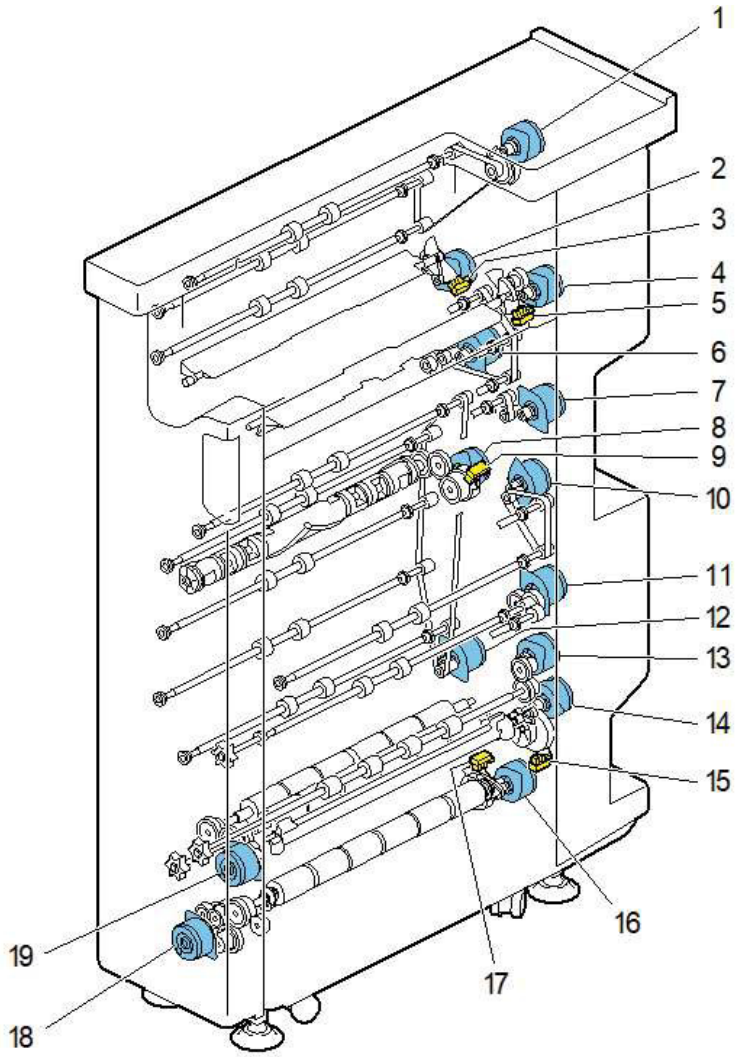

1	Paper Exit Tray Motor	Driving the paper conveying roller.
2	Paper Exit JG Motor	Driving the flap in the branch section.
3	Paper Exit JG HP Sensor	Detecting the home position of the flap.
4	Entrance JG Motor	Driving the flap in the branch section.
5	Entrance JG HP Sensor	Detecting the home position of the flap.
6	Paper Transport Motor 2	Driving the paper conveying roller.
7	Paper Entrance Motor	Driving the paper conveying roller.
8	Crease Motor	Driving the crease motor.
9	Crease HP Sensor	Detecting the home position of the creasing roller.
10	Pre-registration Motor	Driving the paper conveying roller.
11	Paper Stack Motor	Driving the paper conveying roller.
12	Paper Transport Motor 1	Driving the paper conveying roller.
13	Registration Motor	Driving the paper conveying roller.

14 Folding JG Motor	Driving the folding JG motor in the branch section.
15 Folding JG HP Sensor	Detecting the home position of the flap.
16 Anti-winding Motor	Driving the anti-winding in the branch section.
17 Anti-winding HP Sensor	Detecting the home position of the flap.
18 FWD/RVS Motor 2	Driving the paper conveying roller.
19 Folding Motor	Driving the paper conveying roller.

(19-8)Part name table

Name used in service manual	Name used in parts list	Part. No.
1 Paper Exit Tray Motor	DC MOTOR:GEAR:10W	305MM7404_
2 Paper Exit JG Motor	DC MOTOR:ENCODER:NO:7W:GEAR	305MR7010_
3 Paper Exit JG HP Sensor	PHOTOINTERRUPTOR:LG2A24BL1G:GF	305MM75PY_
4 Entrance JG Motor	DC MOTOR:ENCODER:NO:7W:GEAR	305MR7010_
5 Entrance JG HP Sensor	PHOTOINTERRUPTOR:LG2A24BL1G:GF	305MM75PY_
6 Paper Transport Motor 2	DC MOTOR:GEAR:10W	305MM7404_
7 Paper Entrance Motor	DC MOTOR:GEAR:10W	305MM7404_
8 Crease Motor	DC MOTOR:GEAR:10W	305MM7404_
9 Crease HP Sensor	PHOTOINTERRUPTOR:LG2A24BL1G:GF	305MM75PY_
10 Pre-registration Motor	DC MOTOR:GEAR:10W	305MM7404_
11 Paper Stack Motor	DC MOTOR:GEAR:10W	305MM7404_
12 Paper Transport Motor 1	DC MOTOR:GEAR:10W	305MM7404_
13 Registration Motor	DC MOTOR:GEAR:10W	305MM7404_
14 Folding JG Motor	DC MOTOR:ENCODER:NO:7W:GEAR	305MR7010_
15 Folding JG HP Sensor	PHOTOINTERRUPTOR:LG2A24BL1G:GF	305MM75PY_
16 Anti-winding Motor	DC MOTOR:ENCODER:NO:7W:GEAR	305MR7010_
17 Anti-winding HP Sensor	PHOTOINTERRUPTOR:LG2A24BL1G:GF	305MM75PY_
18 FWD/RVS Motor 2	DC MOTOR:GEAR:10W	305MM7404_
19 Folding Motor	DC MOTOR:25W:NMB	305MR7197_

(19-9)LED

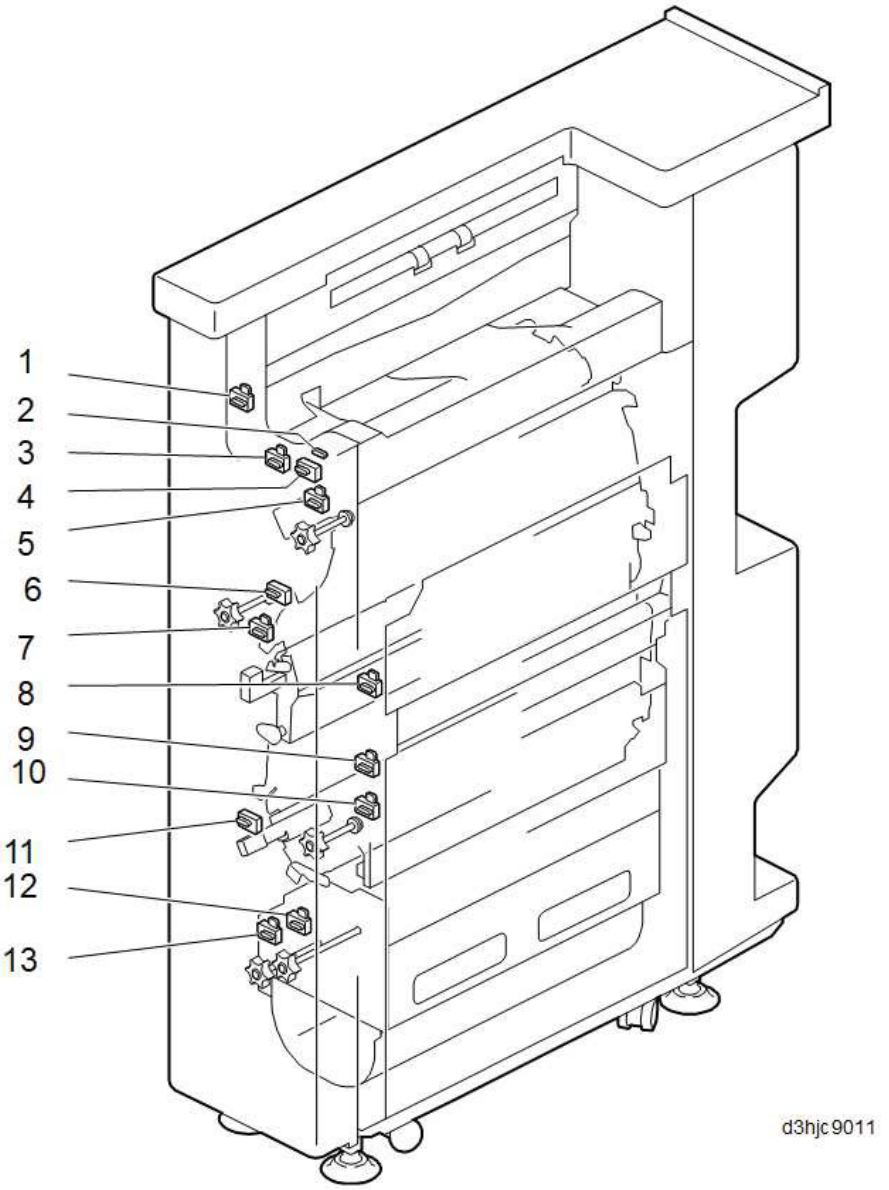

Exit Open/Close LED	Displaying the exit open/close.
Front Door LED	Displaying the front door condition.
Bridge Open/Close LED	Displaying the bridge open/close.
Entrance Open/Close LED	Displaying the entrance open/close.
Entrance Knob LED	Displaying the entrance knob condition.
Transporting Knob LED	Displaying the transporting knob condition.
Crease Open/Close LED	Displaying the crease open/close.
Pre-registration Open/Close LED	Displaying the pre-registration open/close.
Registration Open/Close LED	Displaying the registration open/close.
Stack Knob LED	Displaying the paper stacking knob condition.
Fold Open/Close LED	Displaying the folding section open/close switch condition.
Registration Knob LED	Displaying the registration knob condition.
Fold Knob LED	Displaying the folding knob condition.

(19-10)Part name table

Name used in service manual	Name used in parts list	Part. No.
1 Exit Open/Close LED	PCB:LED:ASS'Y	305MC7163_
2 Front Door LED	LED:RED	305MC7145_
3 Bridge Open/Close LED	PCB:LED:ASS'Y	305MC7163_
4 Entrance Open/Close LED	PCB:LED:ASS'Y	305MC7163_
5 Entrance Knob LED	PCB:LED:ASS'Y	305MC7163_
6 Transporting Knob LED	PCB:LED:ASS'Y	305MC7163_
7 Crease Open/Close LED	PCB:LED:ASS'Y	305MC7163_
8 Pre-registration Open/Close LED	PCB:LED:ASS'Y	305MC7163_
9 Registration Open/Close LED	PCB:LED:ASS'Y	305MC7163_
10 Stack Knob LED	PCB:LED:ASS'Y	305MC7163_
11 Fold Open/Close LED	PCB:LED:ASS'Y	305MC7163_
12 Registration Knob LED	PCB:LED:ASS'Y	305MC7163_
13 Fold Knob LED	PCB:LED:ASS'Y	305MC7163_

3 - 5 Driving system

(1)Drive configuration

(1) Paper feed/conveying drive

Paper feed motor

1 Paper feed roller
2 MP paper feed roller
3 Vertical conveying roller
4 Middle roller
5 registration roller
6 Secondary transfer roller
7 DU conveying roller

(2) Drum K drive

1 Drum motor K

(3) Developer K/Transfer belt drive

Developer K/Transfer belt motor

1 Developer roller K
2 Primary transfer belt drive roller

Belt release motor

1 Transfer belt release

(4) Toner supply drive

1 Toner motor K

(5) Fuser drive

Fuser motor

1 Fuser heat belt

Fuser pressure release motor

1 Fuser pressure release

(6) Container drive

Container motor

1 Toner container

Paper feed/conveying section

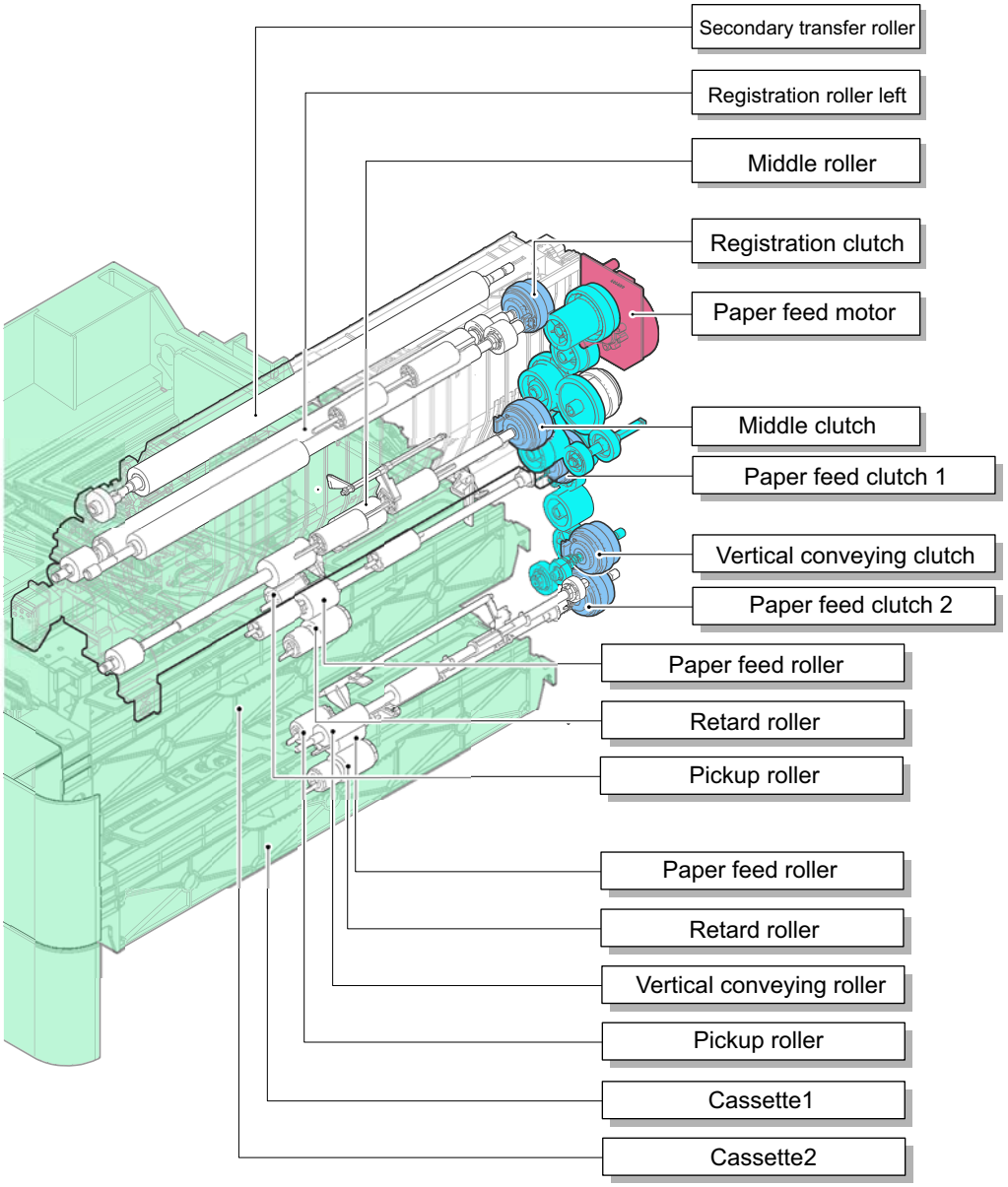

MP drive

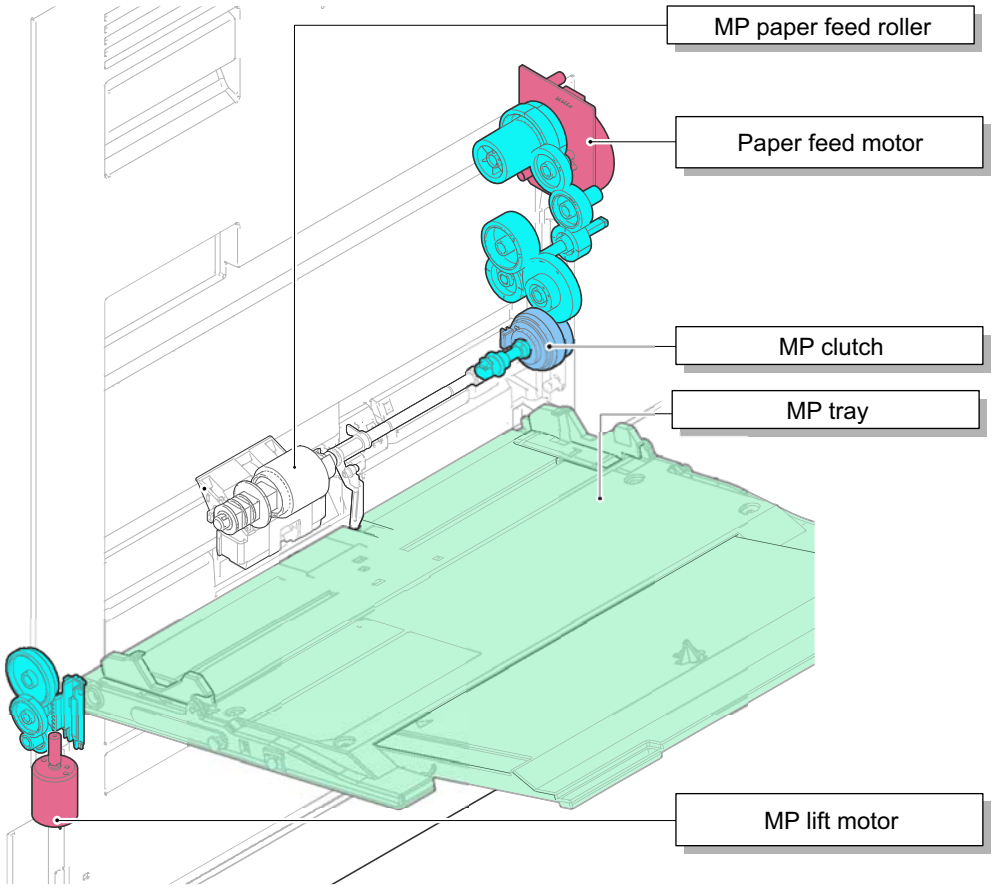

Drum drive

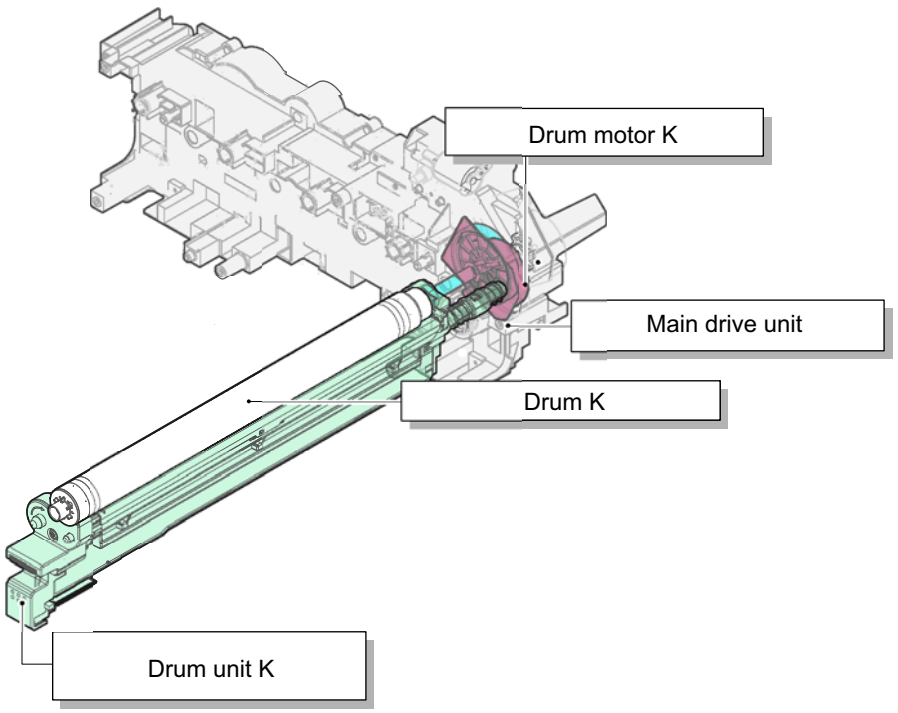

Developer drive

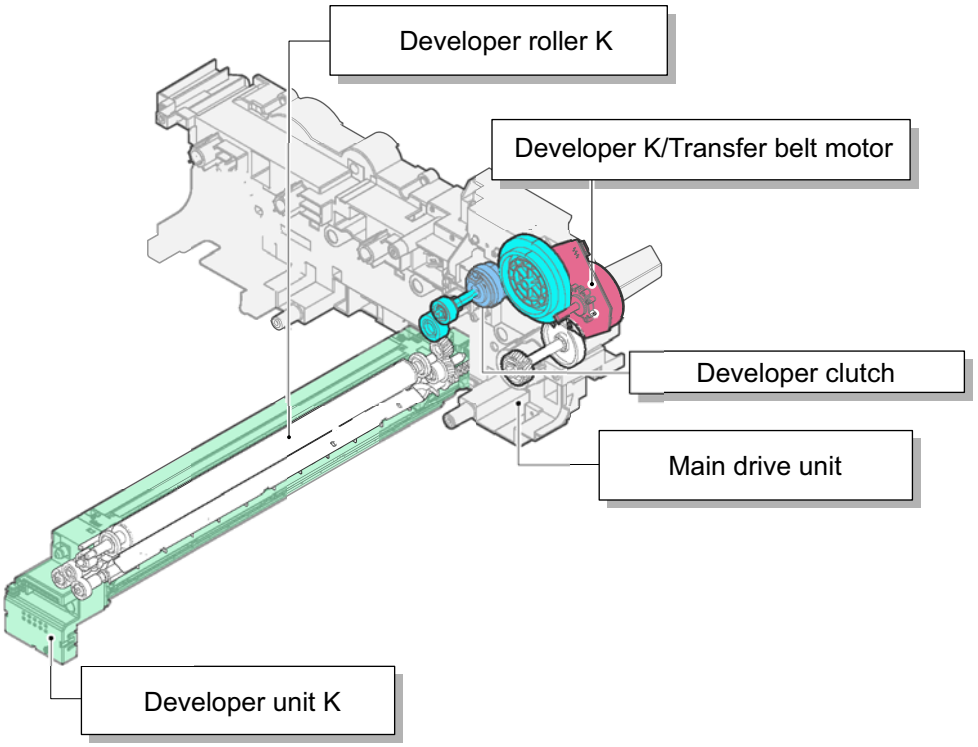

Transfer drive

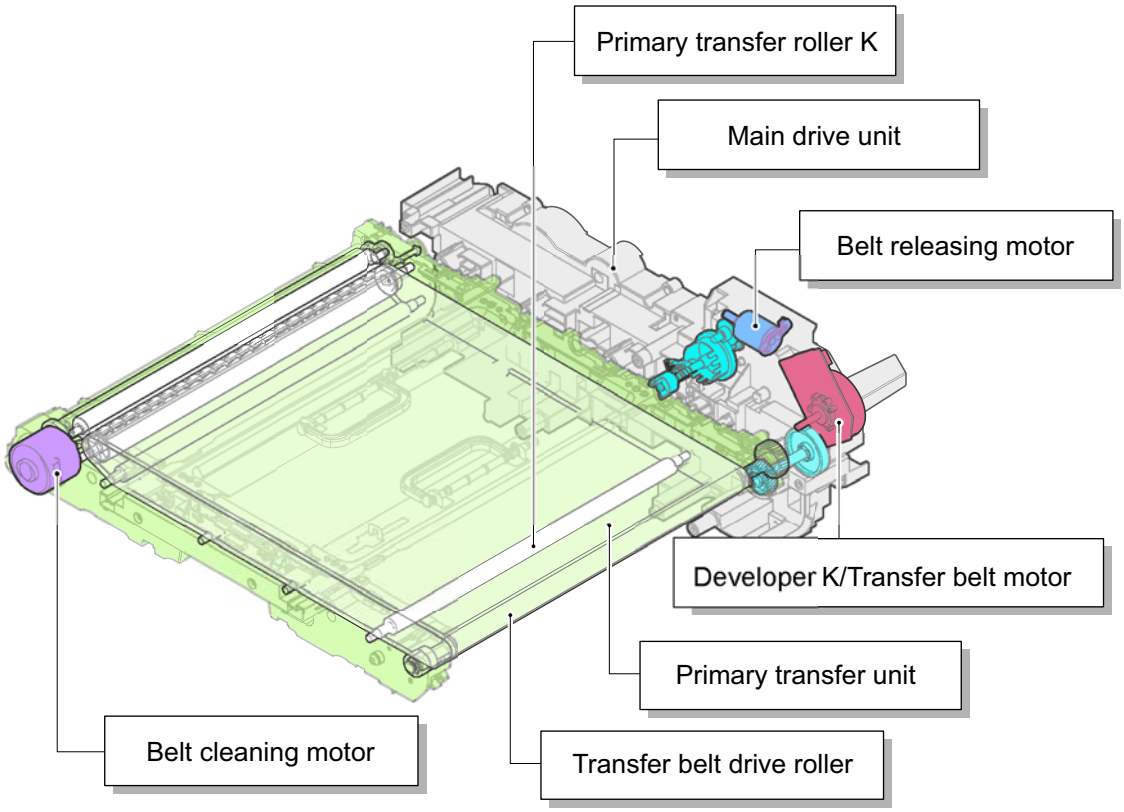

Fuser/Exit/Duplex drive

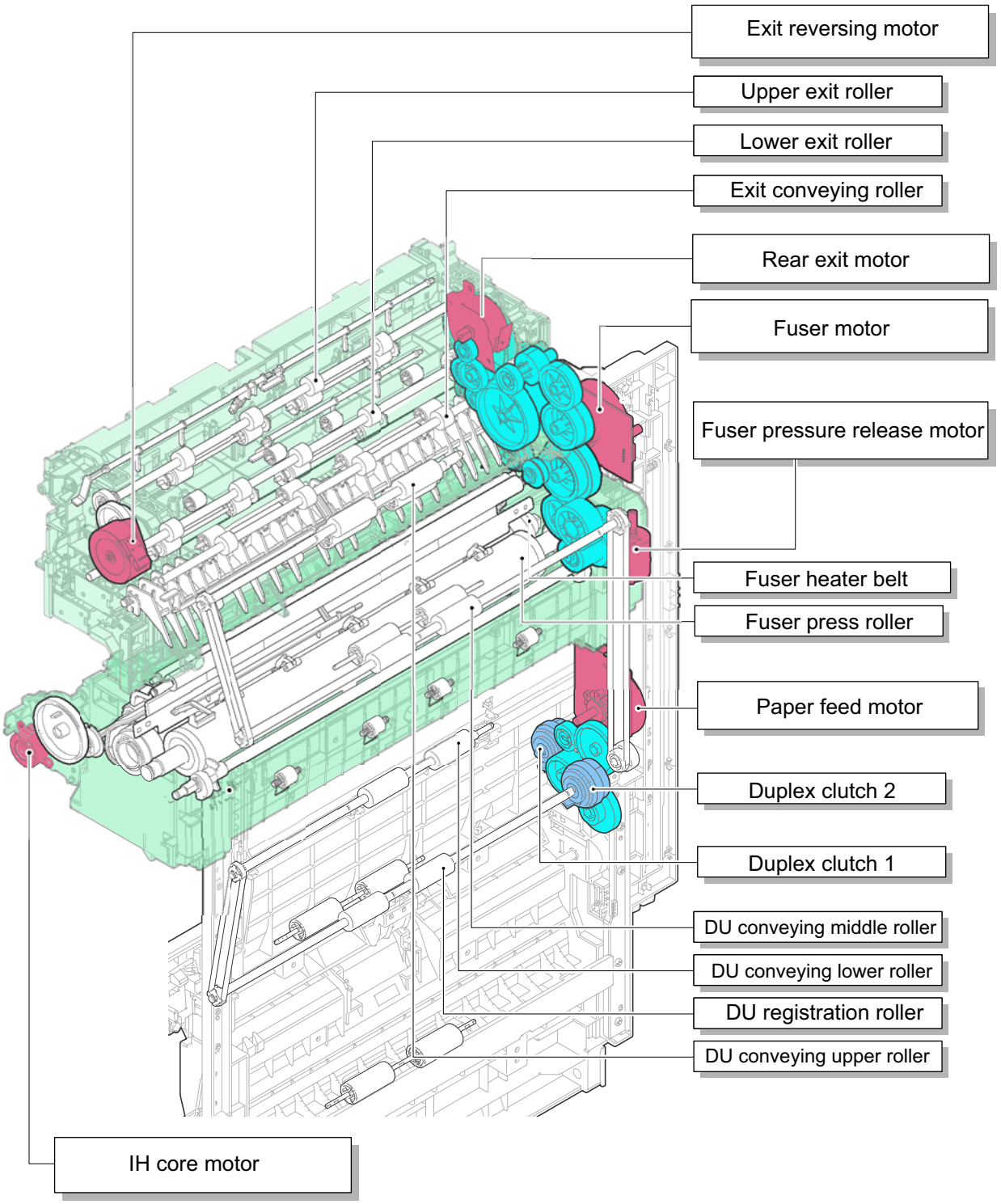

(2)Drive location

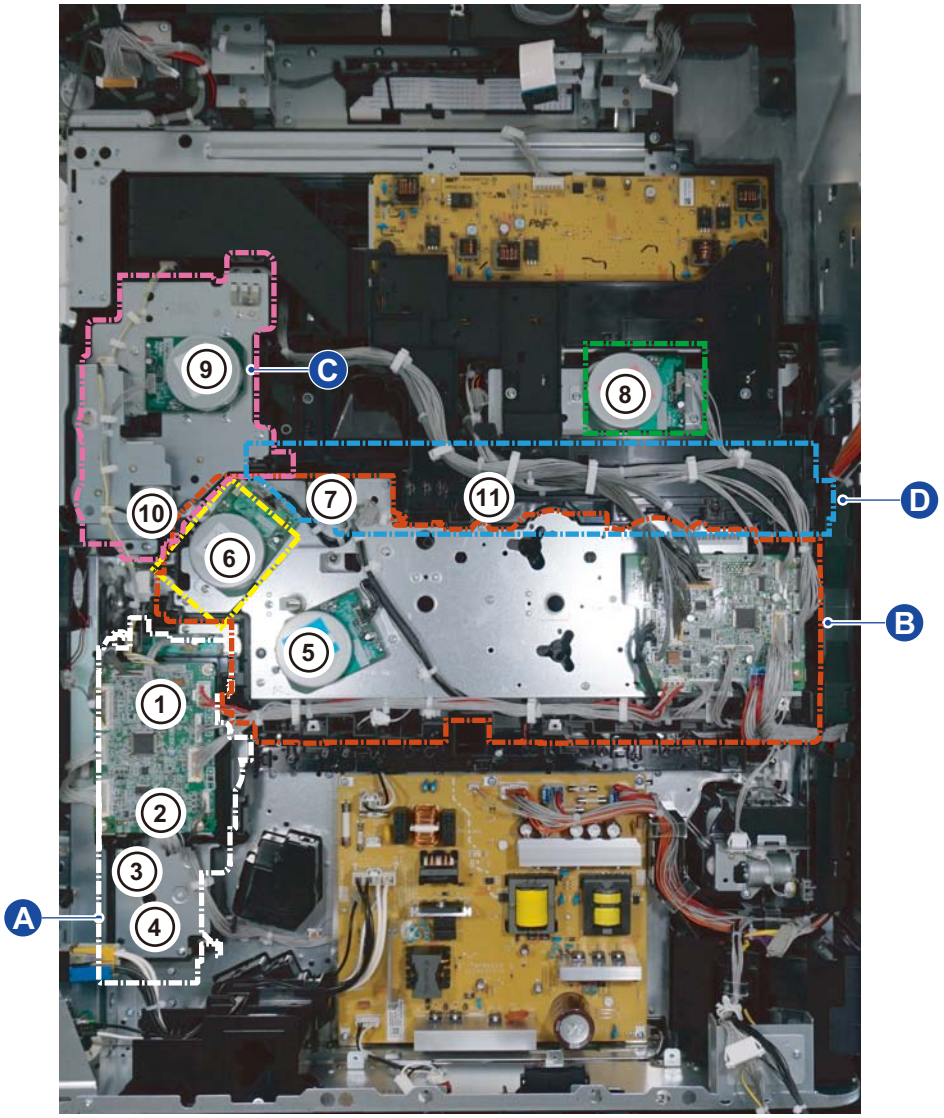

A: Feed drive unit

1 Paper feed motor
2 Paper feed clutch 1
3 Vertical conveying clutch
4 Paper feed clutch 2

B: Main drive unit

5 Drum motor K
6 Developer K/Transfer belt motor
7 Belt release sensor
8 Container motor

C: Fuser drive unit

9 Fuser motor
10 Fuser pressure release motor

D: Toner supply drive unit

11 Toner motor K

(3)Drive unit appearance

(3-1)Feed drive unit

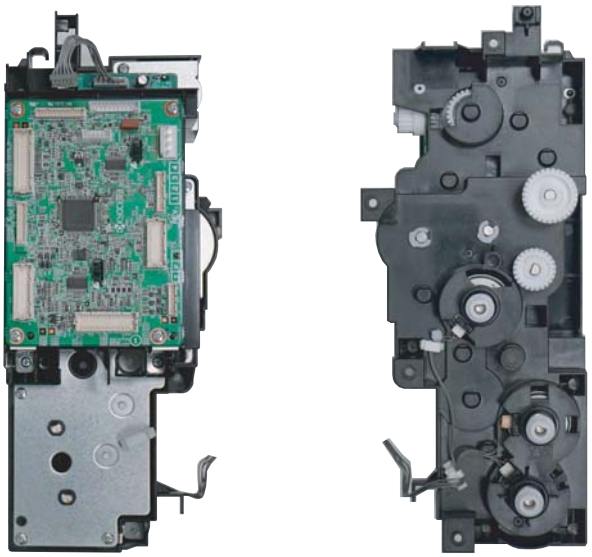

(3-2)Main drive unit

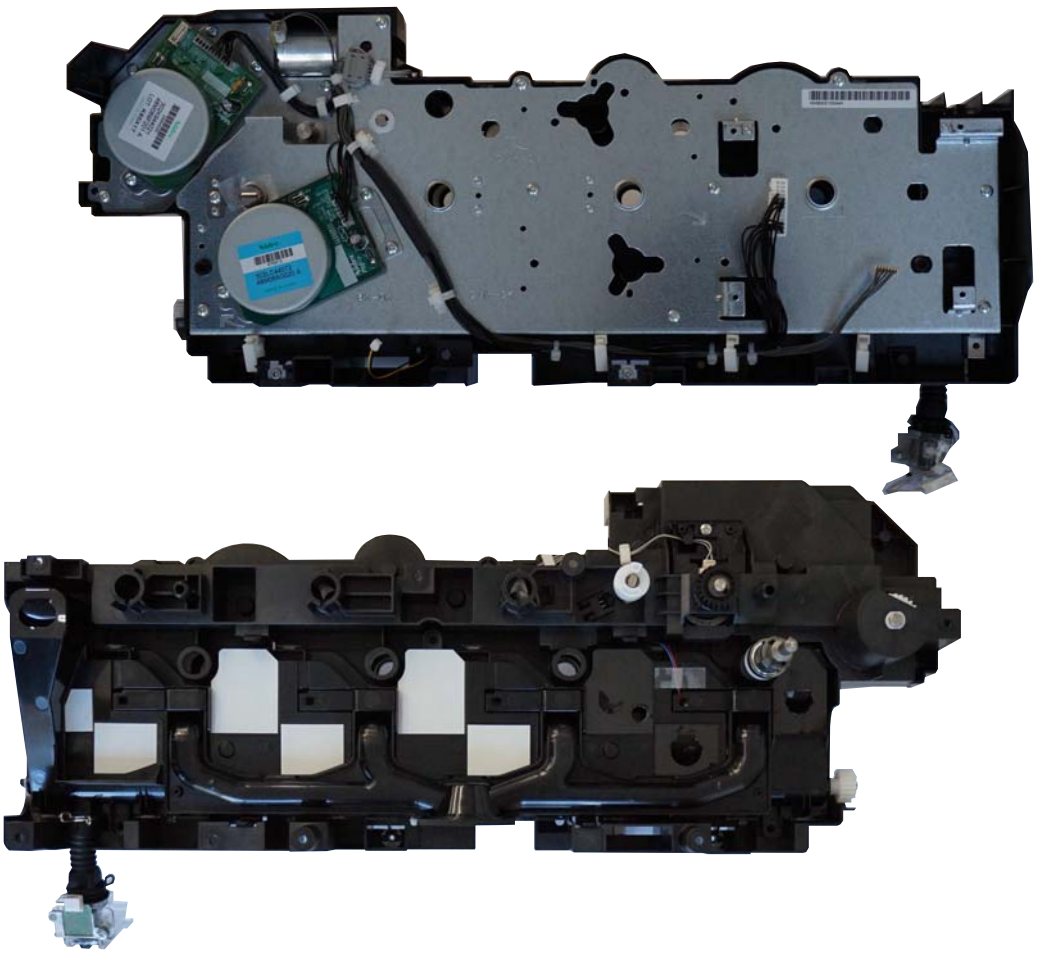

(3-3)Toner supply drive unit

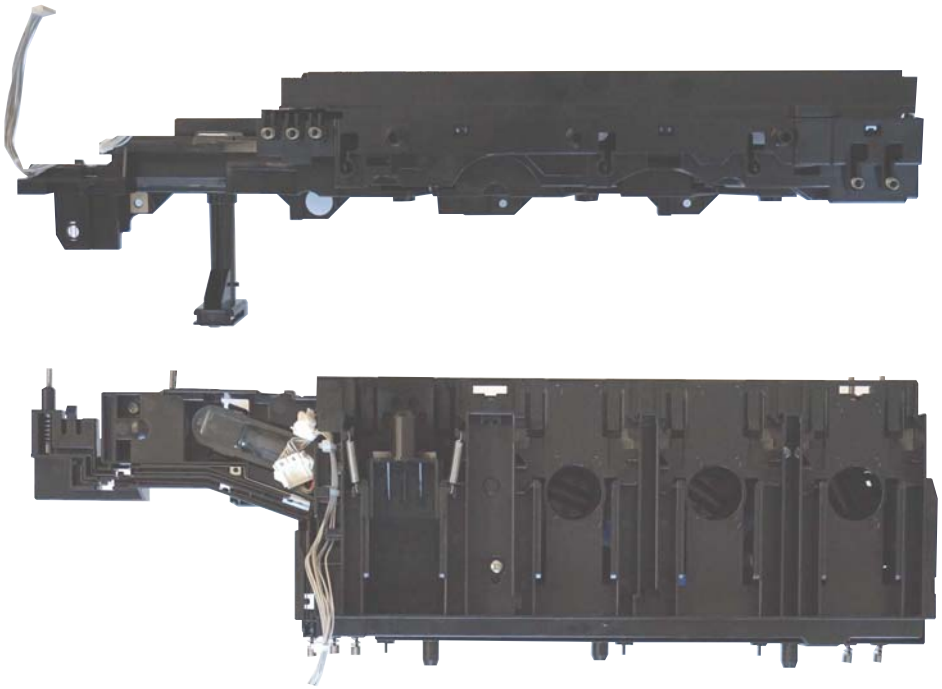

(3-4)Fuser drive unit



3 - 6 Mechanical construction

(1)Paper feed/Conveying section

The paper feed/Conveying section consist of the cassette paper feed section, the MP tray paper feed section, and the paper conveying section where convey the paper to the transfer and separate section.

(1-1)Cassette paper feed section

The cassette can load 550 sheets paper (64 g/m2) or 500 sheets paper (80 g/m2). Feeding from cassette works as picking up paper by rotating the pickup roller and conveys it to the paper conveying section by rotating the paper feed roller. Multi-feeding is also prevented by the effect of the retard roller.

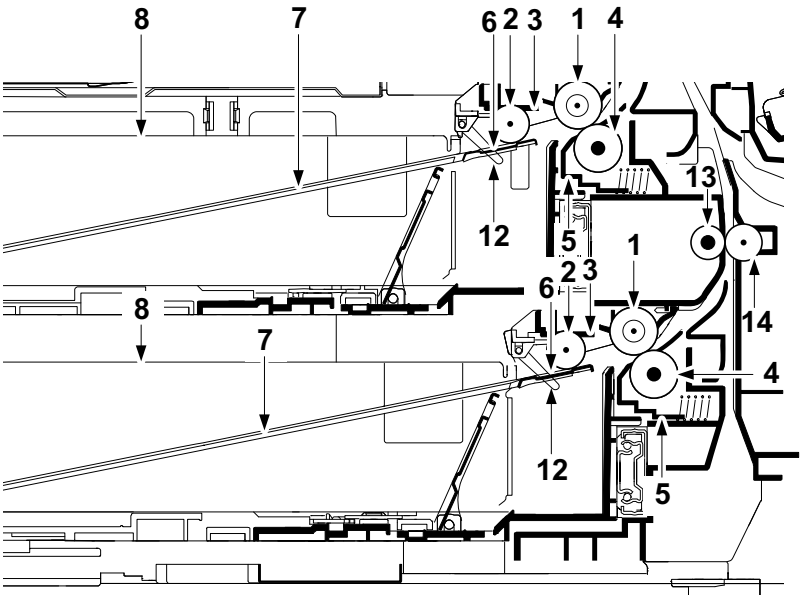

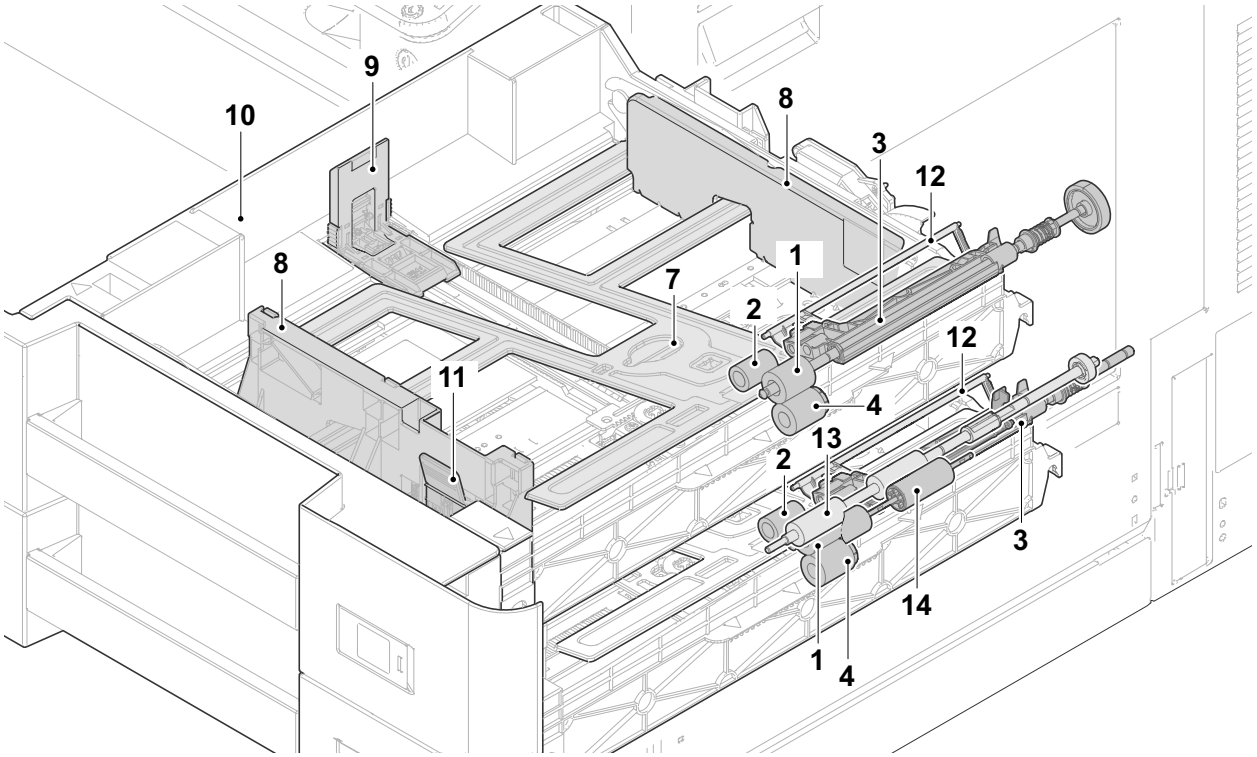

1.	Paper feed roller	6.	Friction pad	11.	Width guide release lever
2.	Pickup roller	7.	Lift plate	12.	Actuator (Paper sensor)
3.	Pickup holder	8.	Paper width guides	13.	Vertical conveying roller
4.	Retard roller	9.	Paper length guide	14.	Vertical conveying pulley
5.	Retard holder	10.	Cassette base		

[Block diagram]

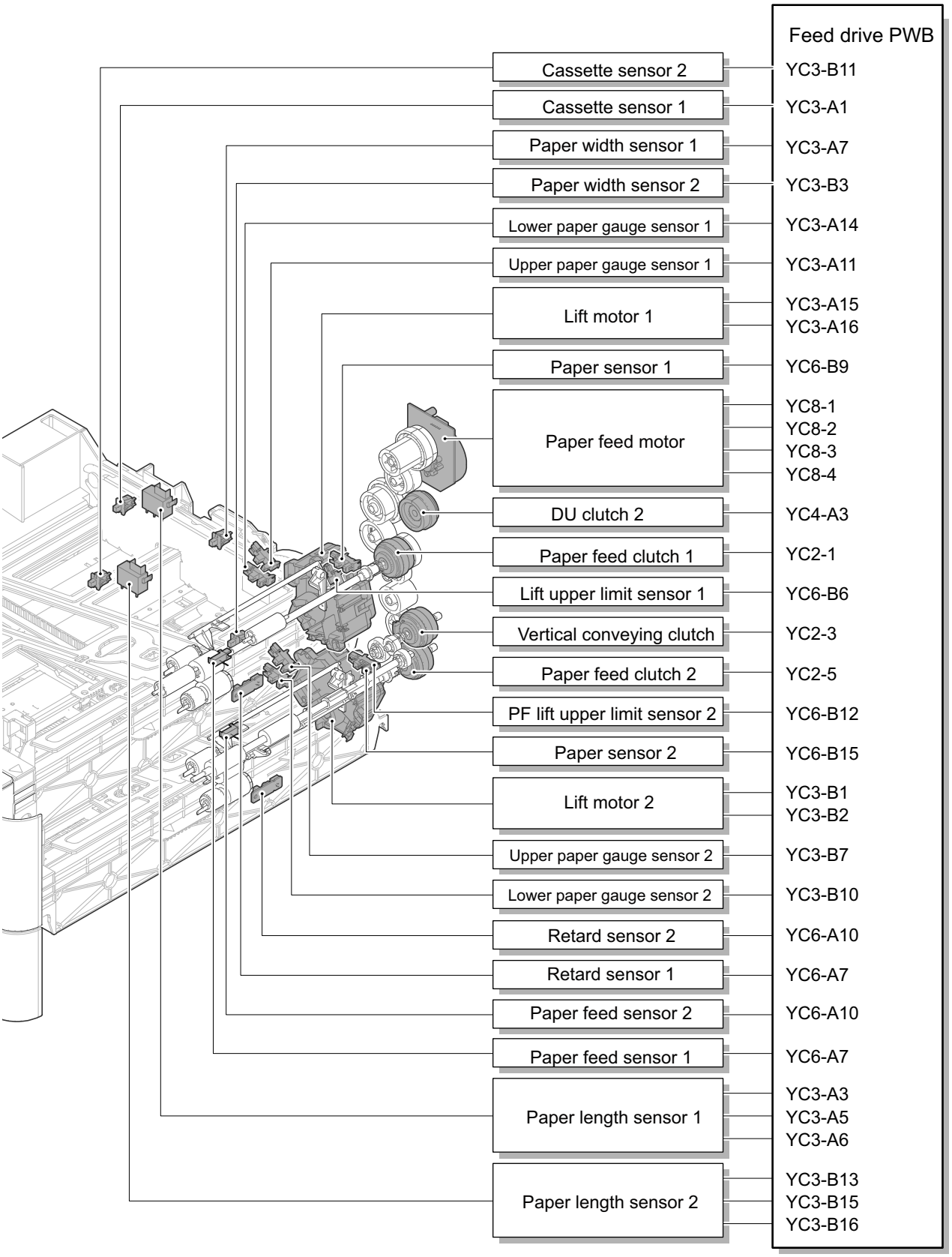

(1-2)MP tray paper feed section

The MP tray can load 150 sheets paper (80 g/m2). The paper on the MP tray is fed by rotating the MP paper feed roller while lifting up the MP bottom plate by the MP solenoid. Multi-feeding is also prevented by the effect of the MP retard roller.

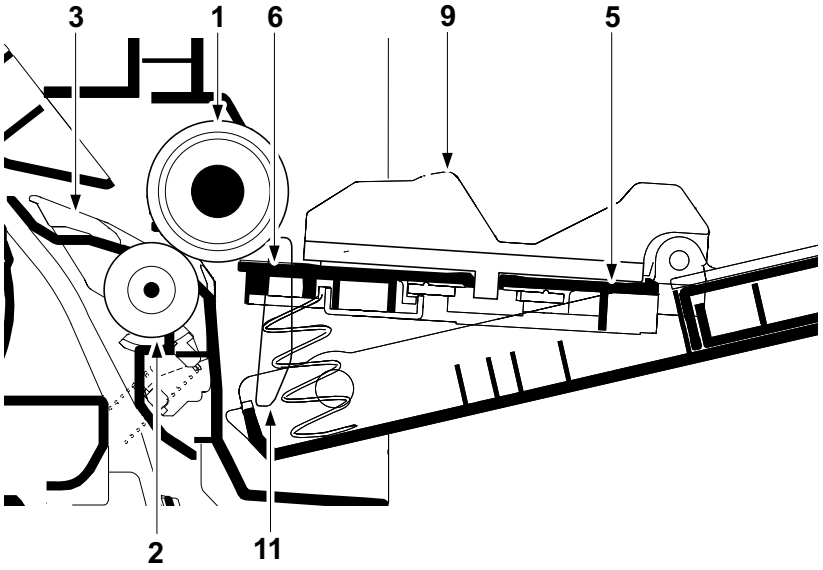

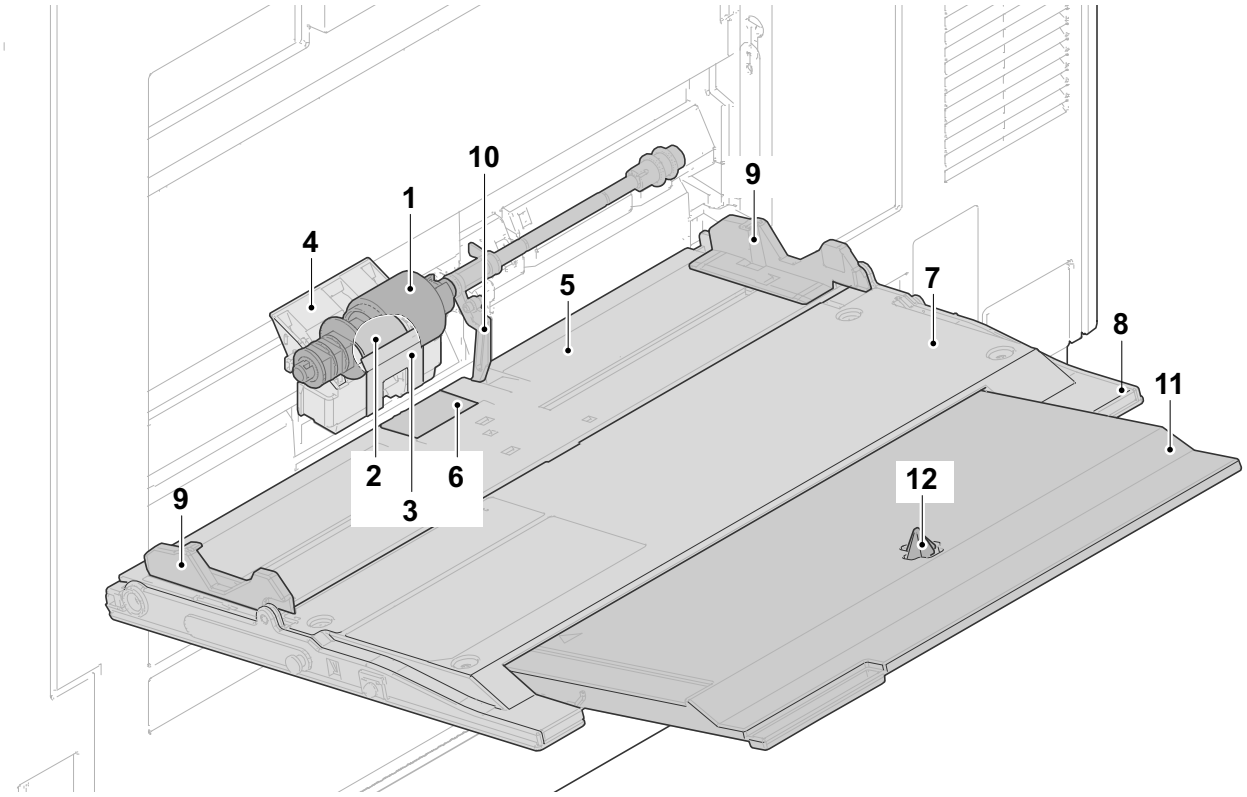

1.	MP paper feed roller	5.	MP lift motor	9.	MP paper width guides
2.	MP retard roller	6.	MP friction pad	10.	Actuator (MP paper sensor)
3.	MP retard guide	7.	MP tray	11.	Sub tray
4.	MP retard holder	8.	MP frame	12.	Actuator (MP paper length sensor)

[Block diagram]

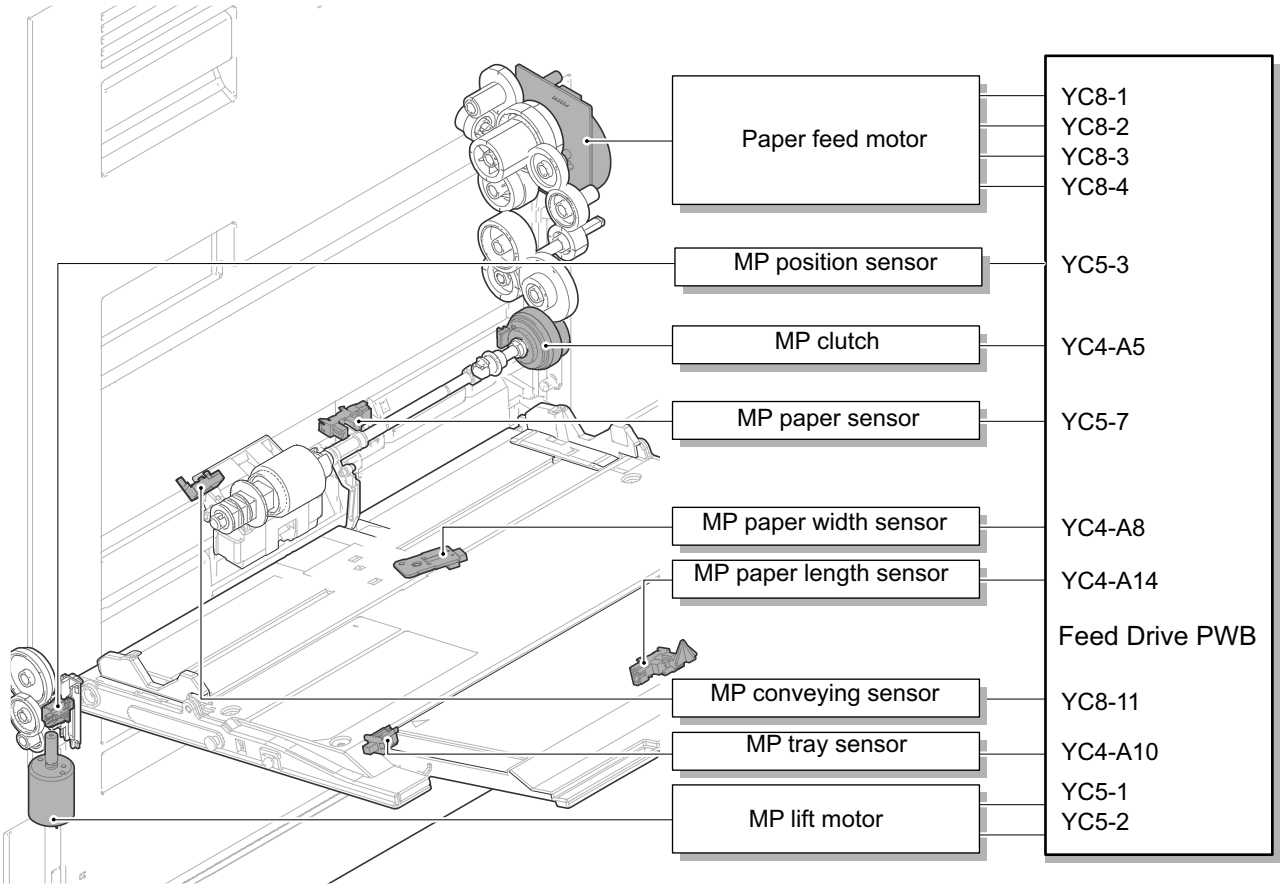

(1-3)Paper conveying section

The paper conveying section conveys paper from the cassette, the MP tray or the duplex section to the transfer and separation section. The paper is carried by the middle roller or the MP conveying roller till paper turns on the registration sensor, and then, conveyed to the transfer and separation section by the registration rollers.

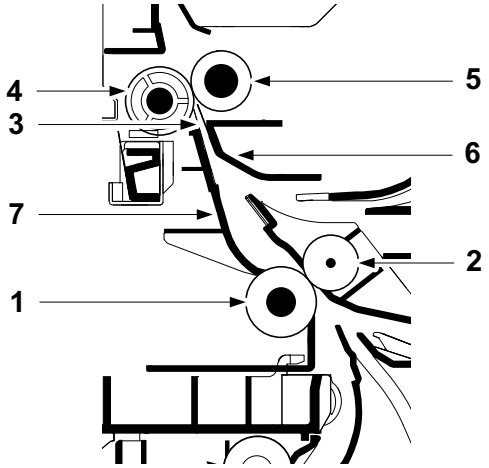

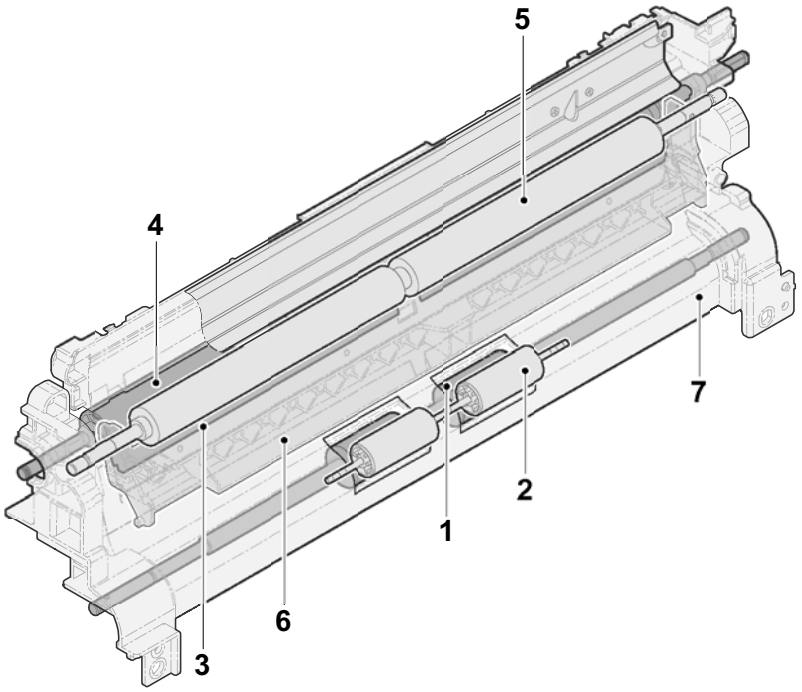

1. Middle roller
2. Middle pulley
3. Registration guide sheet
4. Registration roller left
5. Registration roller right
6. Registration guide
7. Conveying frame

[Block diagram]

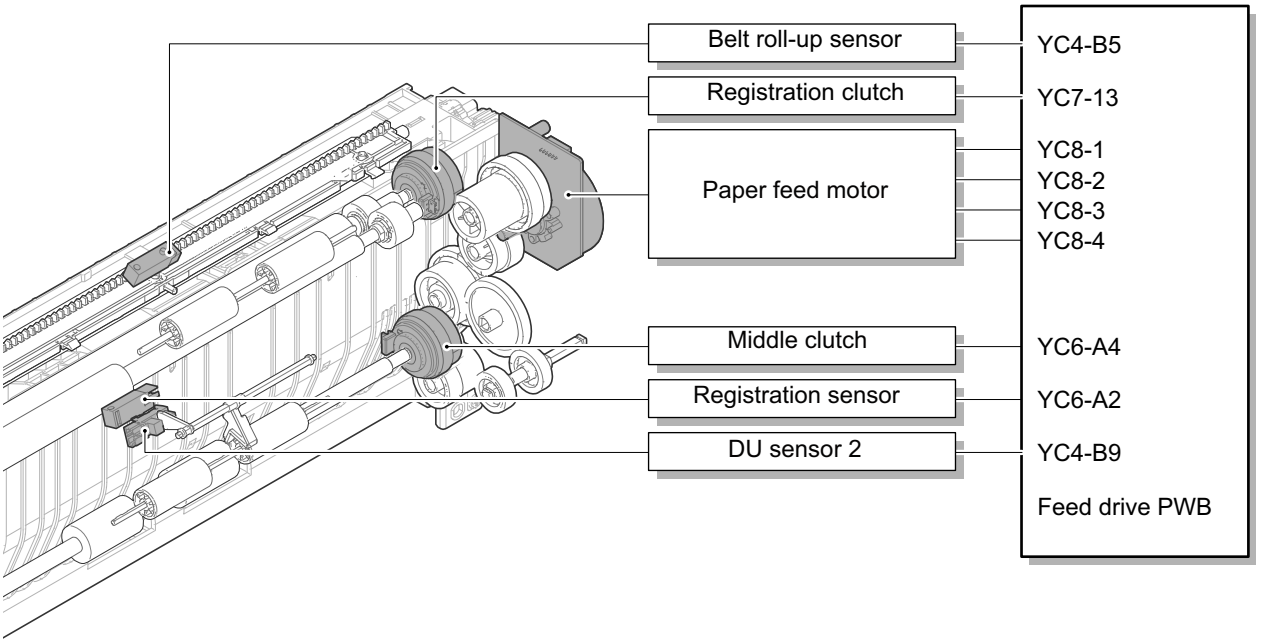

(2)Optical section

The optical section consists of the image scanner section for scanning the original and the laser scanner section to write the image.

(2-1)Image scanner section

Copy original is exposed by the exposure lamp (LED) and reflection light is scanned by the image sensor through three mirrors and the ISU lens, then convert to electric signal.

When using the document processor, the mirror unit A is at the original scanning position (Slit glass) and scans the image on the original that the document processor conveys.

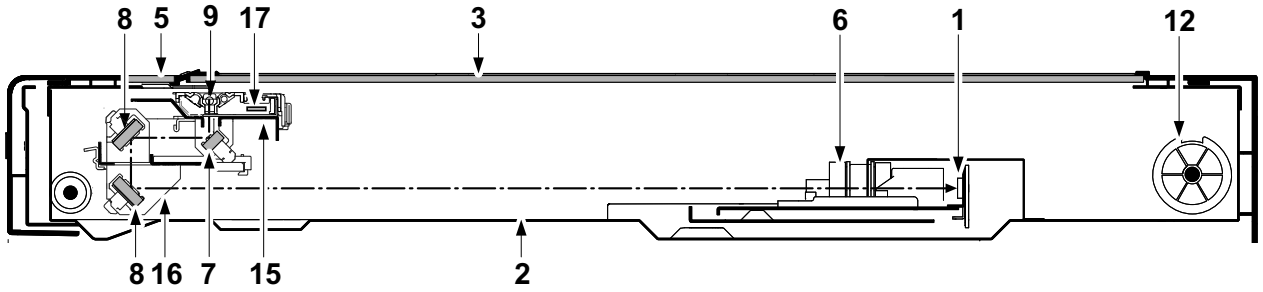

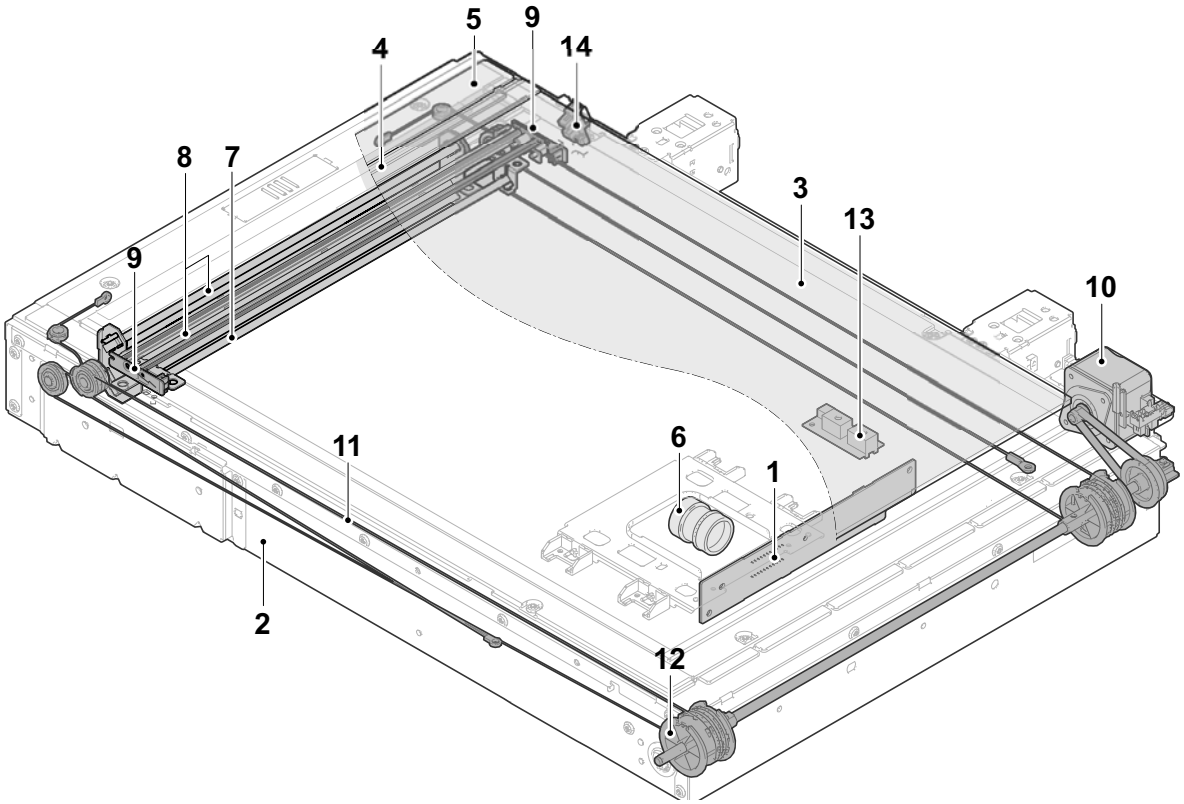

1.	Image sensor	8.	Mirror B	15.	Charger roller unit
2.	Scanner frame	9.	LED lamp	16.	Charger roller unit
3.	Contact glass	10.	Scanner motor	17.	LED drive PWB
4.	Original size indicator	11.	Scanner wire		
5.	Slit glass	12.	Scanner wire drum		
6.	ISU lens	13.	Original size sensor		
7.	Mirror A	14.	Home position sensor		

[Block diagram]

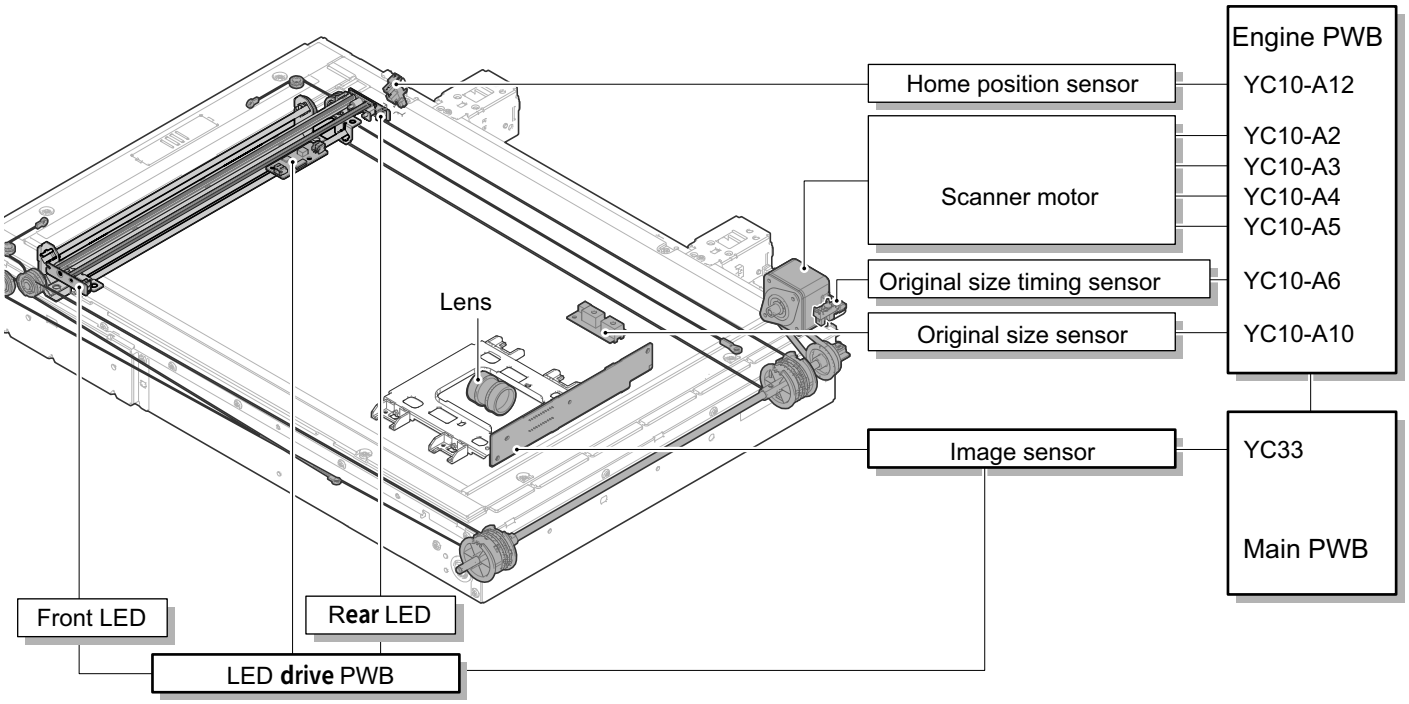

(2-2)Laser scanner unit

The charged drum surface is scanned by the laser from the laser scanner units. Polygon motor drives the polygon mirror and the mirror reflects the laser to scan horizontal image. The laser scanner unit has some lenses and mirrors, that adjust the diameter of the laser to make focus on the drum surface. Also, the LSU cleaning motor operates to automatically clean the LSU seal glass.

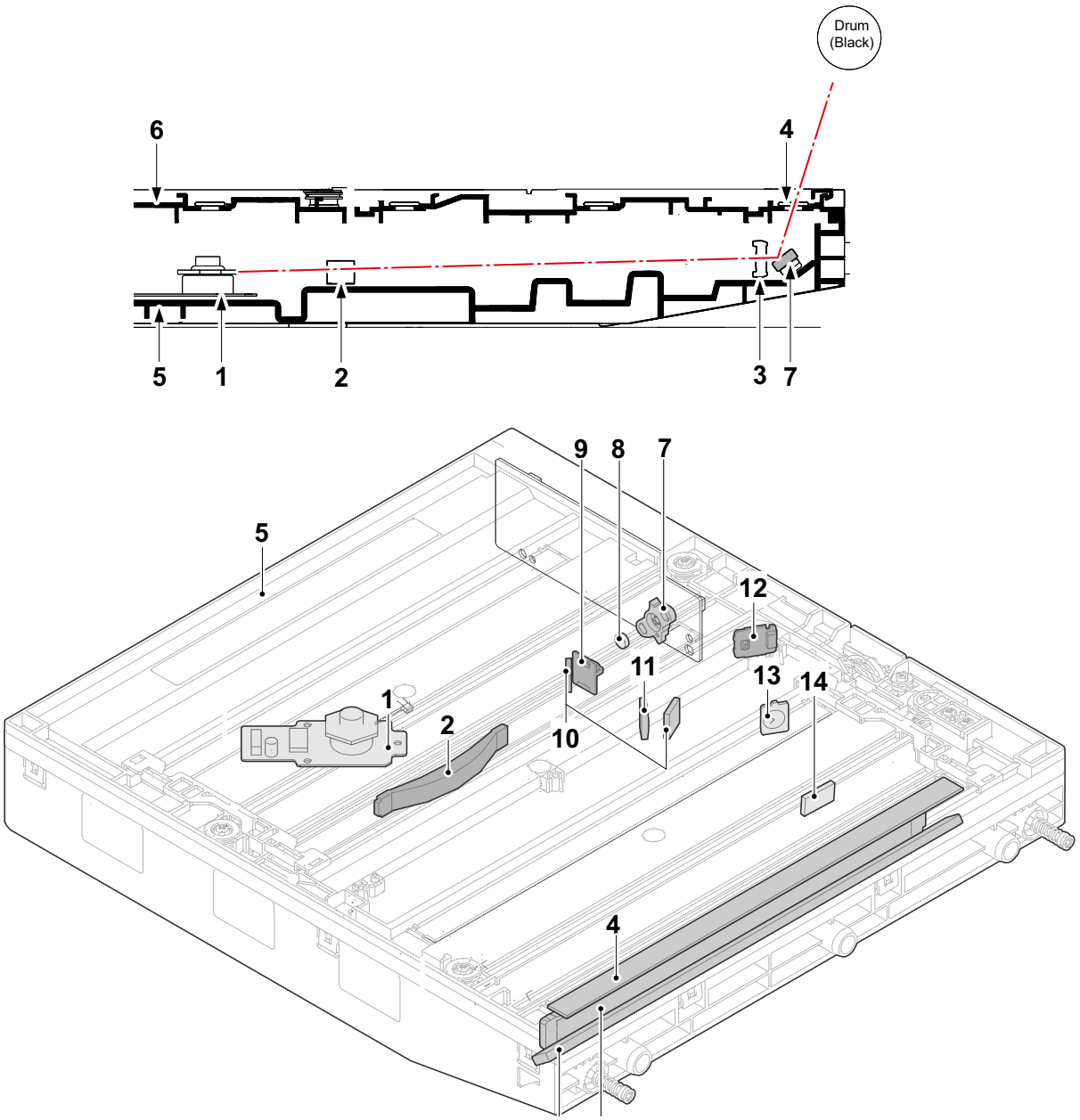

1.	Polygon motor	6.	Mirror	11.	Cylindrical lens
2.	f-theta lens A	7.	Laser emitting diode	12.	PD PWB
3.	f-theta lens B	8.	Collimator lens	13.	PD lens
4.	LSU seal glass	9.	LD slit glass plate	14.	PD mirror
5.	LSU base	10.	LD mirror		

[Block diagram]

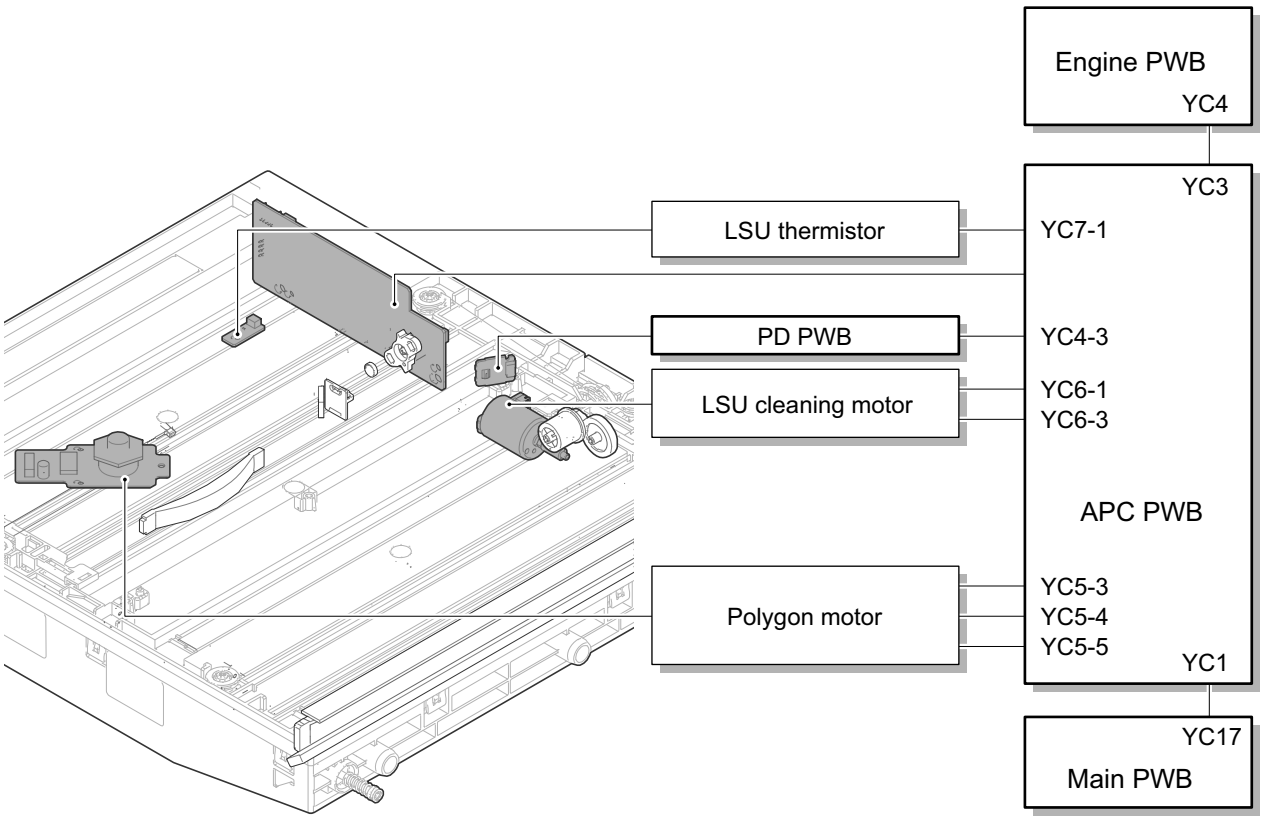

(3)Developer section

(3-1)Developer unit

The developer section consists of magnet roller that forms magnetic brush, developer blade, and the developer screw for toner mixing. Image density is adjusted by impressing the bias to the magnet roller. The toner concentration pf the inside developer unit is detected by the toner sensor.

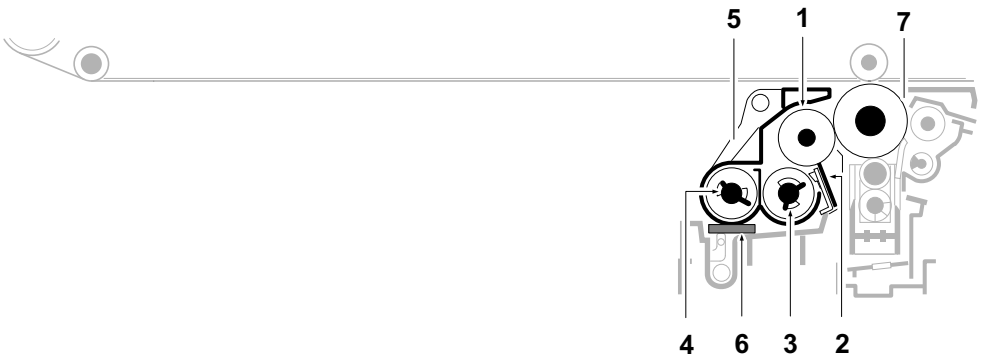

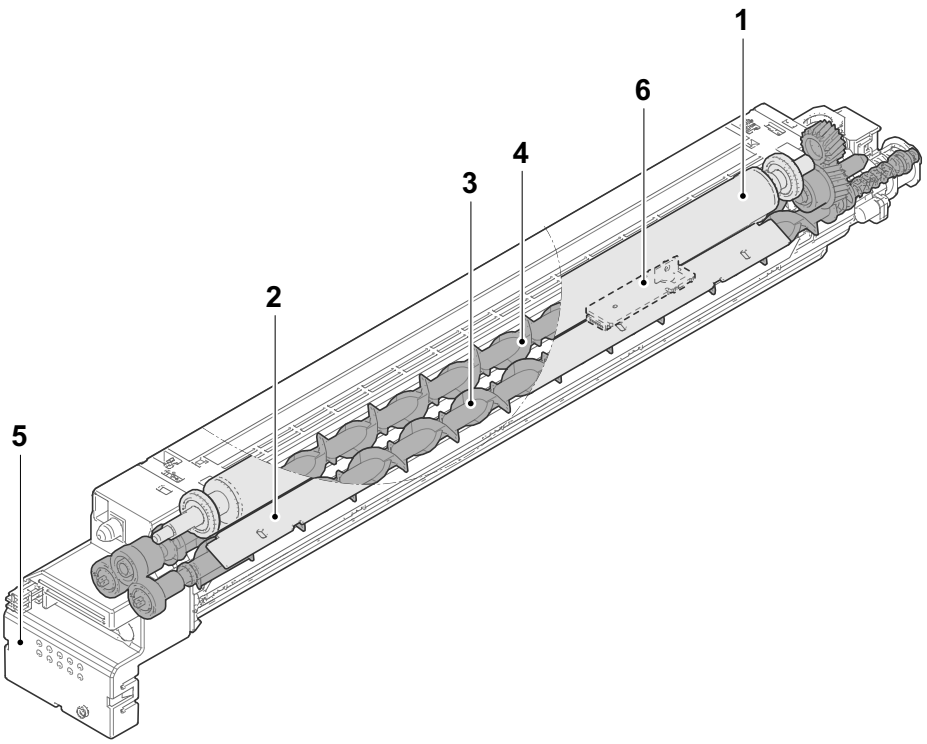

1. Magnet roller
2. Developer blade
3. Developer screw A
4. Developer screw B
5. Developer case
6. Toner sensor
7. Drum

[Block diagram]

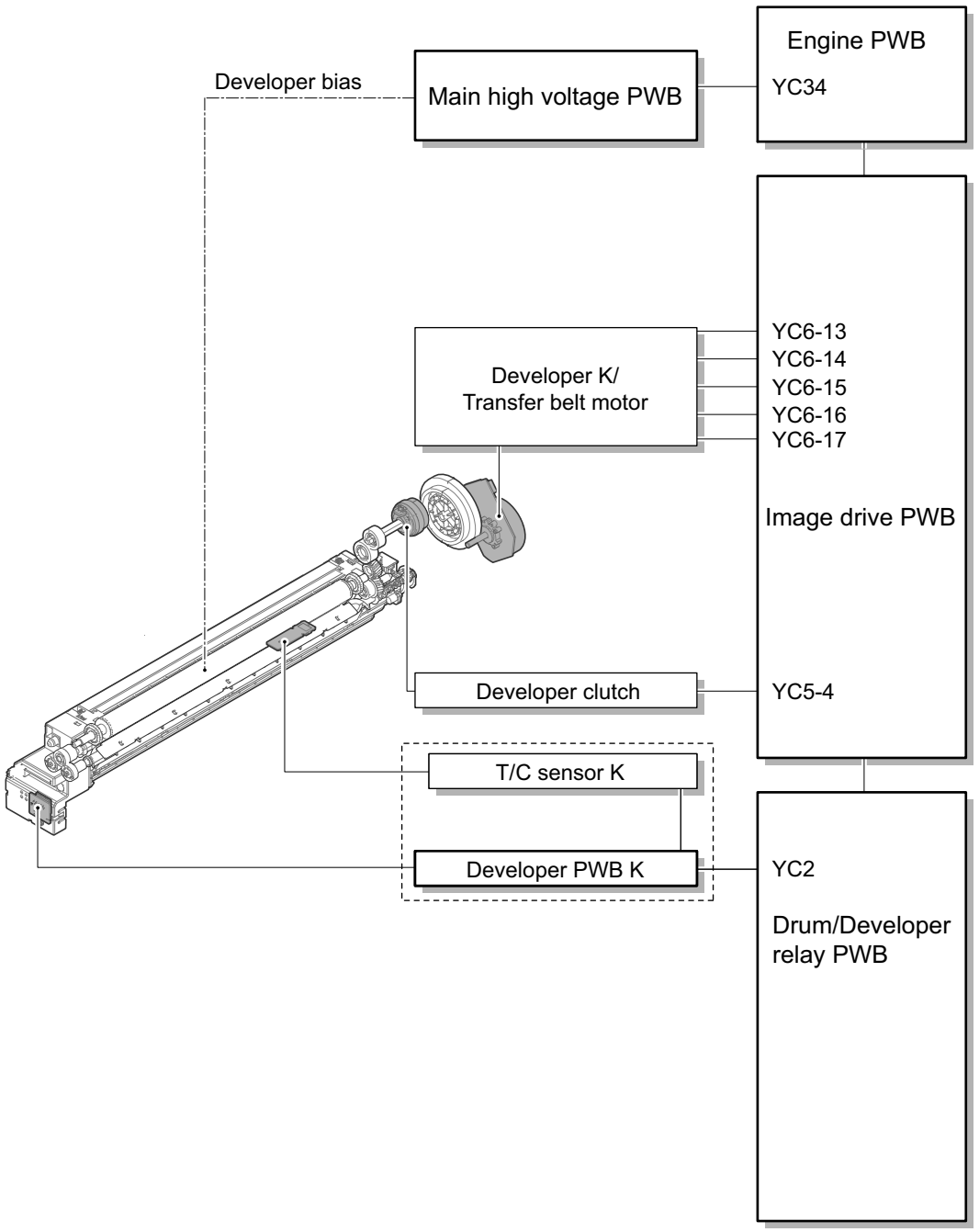

(4)Drum section

The drum section consists of the drum, the charger roller unit, and the cleaning unit. The drum surface is evenly charged to prepare forming the electrical latent image by emitting the laser.

(4-1)Charger roller unit

The roller with the electric charge gets the drum surface charge evenly by contacting and rotating the roller.

(4-2)Cleaning

The remaining toner on the drum surface after transferring is removed by the cleaning blade, and collected to the waste toner box by the drum screw. The cleaning lamp consists of the LED, and it removes the remaining electric charge on the drum before the main charge.

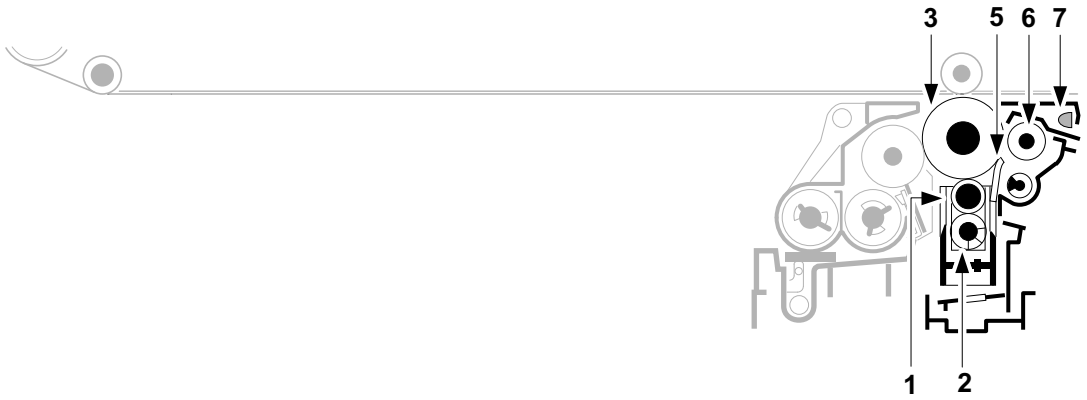

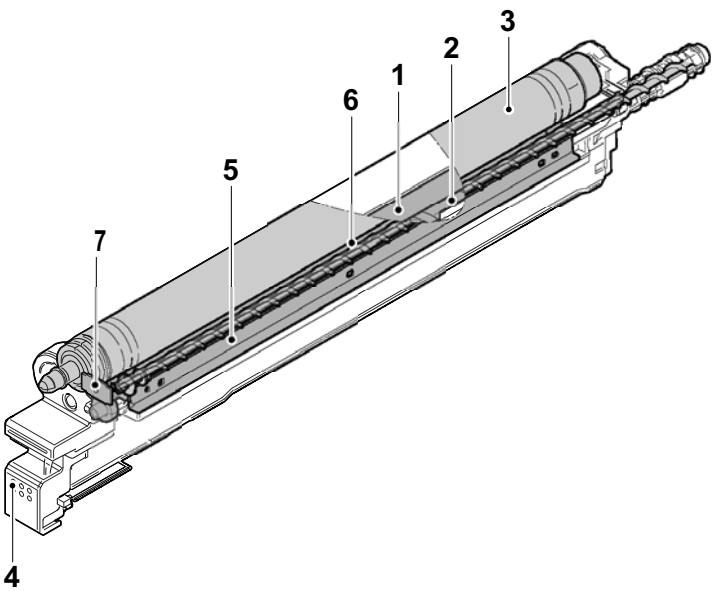

1. MC roller
2. Cleaning roller
3. Drum
4. Drum frame
5. Cleaning blade
6. Drum screw
7. Eraser

[Block diagram]

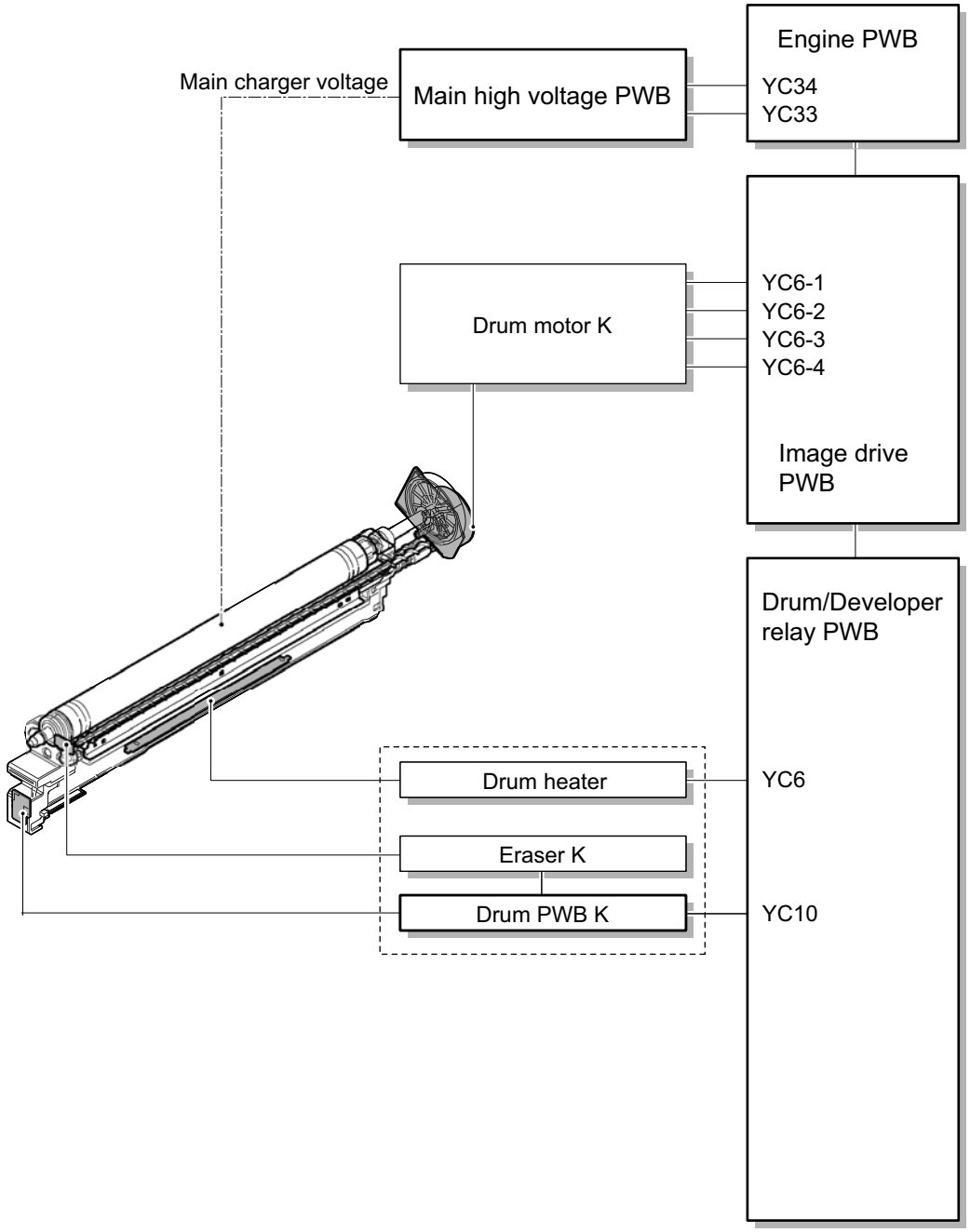

(5)Transfer/Separation section

(5-1)Primary transfer unit

The primary transfer section consists of the transfer cleaning unit, the transfer belt and primary transfer roller facing at drum, and it transfers the toner image on drum by inputing bias on primary transfer roller that faces to the drum. Also, the ID sensor attached to the main unit measures the image density on the transfer belt.

The transfer cleaning unit collects the remaining toner on the transfer belt after the secondary transfer, and carries it to the waste toner box as waste toner.

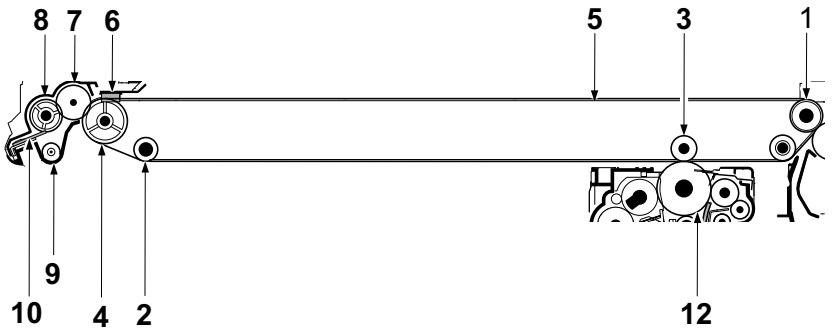

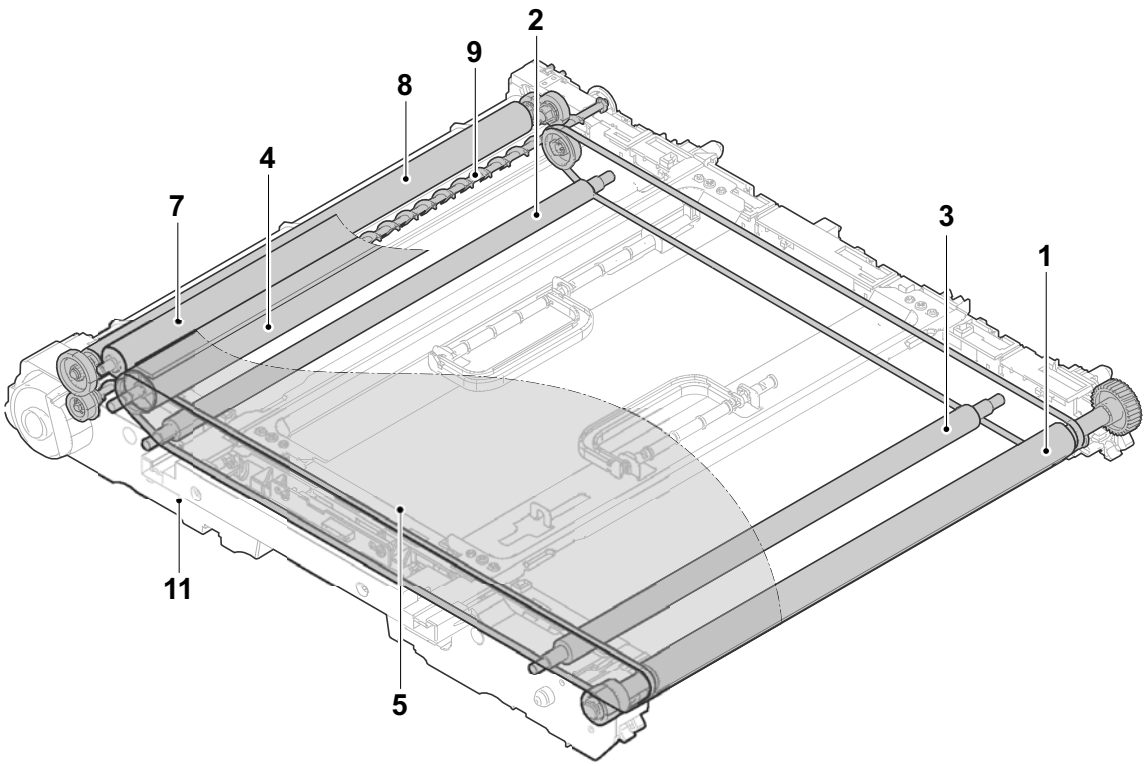

1.	Drive roller	5.	Transfer belt	9.	Cleaning screw
2.	Backup roller	6.	Belt pre-brush	10.	Cleaning blade
3.	Primary transfer roller	7.	Cleaning fur brush	11.	Transfer unit cover
4.	Tension roller	8.	Cleaning roller	12.	Drum

[Block diagram]

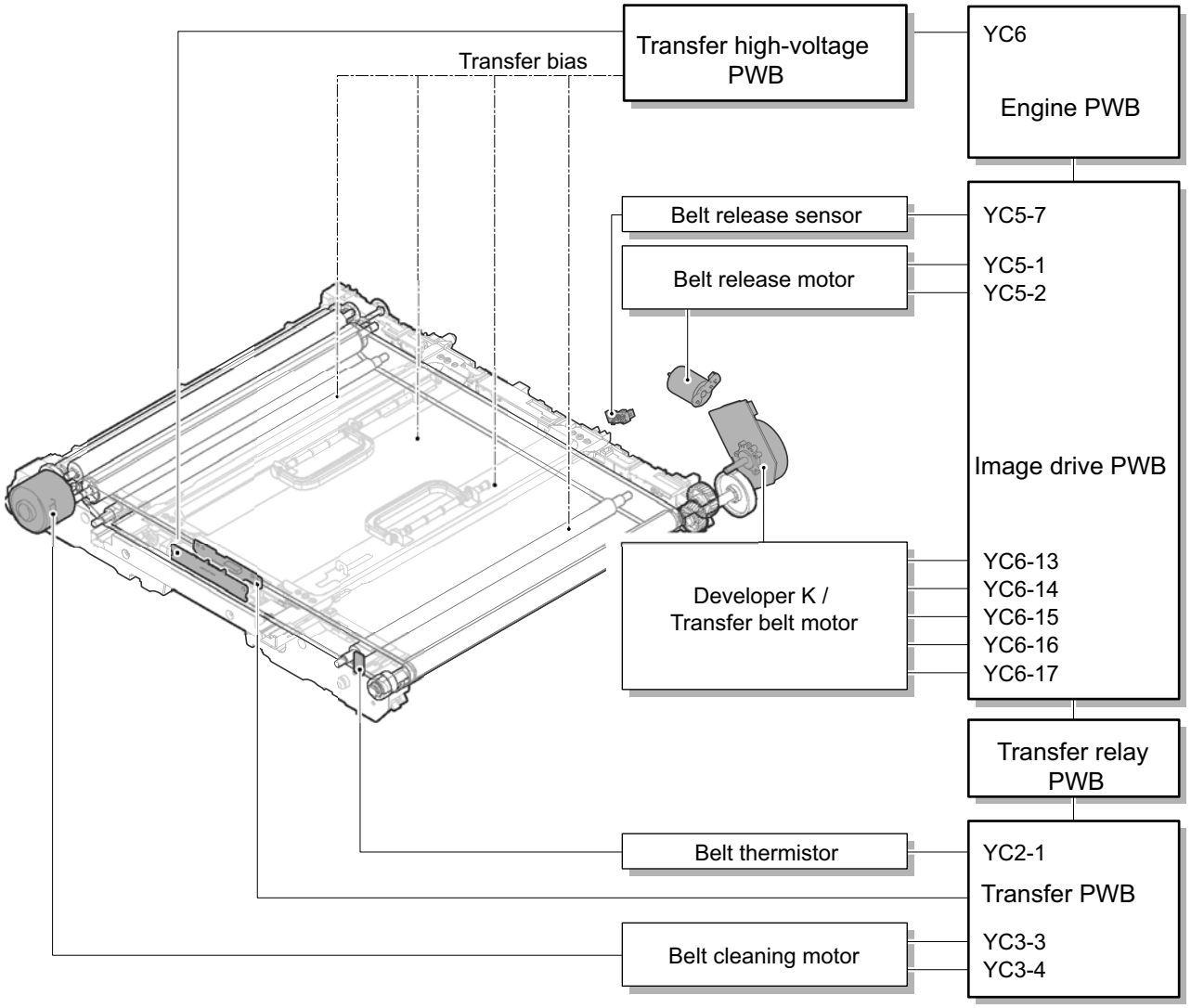

(5-2)Secondary transfer roller unit

Secondary transfer roller section is constructed with the secondary transfer roller, the static discharge needle, etc. that installed in the conveying unit.

Applying the DC bias from the transfer high voltage PWB to the drive roller, and secondary transfer roller is grounded to the GND.

The toner image formed on the transfer belt is transferred in the paper side by the potential difference, and then paper is separated by the curvature separation and discharged by the static discharge needle grounded in the GND.

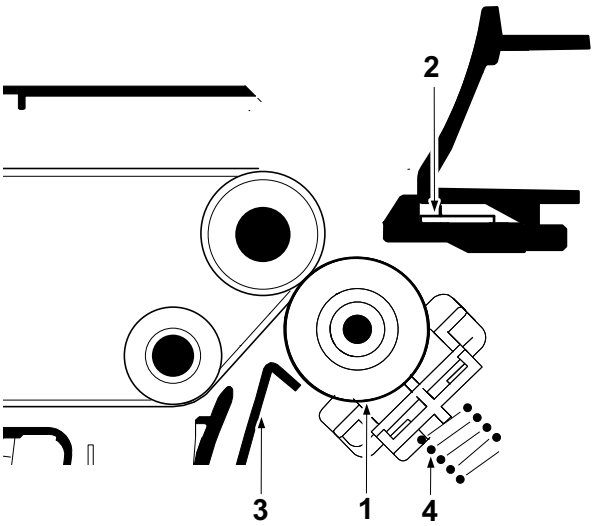

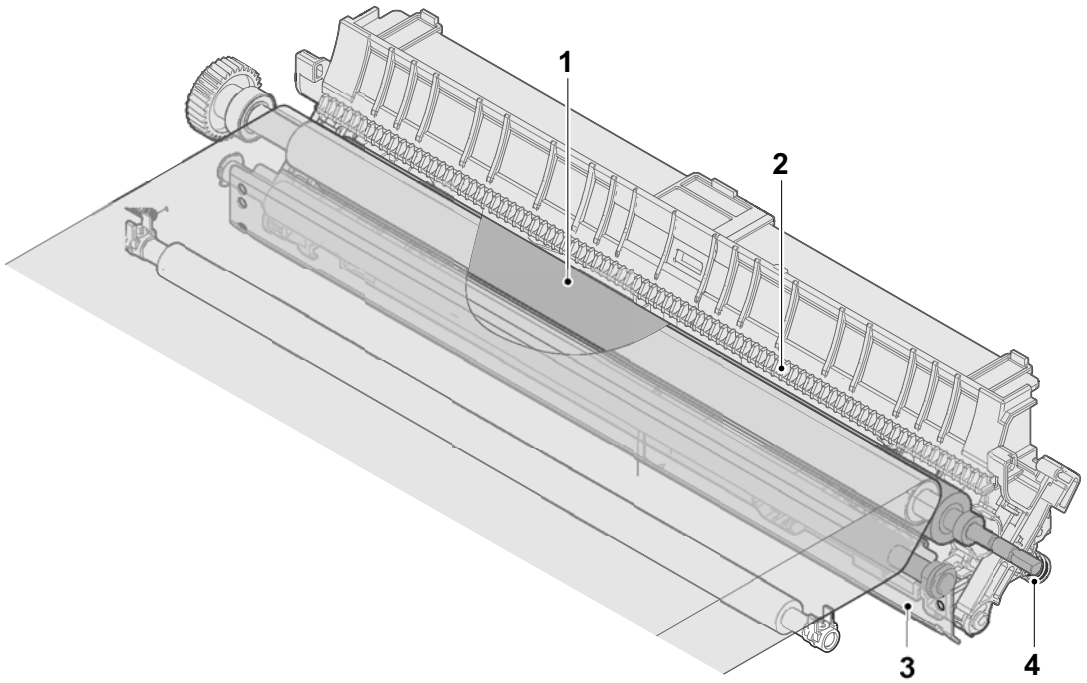

1. Secondary transfer roller
2. Discharger needle
3. Transfer front guide
4. Transfer spring

[Block diagram]

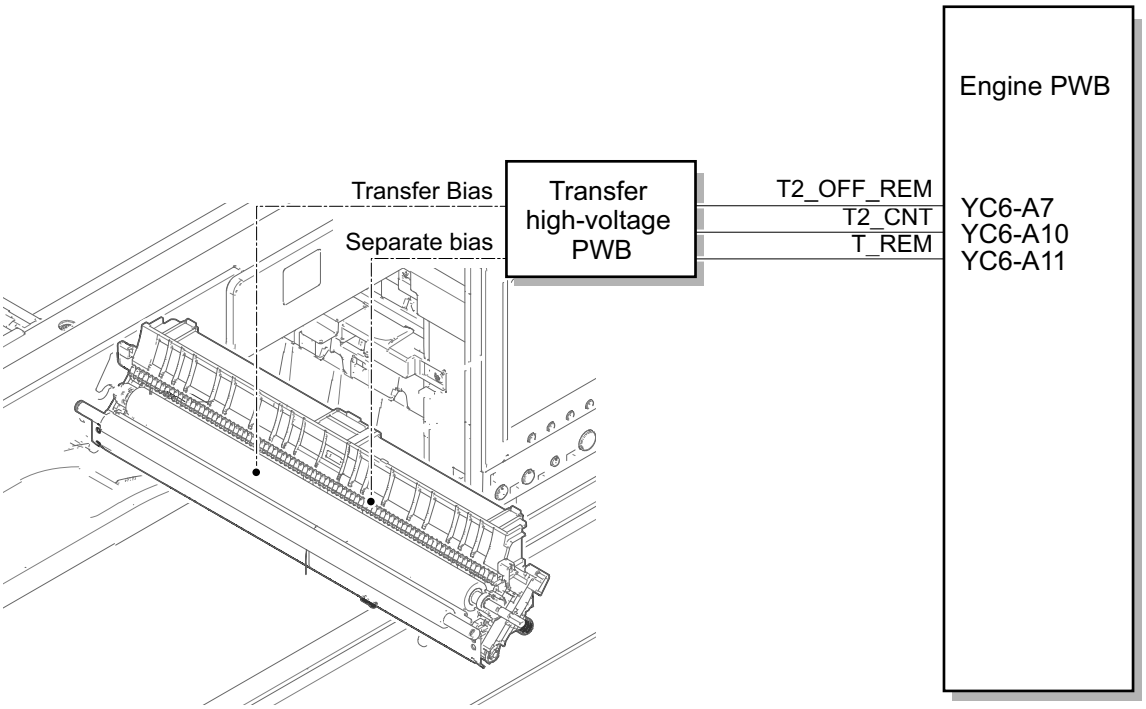

(6)Fuser section

The paper from the transfer/separation section go through between the heat belt and the press roller. Heat belt is heat by IH, and the paper is pressed by the press roller with spring power source. That makes toner melt and fix on paper.

The surface temperature of the heat roller and the press roller is detected by the fuser thermistor and controlled by the Engine PWB.

(6-1)Fuser unit

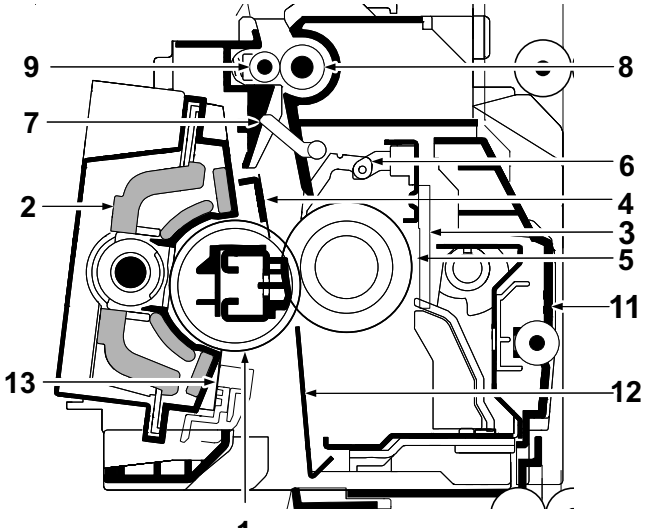

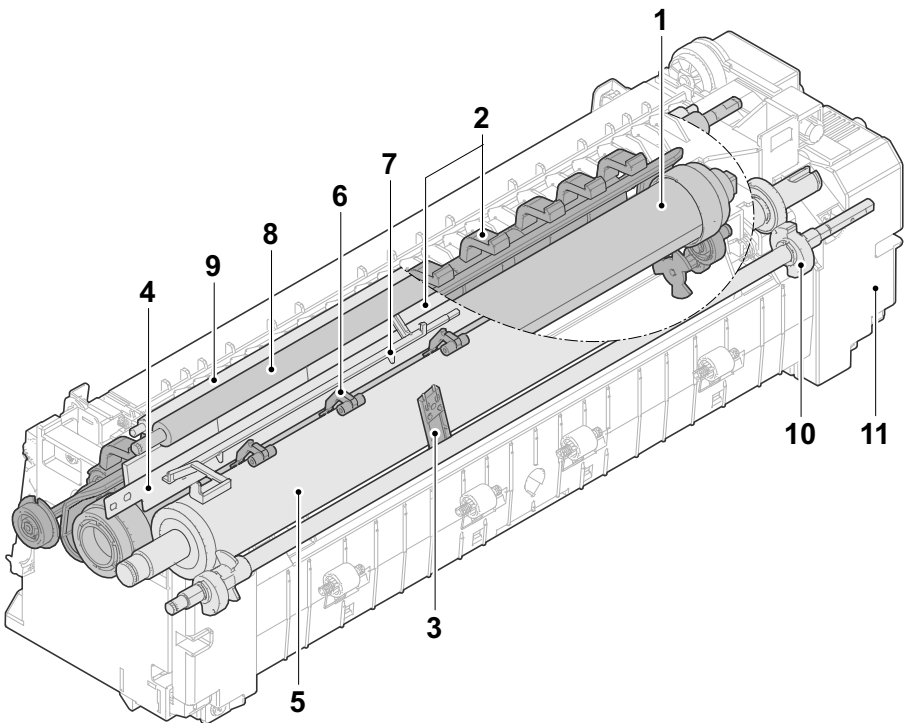

1.	Cooling the fuser belt edge.	6.	Press roller separation	11.	Fuser frame
2.	IH core	7.	Actuator (Fuser sensor)	12.	Fuser front guide
3.	Fuser thermistor	8.	Fuser exit roller	13.	Discharger needle
4.	Separator	9.	Fuser exit sub roller		
5.	Press roller	10.	Pressure switching cam		

[Block diagram]

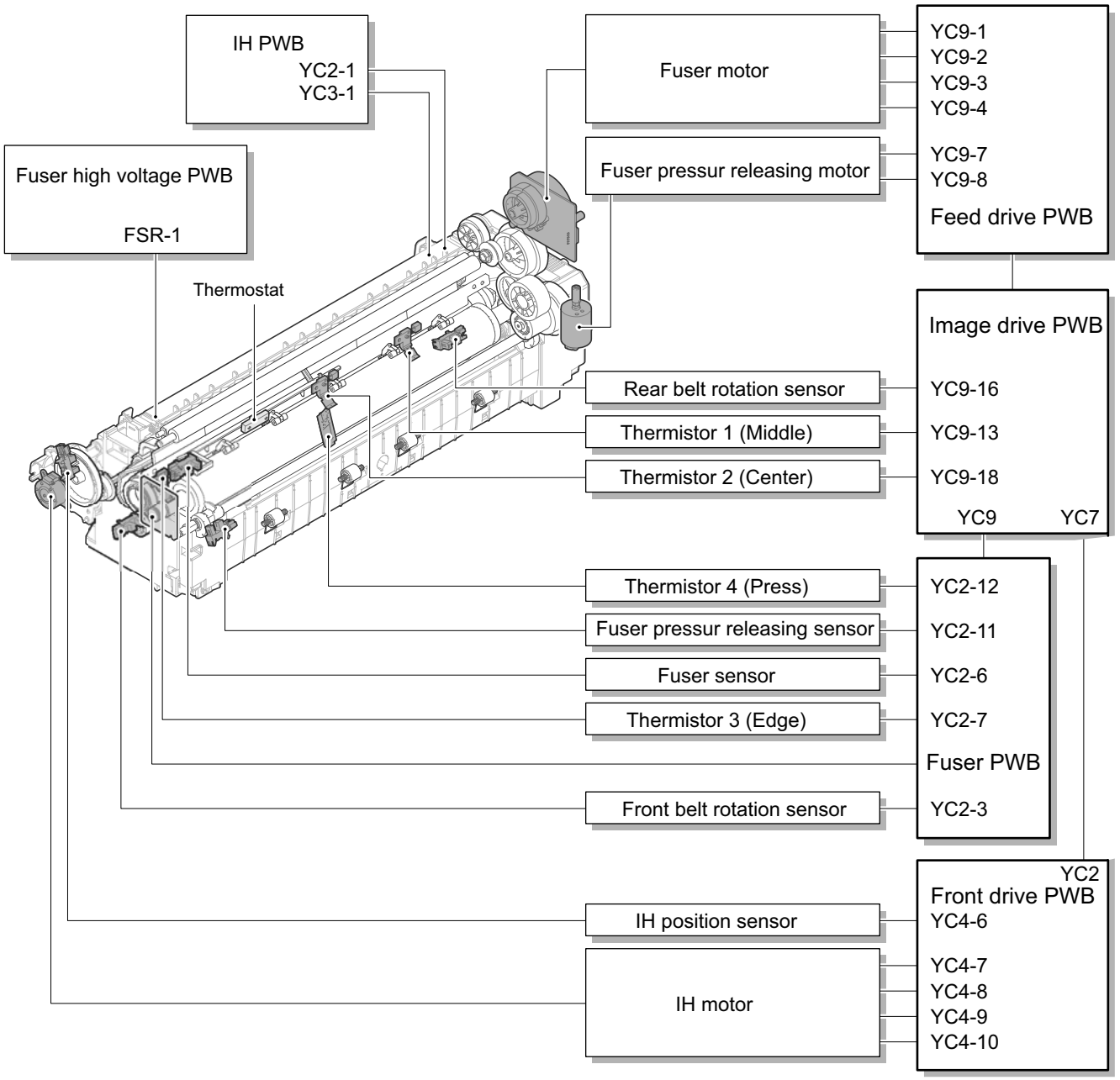

(7)Exit and feedshift section

The exit and branch section consists of the paper path from the fuser section to the inner tray or the duplex conveying section.

(7-1)Exit unit

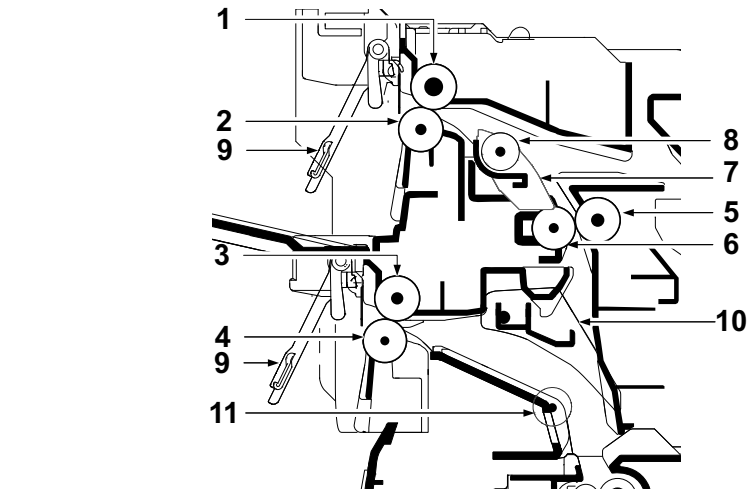

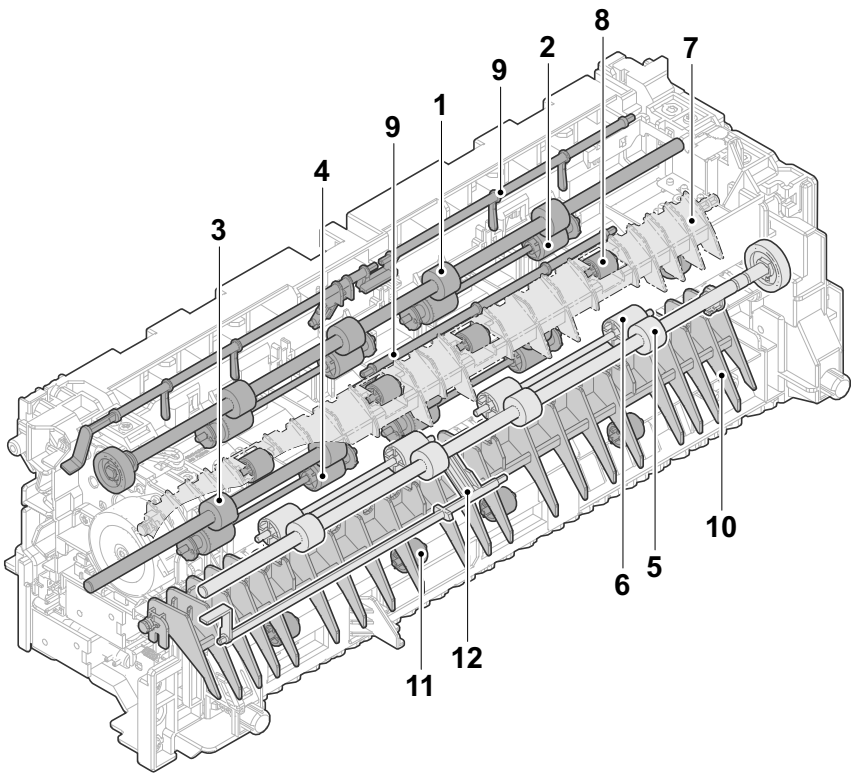

1.	Upper exit roller	5.	Exit conveying roller	9.	Actuator (Exit paper full sensor)
2.	Upper exit pulley	6.	Exit conveying pulley	10.	Exit feedshift guide
3.	Lower exit roller	7.	Switching guide	11.	Exit guide pulley
4.	Lower exit pulley	8.	Switching guide pulley	12.	Actuator (Exit switching sensor)

[Block diagram]

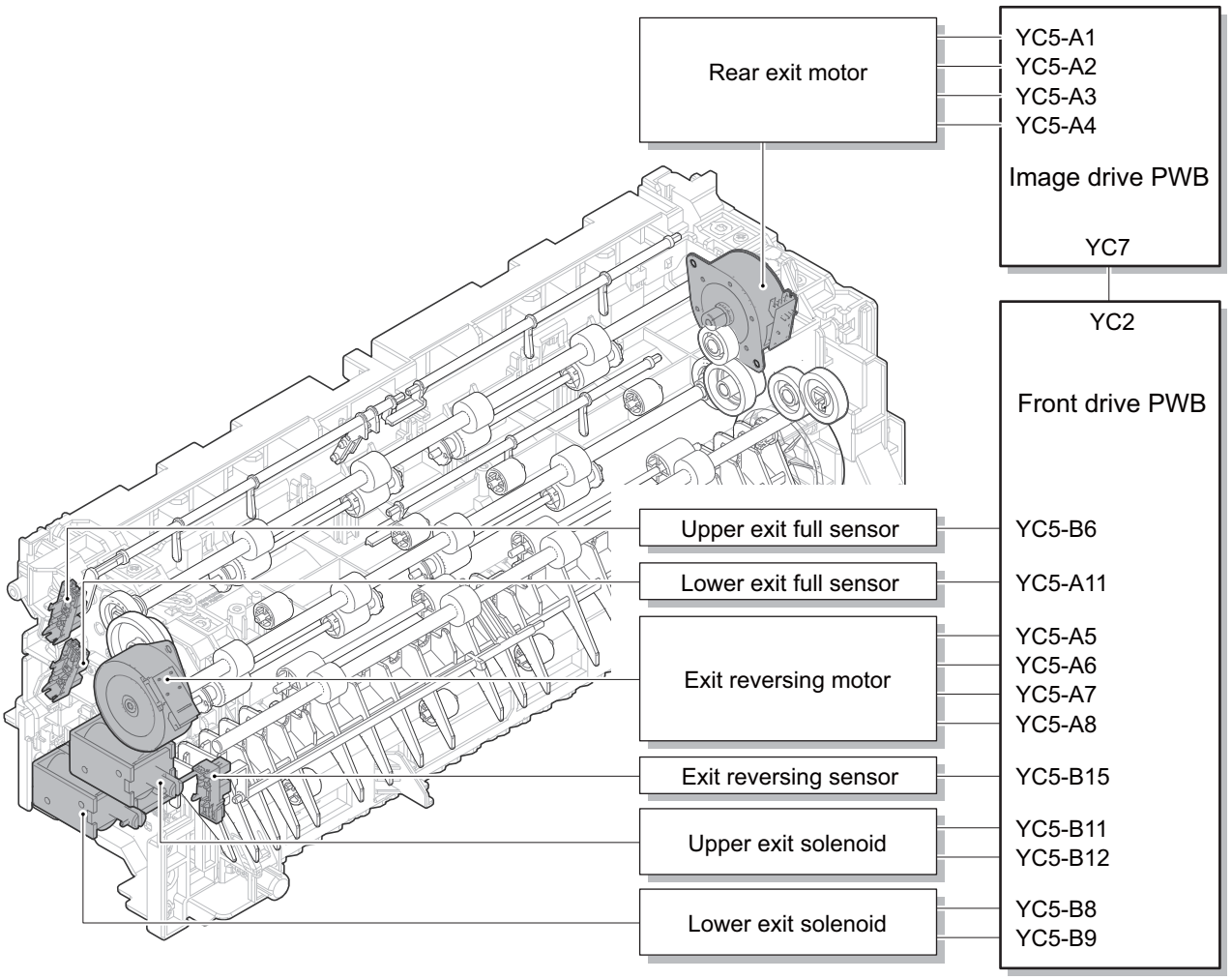

(7-2)Exit paper jam

In case that exiting paper gets stuck with paper on tray, have the lever longer.

1 Have the exit lever (c) on the exit actuator longer if the leading edge of paper (b) get stuck with trailing edge (a) of the exit paper.

2 The lever pushes down the trailing edge (a) of exit paper to prevent from hitting by the leading edge of next paper (b).

In case of stretching the exit level lever

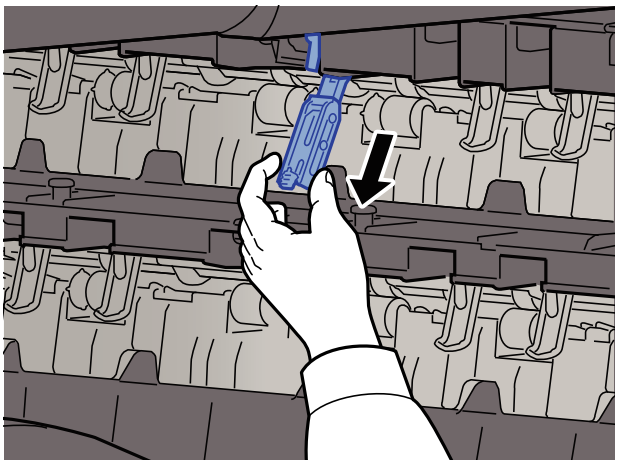

In case of restoring the exit level lever

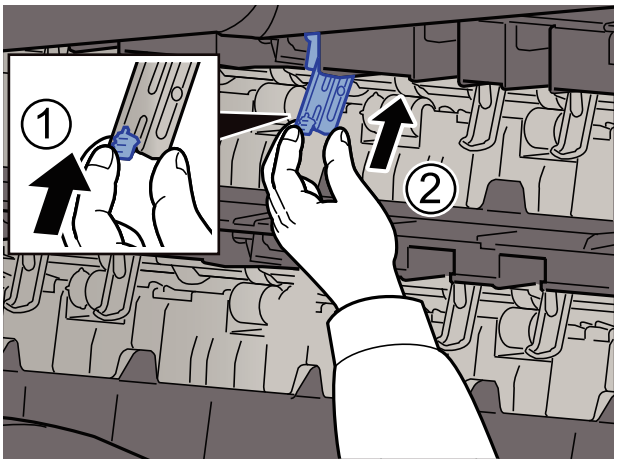

(8)Duplex conveying section

(8-1)Duplex conveying unit

The duplex conveying section consists of the paper path from the branch section (exit/feedshift) to the paper conveying section.

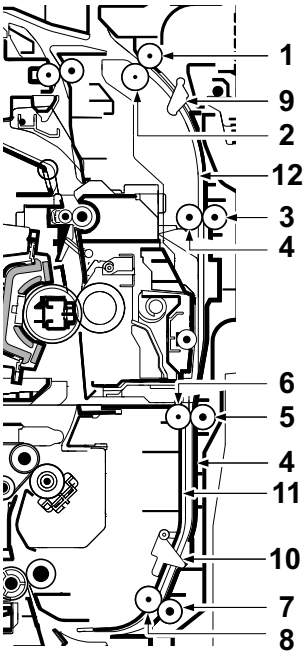

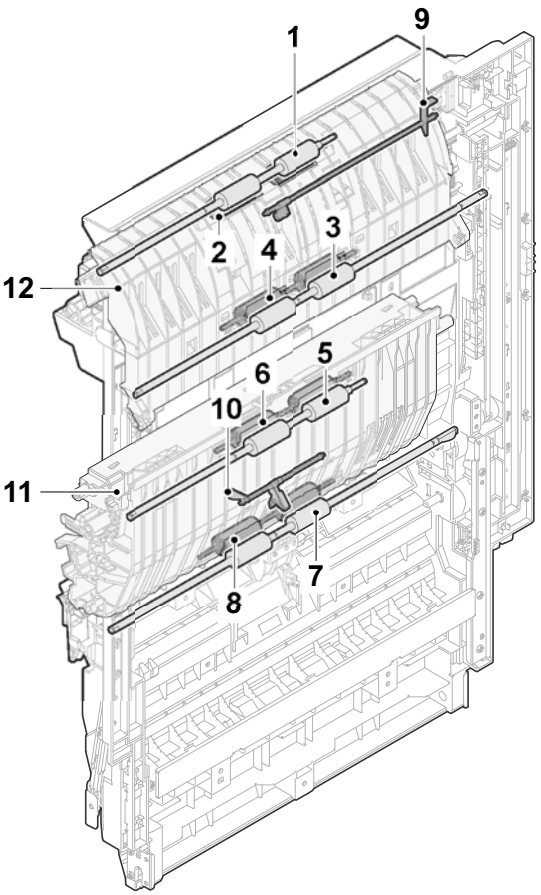

1.	DU conveying upper roller	5.	DU conveying lower roller	9.	Actuator (DU sensor 1)
2.	DU conveying upper pulley	6.	DU conveying lower pulley	10.	Actuator (DU sensor 2)

3.	DU conveying middle roller	7.	DU registration roller	11.	DU conveying base
4.	DU conveying middle pulley	8.	DU registration pulley	12.	DU conveying guide

[Block diagram]

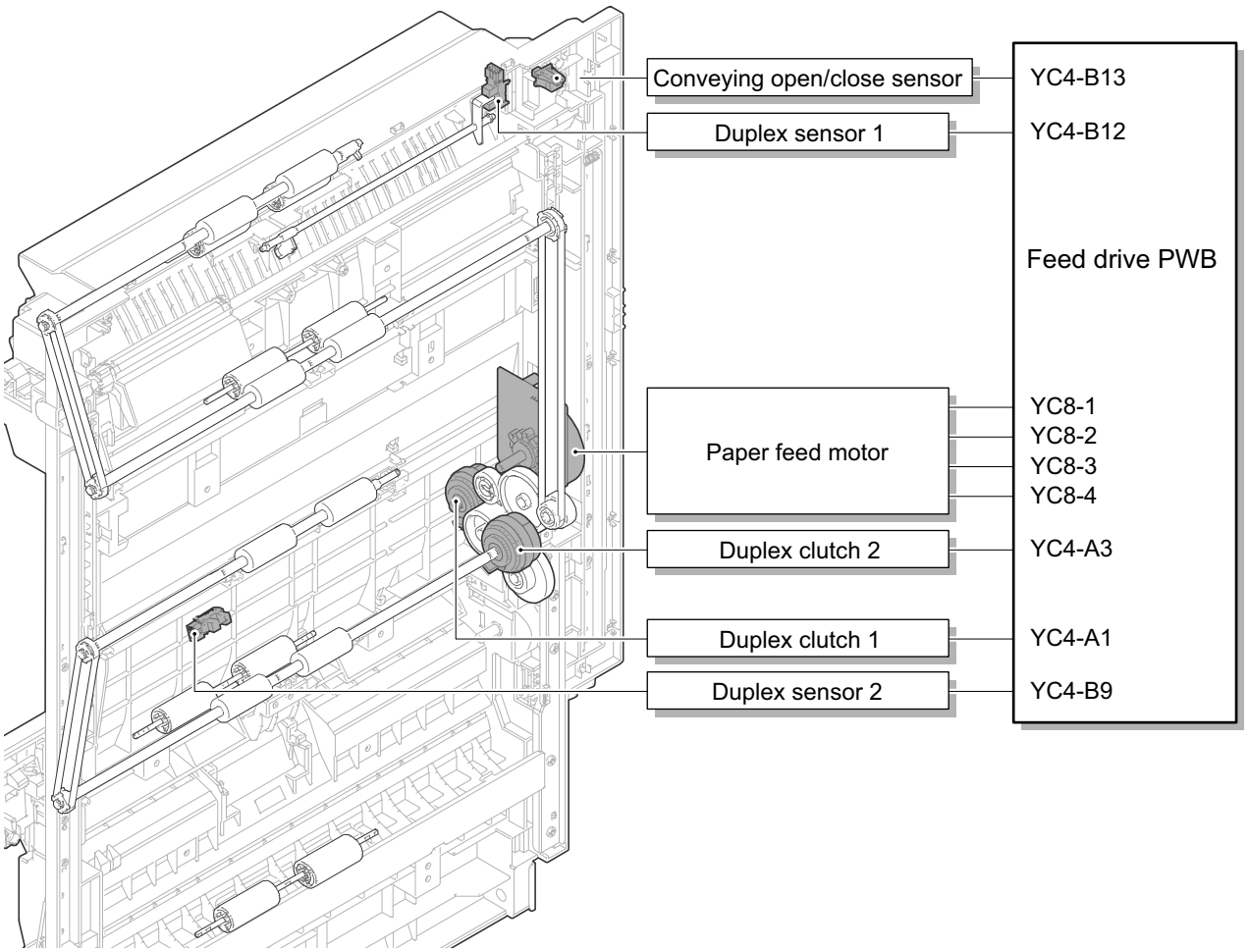

3 - 7 Mechanical configuration (Optional)

(1)Paper feeder (PF-7140)

(1-1)Cassette paper feed section

The cassette can load 550 sheets paper (64 g/m2) or 500 sheets paper (80 g/m2) and consists of 2 cassettes. Feeding from cassette works as picking up paper by rotating the pickup roller and conveys it to main unit by rotating the paper feed roller. Multi-feeding is also prevented by the effect of the retard roller.

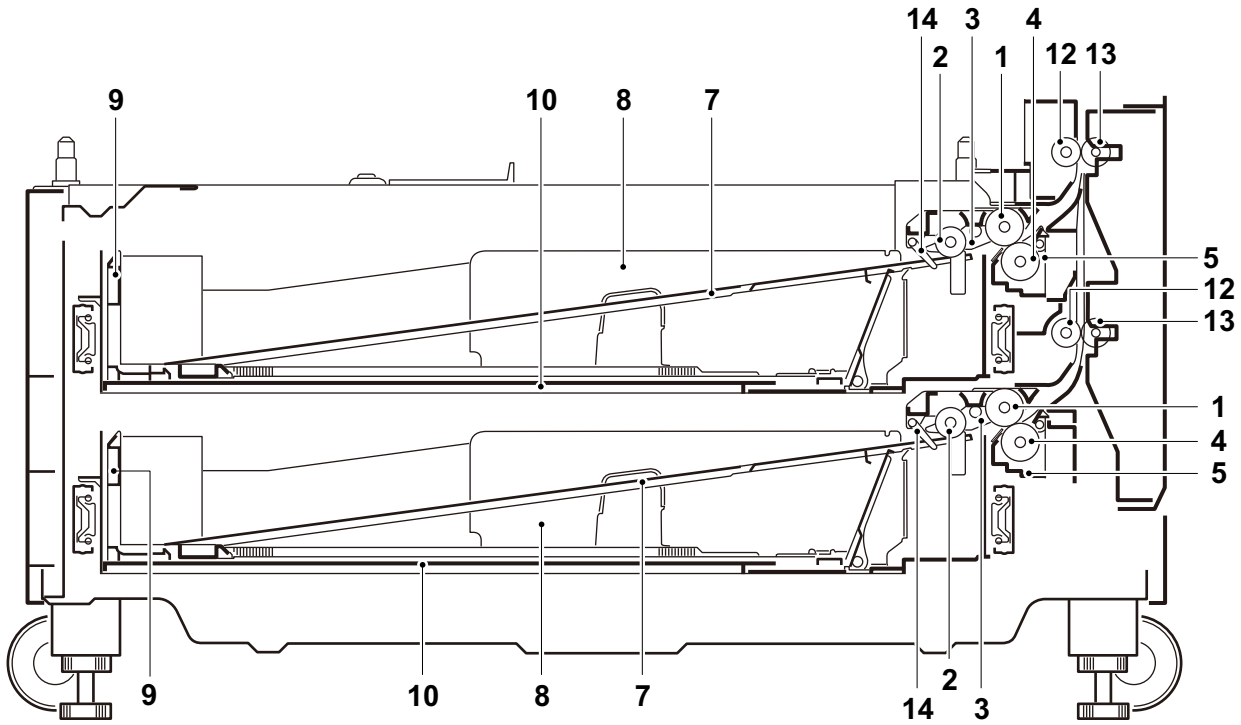

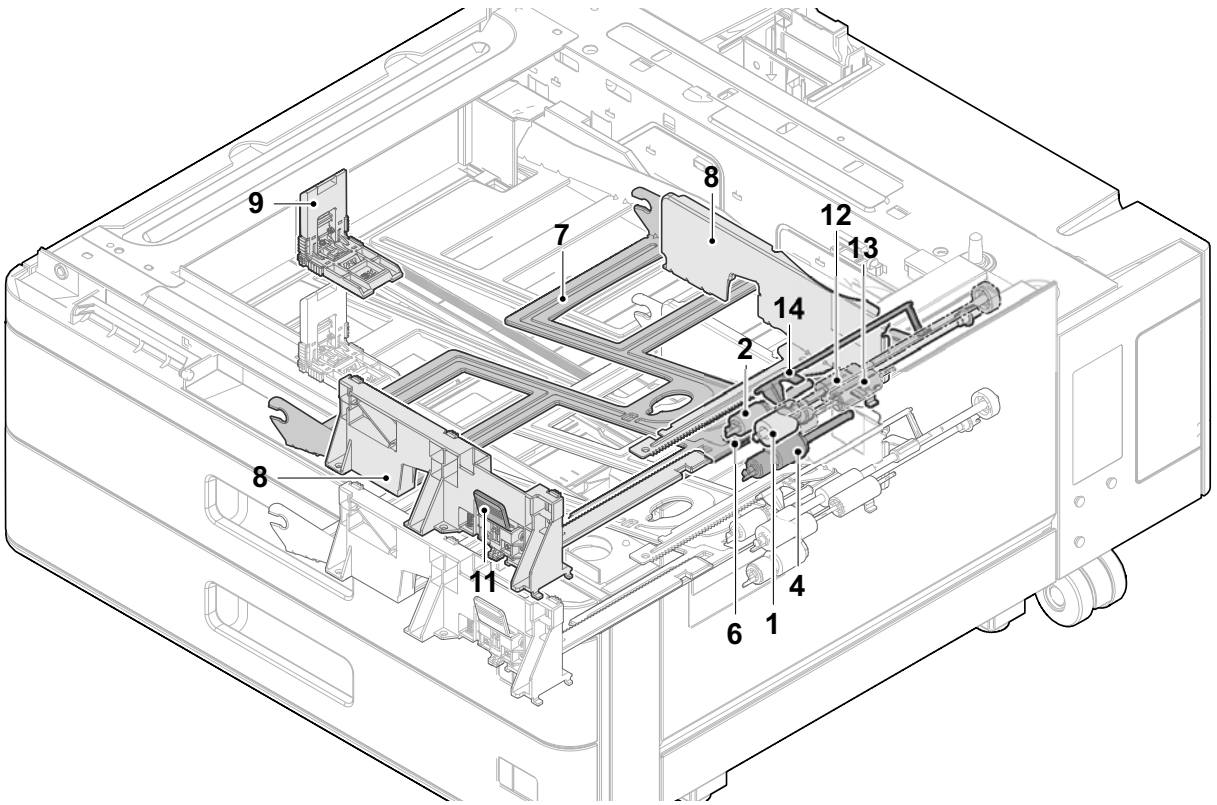

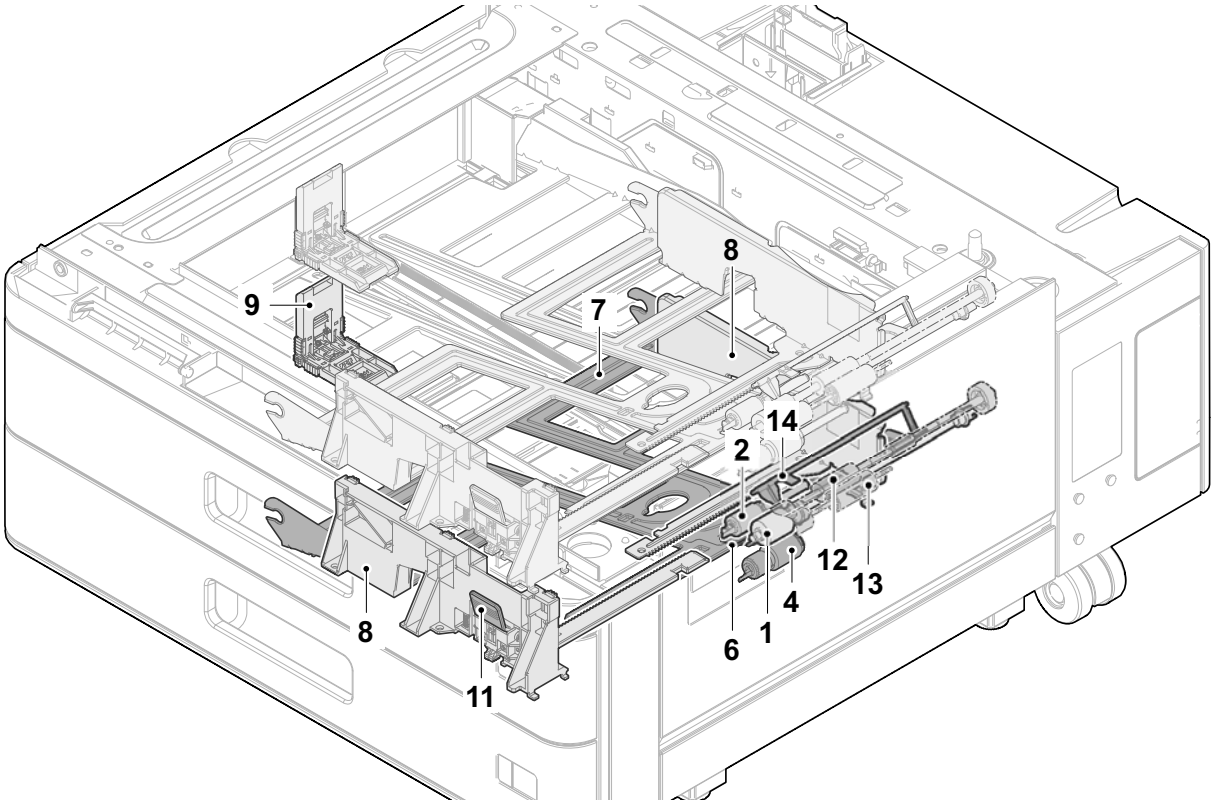

1. PF paper feed roller
2. PF pickup roller
3. PF pickup holder
4. PF retard roller
5. PF retard holder
6. PF friction pad
7. PF lift motor
8. PF paper width guides
9. Paper length guide
10. PF cassette base 2
11. PF width guide release lever 2
12. PF conveying roller
13. PF conveying pulley
14. PF actuator (PF paper sensor)

[Block diagram]

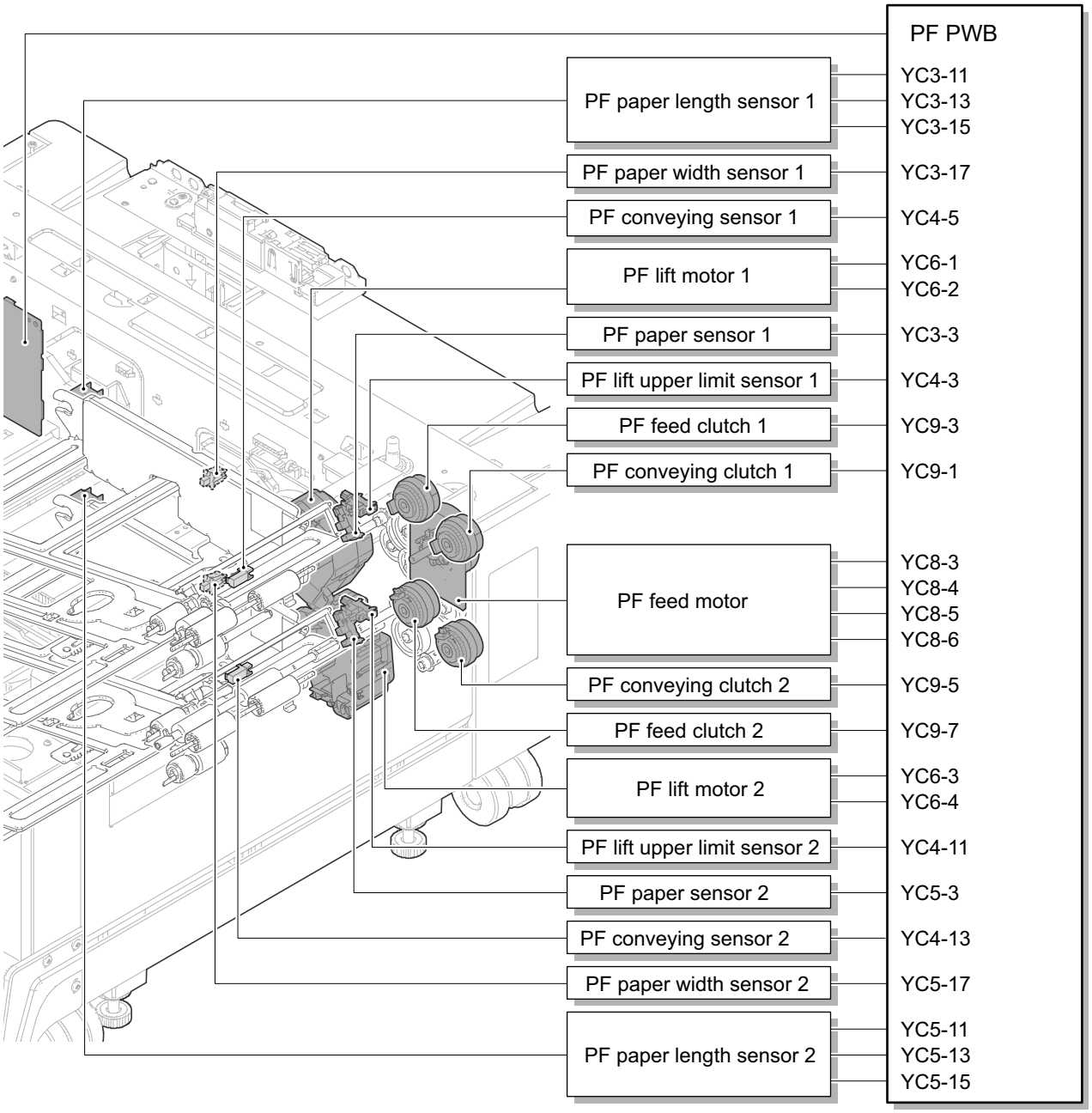

(2)Large capacity feeder (PF-7150)

(2-1)Cassette 2

The cassette can load 1,750 sheets paper (64 g/m2) or 1,500 sheets paper (80 g/m2). Feeding from cassette works as picking up paper by rotating the pickup roller and conveys it to main unit by rotating the paper feed roller. Multi-feeding is also prevented by the effect of the retard roller.

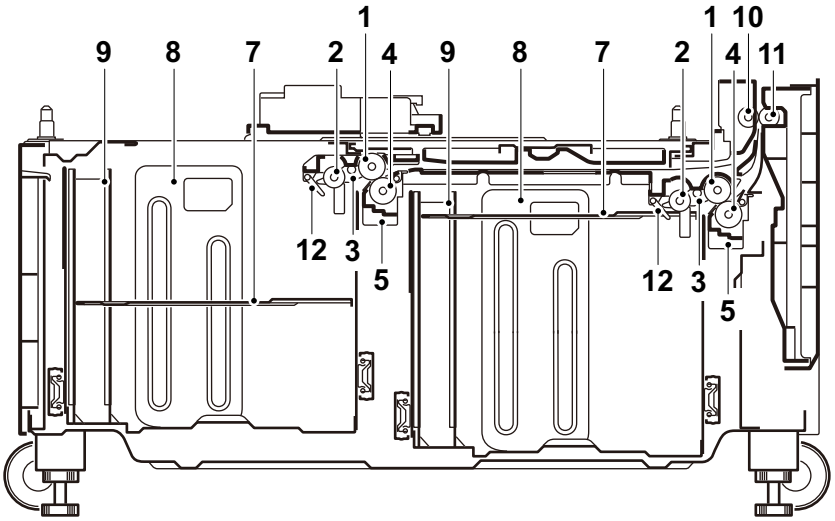

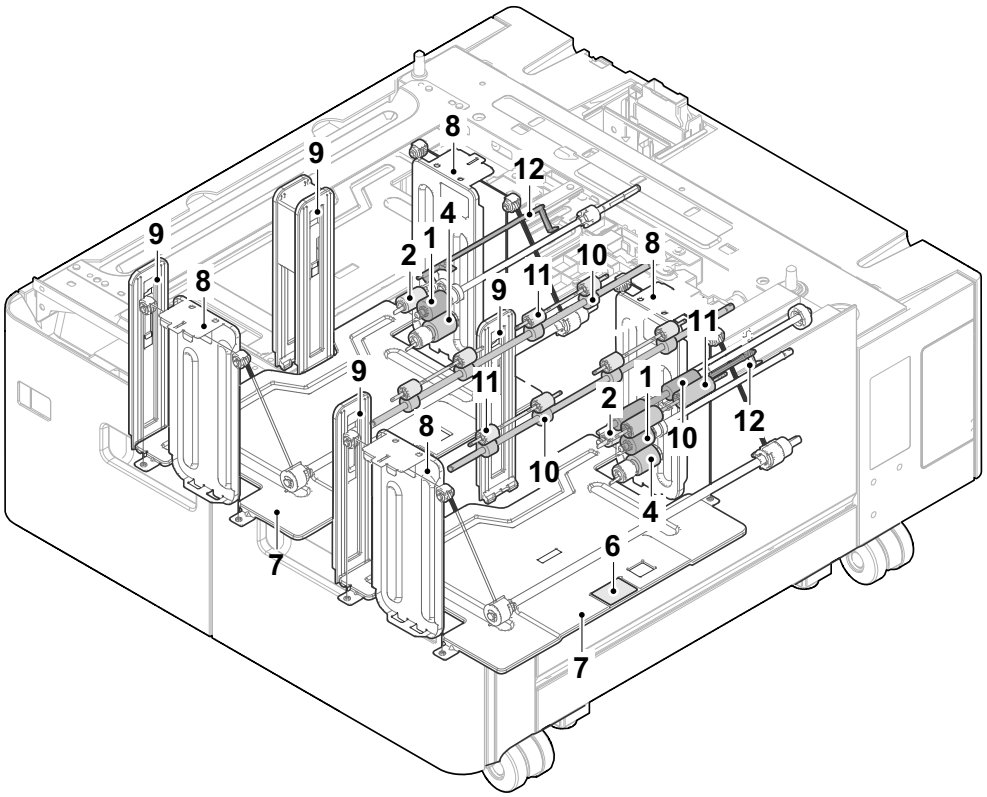

1.	PF paper feed roller	6.	PF friction pad	11.	PF conveying pulley
2.	PF pickup roller	7.	PF lift motor	12.	PF actuator (PF paper sensor)
3.	PF pickup holder	8.	PF paper width guides		
4.	PF retard roller	9.	Paper length guide *1		
5.	PF retard holder	10.	PF conveying roller		

*1: Inch specification only

[Block diagram]

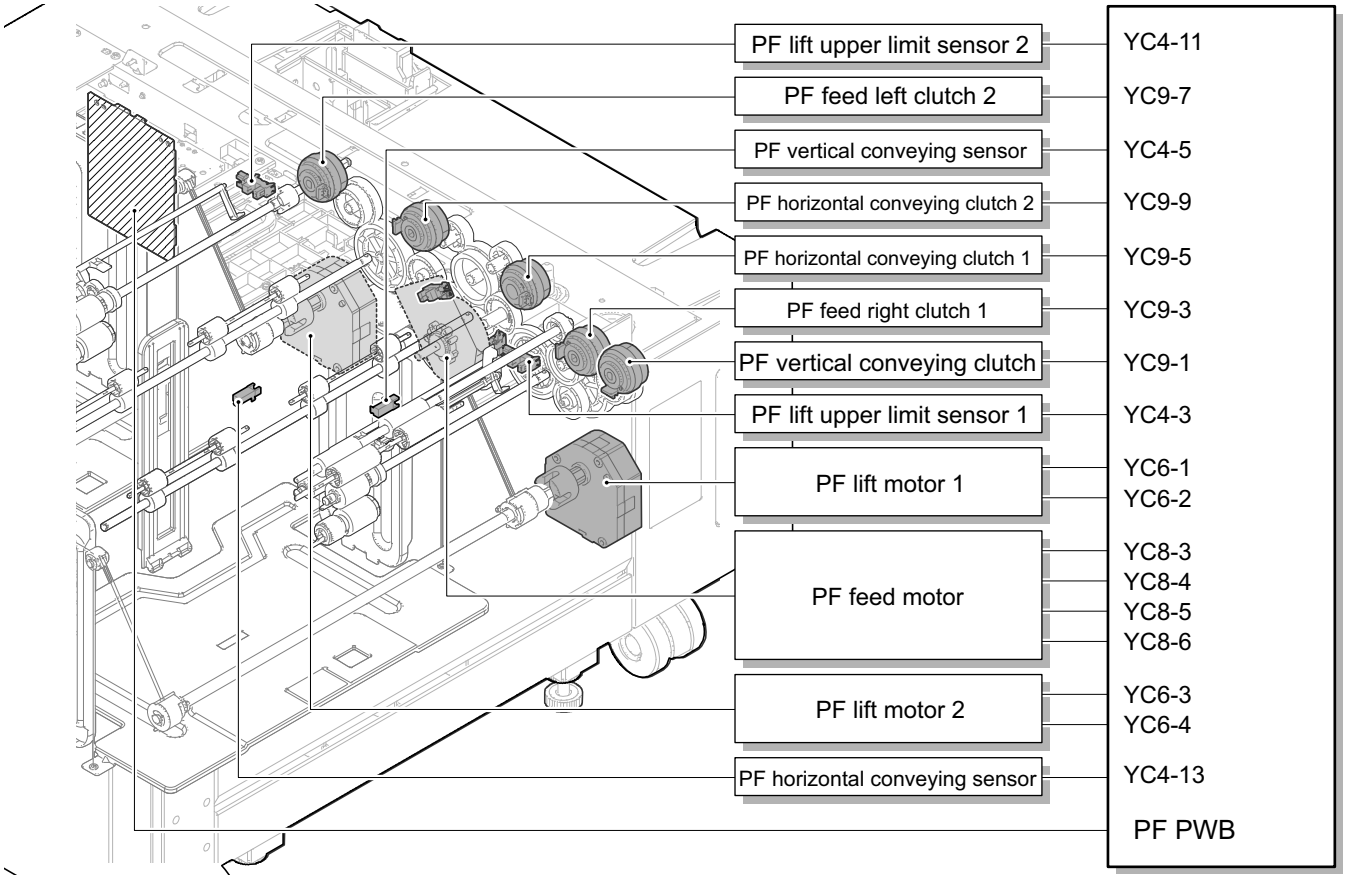

(3)Side Deck (PF-7120)

(3-1)Cassette paper feed section

The deck can load 3,500 sheets paper (64 g/m2) or 3,000 sheets paper (80 g/m2). Feeding from cassette works as picking up paper by rotating the pickup roller and conveys it to main unit by rotating the paper feed roller. Multi-feeding is also prevented by the effect of the retard roller.

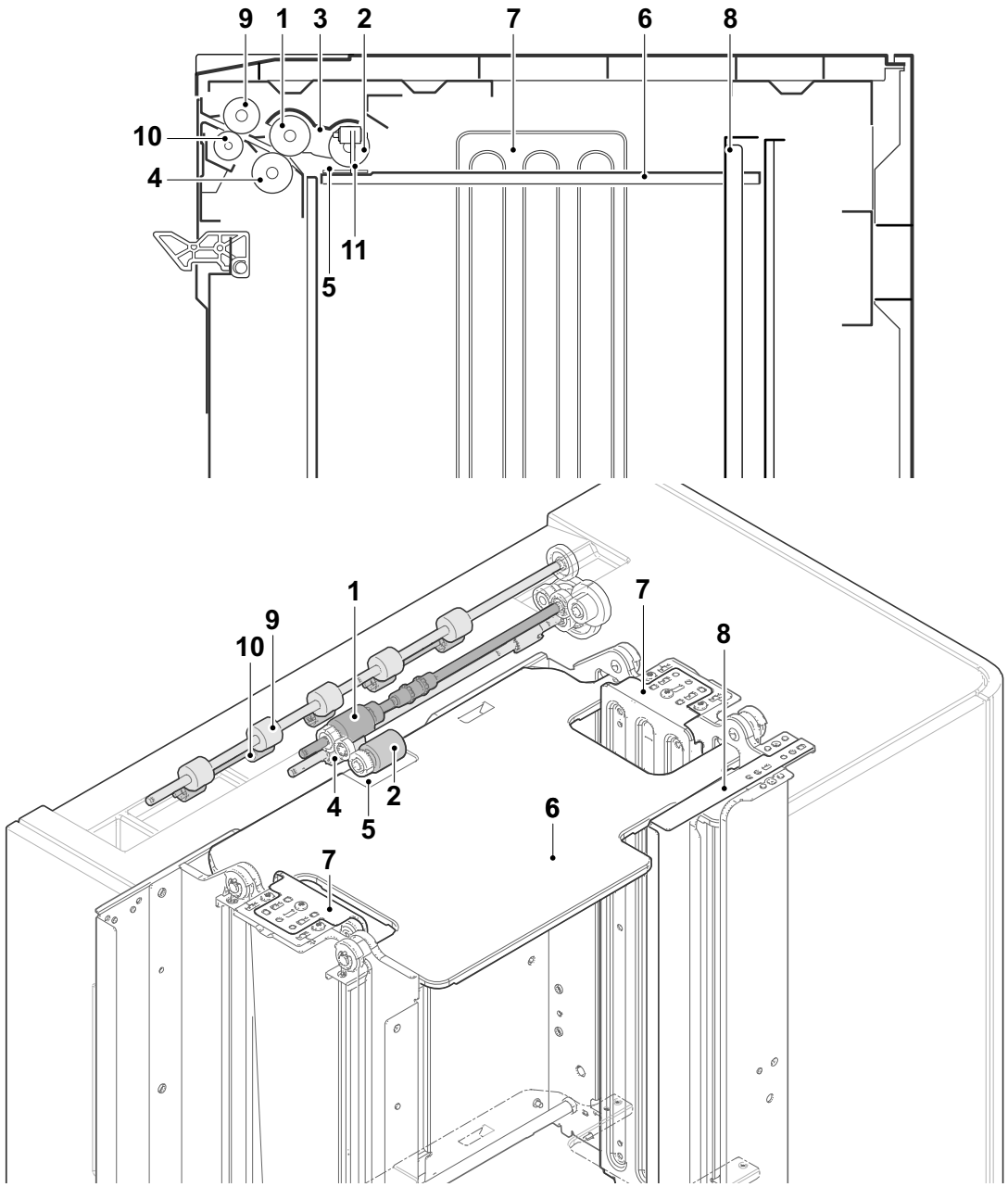

1.	PF paper feed roller	5.	PF friction pad	9.	PF conveying roller
2.	PF pickup roller	6.	PF lift motor	10.	PF conveying pulley
3.	PF pickup holder	7.	PF paper width guides	11.	PF actuator
4.	PF retard roller	8.	Paper length guide		

[Block diagram]

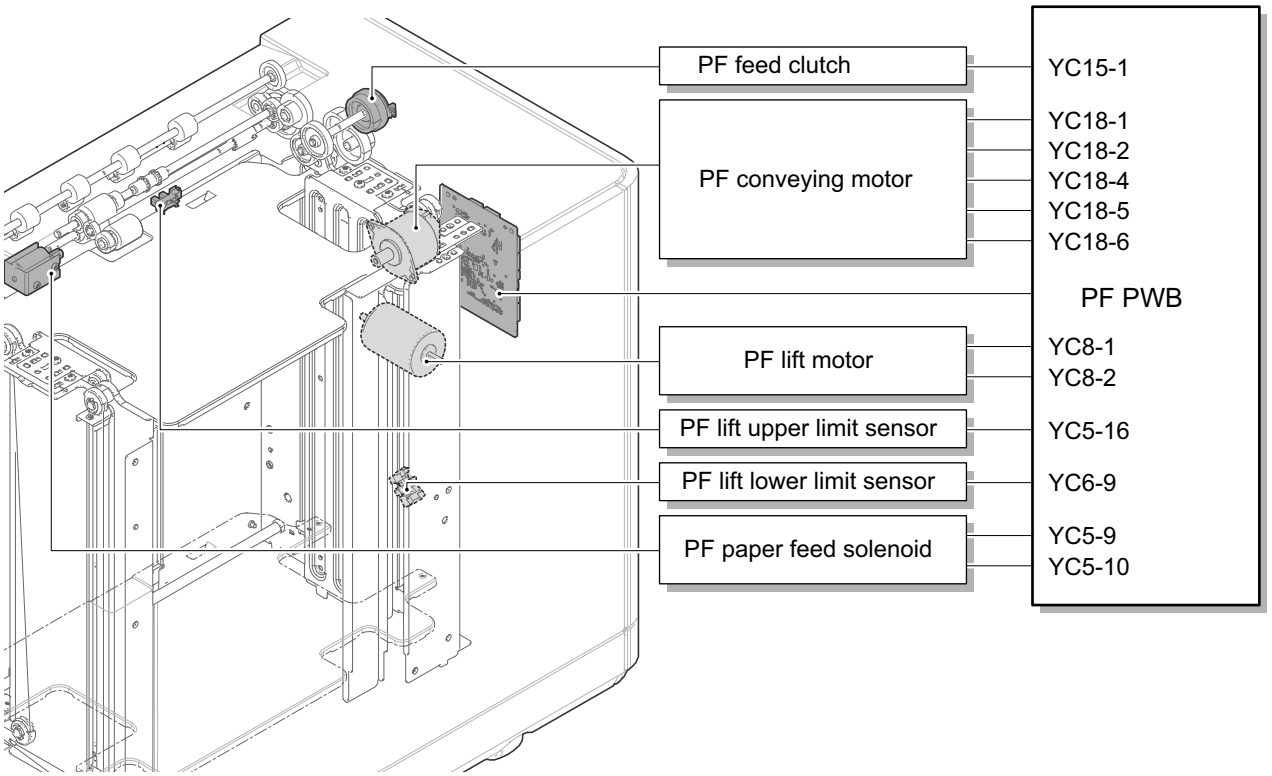

(4)Document processor (DP-7150)

(4-1)Original paper feed section

The original feed section consists of the parts in the figure, and conveys the original on the tray to the original conveying section. The original is fed by rotating the DP pickup roller and the DP feed belt.

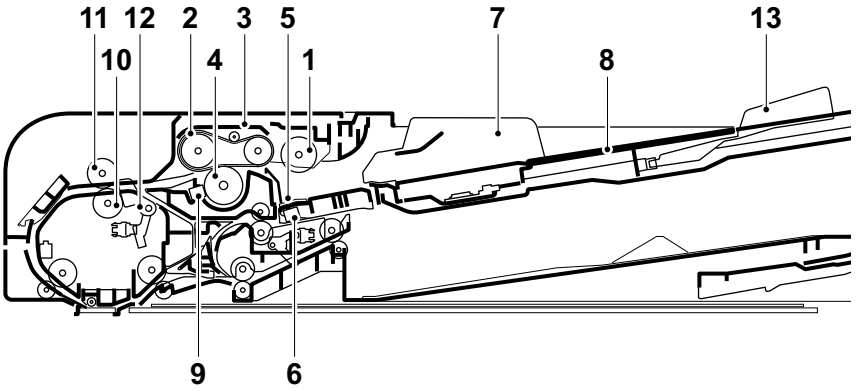

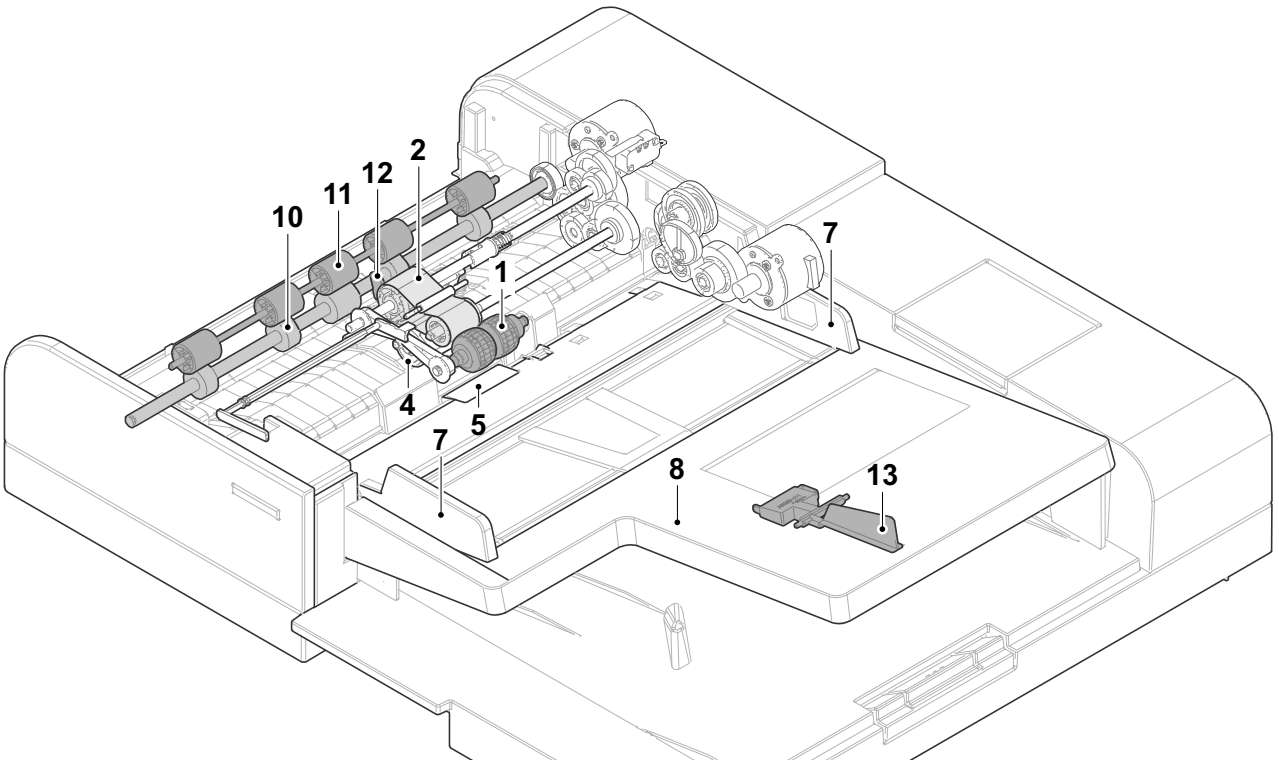

1.	Pickup roller	6.	DP original sensor	11.	DP registration pulley
2.	DP paper feed belt	7.	DP original width guide	12.	DP actuator (DP registration sensor)
3.	DP feed holder	8.	DP original tray	13.	DP actuator (DP original length sensor)
4.	MP Retard roller	9.	DP paper feed sensor		
5.	DF friction pad	10.	DP registration roller		

(4-2)Original conveying section and exit/switching section

The original conveying section consists of the parts in the figure. The original is scanned at the optical section (image sensor) in the main unit when the original passes by the DP slit glass.

The original exit/switching section consists of the parts in the figure. The original ,that is already scanned, is exit to the exit table by the exit roller. In case of switchback scanning, the original goes to the switchback tray once and then back to the original conveying section by the switchback roller.

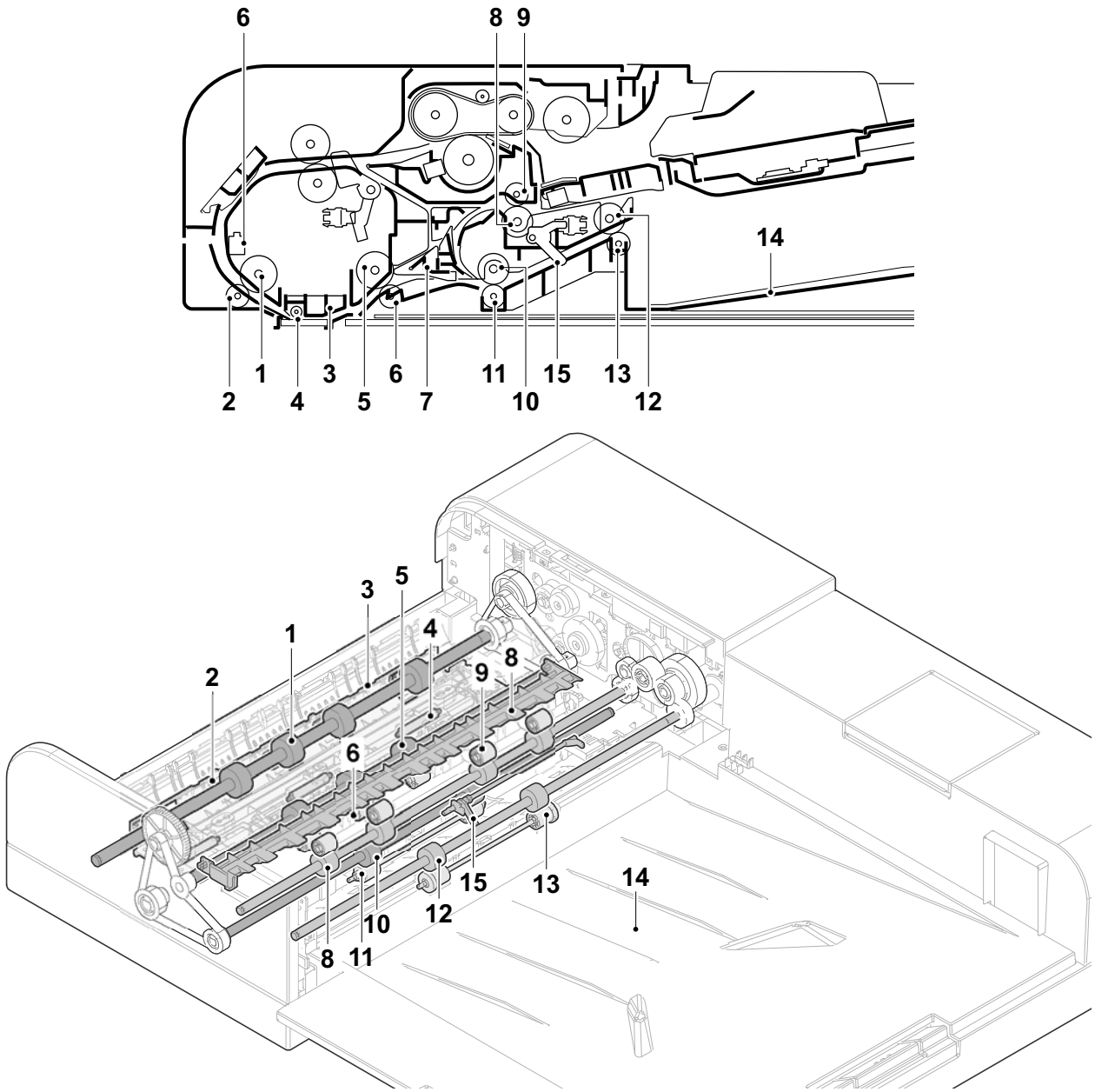

1.	DP conveying roller 1	6.	DP conveying pulley 2	11.	DP feedshift pulley
2.	DP conveying pulley 1	7.	DP feedshift guide	12.	DP exit roller
3.	DP reading guide	8.	DP reversing roller	13.	DP exit pulley
4.	DP scanner guide pulley	9.	DP reversing pulley	14.	DP exit tray
5.	DP conveying roller 2	10.	DP feedshift roller	15.	DP actuator (DP exit sensor)

[Block diagram]

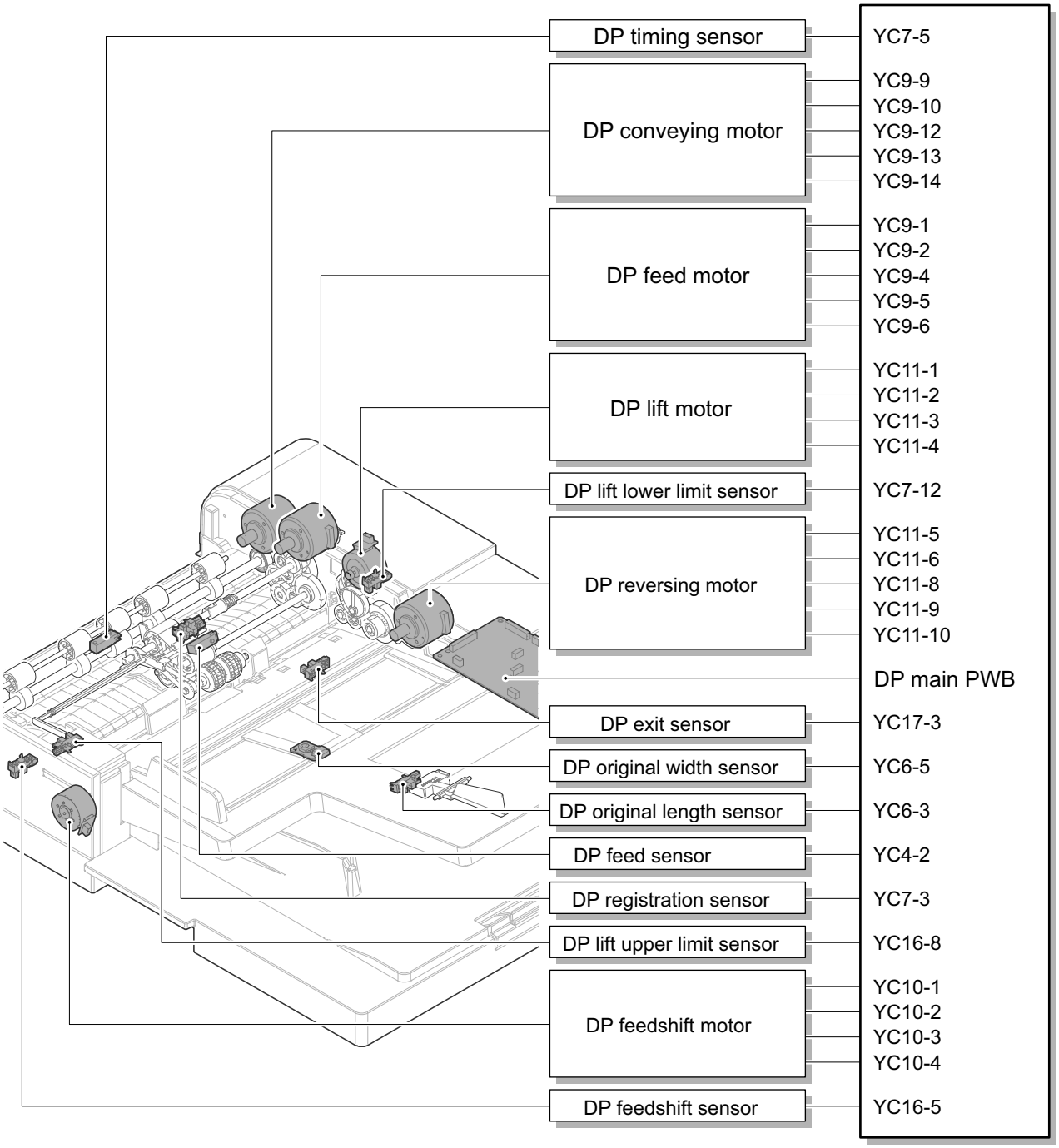

(4-3)Duplex (switchback) action

The first side of original is scanned at the slit glass (machine main body).

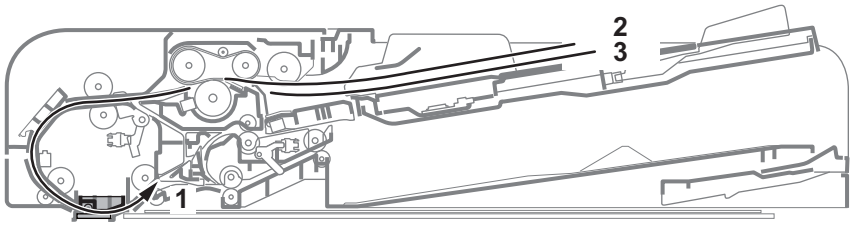

Slit glass: first side scanning

Conveyed to the DP switchback tray by the DP switchback feedshift guide.

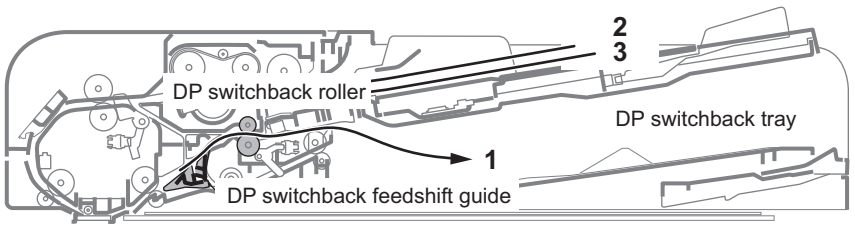

The original is reversed by the DP switchback roller.

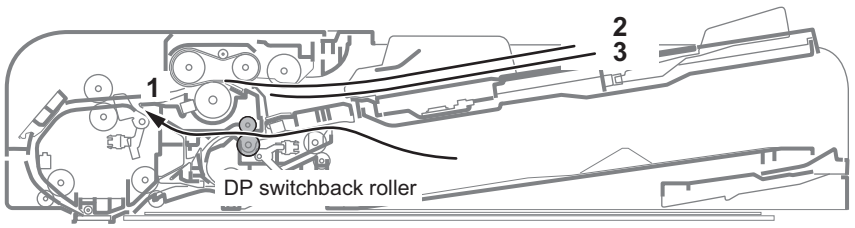

The second side of original is scanned at the slit glass (machine main body) and the original is conveyed to the DP switchback tray.

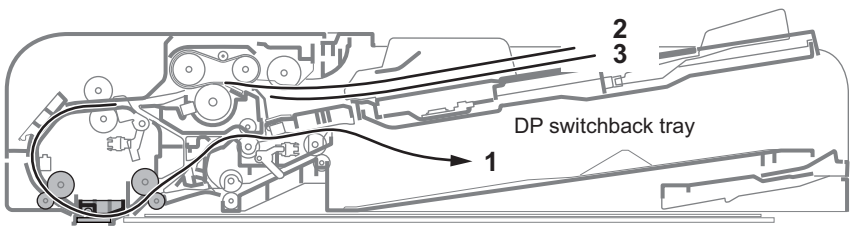

Slit glass: second side scanning

Ejected to the original eject table by the DP switchback, DP feedshift and DP eject rollers.

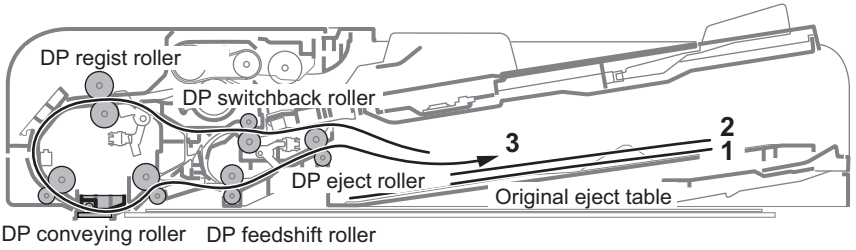

DP conveying roller DP feedshift roller

(5)Document processor (DP-7160)

(5-1)Original paper feed section

The original feed section consists of the parts in the figure, and conveys the original on the tray to the original conveying section. The original is fed by rotating the DP pickup roller and the DP feed belt.

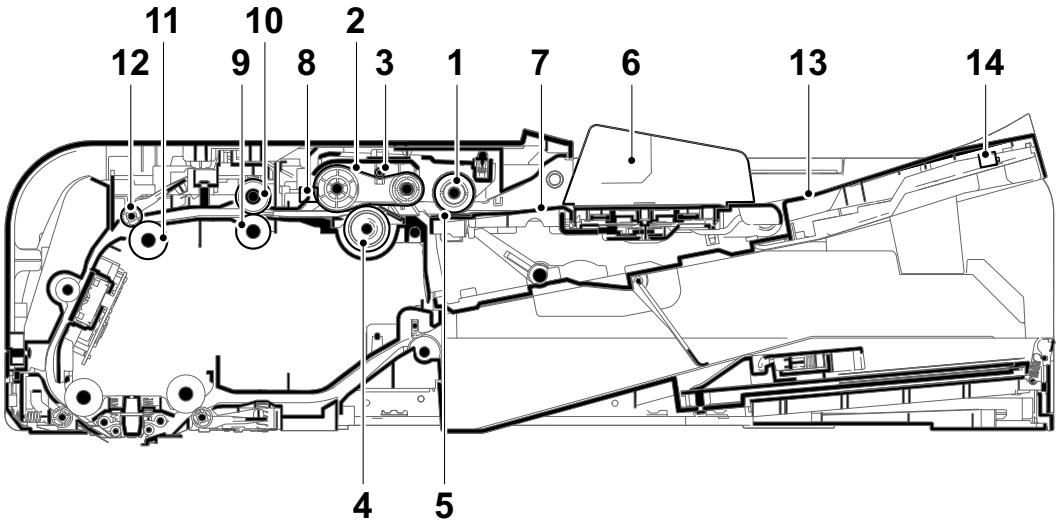

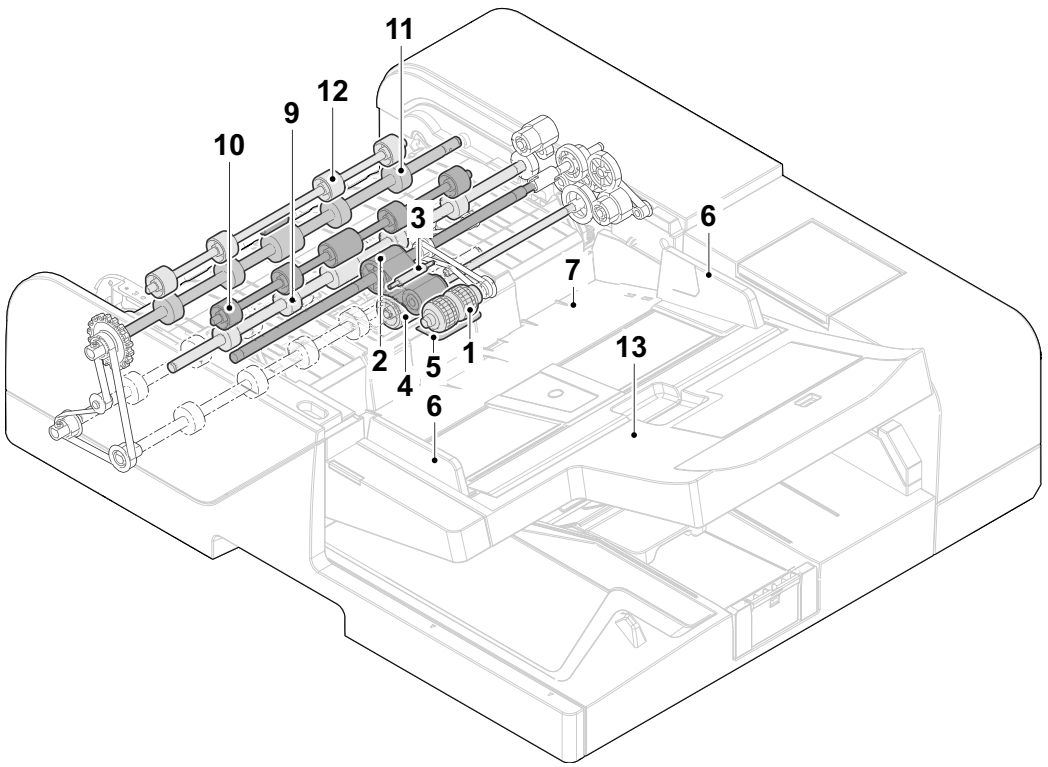

1.	DP pickup roller	6.	DP original width guide	11.	DP conveying roller 1
2.	DP paper feed belt	7.	DP lift motor	12.	DP conveying pulley 1
3.	DP belt tension pulley	8.	DP paper feed sensor	13.	DP original tray
4.	DP retard roller	9.	DP registration roller	14.	DP original length sensor
5.	DF friction pad	10.	DP registration pulley		

(5-2)Original conveying section and exit/switching section

The original conveying section consists of the parts in the figure. The 2nd side of the conveyed original is scanned when it passes by the CIS and the 1st side is scanned at the optical section (image sensor) in the main unit when it passes by the DP slit glass. The original ,that is already scanned, is exit to the exit table by the exit roller.

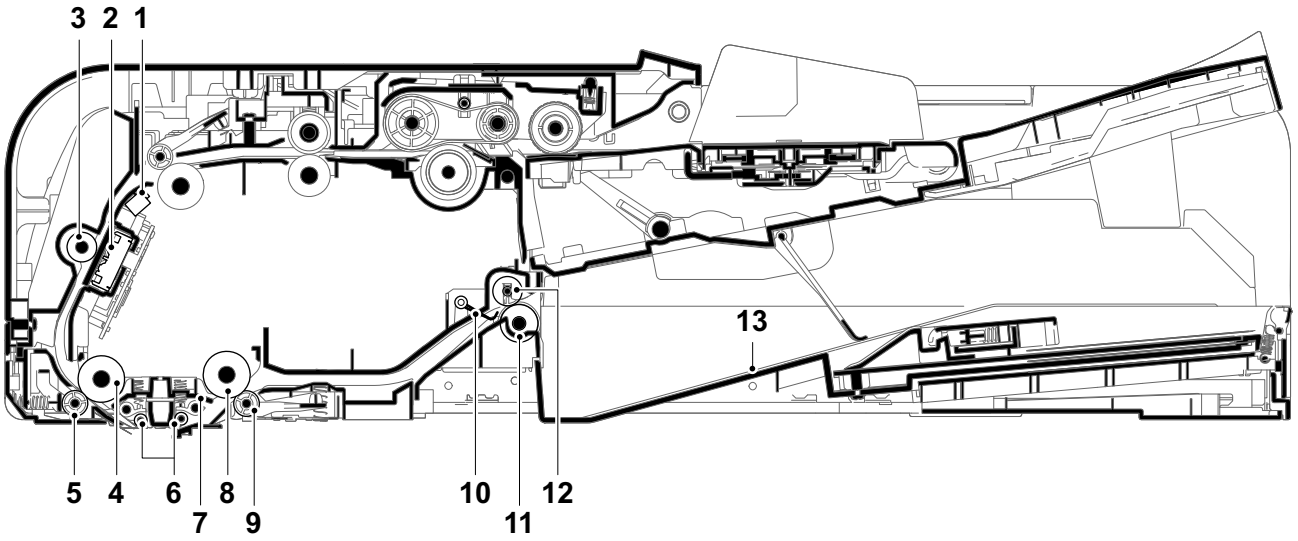

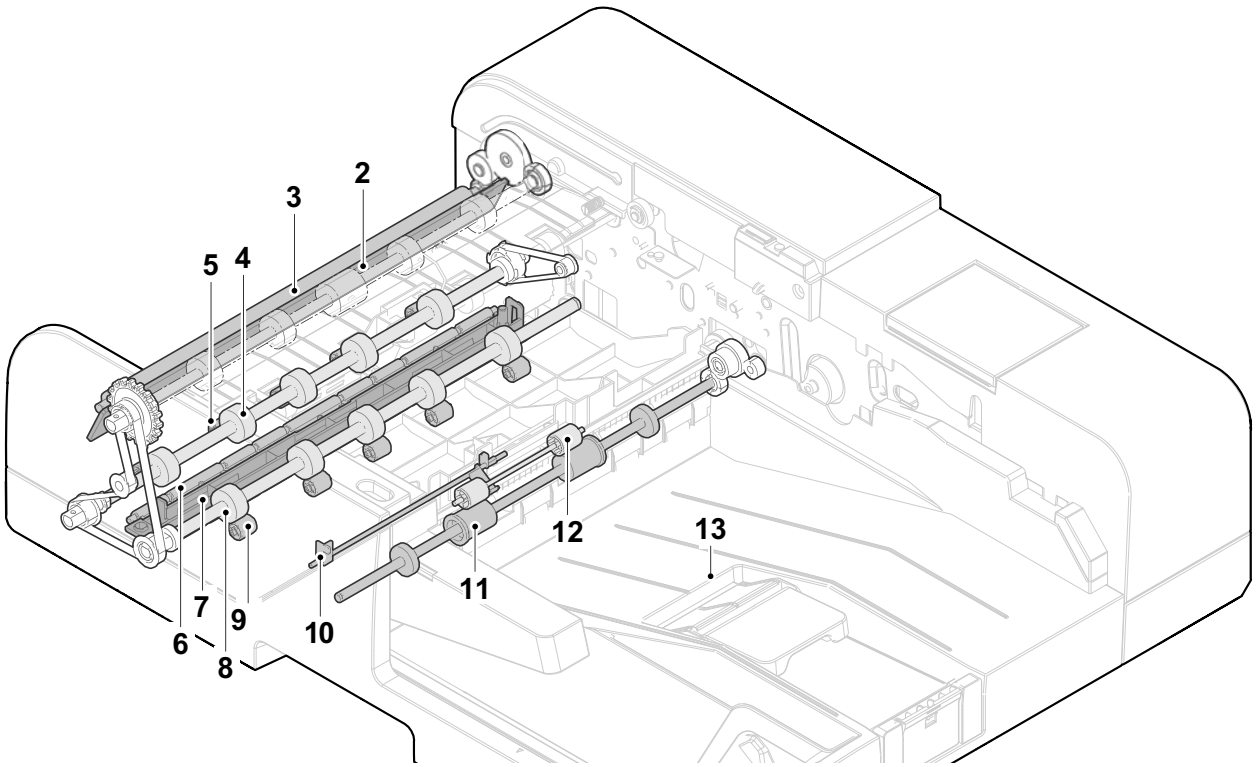

1.	DP backside timing sensor	6.	DP scanner guide pulley	11.	DP exit roller
2.	DPCIS	7.	DP reading guide	12.	DP exit pulley
3.	DPCIS roller	8.	DP conveying roller 3	13.	DP exit tray
4.	DP conveying roller 2	9.	DP conveying pulley 3		
5.	DP conveying pulley 2	10.	DP actuator (DP exit sensor)		

[Block diagram]

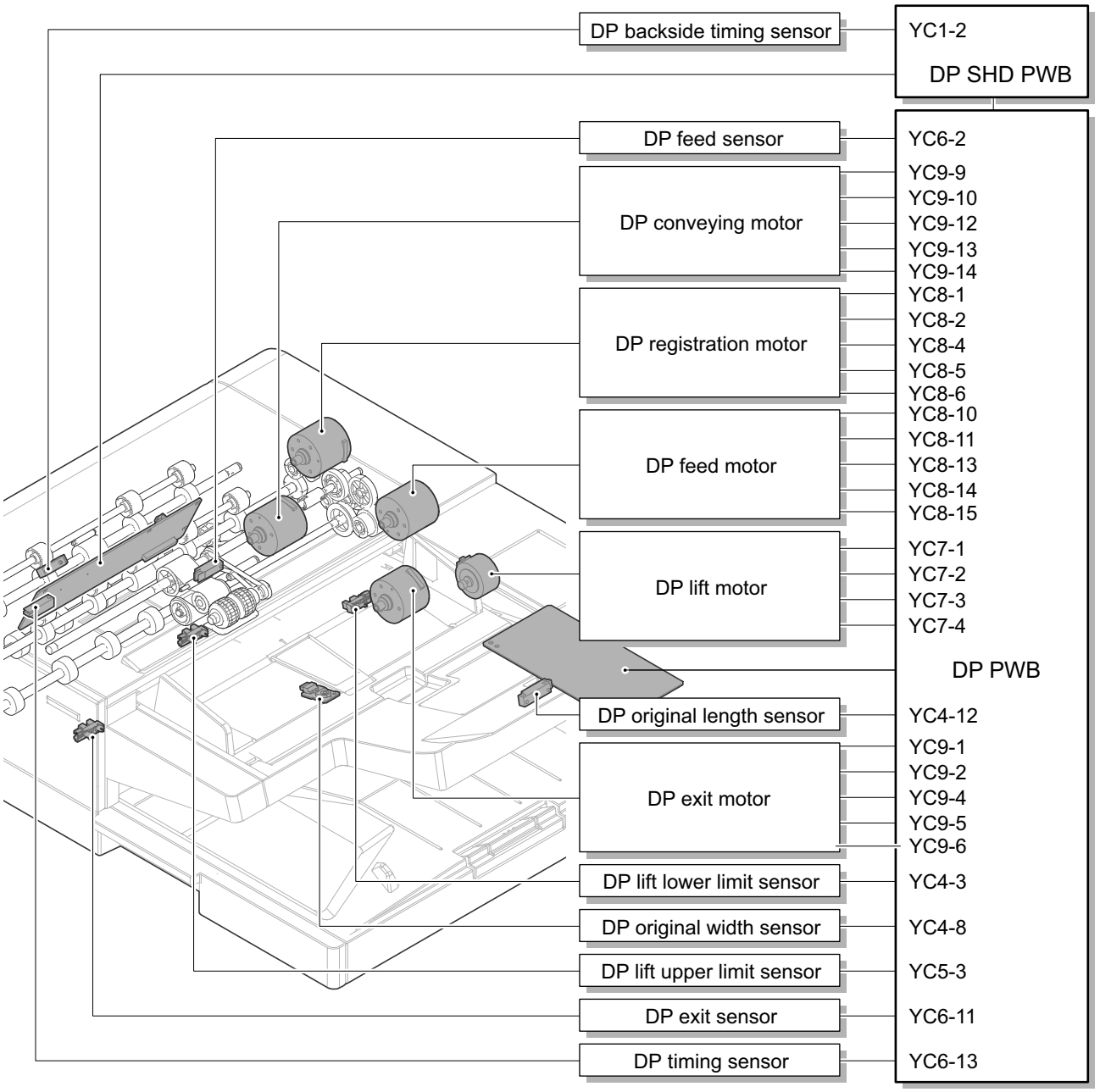

(6)Document processor (DP-7170)

(6-1)Original paper feed section

The original feed section consists of the parts in the figure, and conveys the original on the tray to the original conveying section. The original is fed by rotating the DP pickup roller and the DP feed belt.

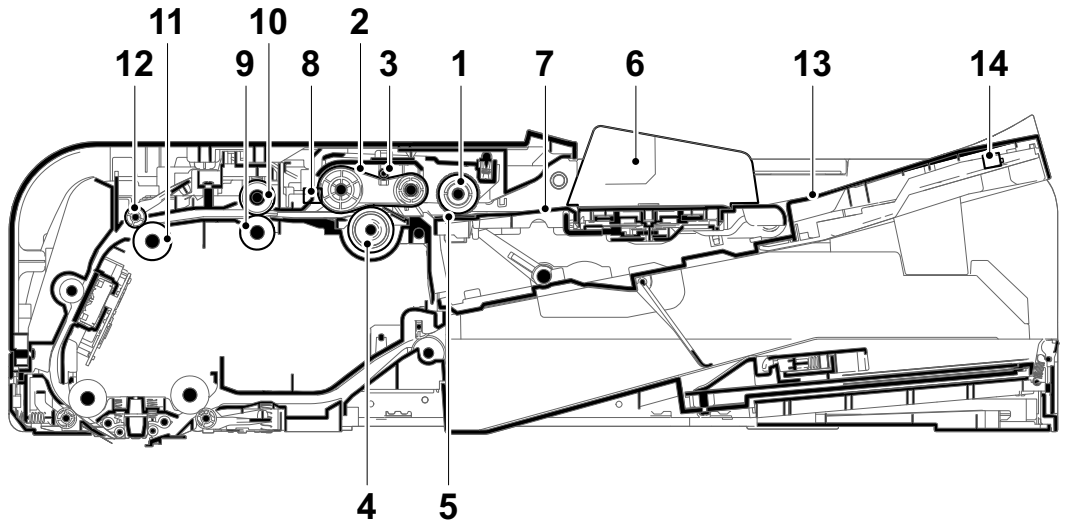

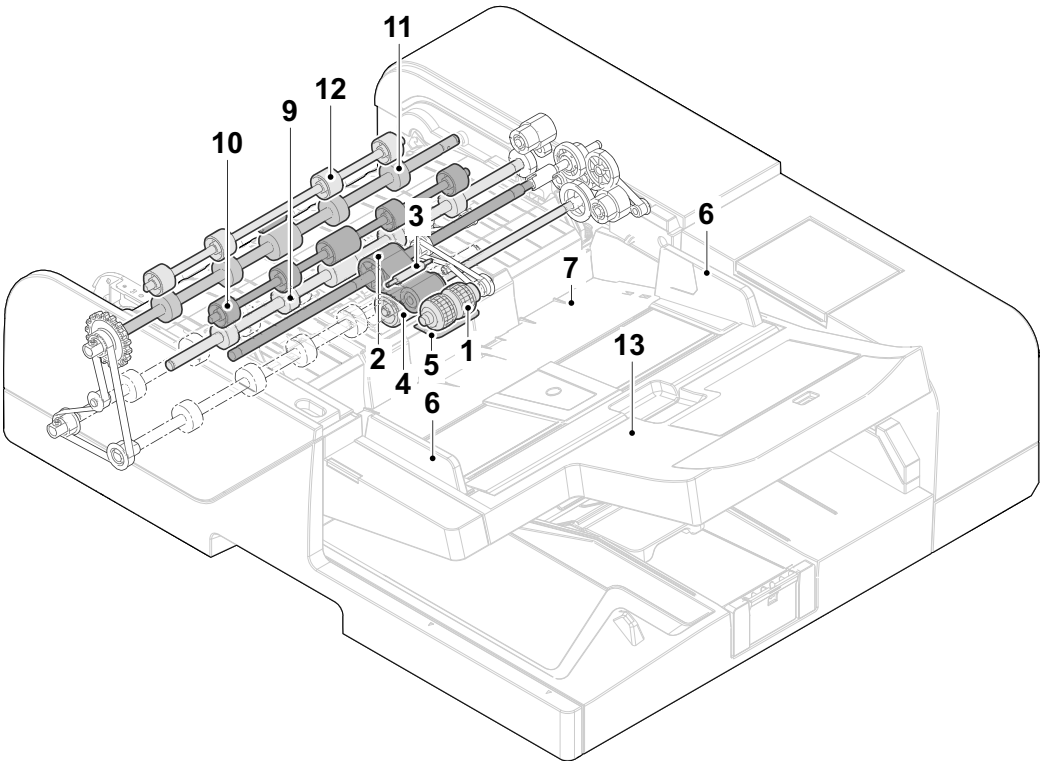

1.	Pickup roller	6.	DP original width guide	11.	DP conveying roller 1
2.	DP paper feed belt	7.	DP lift motor	12.	DP conveying pulley 1
3.	DP belt tension pulley	8.	DP paper feed sensor	13.	DP original tray
4.	DP retard roller	9.	DP registration roller	14.	DP original length sensor
5.	DF friction pad	10.	DP registration pulley		

(6-2)Original conveying section and exit/switching section

The original conveying section consists of the parts in the figure. The 2nd side of the conveyed original is scanned when it passes by the CIS and the 1st side is scanned at the optical section (image sensor) in the main unit when it passes by the DP slit glass. The original ,that is already scanned, is exit to the exit table by the exit roller.

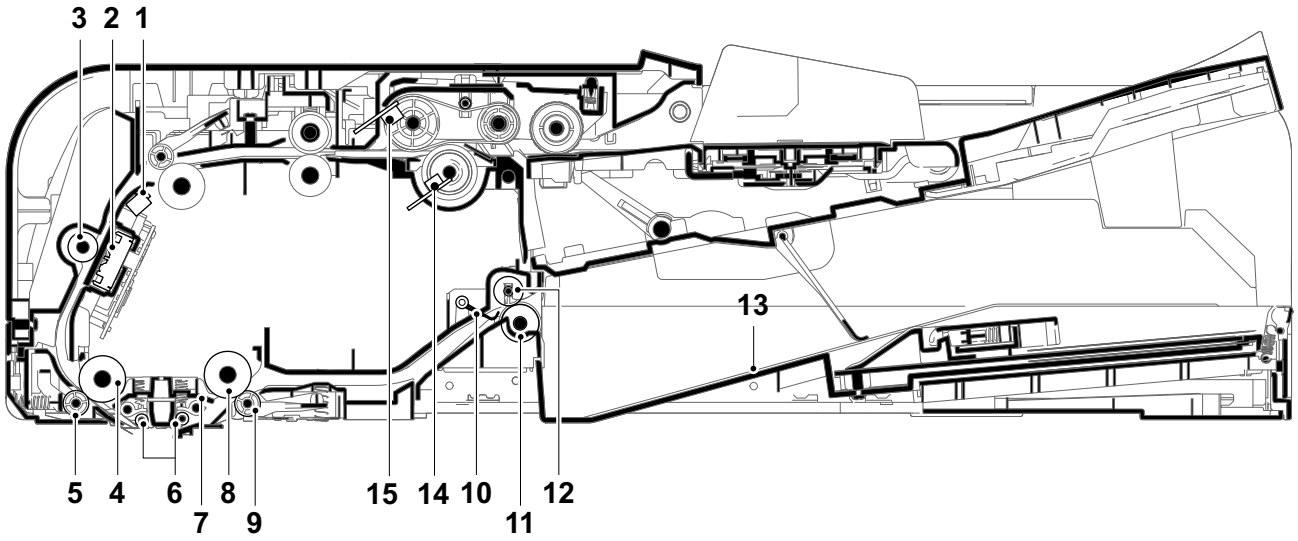

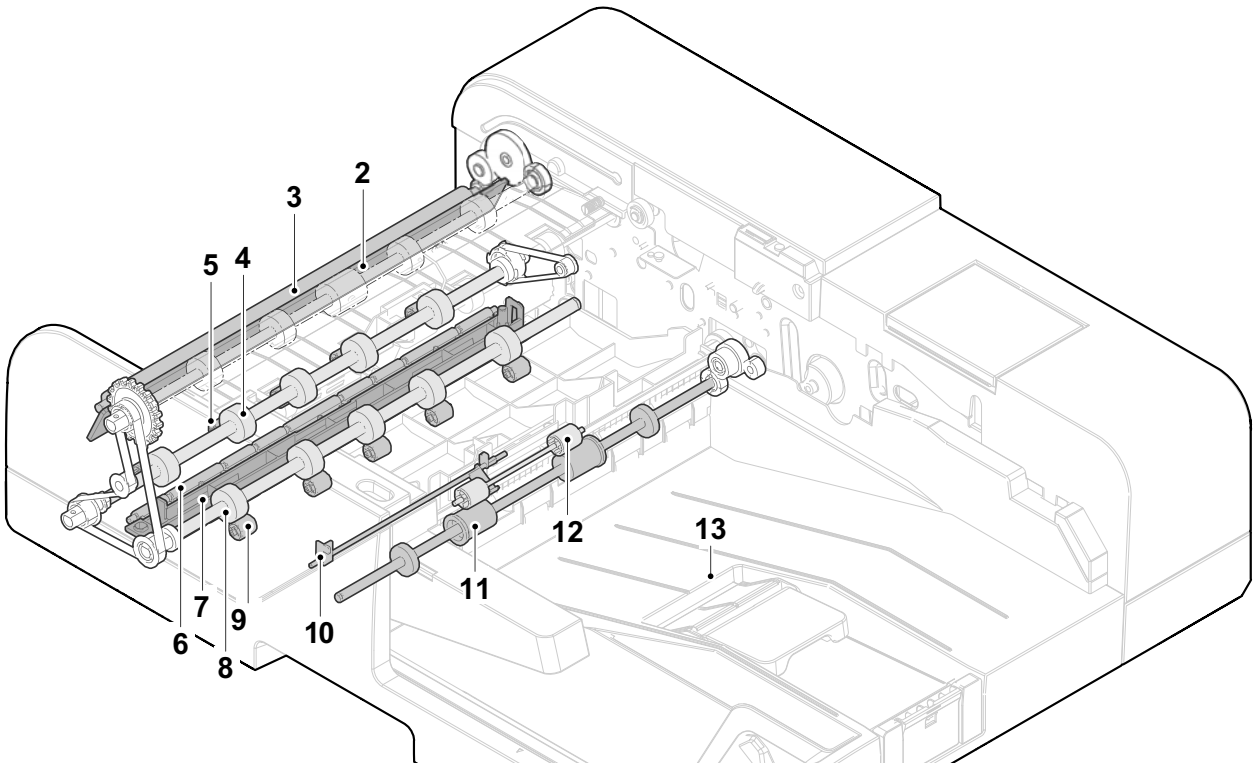

1.	DP backside timing sensor	6.	DP scanner guide pulley	11.	DP exit roller
2.	DPCIS	7.	DP reading guide	12.	DP exit pulley
3.	DPCIS roller	8.	DP conveying roller 3	13.	DP exit tray
4.	DP conveying roller 2	9.	DP conveying pulley 3	14.	DP multi feed sensor 1 (Emitter)
5.	DP conveying pulley 2	10.	DP actuator (DP exit sensor)	15.	DP multi feed sensor 2 (Receptor)

[Block diagram]

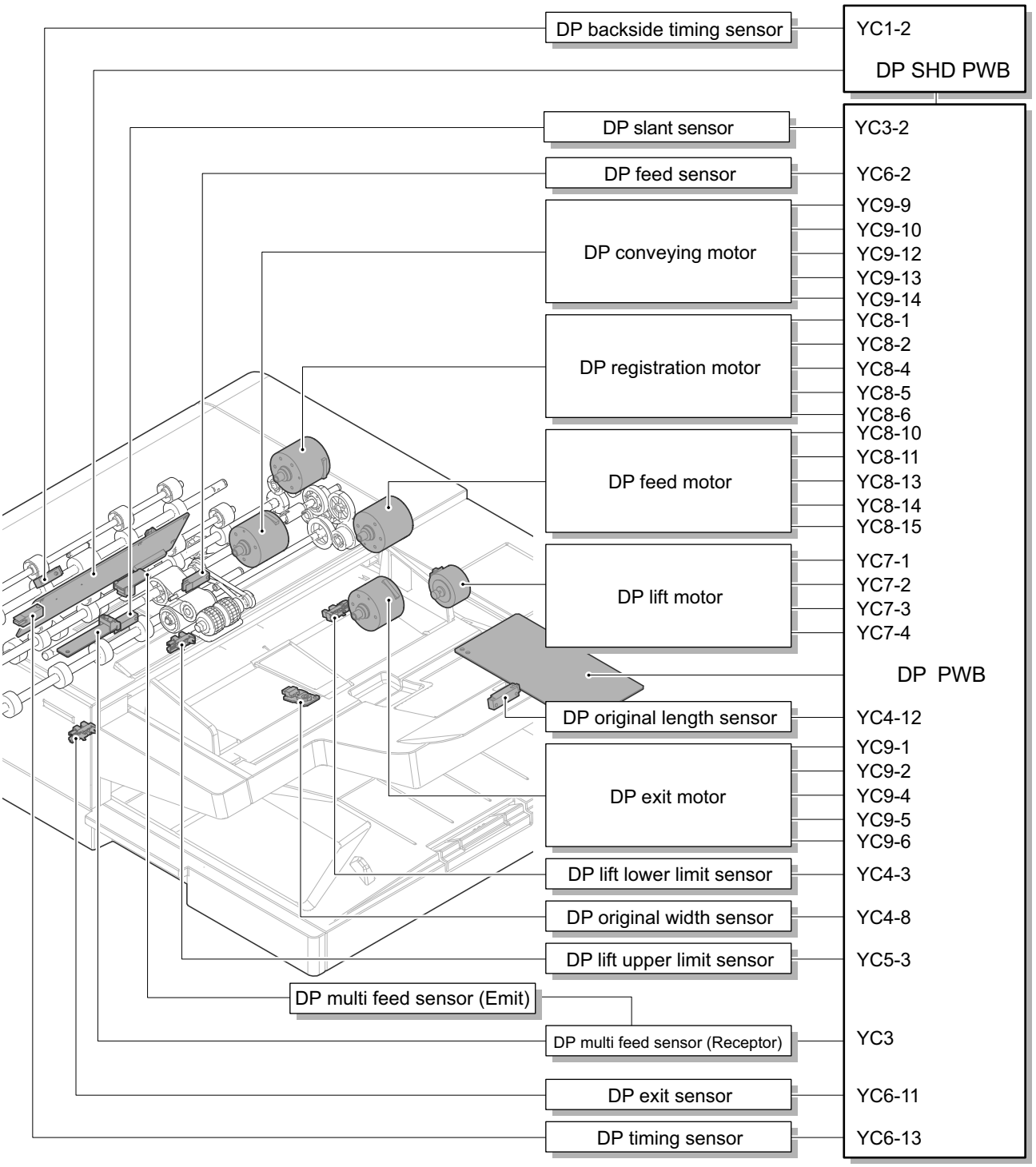

(7)Inner Finisher (DF-7100)

(7-1)Paper conveying section

The conveying section consists of the parts as shown below. Paper on the middle tray is transferred after adjusting the side registration by moving the DF side registration guides in the staple and sort modes.

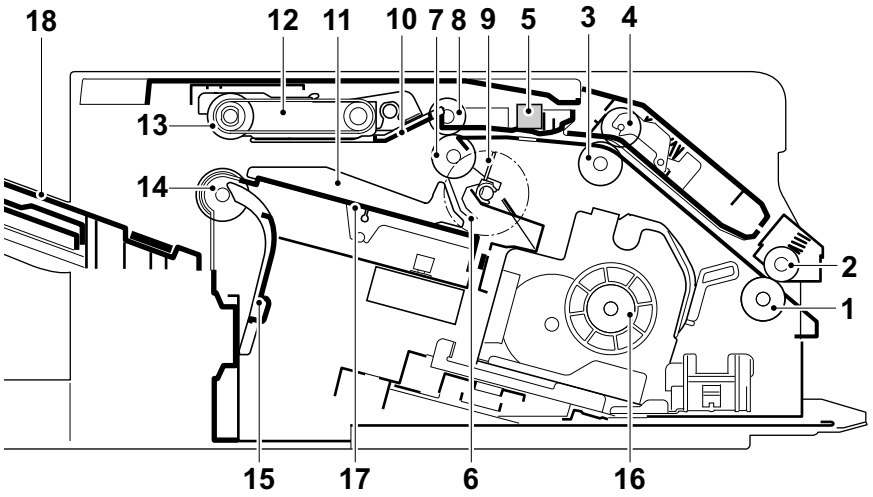

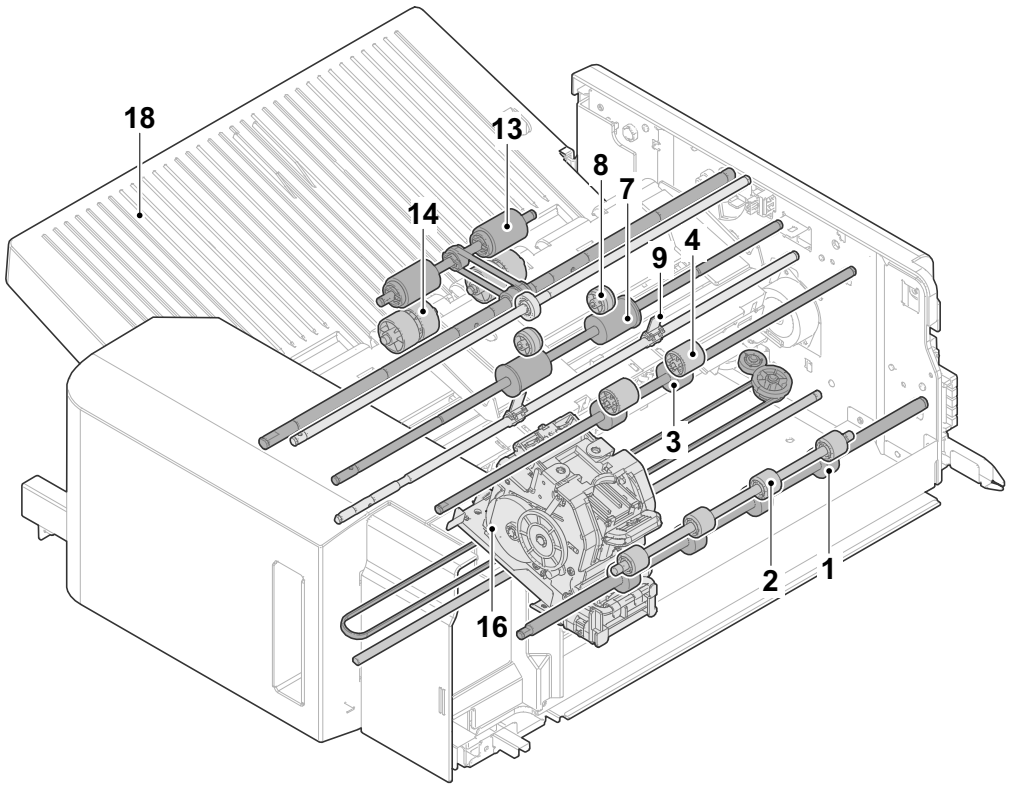

1.	DF entry roller	7.	DF Middle roller	13.	DF exit roller
2.	DF entry pulley	8.	DF Middle pulley	14.	DF exit pulley
3.	DF conveying roller	9.	DF paddle	15.	DF actuator (Paper press sensor)
4.	DF conveying pulley	10.	DF upper guide	16.	DF stapler
5.	DF entry sensor	11.	DF paper width guides	17.	DF middle tray
6.	DF paper stopper	12.	DF bundle exit unit	18.	DF tray

[Block diagram]

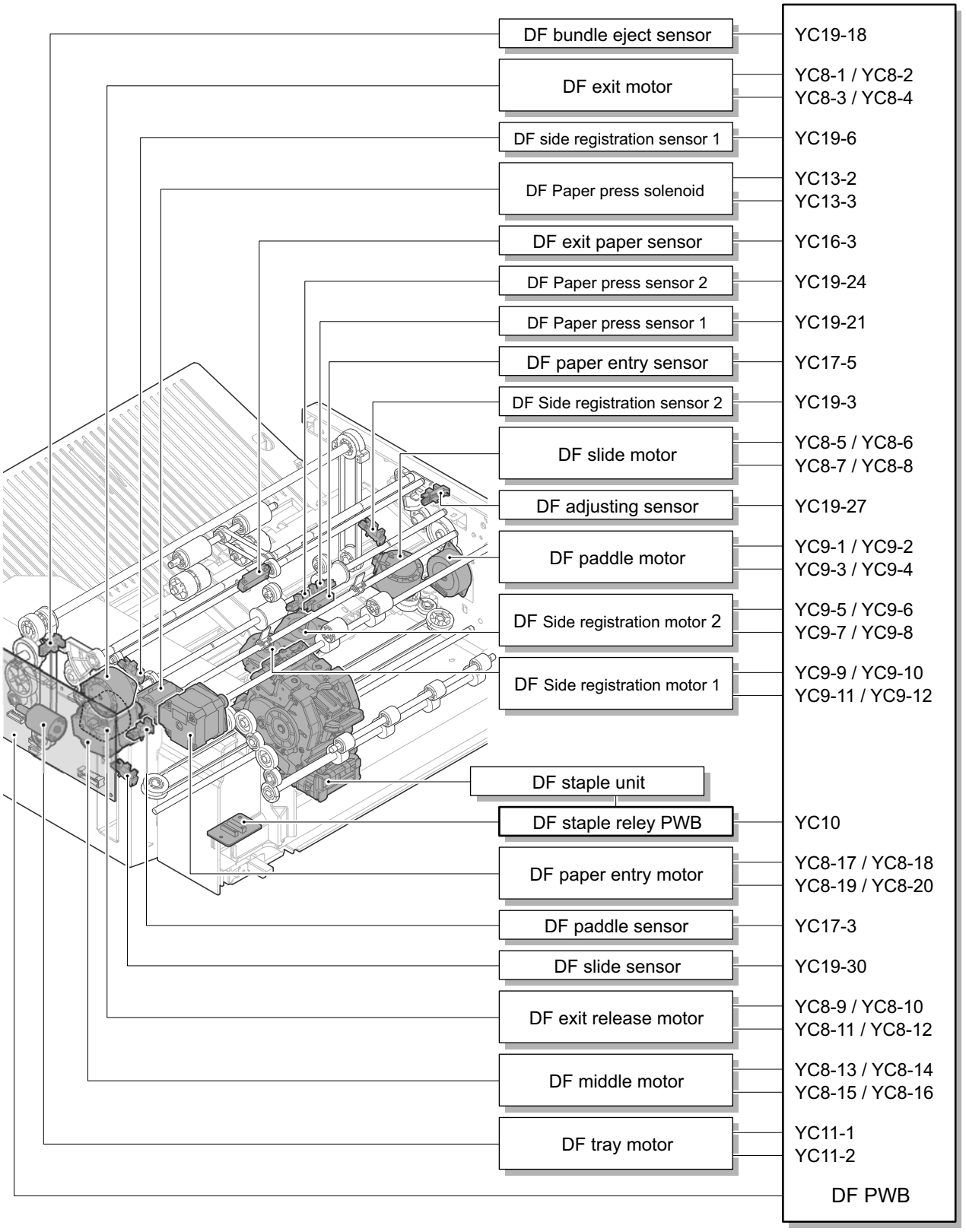

(7-2)Bundle exit operation

1st sheet

1 By rotating the DF entry roller and DF middle roller (a), paper is conveyed to the process section and then conveyed to the DF exit tray (b).

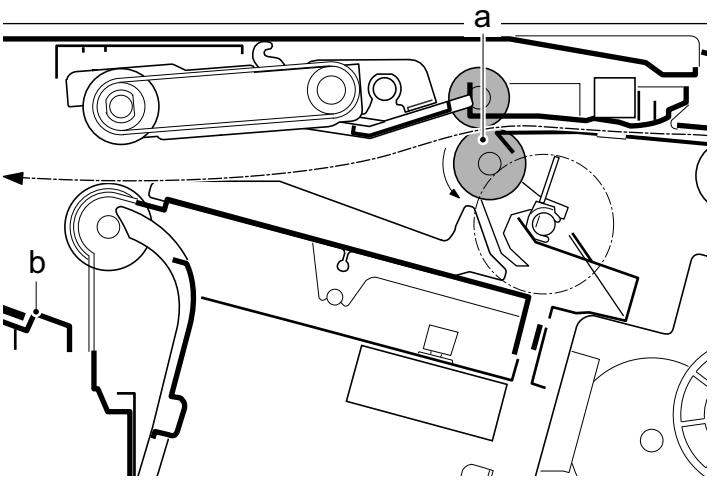

2 The DF bundle exit unit (b) and the DF upper guide (c) descends when the paper trailing edge passes the DF middle roller (a). Then, the DF exit roller (d) is rotated reversely and paper is sent to the DF middle tray (e).

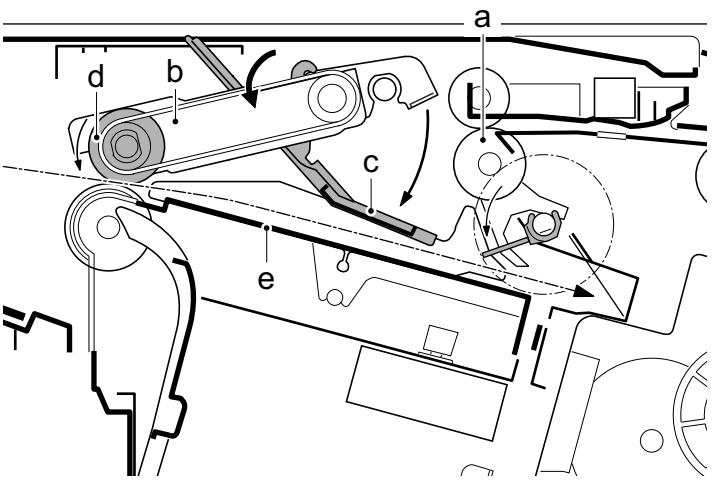

3 Then, the DF upper guide (a) ascends and the DF bundle exit unit (b) ascends by the DF exit release motor drive. By rotating the DF paddles(c), paper is conveyed to the DF middle tray (d). The DF side registration motor 1, 2 (e) drive the DF side registration guides (f) to adjust paper.

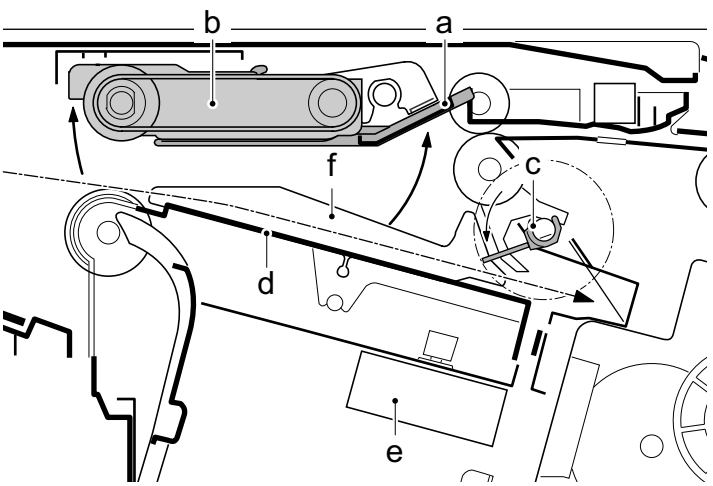

2nd sheet and after

4 By rotating the DF entry roller and DF middle roller (c), 2nd paper (b) is conveyed to the process section as the 1st sheet (a).

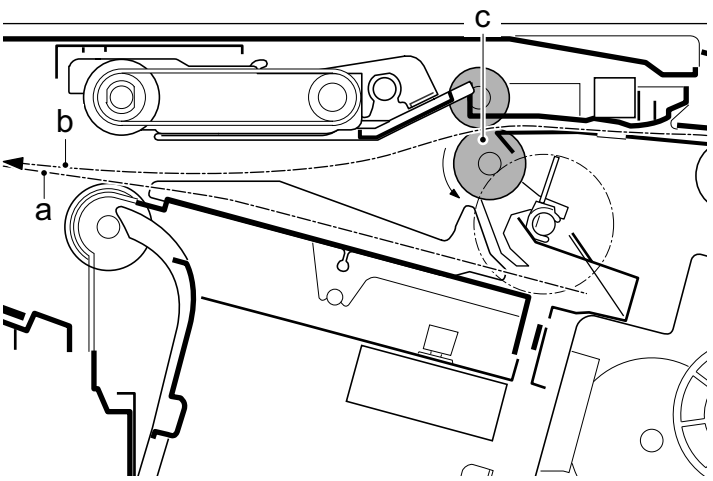

5 The DF bundle exit unit (b) descends and The DF upper guide (c) descends when the paper trailing edge passes the DF middle roller (a). Then, by rotating the DF exit roller (d) and the DF paddles (e), paper is conveyed to the DF middle tray (f). Paper is adjusted as well as the 1st sheet.

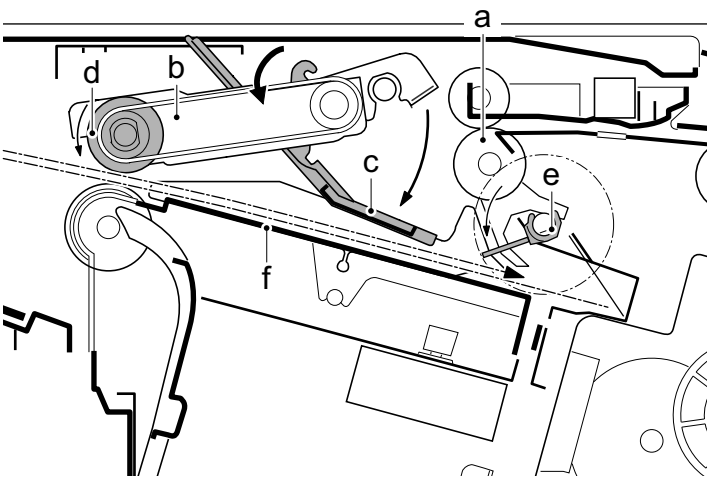

6 As completing to adjust the last sheet to bundle, the DF bundle exit unit (a) descends and by rotating the DF exit roller (b), the paper bundle (c) is exit to the DF exit tray (d).

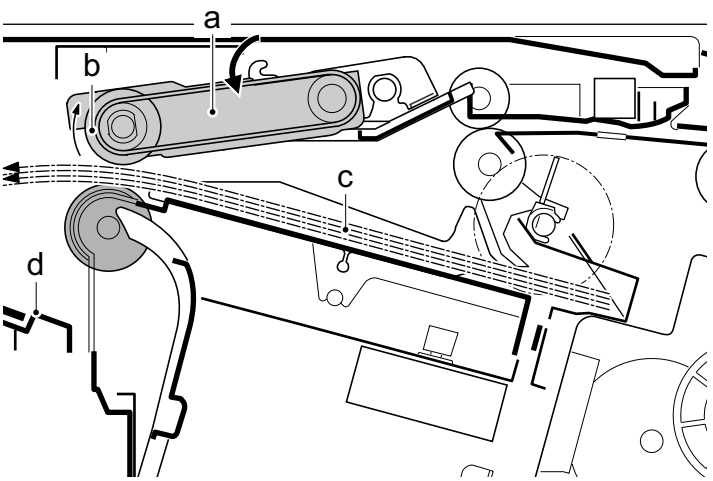

(8)4000-sheet Finisher (DF-7140)

(8-1)Paper entry/Feedshift/DF tray B exit section

The paper entry section convey paper from the main unit to the feedshift section. Also, the feedshift guide 3 switches the paper conveying path to convey paper to the DF tray B or finishing section.

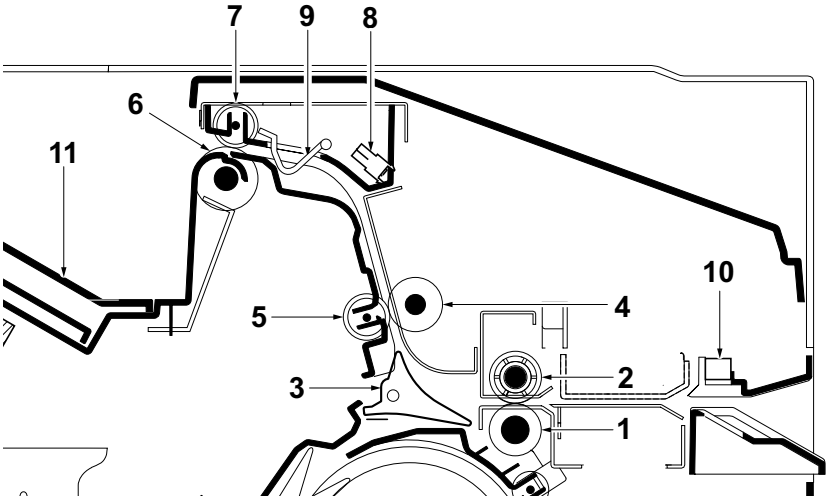

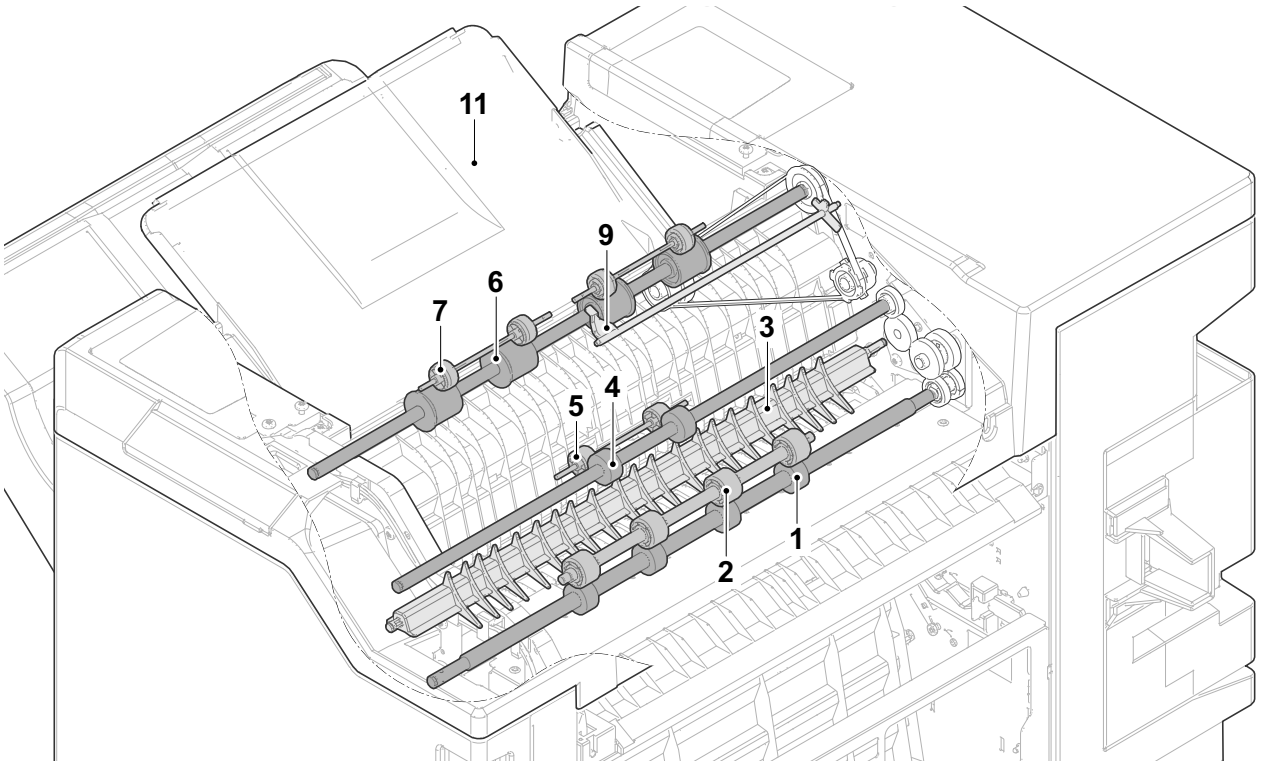

1.	DF entry roller	5.	DF conveying pulley	9.	DF actuator (DF sub exit sensor)
2.	DF entry pulley	6.	DF tray B exit roller	10.	DF entry sensor
3.	DF feedshift guide 3	7.	DF exit pulley	11.	DF tray B
4.	DF tray B conveying roller	8.	DF sub exit sensor		

[Block diagram]

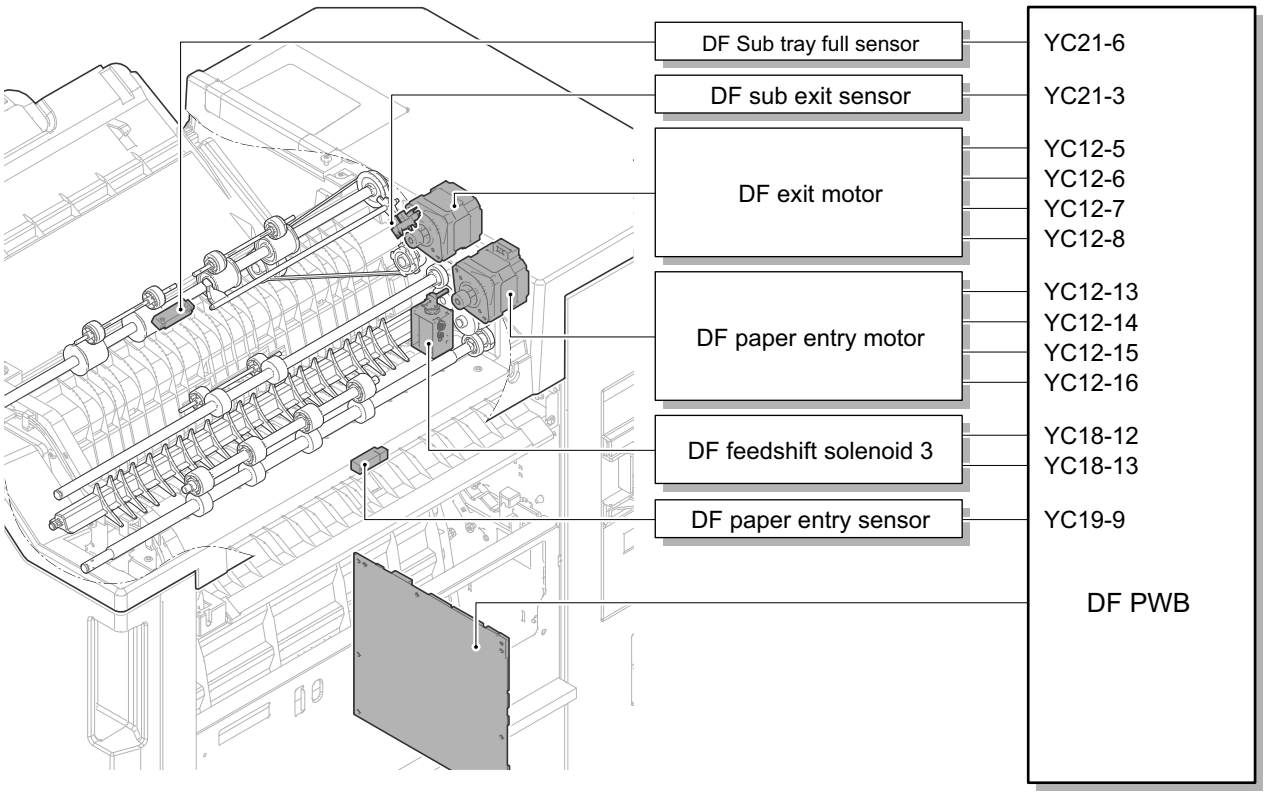

(8-2)Feedshift operation to the DF tray B or finishing section

The feedshift guide 3 (b) is activated by the DF feedshift solenoid 3 (a) and switches the paper conveying path for the paper conveyed to the feedshift section to exit it to the DF tray B (c) or to convey it to the feedshift section for the relief drum (d) or finishing section (e). Also, the DF sub exit sensor (f) detects paper jam at exit to the DF tray B (c).

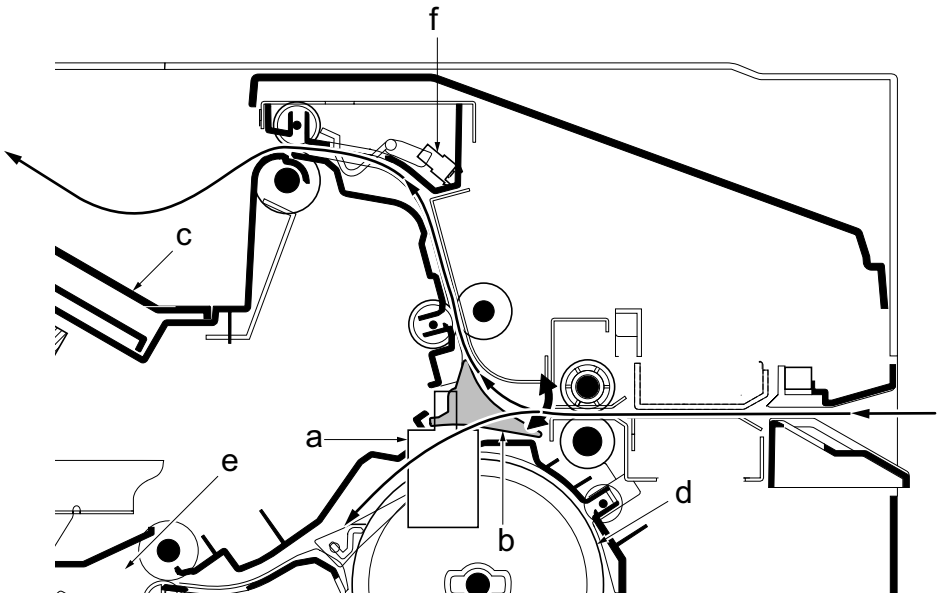

(8-3)Finishing section

The finishing section consists of the parts below and the paper conveyed from the main unit is exit to the DF tray A. Also, bundle exit mode and staple mode are processed.Also, for folding, switch the paper conveying path to the relief drum side by the feedshift guide 1.

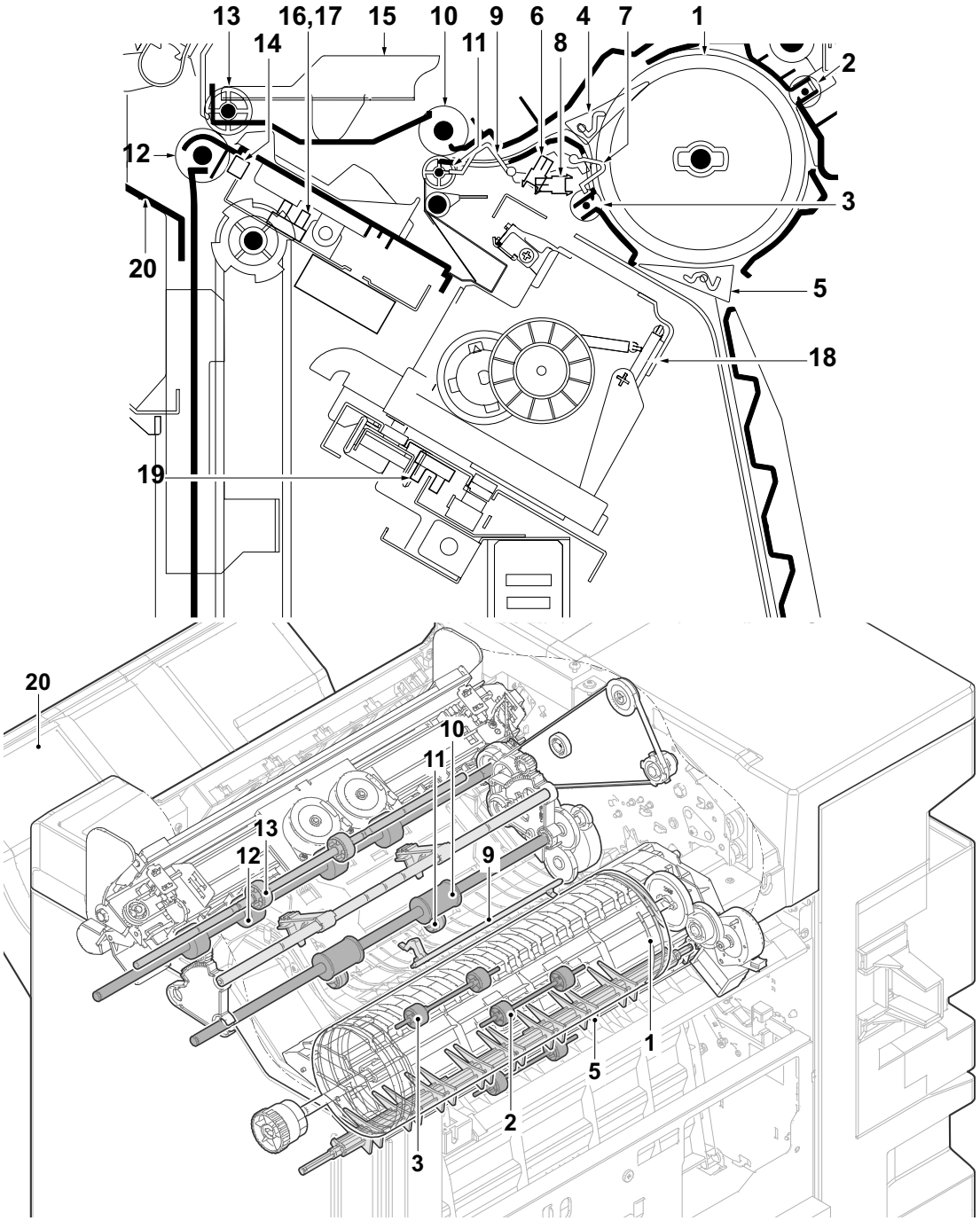

1.	DF relief drum	8.	DF middle sensor	15.	DF bundle exit unit
2.	DF conveying pulley	9.	DF actuator (DF middle sensor)	16.	DF side registration sensor 1
3.	DF conveying pulley	10.	DF Middle roller	17.	DF side registration sensor 2
4.	DF feedshift guide 1	11.	DF Middle pulley	18.	DF staple unit
5.	DF feedshift guide 2	12.	DF tray A exit roller	19.	DF slide sensor

6. DF drum sensor
7. DF actuator (DF drum sensor)
13. DF exit pulley
14. DF exit sensor
20. DF tray A

[Block diagram]

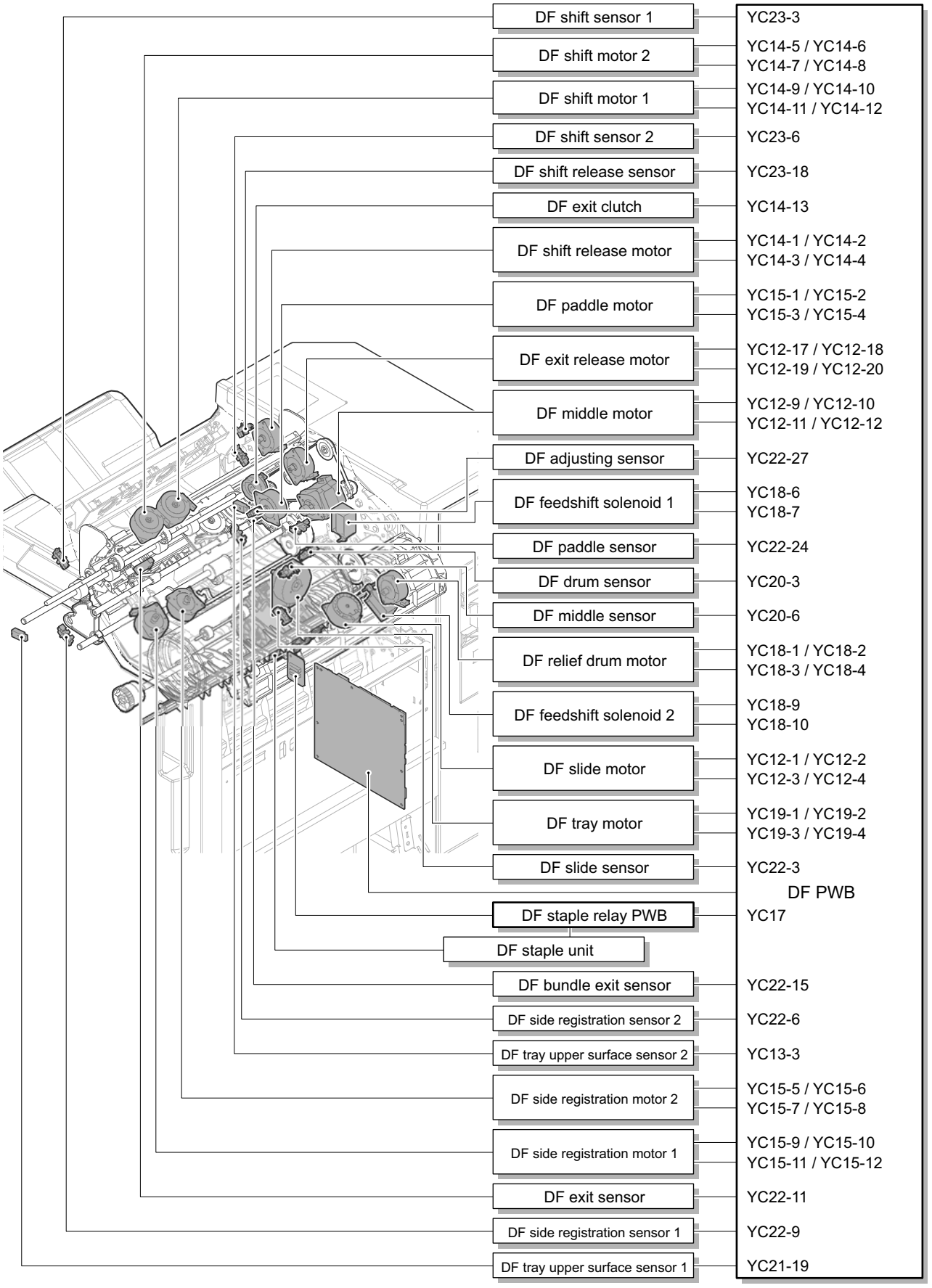

(8-4)Relief drum operation

As process multiple copies of A4 size paper to the finishing section or folding section, to secure the time to finish paper, the 1st and 2nd paper of the next group is relieved until the 3rd paper is conveyed.

1 The feed-shift guide 1 (b) is activated by the DF feed-shift solenoid 1 (a) and the conveying path for the conveyed paper is switched. The 1st paper of the next group is conveyed to the relief drum (c).

2 Likewise, 2nd paper of the next group is conveyed to the relief drum (c).

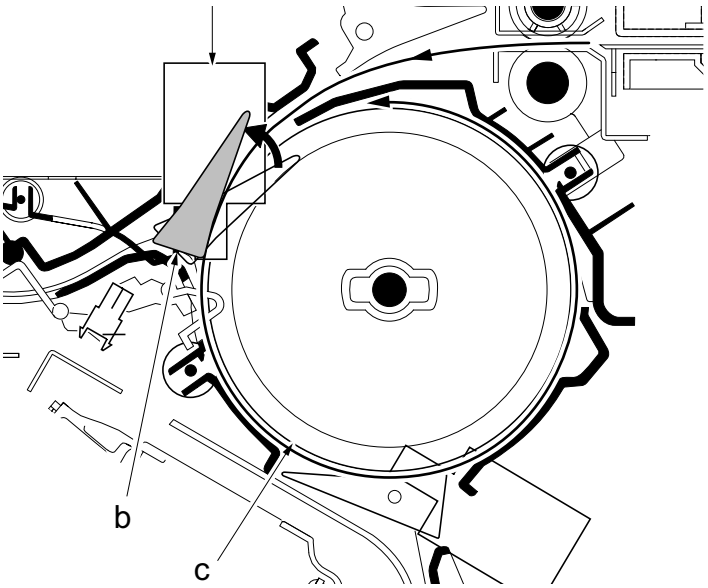

3 When the 3rd paper of the next group is conveyed into the relief drum, it is conveyed to the finishing section (a) with the 1st and 2nd paper. Then, the paper conveying path is switched by the feed-shift guide 1 (b).

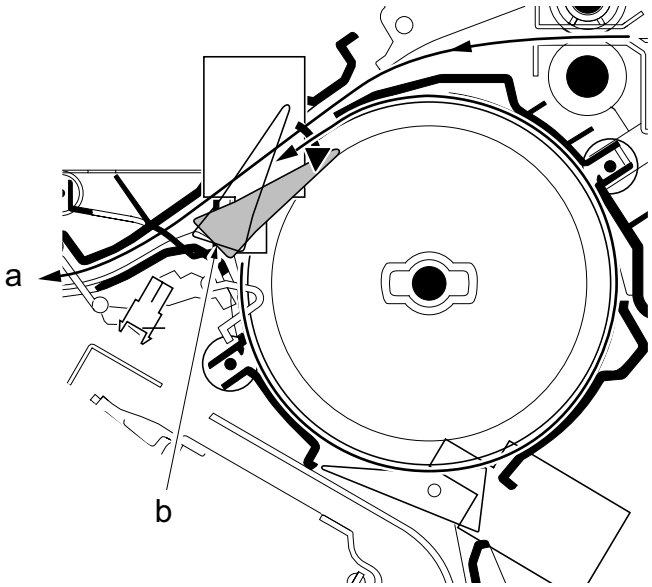

4 The DF feedshift solenoid 2 (b) activates the feedshift guide 2 (c) and it switches the paper conveying path to convey paper to the folding unit (a).

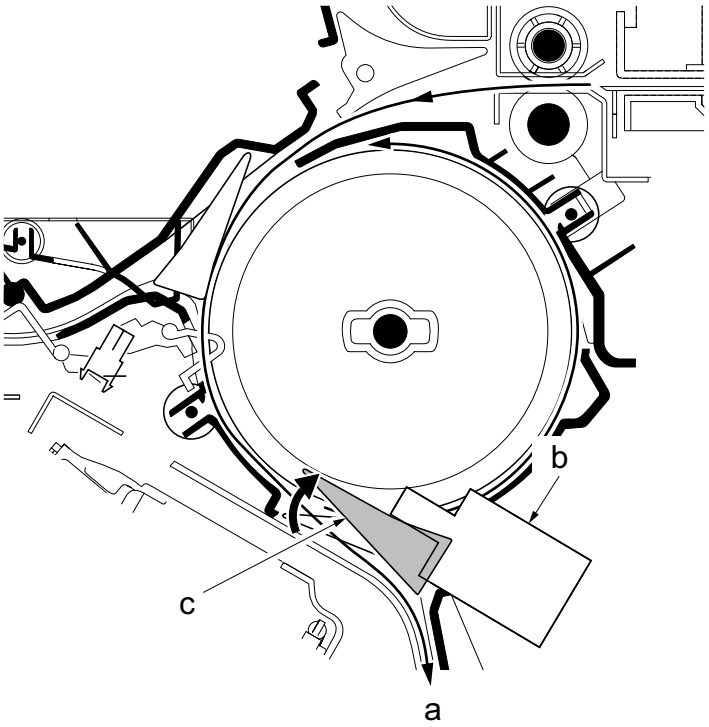

(8-5)Bundle exit operation

1st sheet

1 By rotating the middle roller (a), paper is conveyed to the process section.
Paper is conveyed to the DF tray A (c) by the DF tray A exit roller (b).

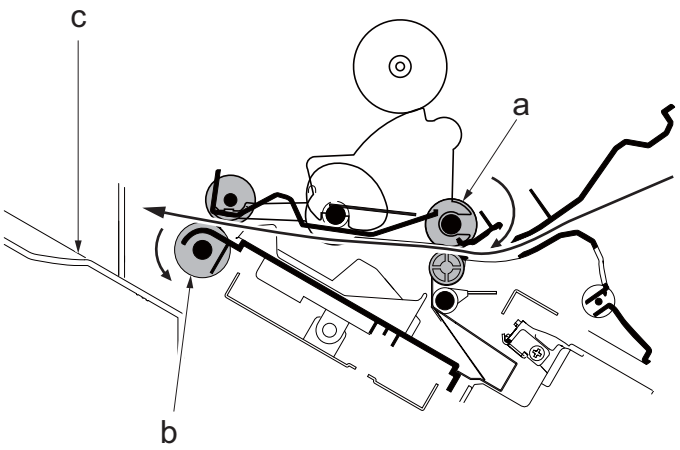

2 The conveying guide (d) descends when the paper trailing edge passes the middle roller (a). Then, the DF tray A exit roller (b) is rotated reversely and paper is sent to the adjusting tray (e).

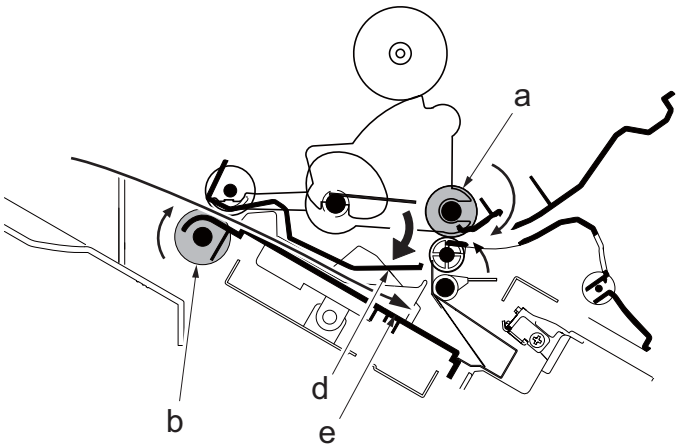

3 Then, the paper conveying guide (d) ascends and the bundle exit unit (g) ascends by the DF exit release motor (f) drive.
By rotating the DF tray A exit roller (b) and adjusting paddles (h), paper is conveyed to the adjusting tray (i).
The DF side registration motor 1, 2 (j) drive the adjusting guides (k) to adjust paper.

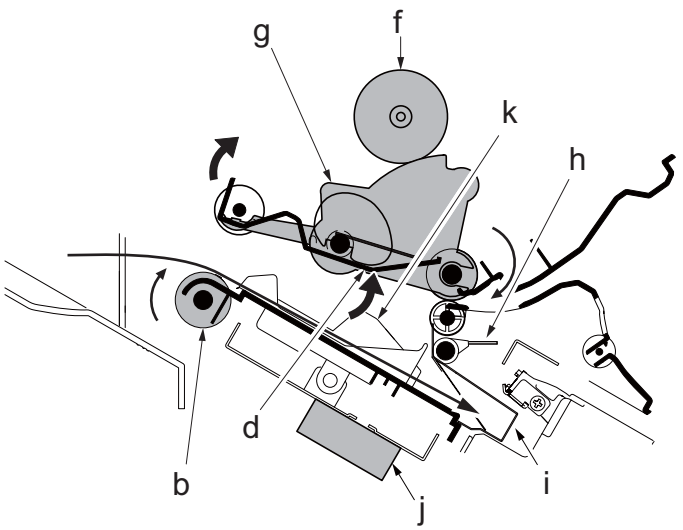

2nd sheet and after

4 By rotating the DF entry roller and DF middle roller (c), 2nd paper (b) is conveyed to the process section as the 1st sheet (a).

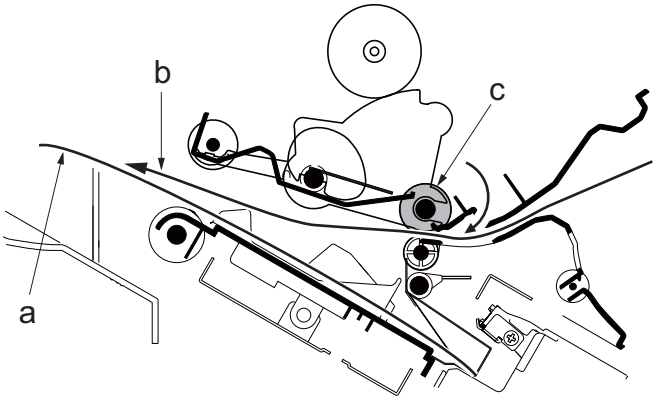

5 The conveying guide (d) descends when the paper trailing edge passes the DF middle roller (c). Then, by rotating the paddles (e) and the adjusting paddles (f), paper is conveyed to the adjusting tray (g). Paper is adjusted as well as the 1st sheet.

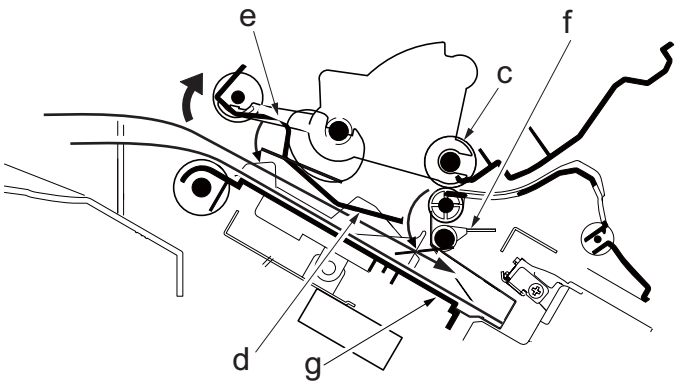

6 When adjusting the last paper of bundle is complete, the bundle exit unit (h) descends and the DF tray A exit roller (i) rotates to exit the paper bundle to the DF tray A (j).

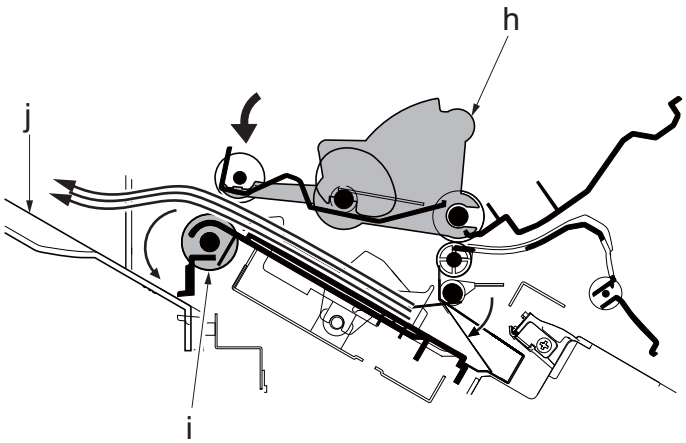

(9)1000-sheet Finisher (DF-7120)

(9-1)Finishing section

The finishing section consists of the parts below and the paper conveyed from the main unit is exit to the exit tray. Also, bundle exit mode and staple mode are processed.

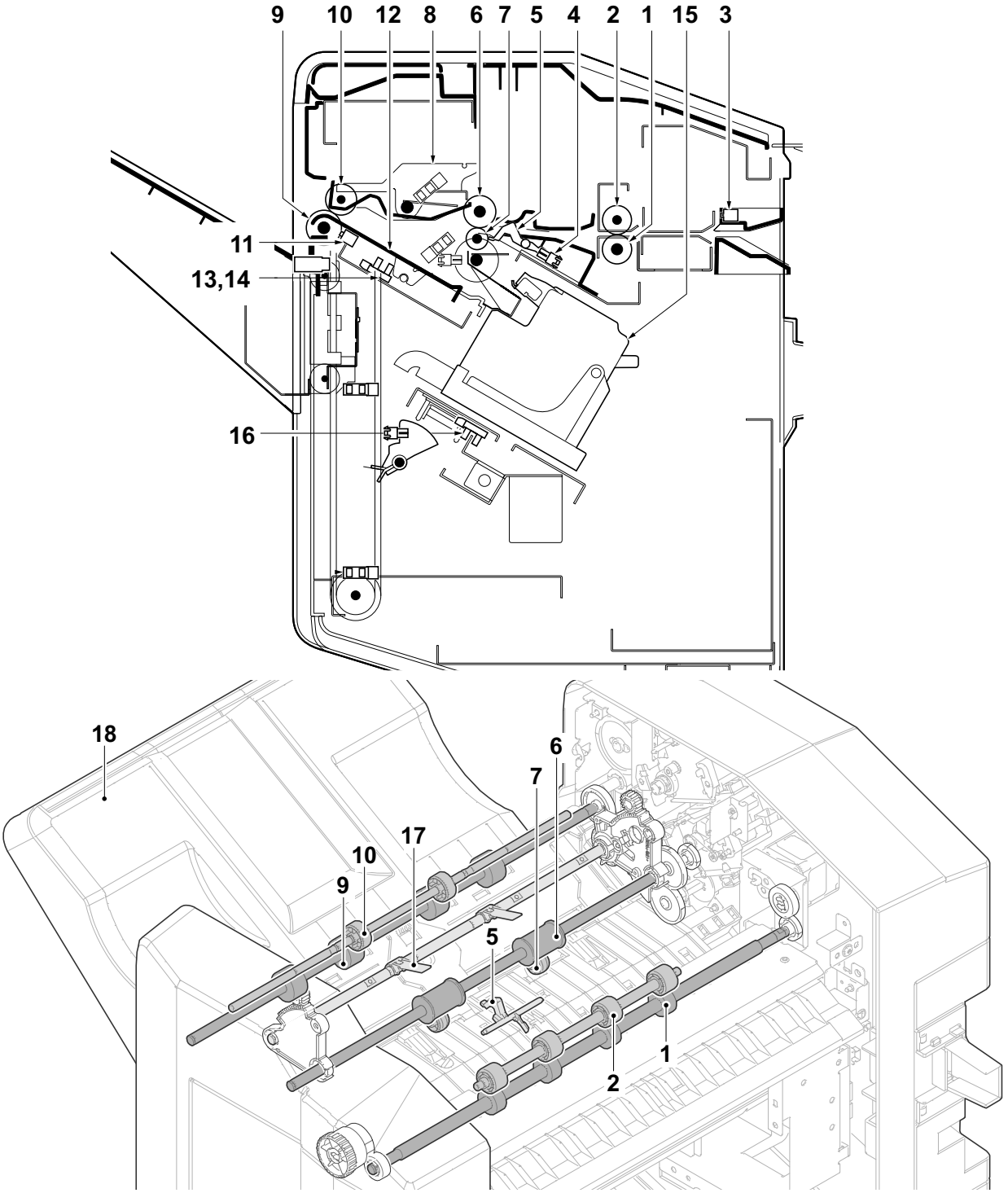

1.	DF entry roller	7.	DF Middle pulley	13.	DF side registration sensor 1
2.	DF entry pulley	8.	DF bundle exit unit	14.	DF side registration sensor 2
3.	DF entry sensor	9.	DF exit roller	15.	DF staple unit
4.	DF middle sensor	10.	DF exit pulley	16.	DF slide sensor
5.	DF actuator (DF middle sensor)	11.	DF exit sensor	17.	DF paddle
6.	DF Middle roller	12.	DF adjusting tray	18.	DF tray

[Block diagram]

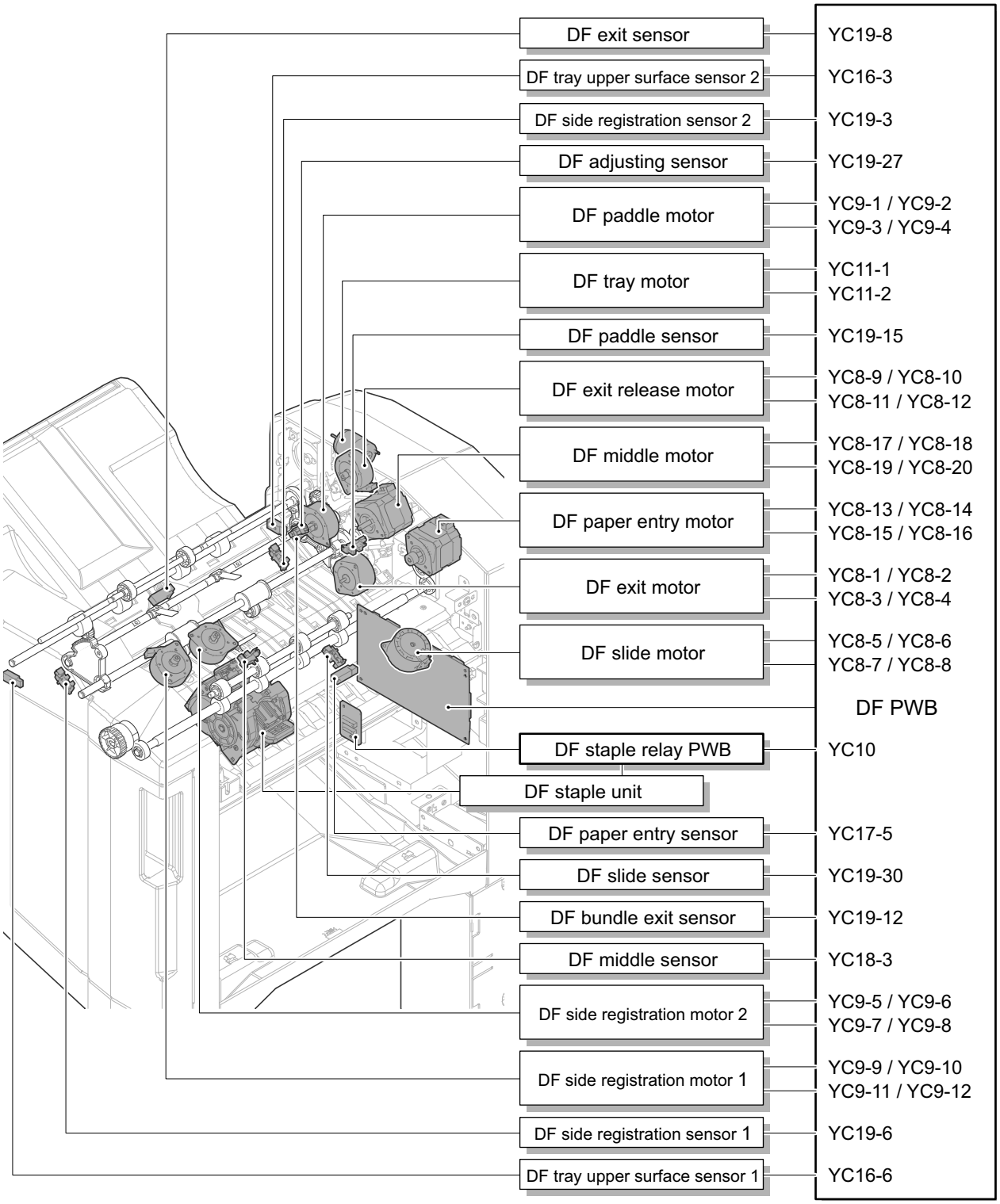

(9-2)Bundle exit operation

1st sheet

1 By rotating the DF entry roller (a) and DF middle roller (b), paper is conveyed to the process section. Paper is conveyed to the DF main tray (d) by the exit roller (c).

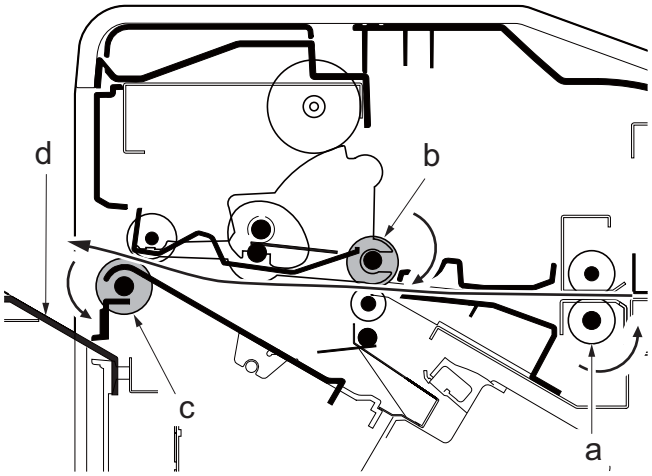

2 The conveying guide (e) descends when the paper trailing edge passes the middle roller (b). Then, the exit roller (c) rotates reversely and paper is sent to the adjusting tray.

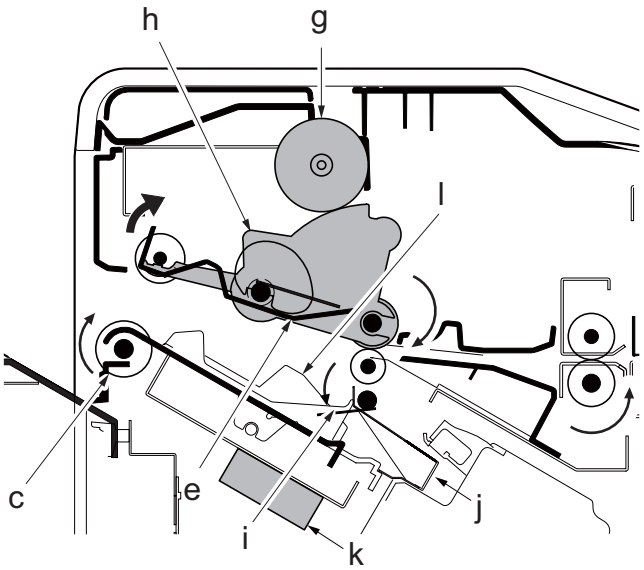

3 Then, the conveying guide (e) ascends and the bundle exit unit (h) ascends by the DF exit release motor (g) drive.

By rotating the exit roller (c) and adjusting paddles (i), paper is conveyed to the side (j) of the adjusting tray (f).
The DF side registration motor 1, 2 (k) drive the adjusting guides (l) to adjust paper.

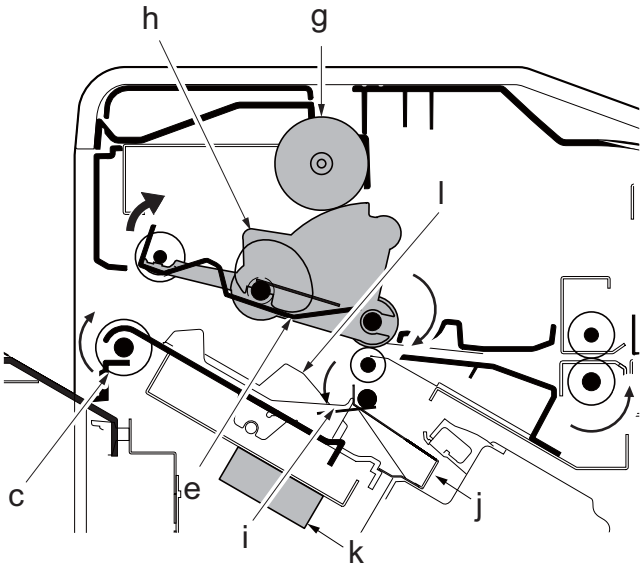

2nd sheet and after

4 By rotating the DF entry roller (c) and DF middle roller (d), 2nd paper (b) is conveyed to the process section as the 1st sheet (a).

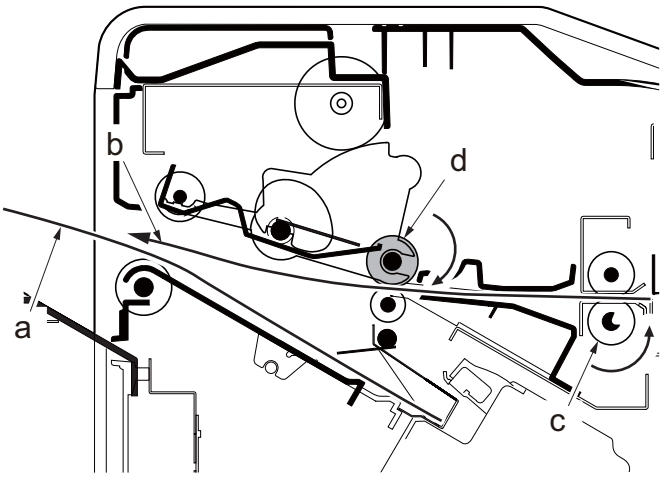

5 The conveying guide (e) descends when the paper trailing edge passes the middle roller (d). Then, by rotating the paddles (f) and the adjusting paddles (g), paper is conveyed to the adjusting tray (h). Paper is adjusted as well as the 1st sheet.

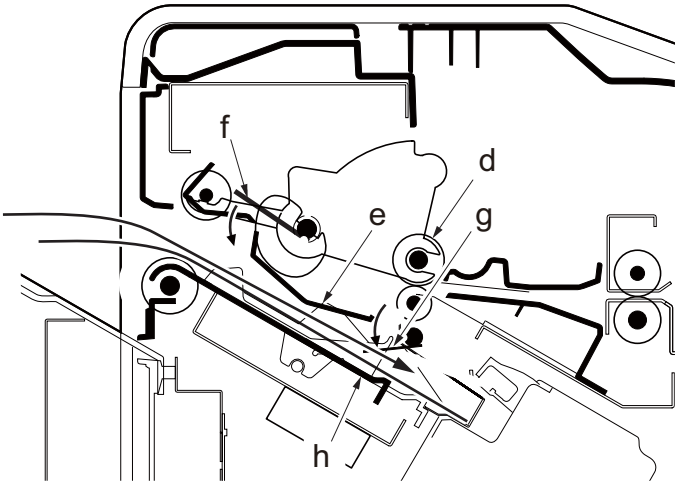

6 As completing to adjust the last sheet to bundle, the bundle exit unit (i) descends and by rotating the main tray exit roller (j), the paper bundle is exit to the DF main tray (k).

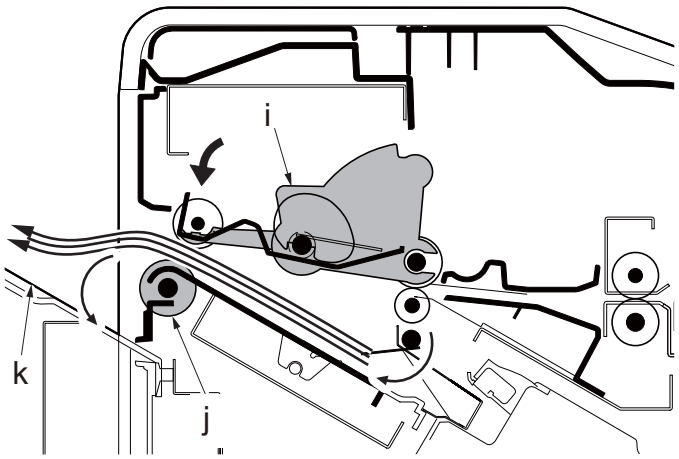

(10)Mailbox (MT-730(B))

The mailbox exits paper to the designated tray 1 to 7 and stack.

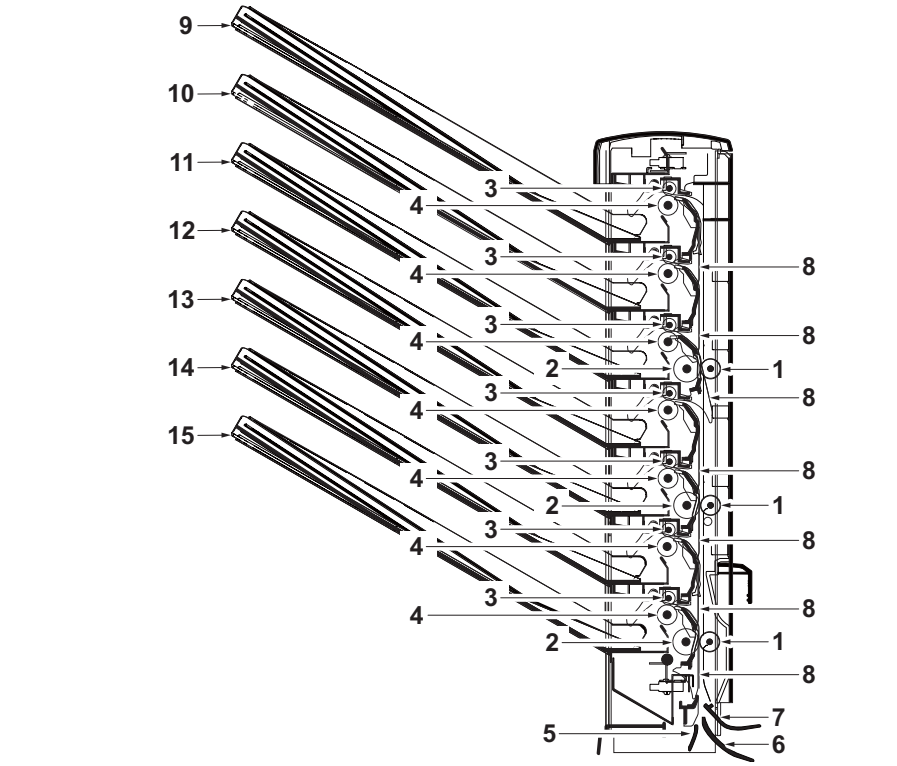

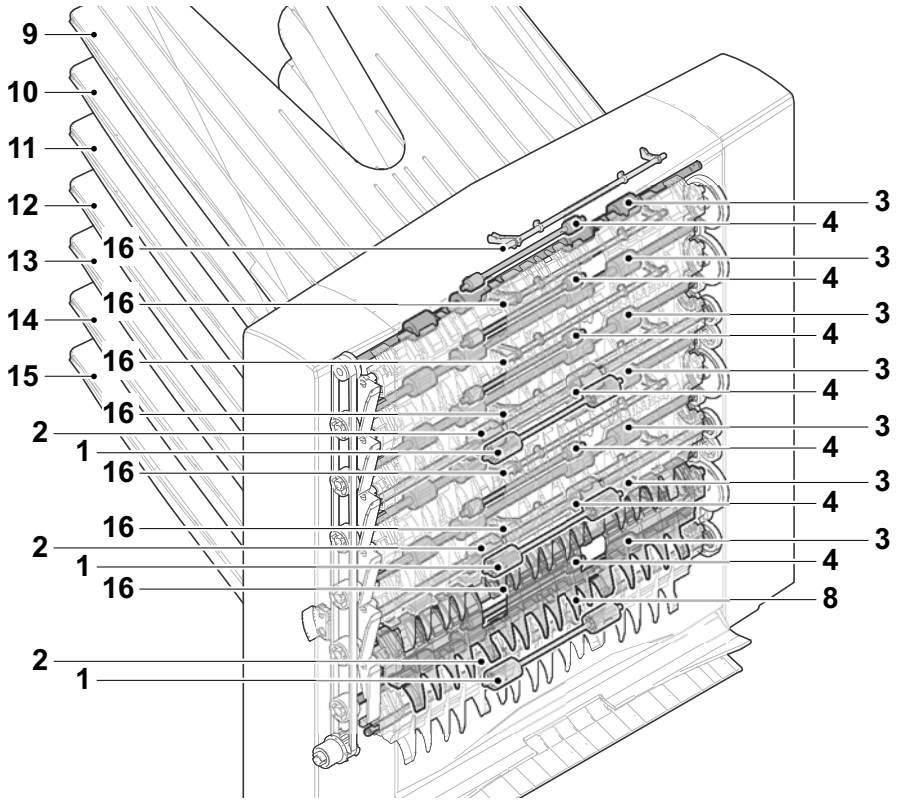

1.	MT conveying pulley	7.	MT upper entry guide	13.	MT tray 5
2.	MT conveying roller	8.	MT separation	14.	MT tray 6
3.	MT exit pulley	9.	MT tray 1	15.	MT tray 7
4.	MT exit roller	10.	MT tray 2	16.	MT actuator (MT overflow sensor)
5.	MT lower entry guide	11.	MT tray 3		
6.	MT middle entry guide	12.	MT tray 4		

[Block diagram]

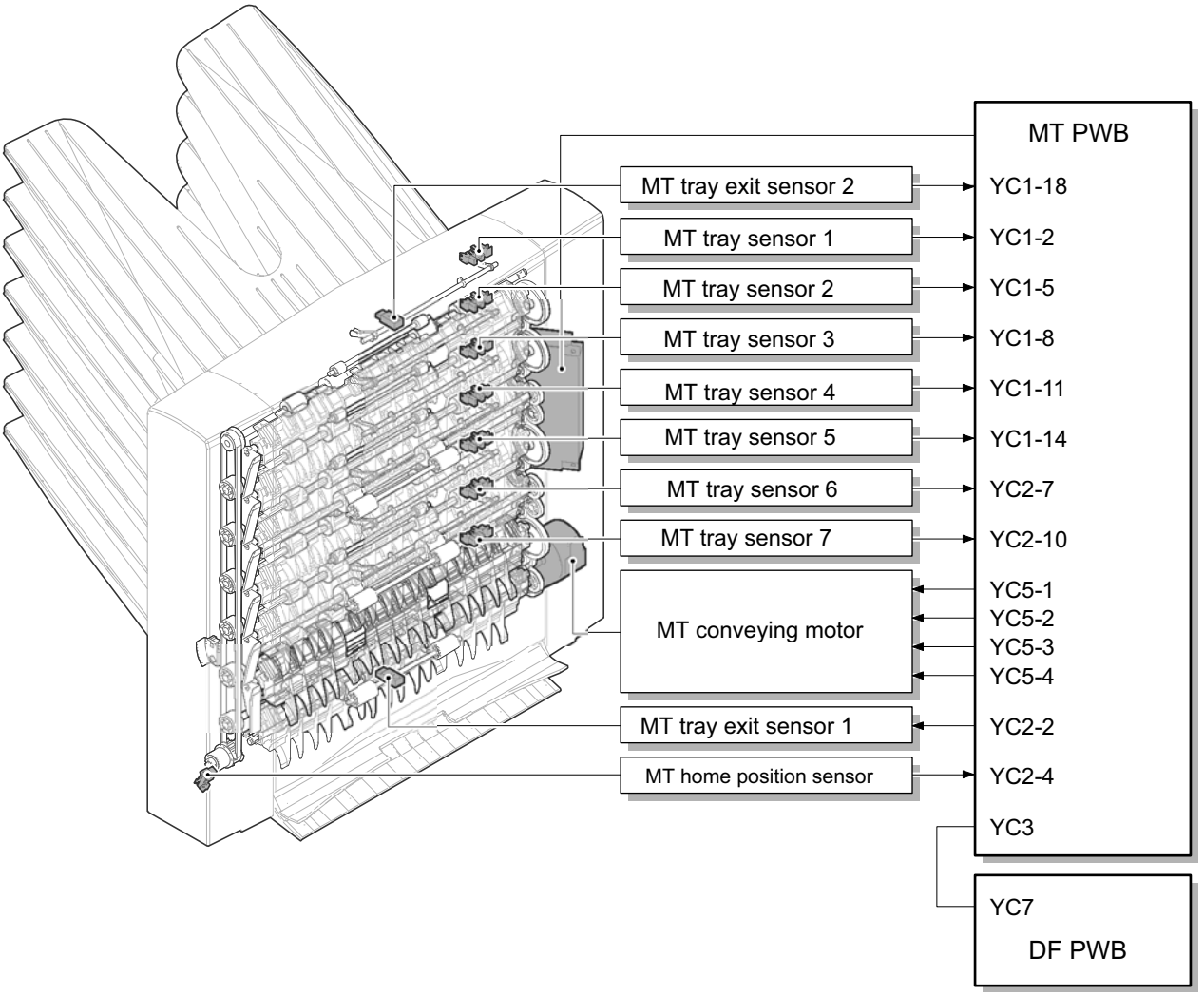

(10-1)Output to the mailbox tray

Belt support plate (b) moves on the belt (a) and passes the feedshift nail lever (c), the feedshift nail (d) switches the conveying path to exit to each tray. Also, the MT tray exit sensor (d) detects paper jam.

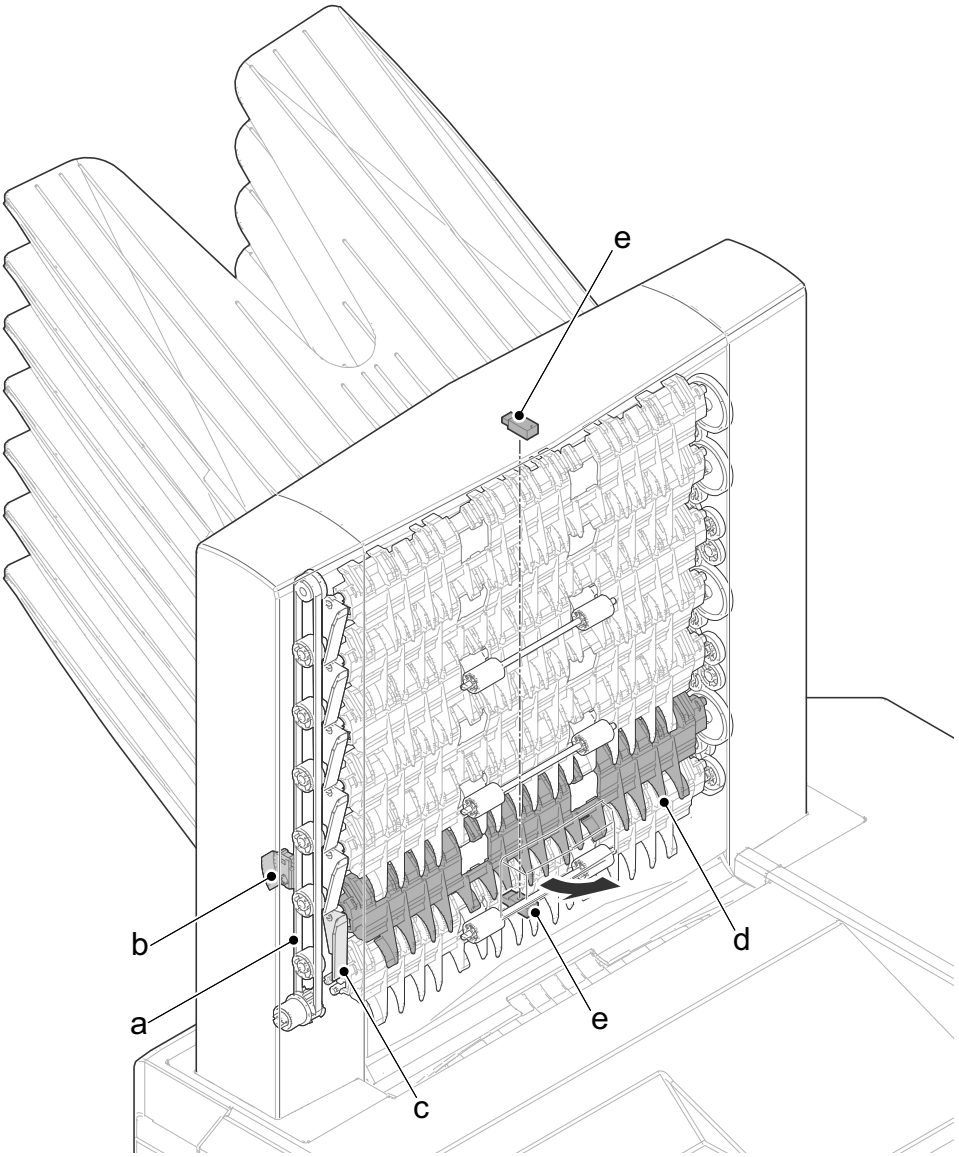

(11)Punch unit (PH-7)

The punch unit is installed at the paper entry section of the document finisher and has paper stop and make punch holes.

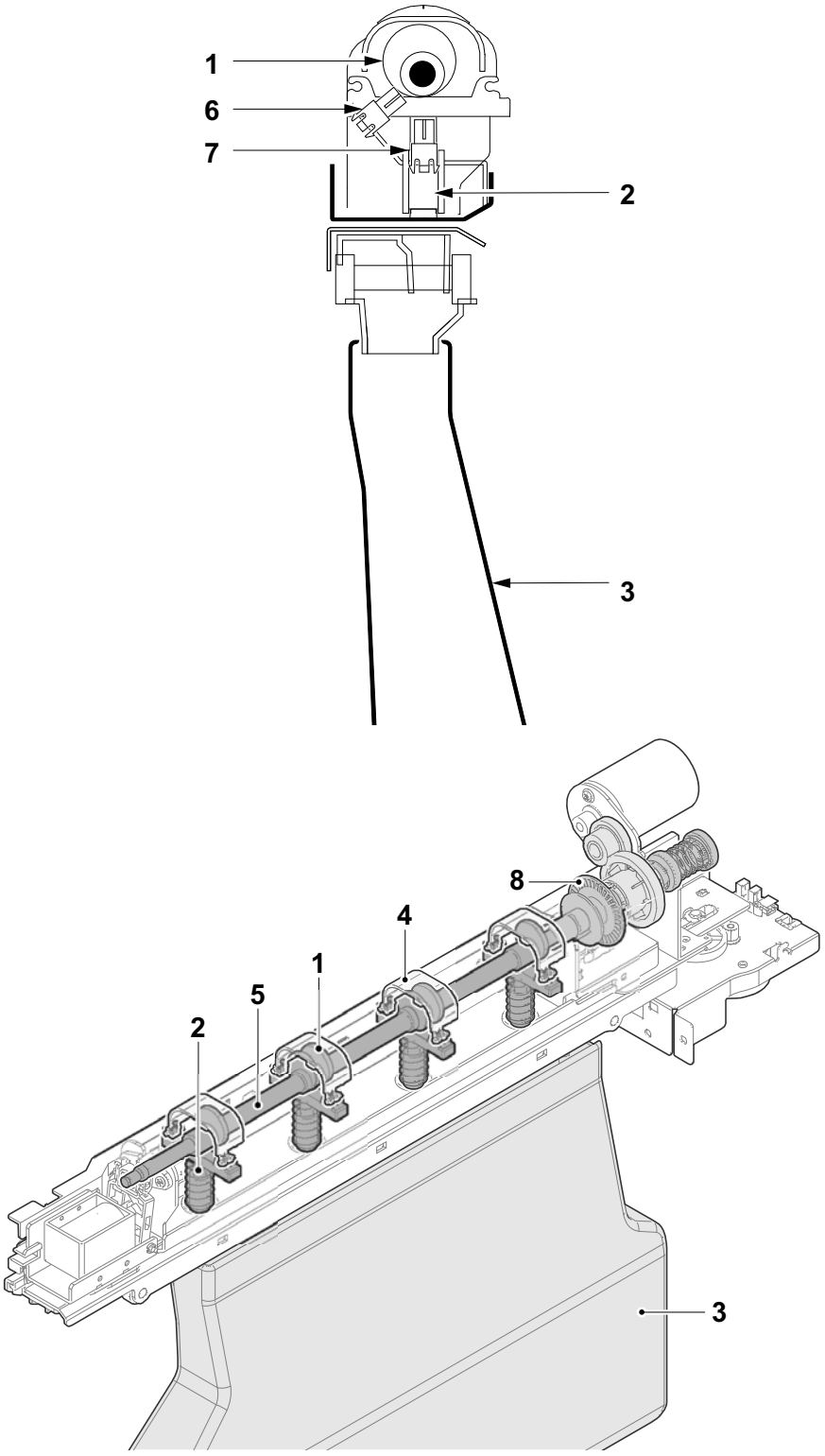

1.	PH cam	5.	PH cam shaft
2.	PH cutter	6.	PH home position sensor
3.	PH dust tank	7.	PH pulse sensor
4.	PH cutter holder	8.	PH pulse plate

[Block diagram]

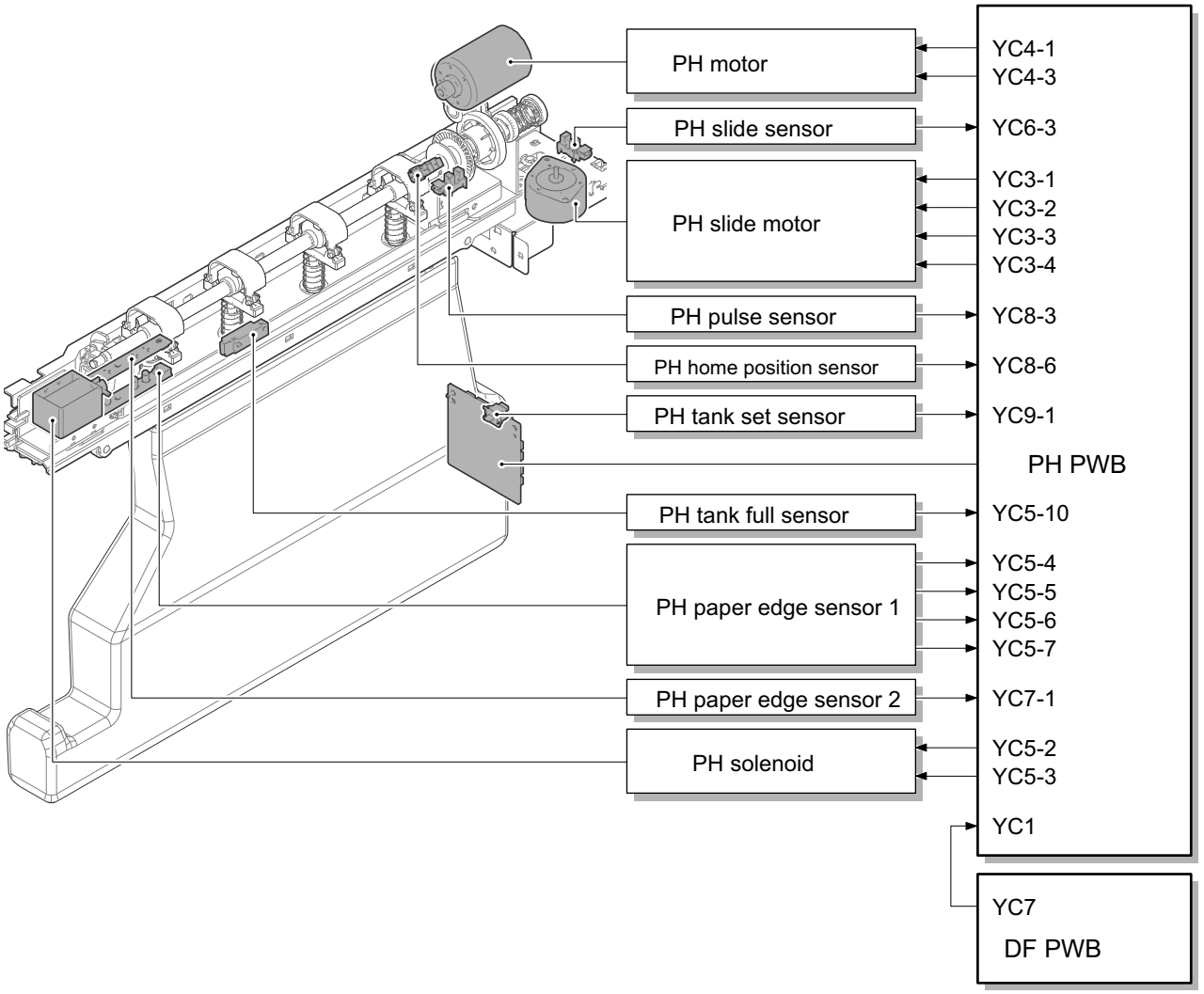

(12)Booklet folding unit (BF-730)

The folding unit makes the conveyed paper center-fold or tri-fold with the BF blade and exit paper to the fold tray. Also, the BF staple unit makes center paper center-fold and exits booklet-stapled paper to the fold tray.

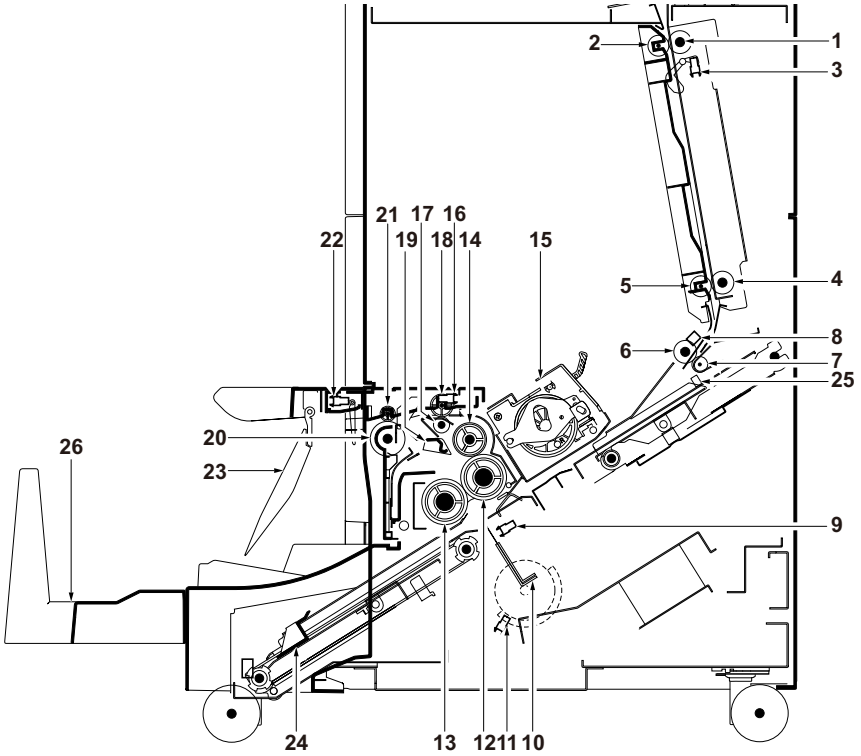

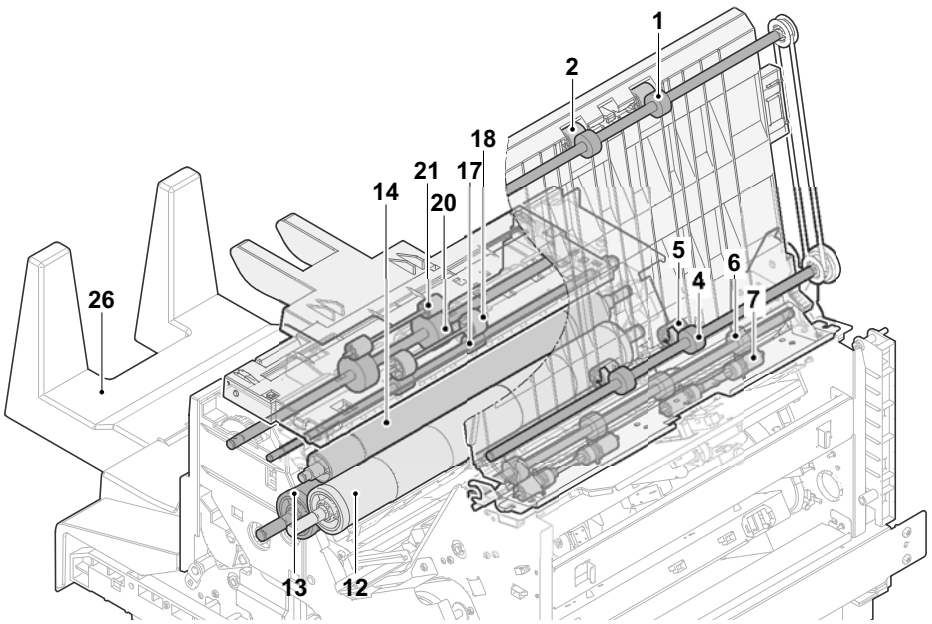

1.	BF conveying roller 1	10.	BF blade	19.	BF feedshift guide
2.	BF conveying pulley 1	11.	BF blade sensor	20.	BF exit roller
3.	BF vertical conveying sensor	12.	BF right roller	21.	BF exit pulley
4.	BF conveying roller 2	13.	BF left roller	22.	BF tray full sensor
5.	BF conveying pulley 2	14.	BF upper roller	23.	BF exit paper press arm
6.	BF entry roller	15.	BF staple unit	24.	BF lower moving plate
7.	BF entry pulley	16.	BF exit sensor	25.	BF upper moving plate
8.	BF paper entry sensor	17.	BF conveying roller 3	26.	BF tray
9.	BF paper sensor	18.	BF conveying pulley 3		

[Block diagram]

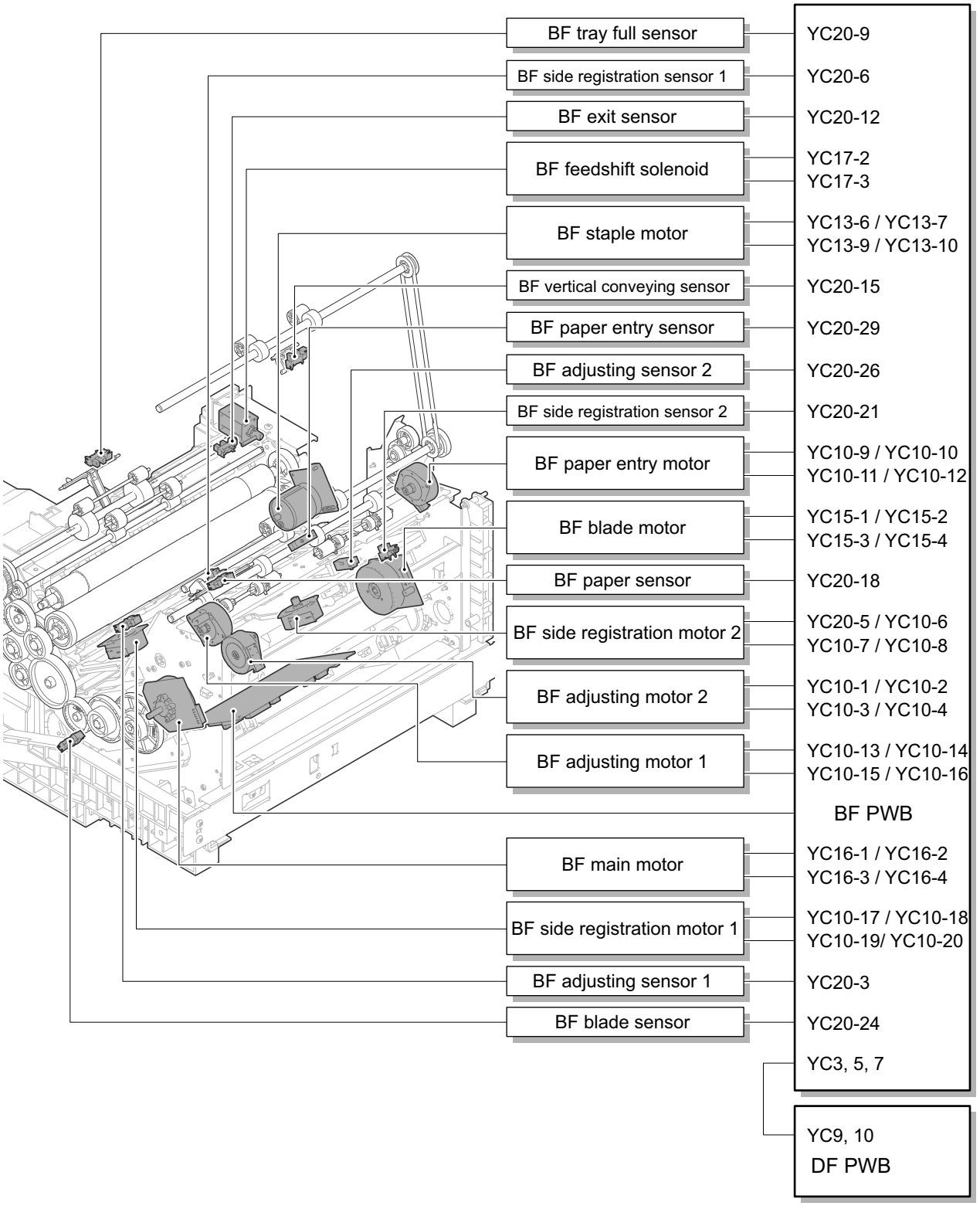

(12-1)Paper folding operation (Center-folding, Tri-folding)

Center-folding

1 Paper (b) stuck in the folding unit (a) is conveyed to the center-folding position by the BF adjusting motor 1, 2 (c) that move both upper BF moving plate (d) and lower BF moving plate (e).

2 The BF adjusting motor 1, 2 (f) drive and align t the paper side.

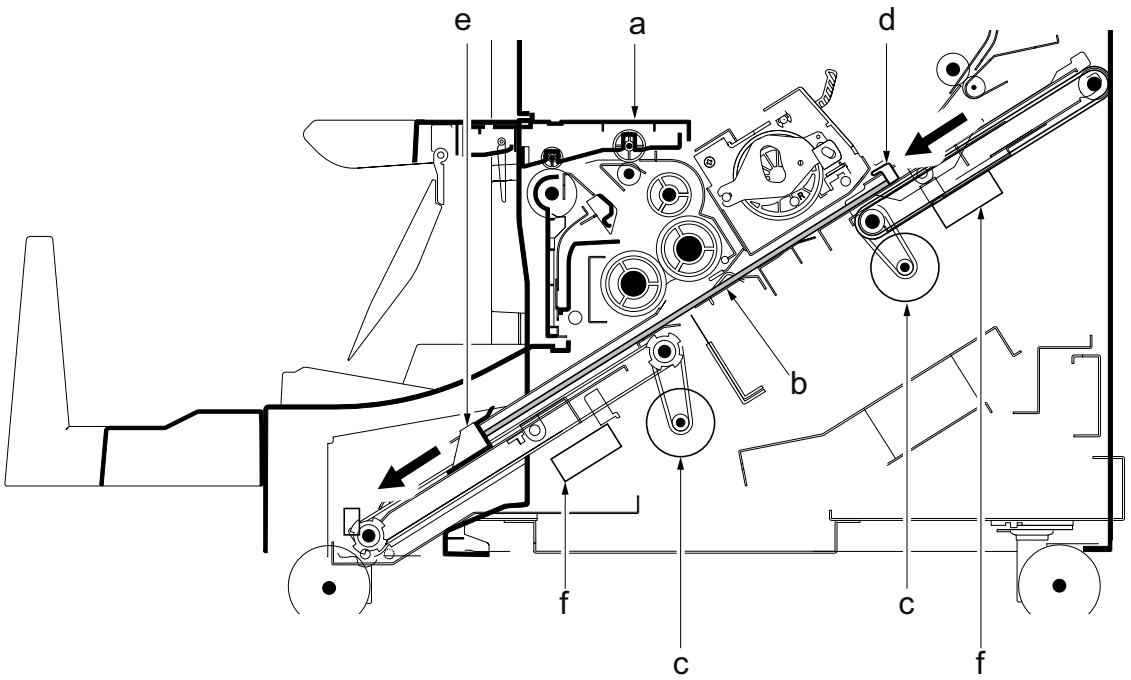

3 The BF blade (a) pushes up the center of paper by driving the BF blade motor and let it go between the BF right roller (b) and BF left motor (c).

4 Center-folded paper is exit to the BF tray (e) by the BF right roller (b), BF left roller (c) and BF exit roller (d).

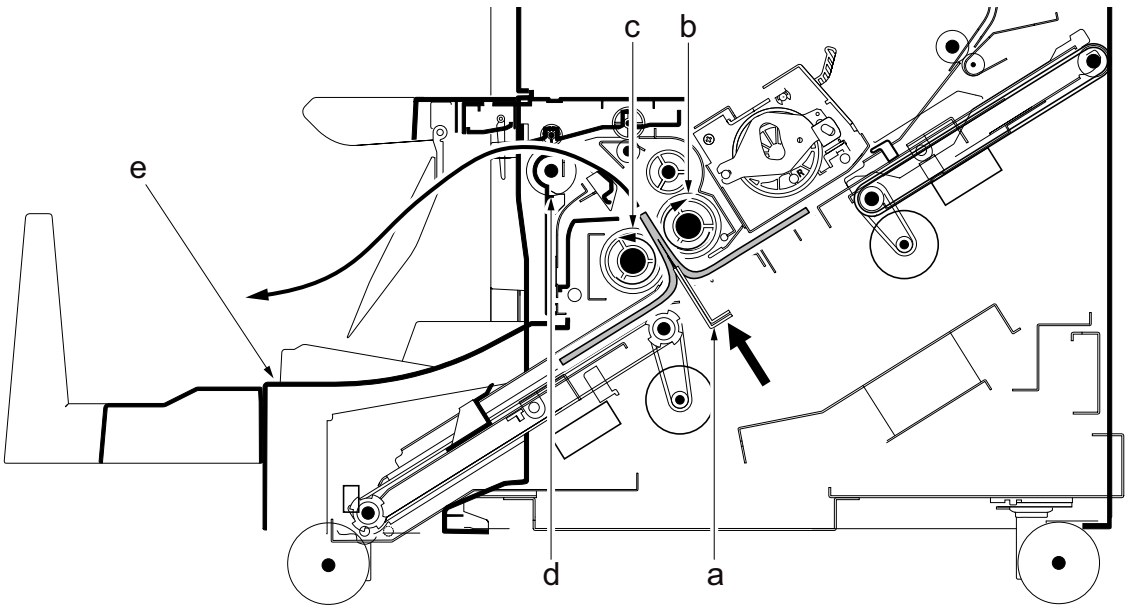

Tri-folding

1 The paper in the folding unit is conveyed to the center-folding position by drive of the BF adjusting motor 1, 2 as well as the center-folding operation.

2 After align the paper side, the BF blade (a) pushes up the paper and let it go between the BF right roller (b) and BF left roller (c).

3 The BF feed-shift solenoid (d) activates the BF feed-shift guide (e) it switches the paper conveying path for the paper from the BF right/left roller to convey it to the relief section (f).

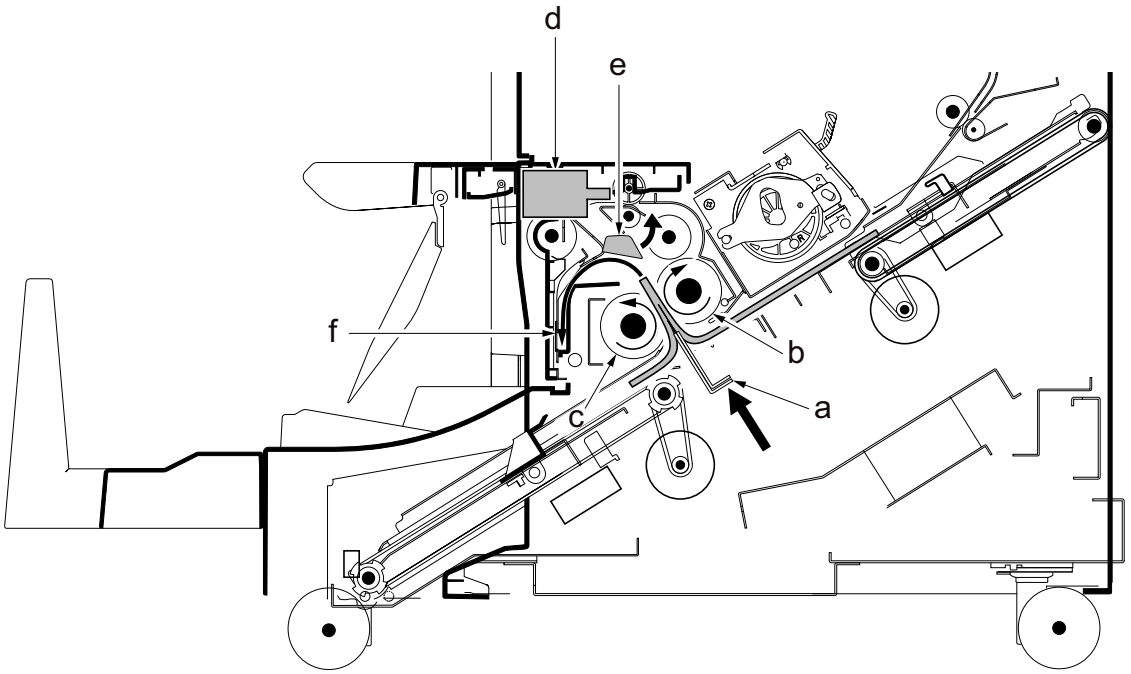

4 When the paper stops at the relief section, the paper loop generated in the space goes between the BF right roller (a) and upper BF roller (b) to get the paper fold on the inside.

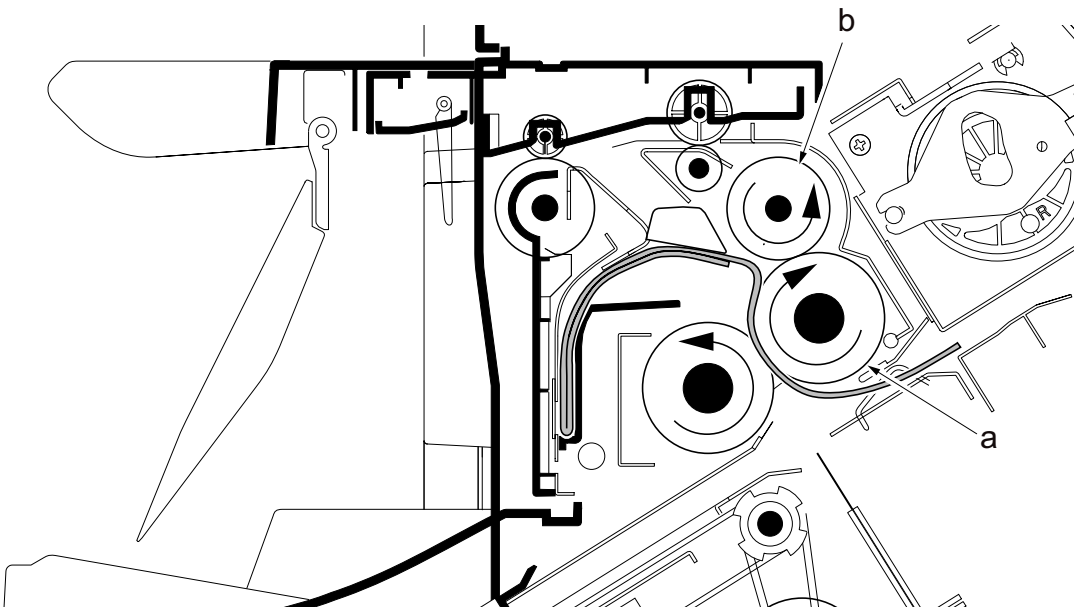

5 The BF conveying roller (b) and BF exit roller (c) convey the folded paper (a) to the BF tray (d).

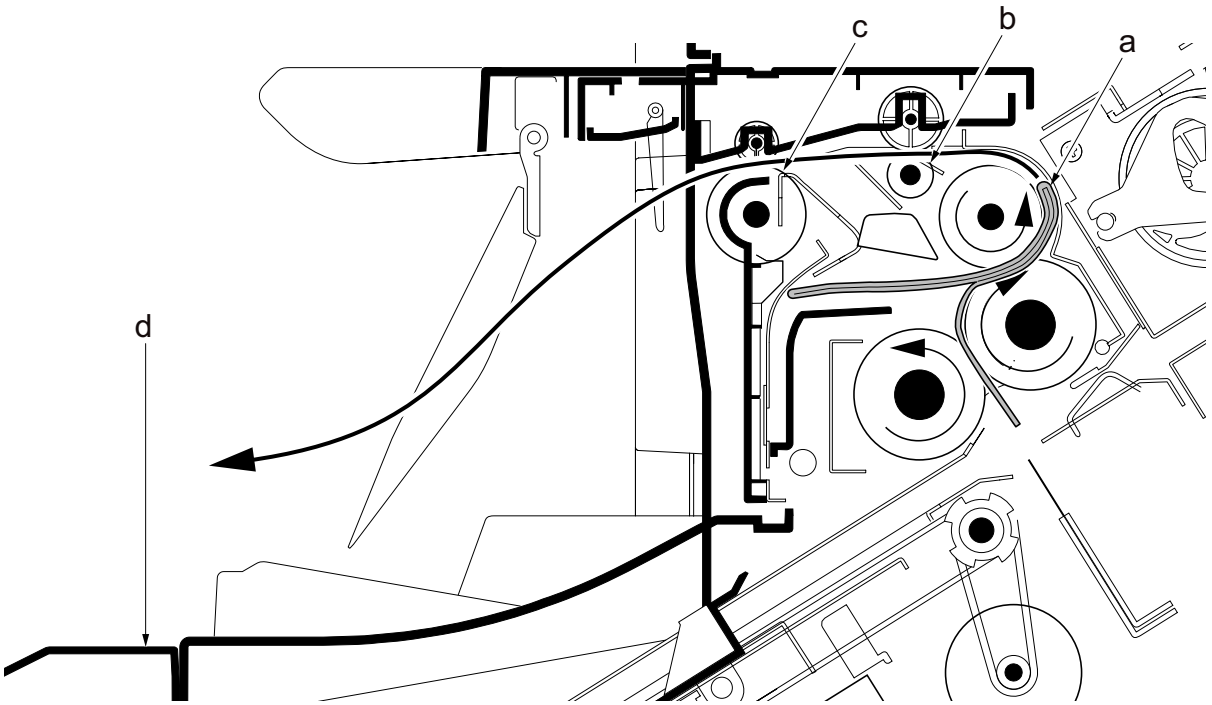

(12-2)Tri-folding position adjustment for the folding unit

Execute the treatment below to make width of A, B and C even as tri-folding.

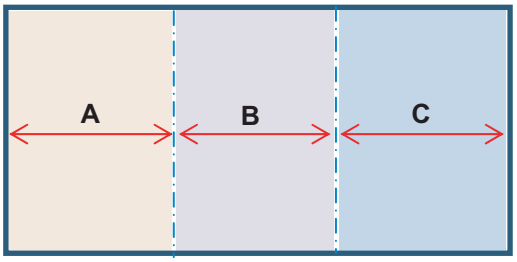

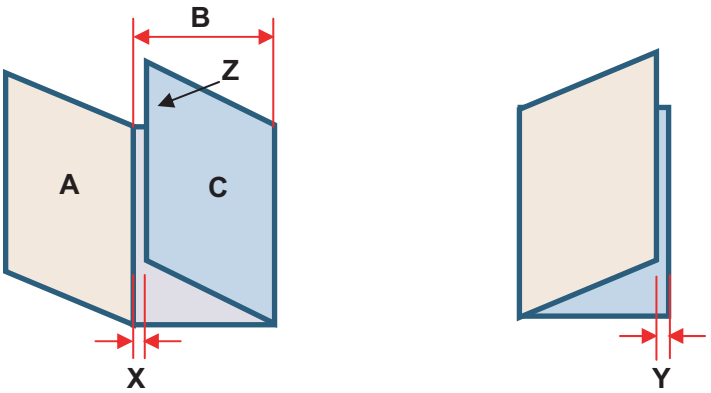

* If this adjustment is executed for bundled paper, Z section may be folded since there is little margin at the tri-folding position (X, Y).

* Machine shipment setting (B)
  Metric (A4): 100 to 102 mm
  Inch (Letter): 95 to 96 mm

Adjustment 1

Change the width of B.

Adjuster plate relocation method

1 Push the folding unit release lever (a) and pull out the folding unit (b).

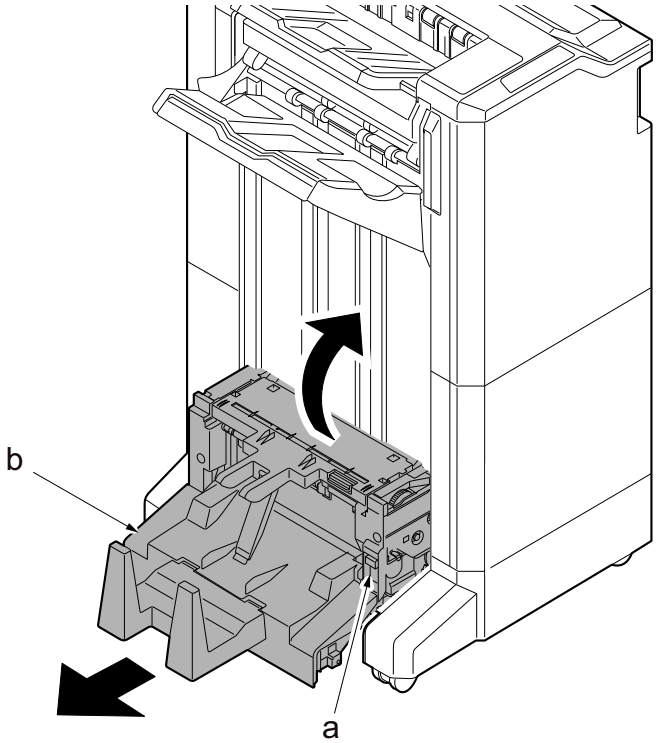

2 Open the upper folding unit cover (a) upward and remove two screws (b) to take the exit cover (c) away.

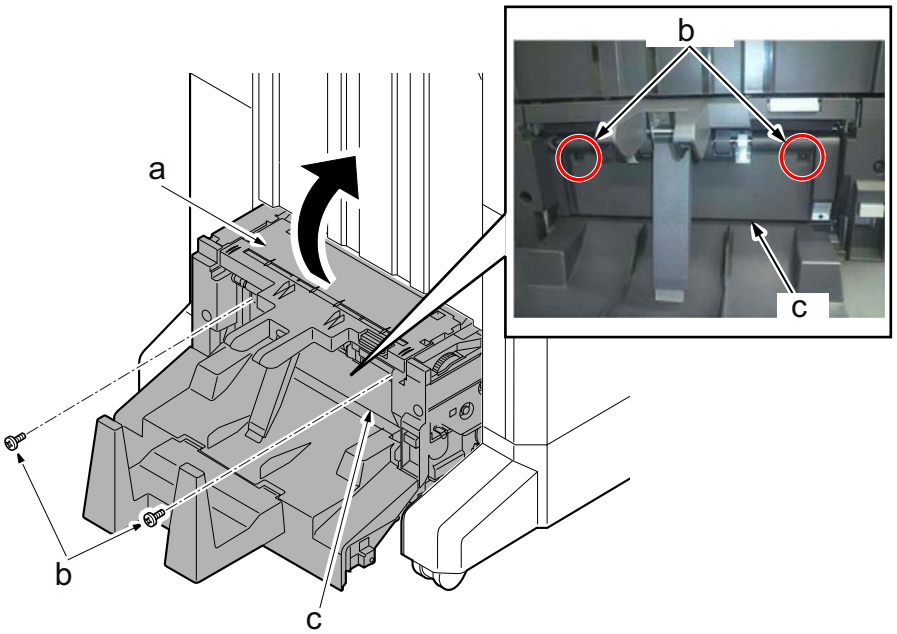

3 Loosen two screws (b) securing the adjuster plate (a) and move it.

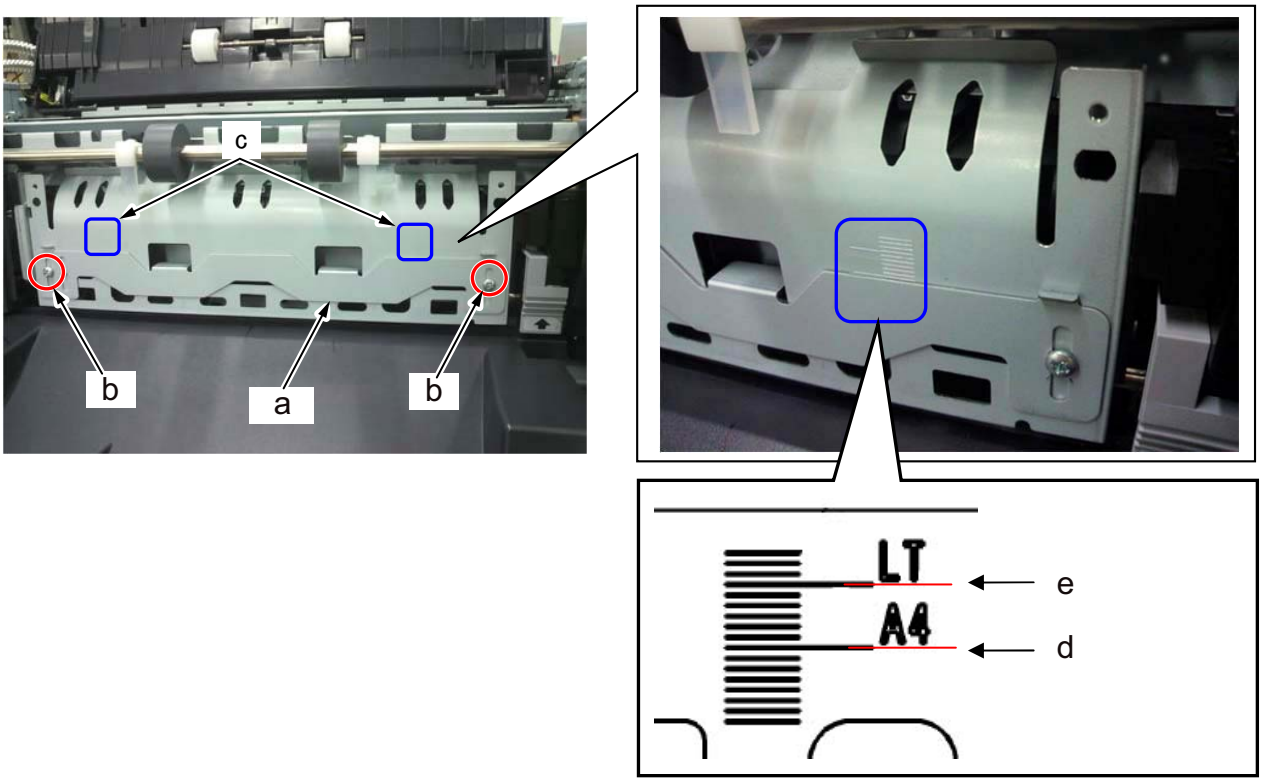

- Raising the adjuster plate makes the width B decrease and lowering the adjuster makes increase the width. (Scale: 1mm)
- When adjusting, fix it where the left and right scale are equal in reference to the scale (c).

Shipment setting position

Metric: A4 (d)

Inch: LT (e)

* “A4” and “LT” punch marks are on the machine rear side only.

Treatment 2

Change the setting values in U246 [Setting: Three Fold] to shift the tri-folding position (a) and to change the width A and C. (Width of B no change.)

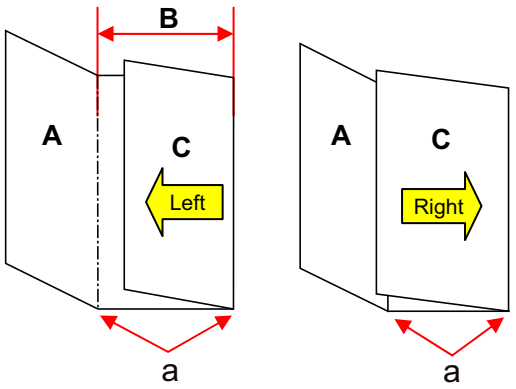

Raise the set value to align the tri-folding to the left.

Lower the set value to align the tri-folding to the right.

(13)100 sheet staple finisher (DF-7150)

(13-1)Paper entry and feed-shift and DF tray B exit section

The paper entry section convey paper from the main unit to the feedshift section. Also, the feedshift guide 3 switches the paper conveying path to convey paper to the DF tray B or finishing section.

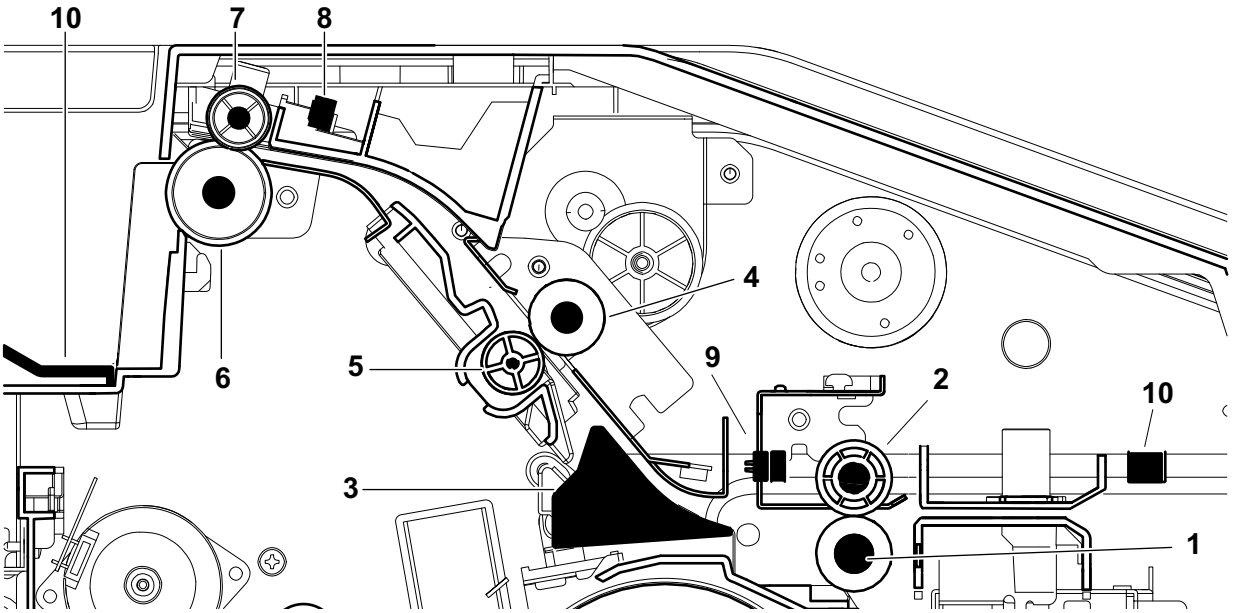

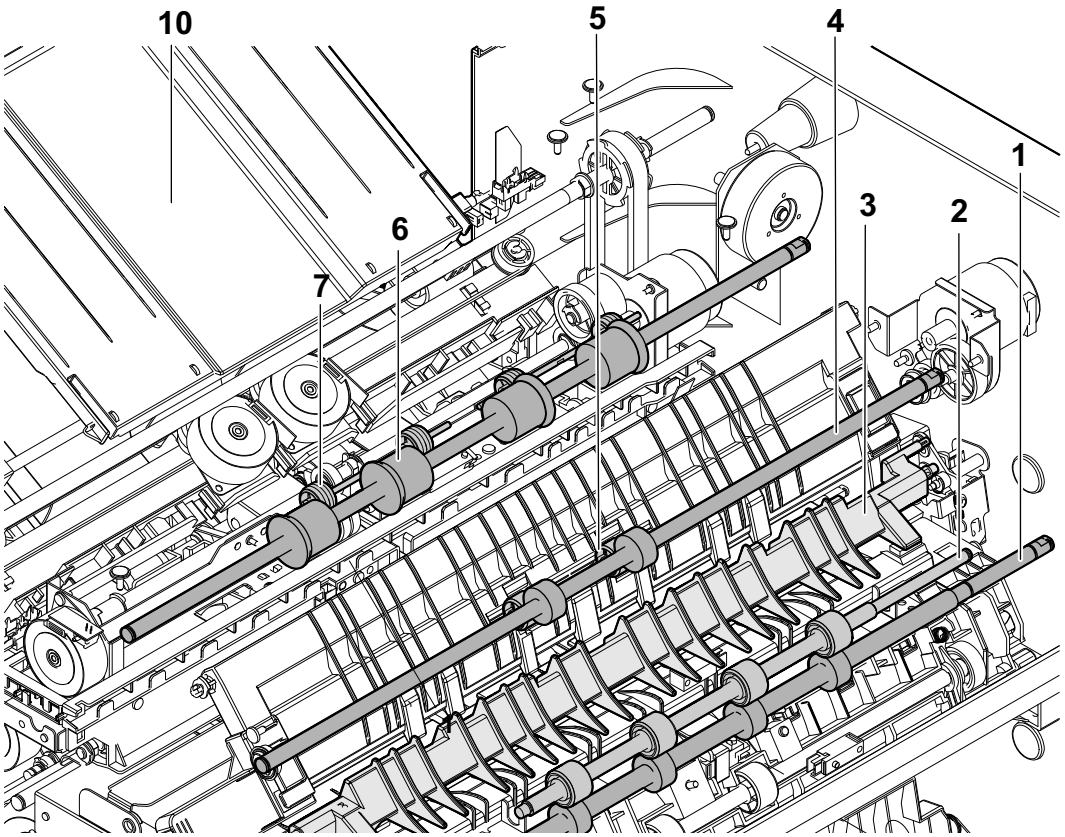

1 DF entry roller
2 DF entry pulley
3 DF feedshift solenoid 3
4 DF tray B conveying roller
5 DF conveying pulley
6 DF tray B exit roller
7 DF exit pulley
8 DF sub exit sensor
9 DF entry sensor
10 DF tray B

(13-2)Feedshift operation to the DF tray B or finishing section

The feedshift guide 3 (b) is activated by the DF feedshift solenoid 3 (a) and switches the paper conveying path, then convey it to either the DF tray B (c), relief drum (d) or finishing section (e). Also, the DF sub exit sensor (f) detects paper jam at exit to the DF tray B (c).

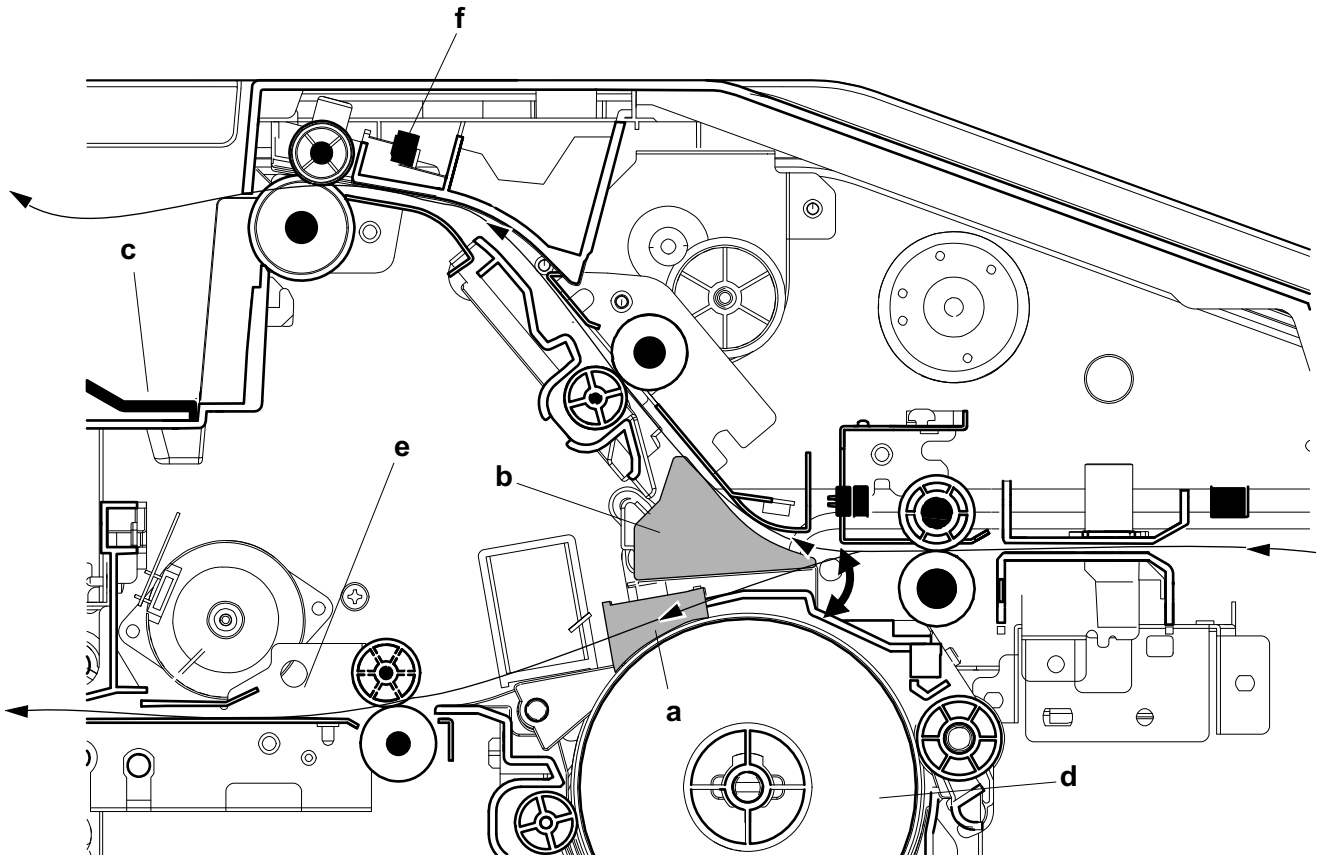

(13-3)Finishing section

The finishing section consists of the parts below and convey the paper from the main unit to the DF tray A. Also, bundle exit mode and staple mode are processed.

Also, for folding, switch the paper path to the relief drum by the feedshift guide 1.

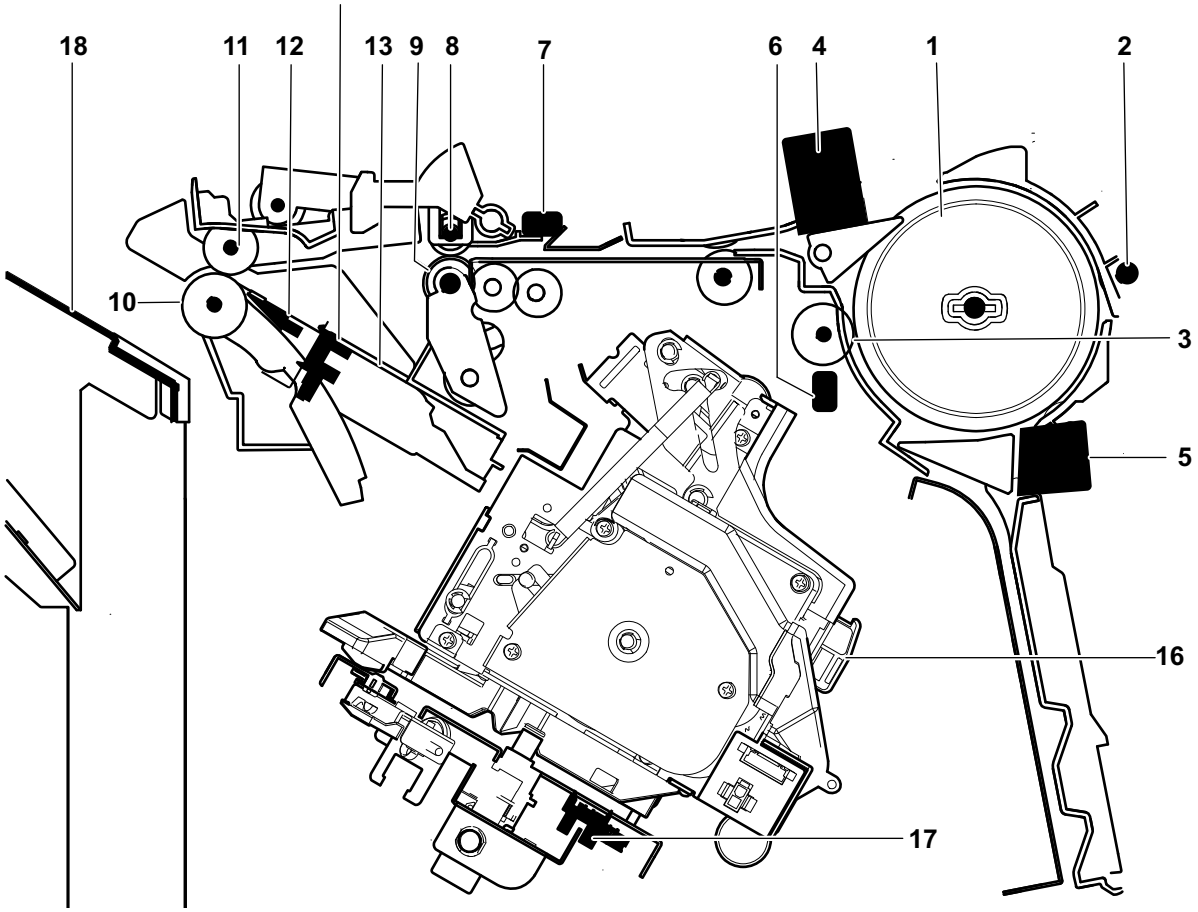

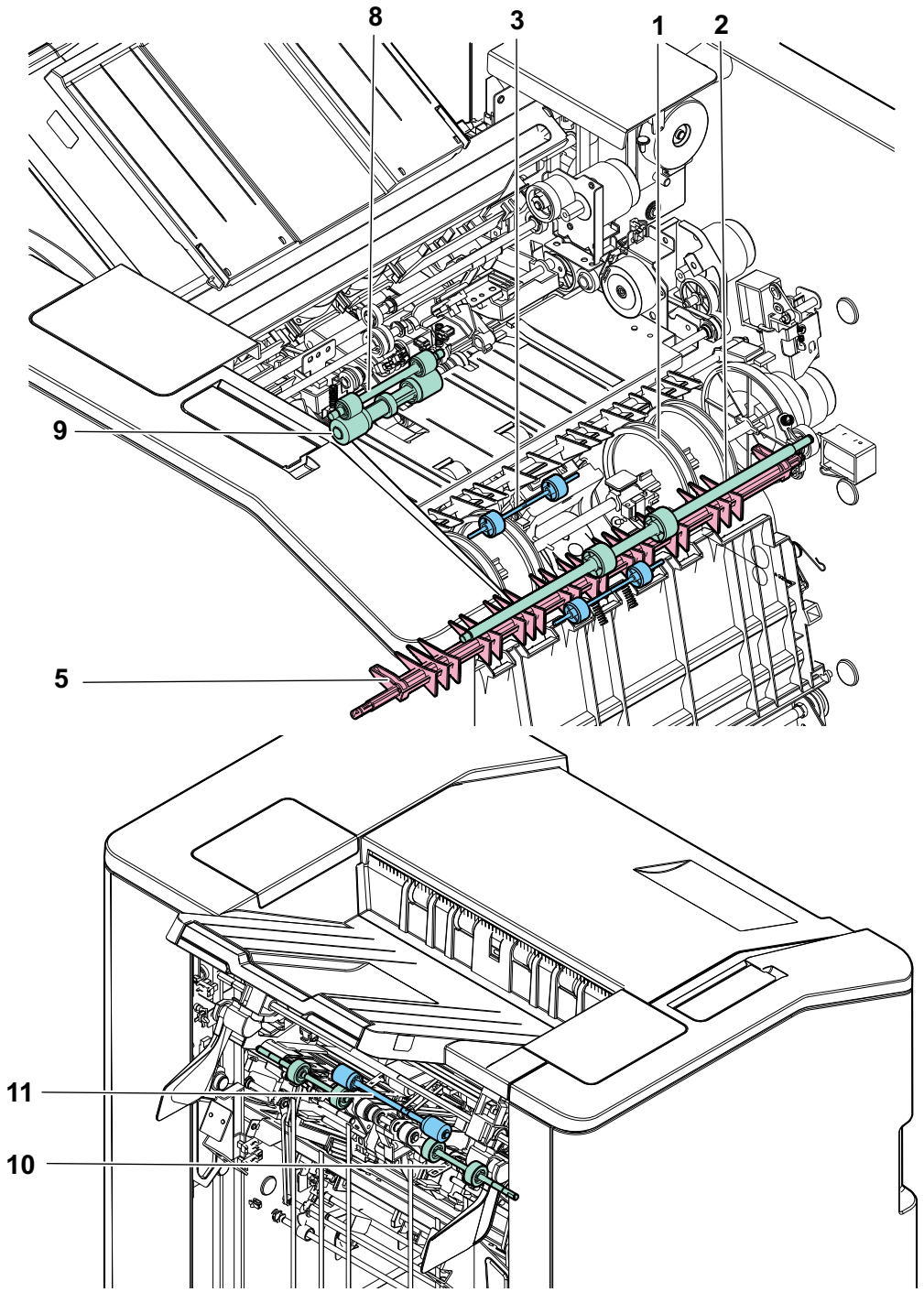

1 DF relief drum	7 DF middle sensor	13 DF bundle exit unit
2 DF conveying pulley	8 DF middle roller	14 DF side registration sensor 1
3 DF conveying pulley	9 DF middle pulley	15 DF side registration sensor 2
4 DF Feedshift solenoid 1	10 DF tray A exit roller	16 DF staple unit
5 DF Feedshift solenoid 2	11 DF exit pulley	17 DF slide sensor
6 DF drum sensor	12 DF exit sensor	18 DF tray A

[Block diagram]

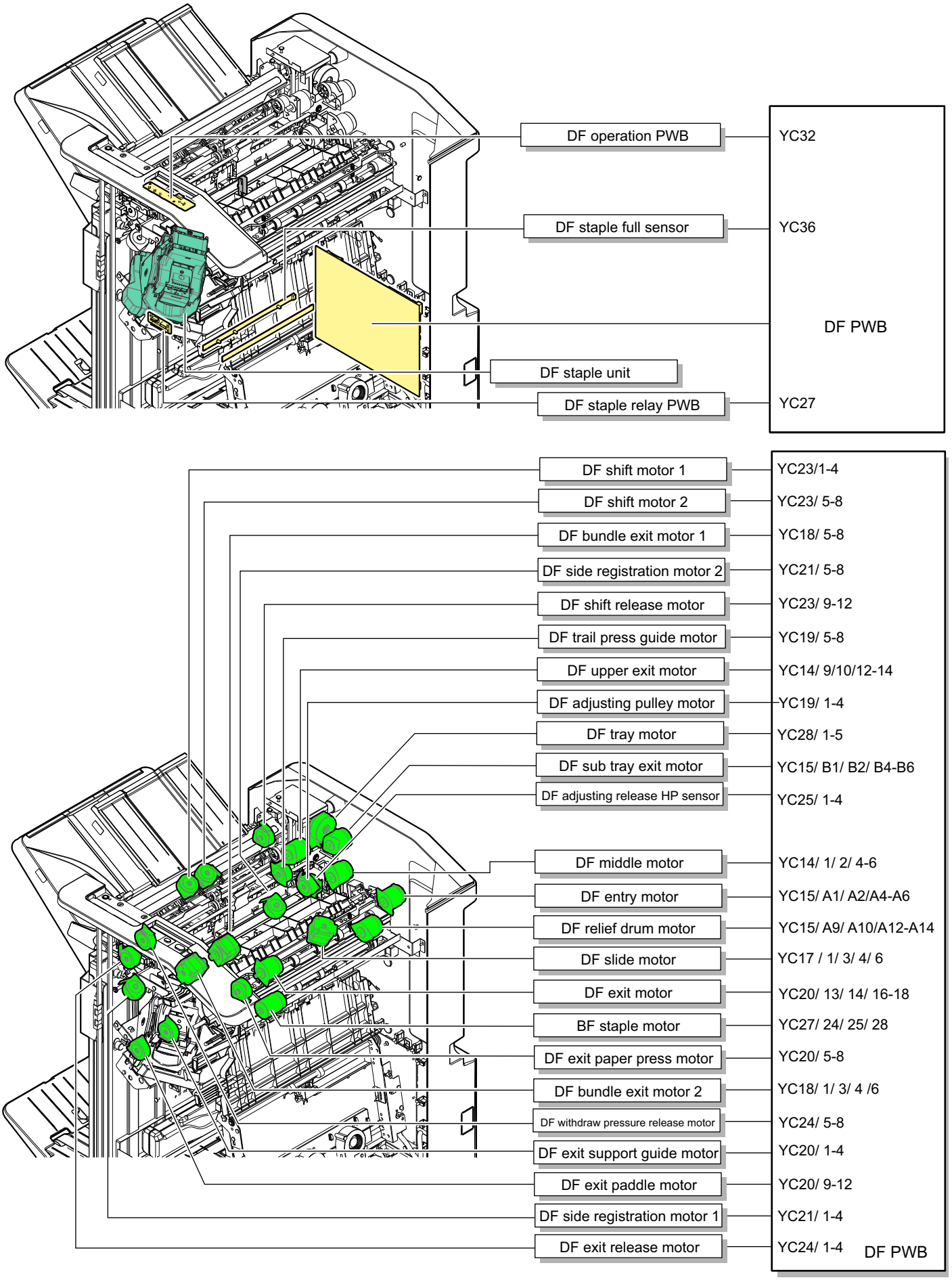

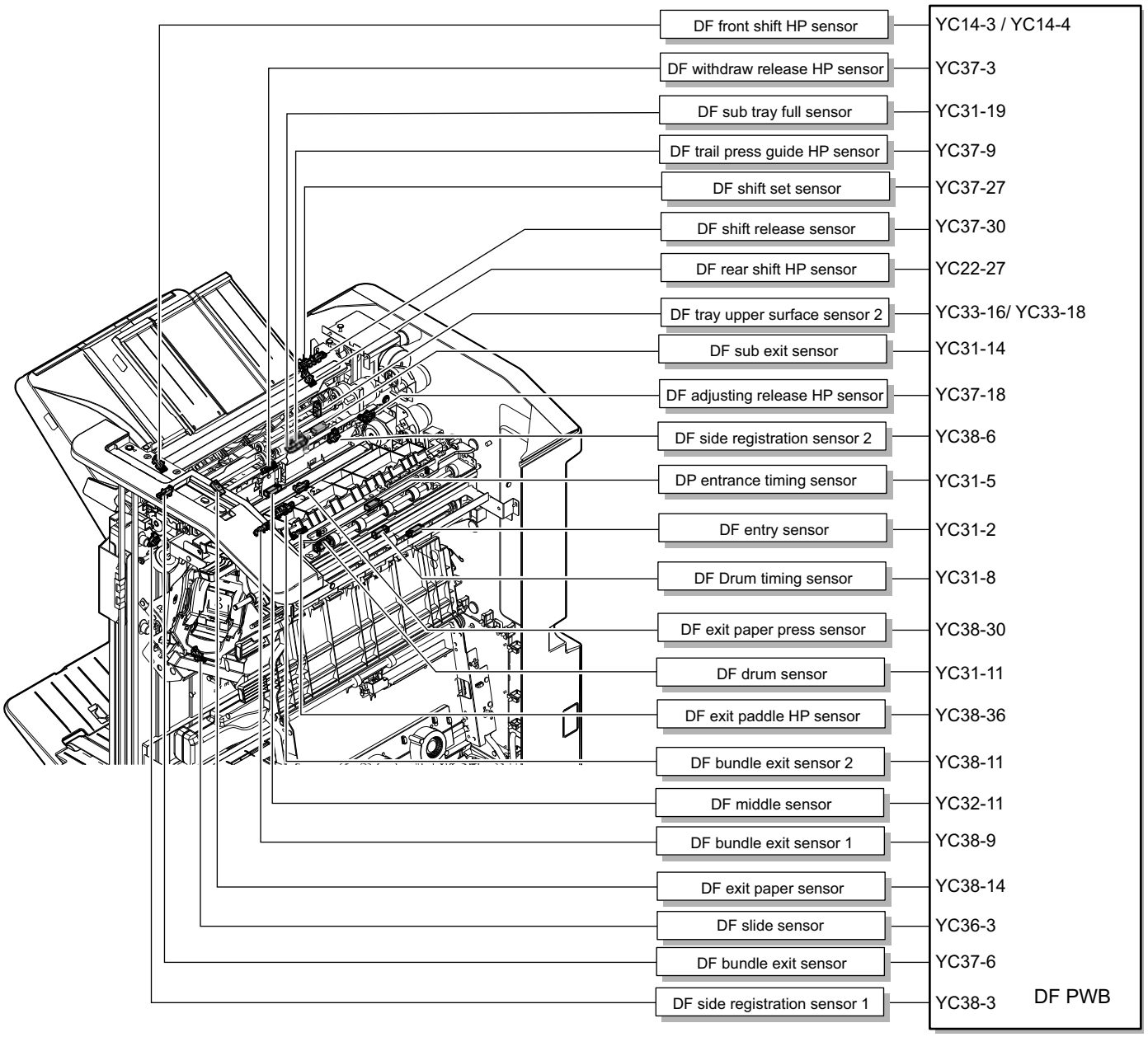
DF front shift HP sensor
YC14-3 / YC14-4
DF withdraw release HP sensor
YC37-3
DF sub tray full sensor
YC31-19
DF trail press guide HP sensor
YC37-9
DF shift set sensor
YC37-27
DF shift release sensor
YC37-30
DF rear shift HP sensor
YC22-27
DF tray upper surface sensor 2
YC33-16/ YC33-18
DF sub exit sensor
YC31-14
DF adjusting release HP sensor
YC37-18
DF side registration sensor 2
YC38-6
DP entrance timing sensor
YC31-5
DF entry sensor
YC31-2
DF Drum timing sensor
YC31-8
DF exit paper press sensor
YC38-30
DF drum sensor
YC31-11
DF exit paddle HP sensor
YC38-36
DF bundle exit sensor 2
YC38-11
DF middle sensor
YC32-11
DF bundle exit sensor 1
YC38-9
DF exit paper sensor
YC38-14
DF slide sensor
YC36-3
DF bundle exit sensor
YC37-6
DF side registration sensor 1
YC38-3
DF PWB

(13-4)Relief drum operation

As process multiple copies of A4 size paper to the finishing section or folding section, to secure the time to finish paper, the 1st and 2nd paper of the next group is relieved until the 3rd paper is conveyed.

1 The feed-shift guide 1 (b) is activated by the DF feed-shift solenoid 1 (a) and switch the paper path, then the first paper of the next group goes to the relief drum (c).

2 Likewise, 2nd paper of the next group goes to the relief drum (c).

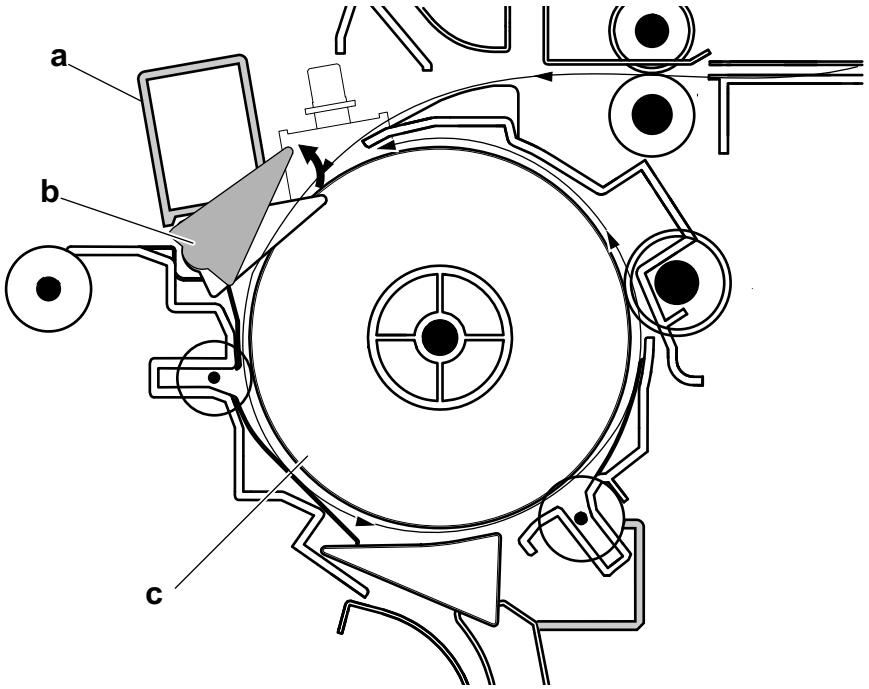

3 When the 3rd paper of the next group goes to the relief drum, it goes to the finishing section (a) with the 1st and 2nd paper. Then, switch the paper path by the feed-shift guide 1 (b).

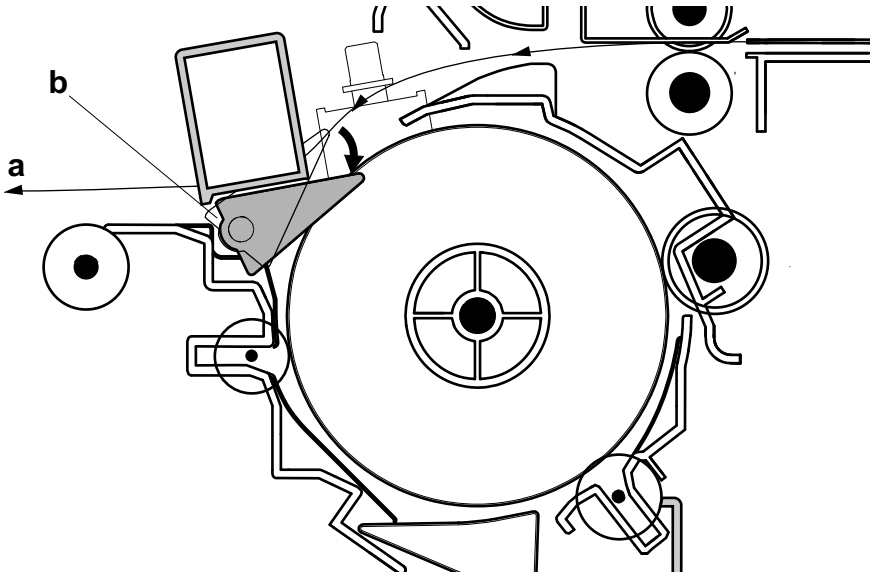

4 The DF feedshift solenoid 2 (b) activates the feedshift guide 2 (c) and switches the paper path to the folding unit (a).

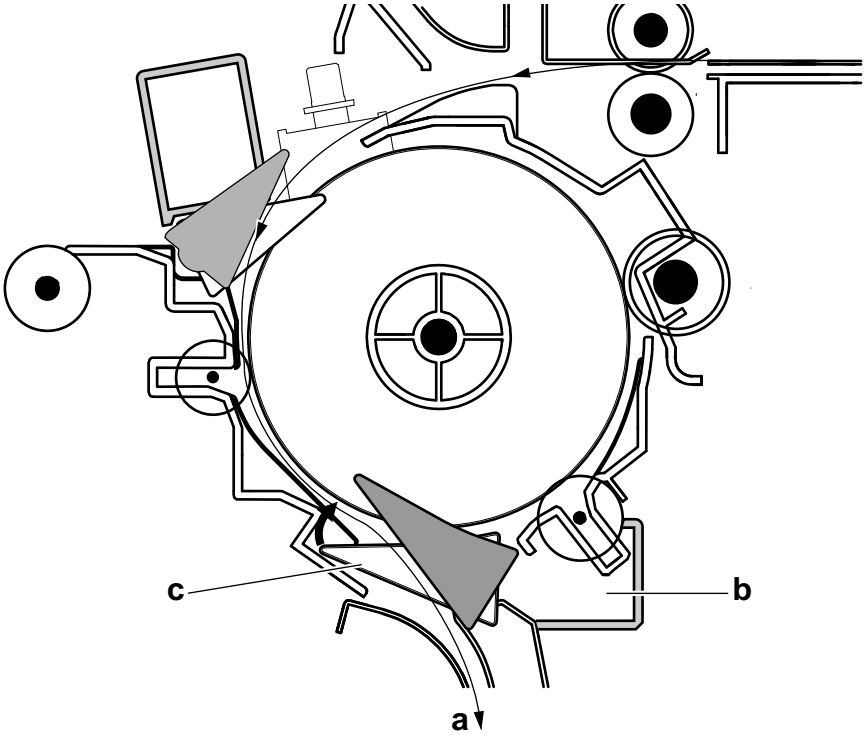

(13-5)DF exit tray

The paper is exit to main tray in sort or staple function. And exit to main tray when it is selected as output tray.

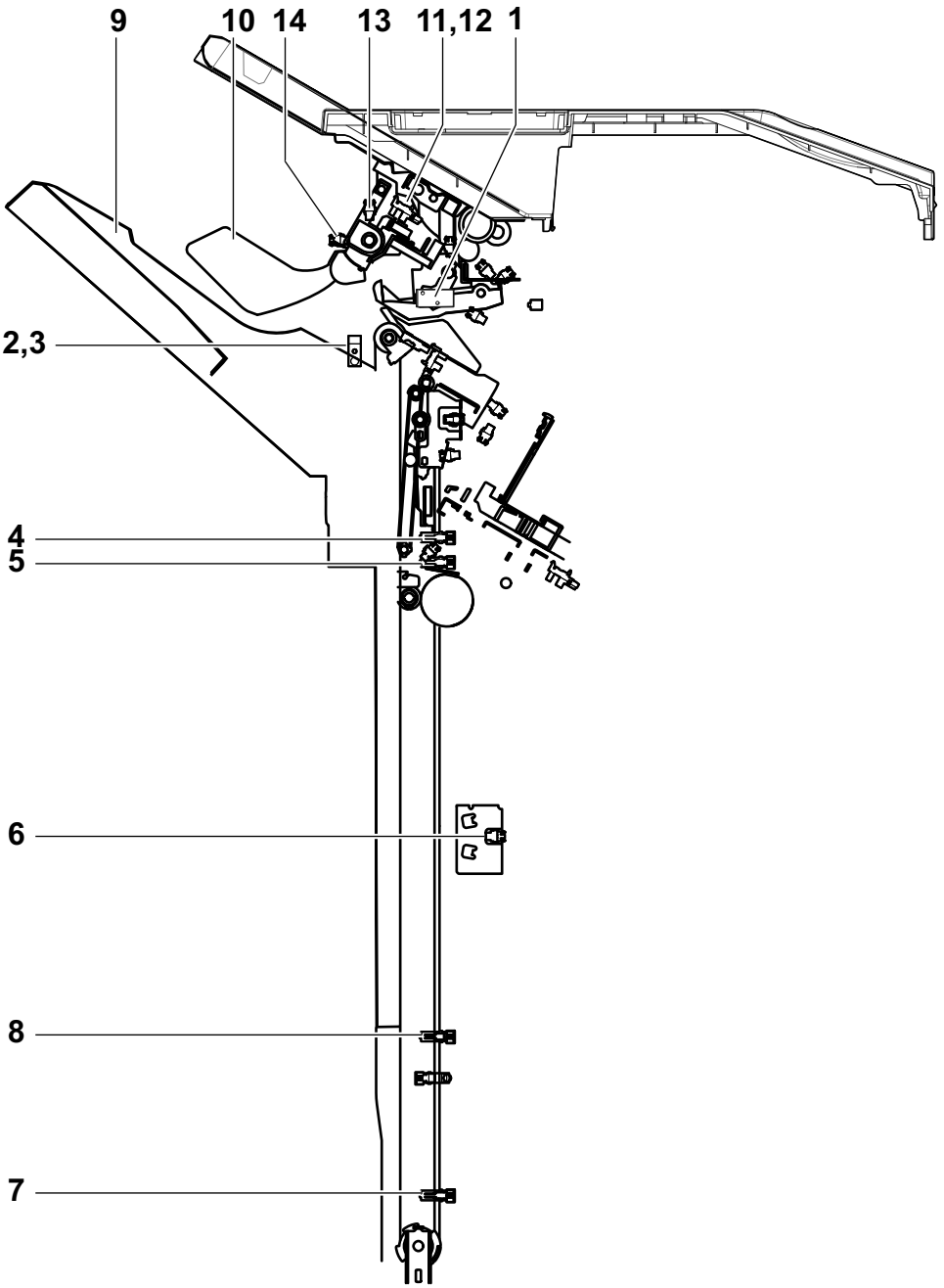

1	DF exit switch solenoid	8	DF tray sensor 5
2	DF tray upper surface sensor 1	9	DF main tray (tray A)
3	DF tray upper surface sensor 2	10	Side shift guide
4	DF tray sensor 1	11	DF rear shift HP sensor
5	DF tray sensor 2	12	DF front shift HP sensor
6	DF tray sensor 3	13	DF shift set sensor
7	DF tray sensor 4	14	DF shift release sensor

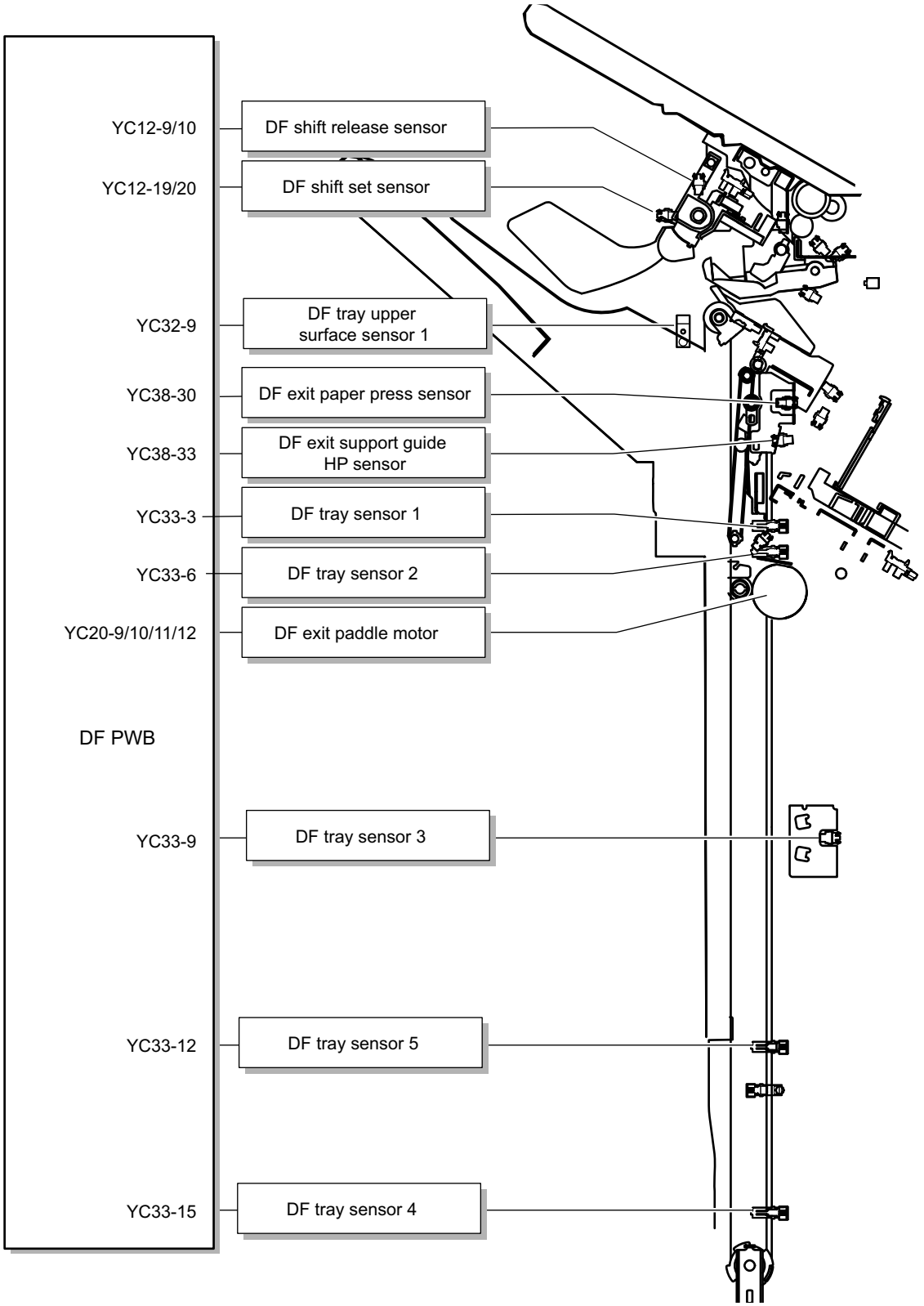
YC12-9/10
DF shift release sensor
YC12-19/20
DF shift set sensor
YC32-9
DF tray upper surface sensor 1
YC38-30
DF exit paper press sensor
YC38-33
DF exit support guide HP sensor
YC33-3
DF tray sensor 1
YC33-6
DF tray sensor 2
YC20-9/10/11/12
DF exit paddle motor
DF PWB
YC33-9
DF tray sensor 3
YC33-12
DF tray sensor 5
YC33-15
DF tray sensor 4

(14)Booklet Unit (BF-9100)

The folding unit makes the conveyed paper bi-fold or tri-fold with the BF blade and exit paper to the fold tray. Also, the BF staple unit makes center paper center-fold and exits booklet-stapled paper to the fold tray.

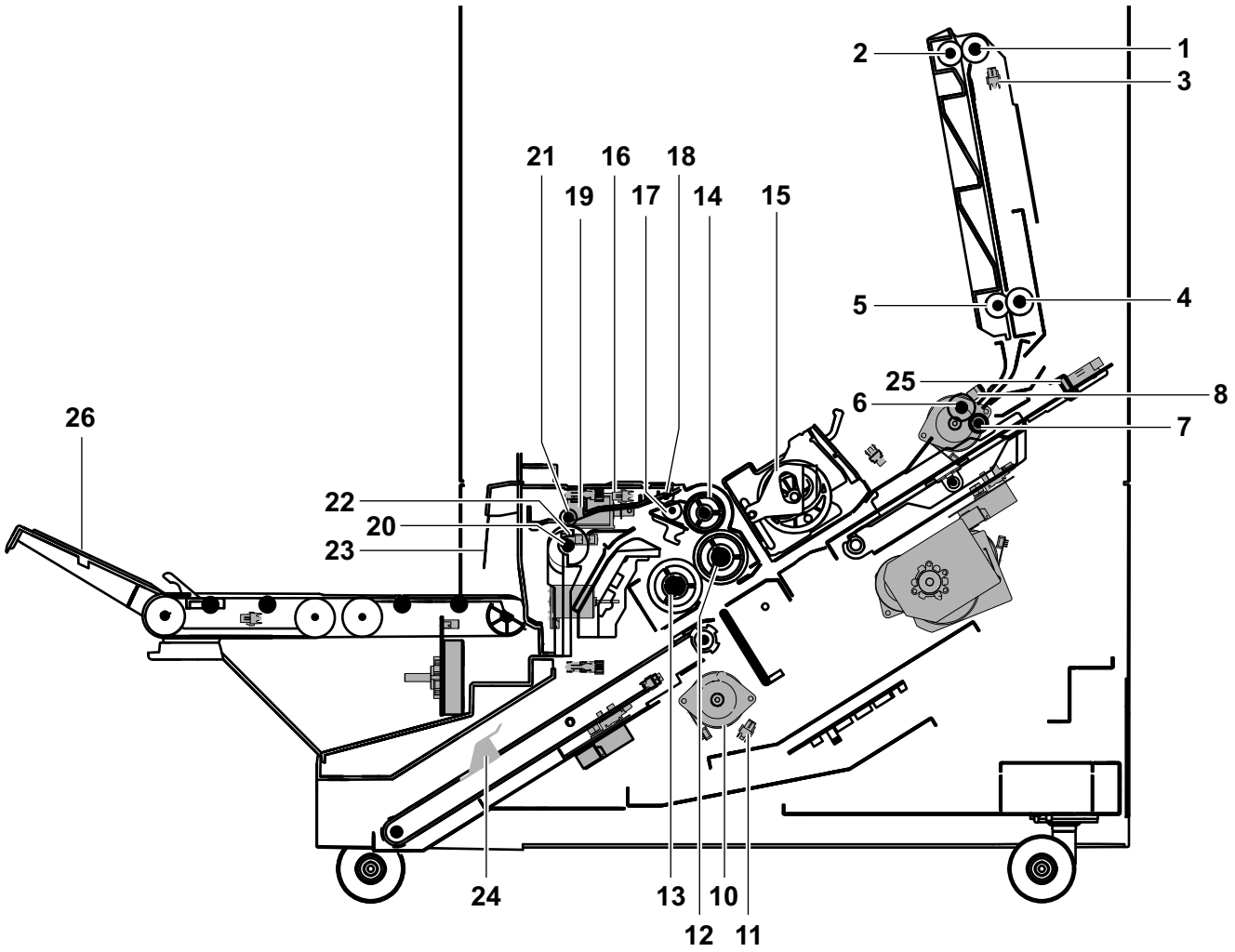

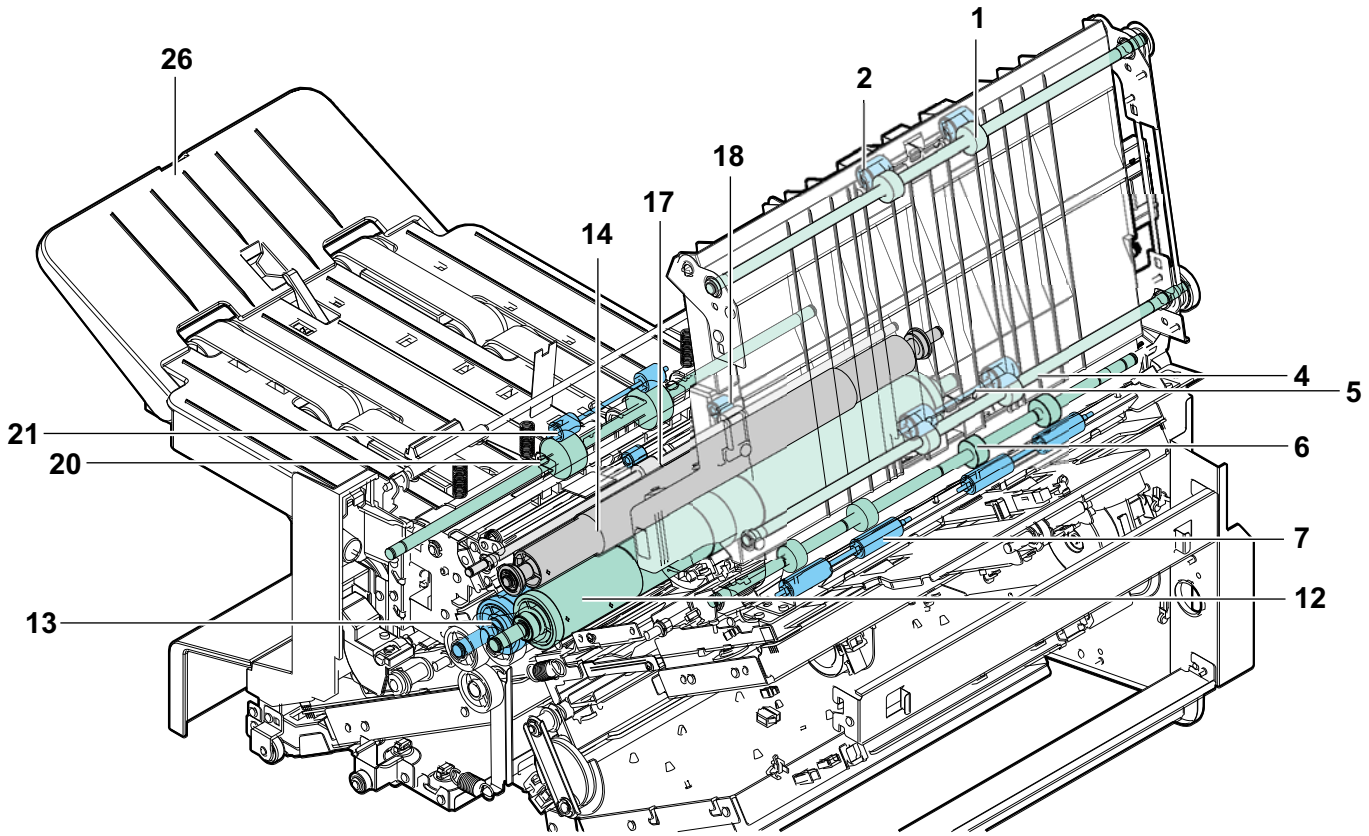

1 BF conveying roller 1	10 BF blade	19 BF feedshift guide
2 BF conveying pulley 1	11 BF blade sensor	20 BF exit roller
3 BF vertical conveying sensor	12 BF right roller	21 BF exit pulley
4 BF conveying roller 2	13 BF left roller	22 BF tray full sensor
5 BF conveying pulley 2	14 BF upper roller	23 BF exit paper press arm
6 BF entry roller	15 BF staple unit	24 BF lower moving plate
7 BF entry pulley	16 BF exit sensor	25 BF upper moving plate
8 BF paper entry sensor	17 BF conveying roller 3	26 BF tray
9 BF paper sensor	18 BF conveying pulley 3	

[Block diagram]

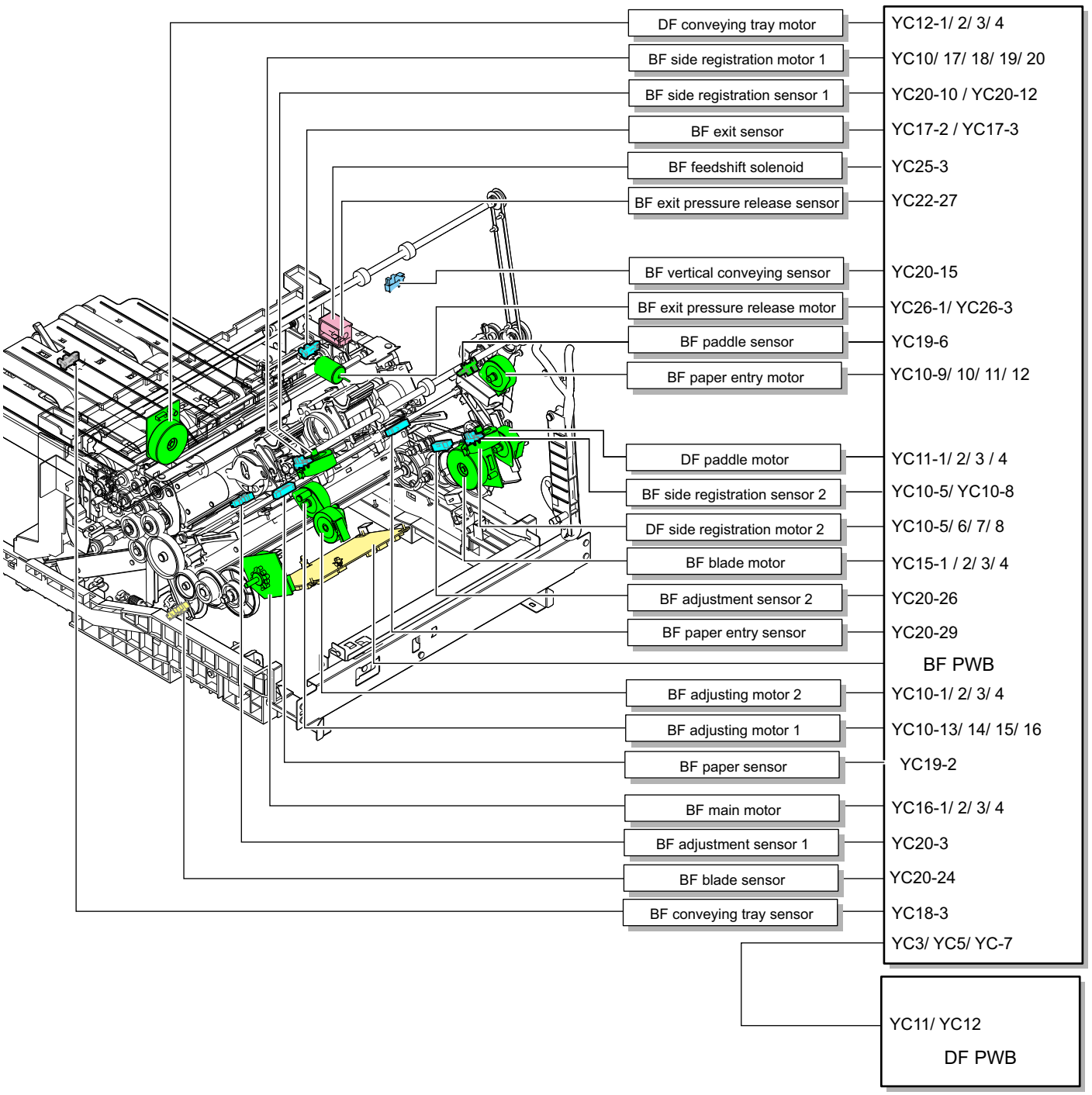

(15)Inserter(IS-7100)

The Inserter merges paper conveyed from the main unit and paper fed from the IS paper feed tray, and convey to the DF conveying section at the downstream by overlapping those 2 papers.

(15-1)IS paper feeding section

IS paper feed section consists of the IS upper tray section and the IS lower tray section. Paper set in the IS paper feed tray is conveying to the IS conveying section. Paper is fed by rotating the IS pickup roller and the IS paper feed roller.

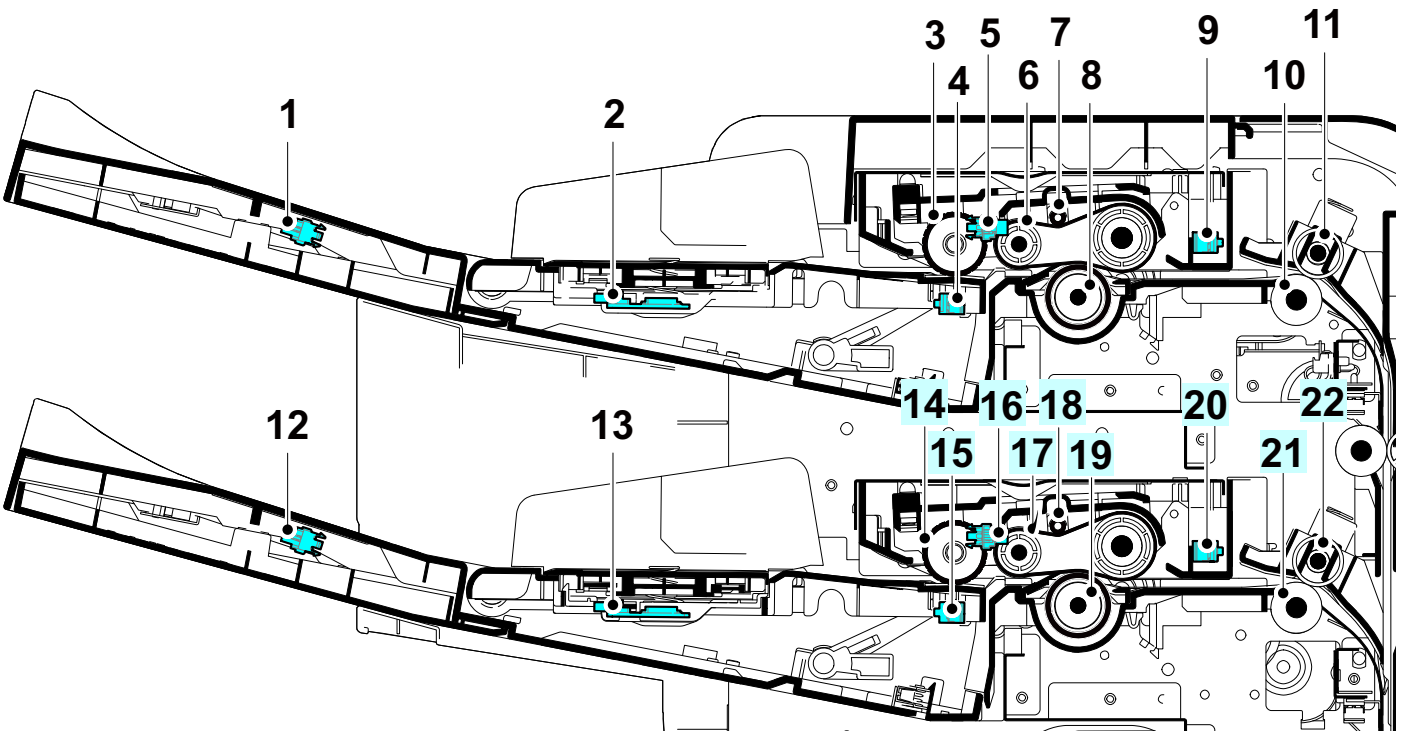

1	IS upper tray paper length sensor	12	IS lower tray paper length sensor
2	IS upper tray paper width sensor	13	IS lower tray paper width sensor
3	IS upper tray pickup roller	14	IS lower tray pickup roller
4	IS upper tray paper sensor	15	IS lower tray paper sensor
5	IS upper tray pickup sensor	16	IS lower tray pickup sensor
6	IS upper tray paper feed belt	17	IS lower tray paper feed belt
7	IS upper tray paper feed belt tension pulley	18	IS lower tray paper feed belt tension pulley
8	IS upper tray retard roller	19	IS lower tray retard roller
9	IS upper tray paper feed sensor	20	IS lower tray paper feed sensor
10	IS upper tray registration roller	21	IS lower tray registration roller
11	IS upper tray registration pulley	22	IS lower tray registration pulley

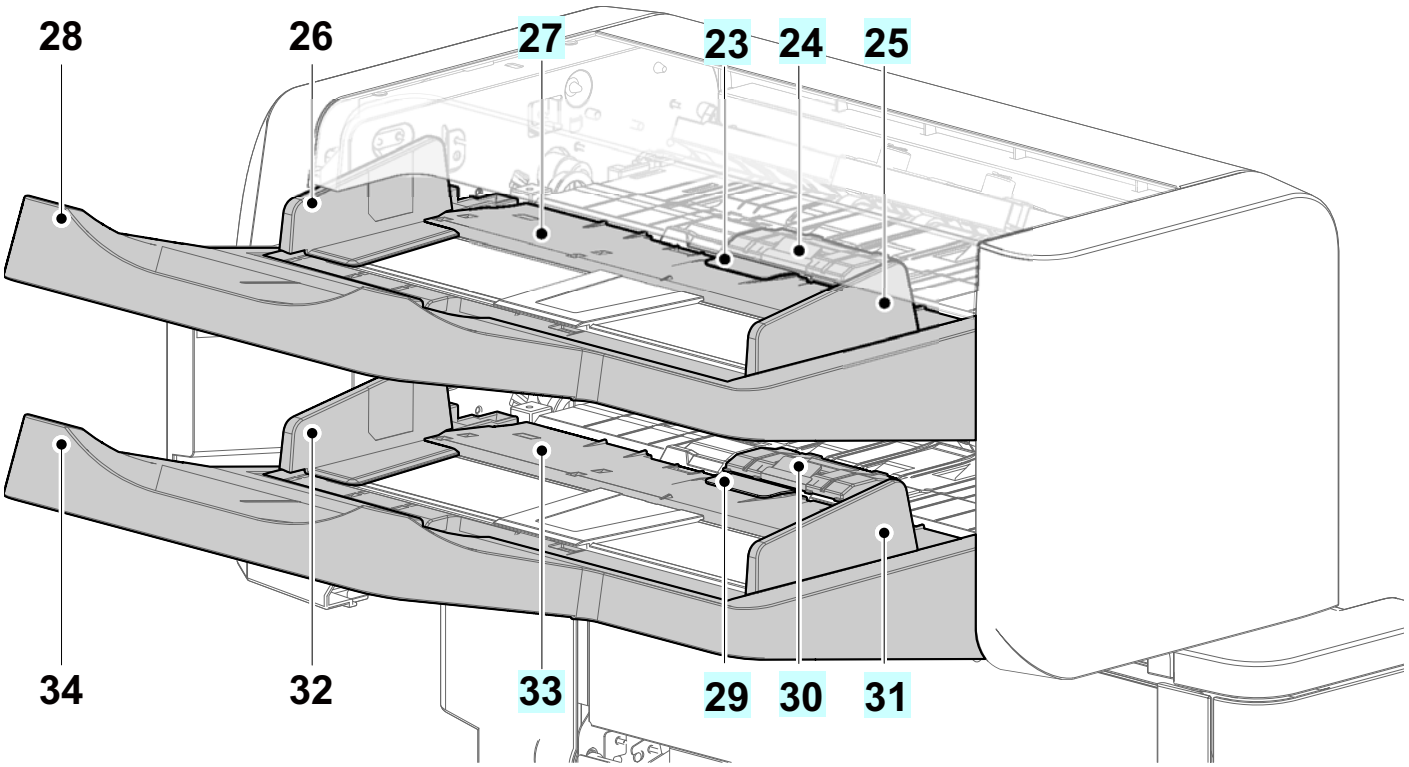

23 IS upper tray friction pad
24 IS upper tray separation pad assy
25 IS upper tray front width guide
26 IS upper tray rear width guide
27 IS upper tray lift plate
28 IS upper paper feed tray
29 IS lower tray friction pad
30 IS lower tray separation pad assy
31 IS lower tray front width guide
32 IS lower tray rear width guide
33 IS lower tray lift plate
34 IS lower paper feed tray

(15-2)IS conveying section and IS confluence section

IS conveying section sends paper from the paper feed section to the merging section. Paper conveyed from the main unit and conveyed from the IS conveying section merges at the IS merging section and output to the DF entrance section.

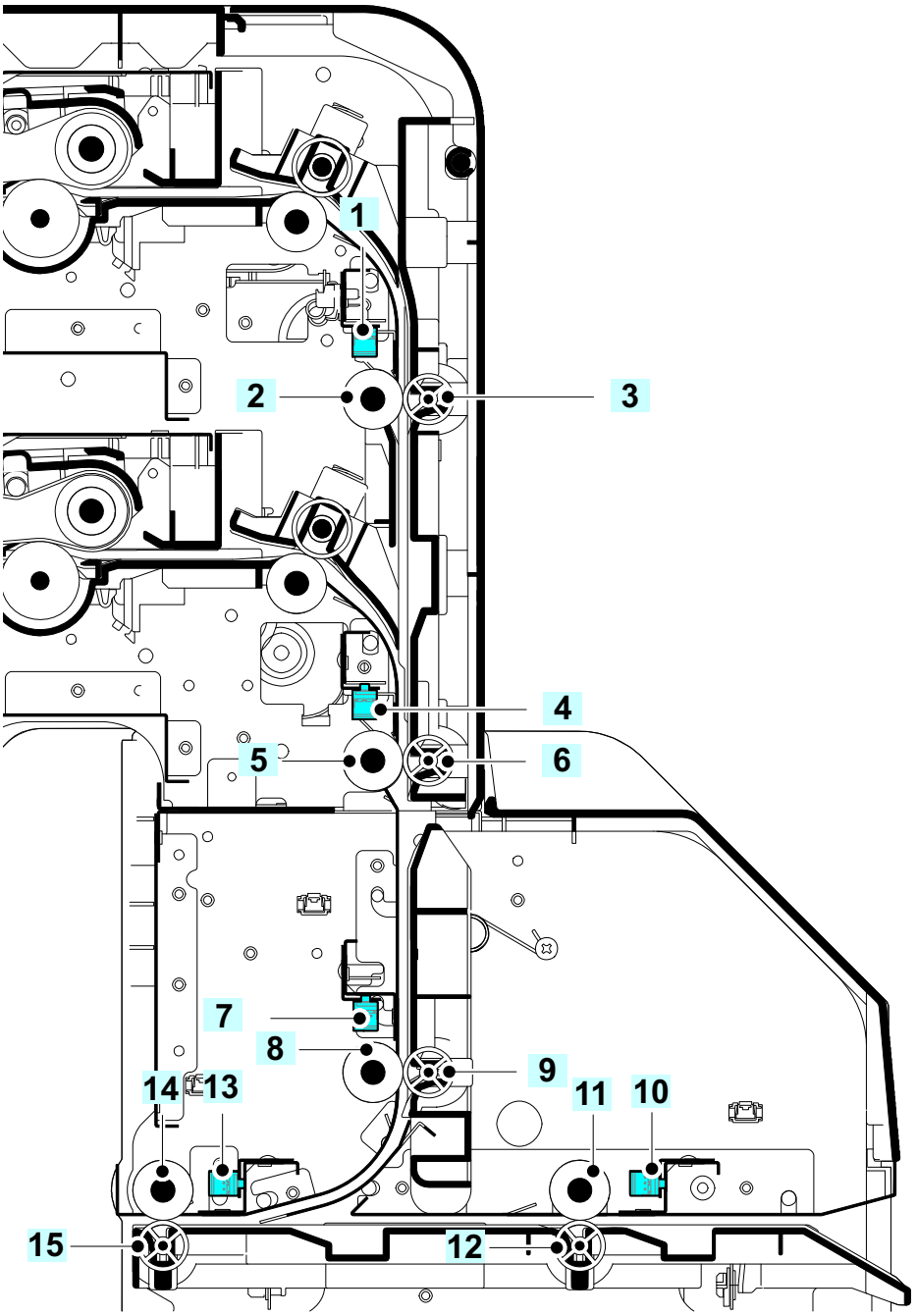

1 IS upper tray registration sensor
2 IS upper tray conveying roller
3 IS upper tray conveying pulley
4 IS lower tray registration sensor
5 IS lower tray conveying roller
6 IS lower tray conveying pulley
7 IS confluence conveying sensor
8 IS confluence conveying roller
9 IS confluence conveying pulley
10 IS entry sensor
11 IS entry roller
12 IS entry pullet
13 IS exit sensor
14 IS exit roller
15 IS exit pulley

[Block diagram]

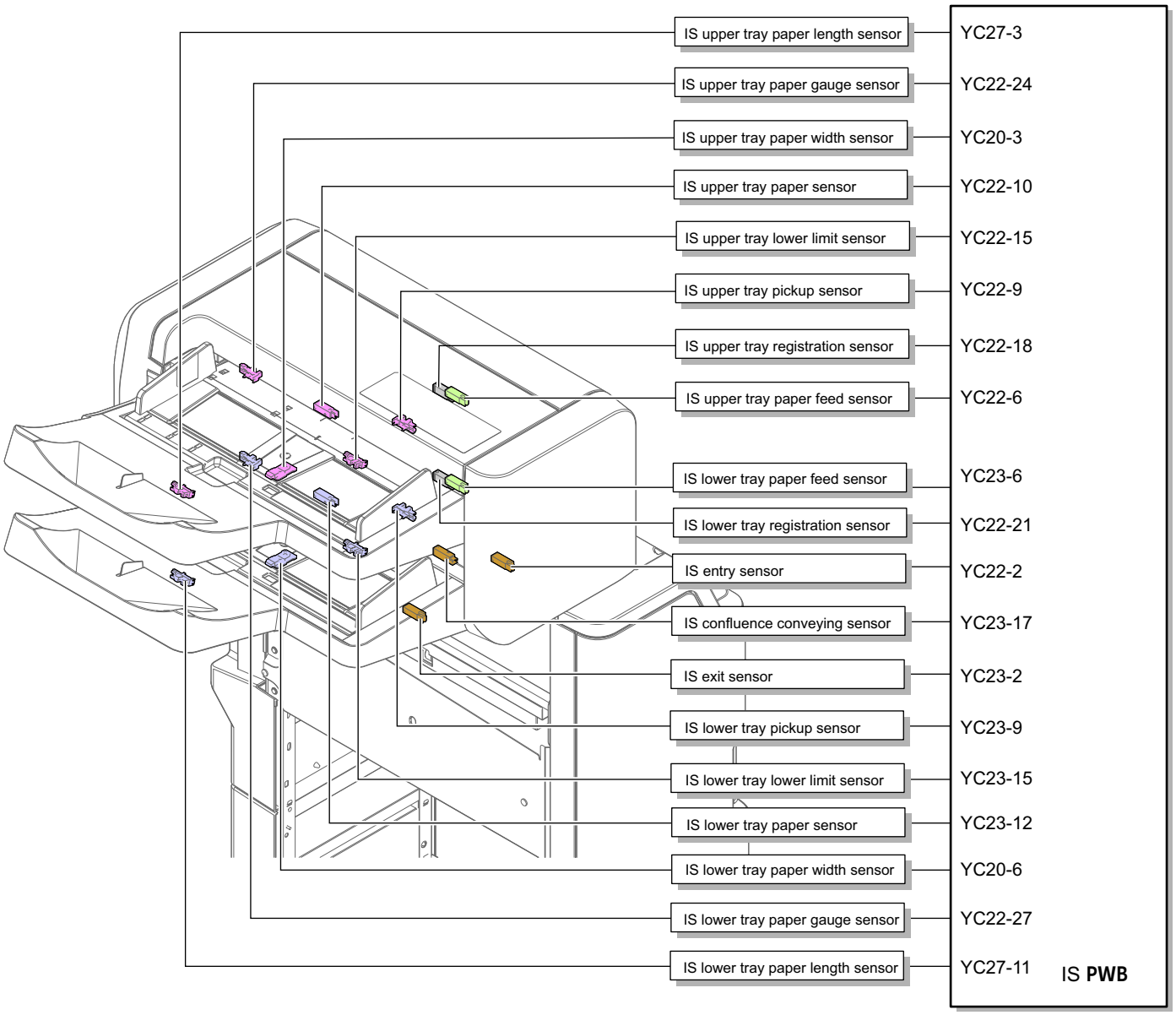

[Block diagram]

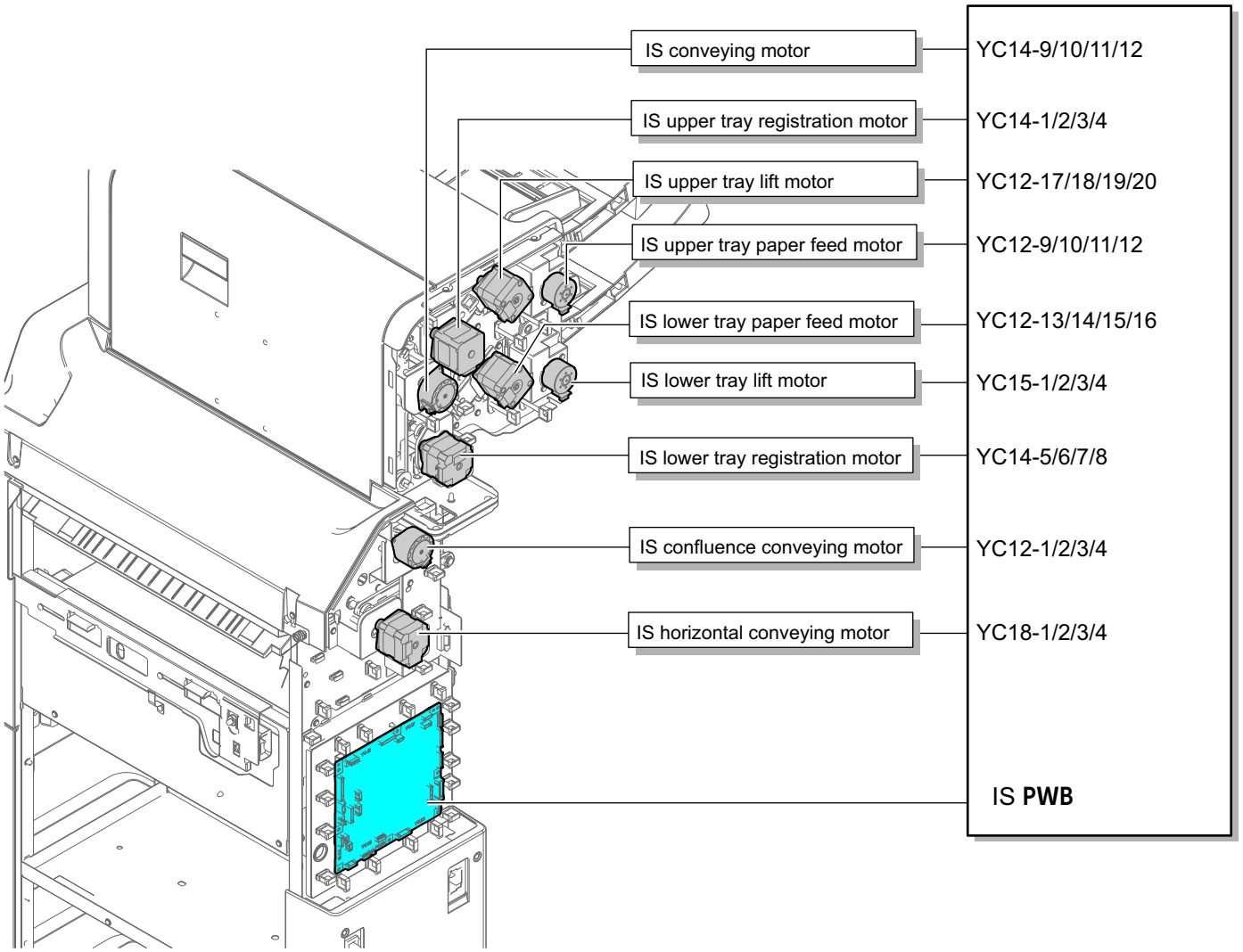

(16)Z-folding unit (ZF-7100)

Z-folding unit exit papers to DF after folded with double or triple.

(16-1)Roller layout

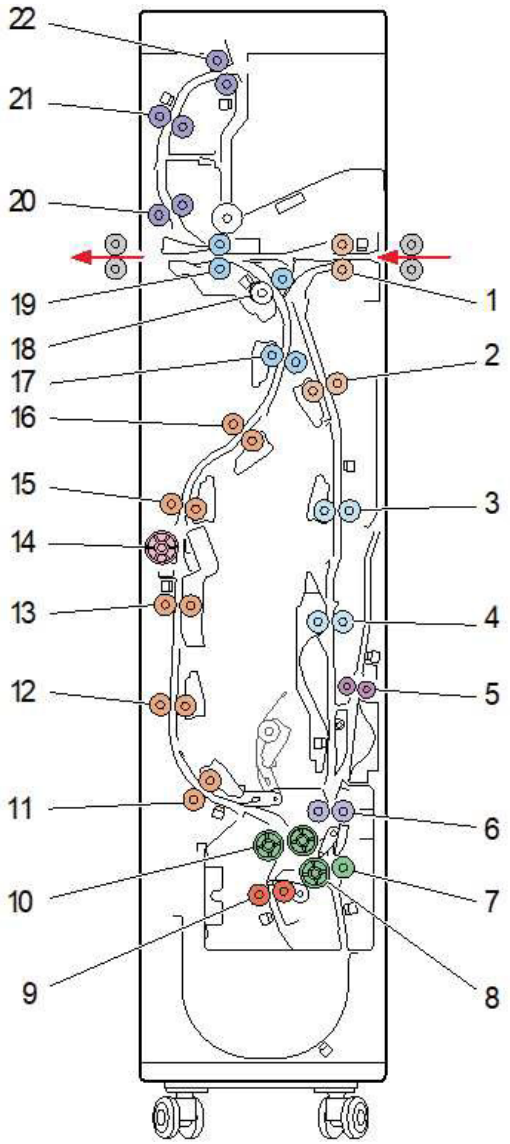

d3hjc9003

1	Entrance Roller 1	12	Transporting Roller 2
2	Entrance Roller 2	13	Transporting Roller 3
3	Pre-registration Roller 1	14	Crease Roller
4	Pre-registration Roller 2	15	Transporting Roller 4
5	Paper stacking roller	16	Transporting Roller 5
6	Registration Roller	17	Transporting Roller 6
7	FWD/RVS Roller 1	18	Transporting Roller 7
8	Folding Roller 1	19	Relay exit roller
9	FWD/RVS Roller 2	20	Transporting Roller 8
10	Folding Roller 1	21	Transporting Roller 9
11	Transporting Roller 1	22	Folding exit roller

(16-2)Conveying layout

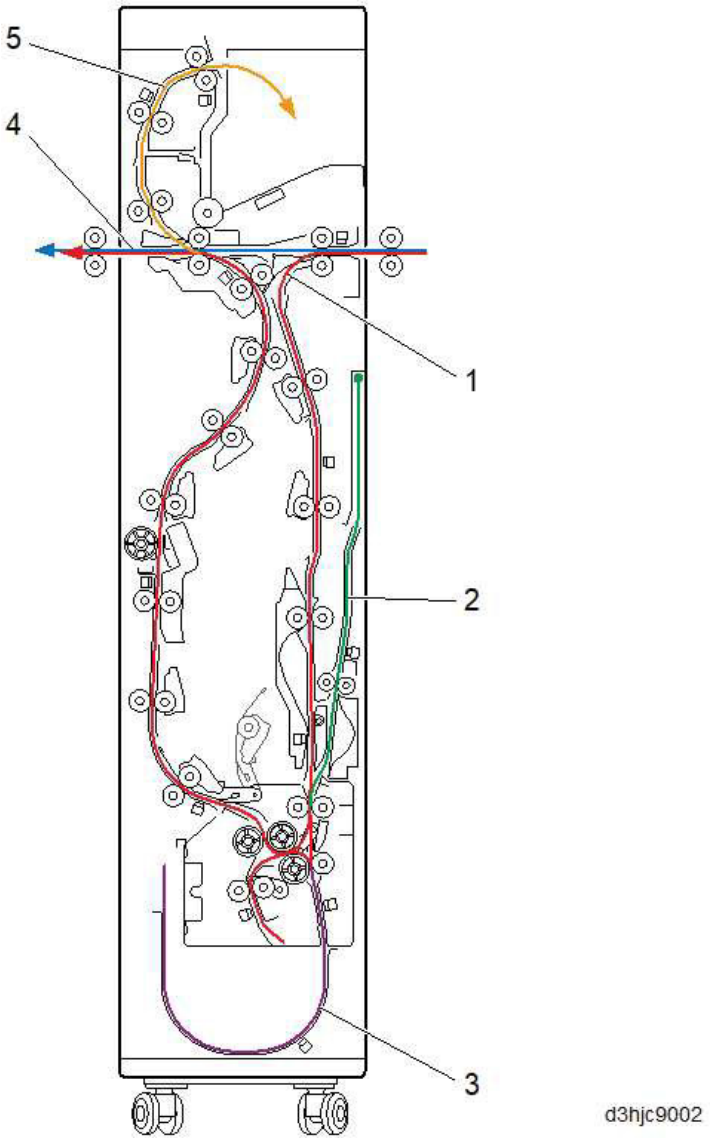

1 Folded Paper Path for Downstream Devices
2 Paper Stacking 5 Folded Paper Path for Tray
3 Purge
4 Straight Paper Transporting
5 Folded Paper Path for Tray

Folding Operation

This option provides 4 folding methods as below.

- Z-fold
- Letter Fold-out
- Letter Fold-in
- Half fold

The outline of each folding method is as follows.

Z-fold

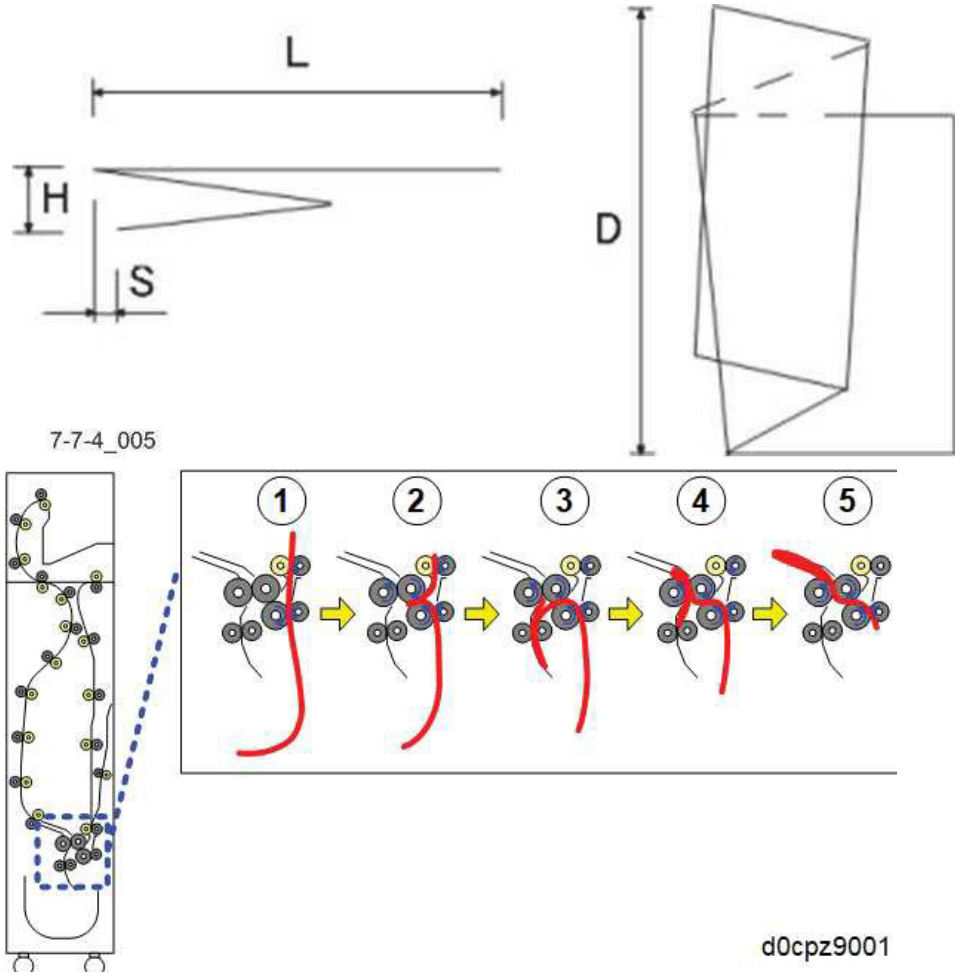

Letter Fold-out

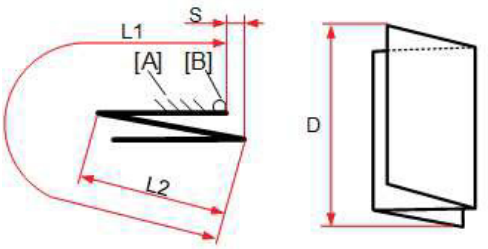

d0cpz9005

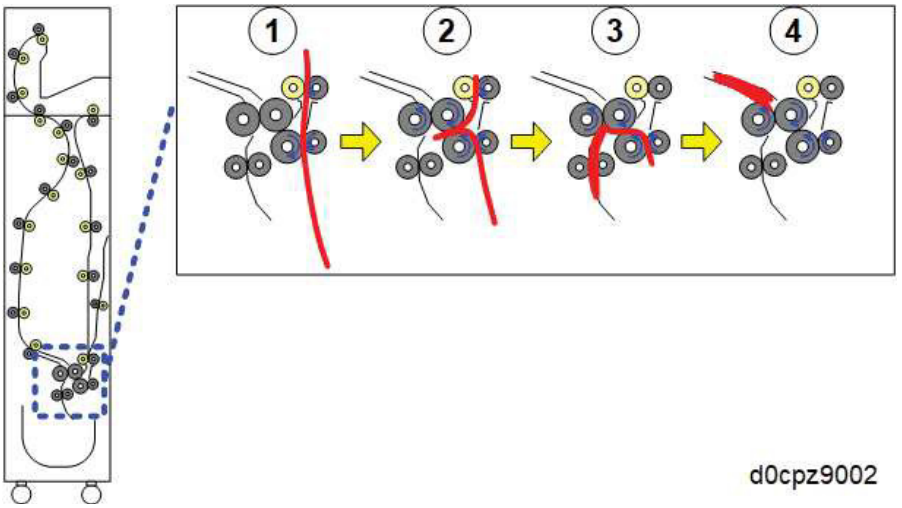

d0cpz9002

Letter Fold-in

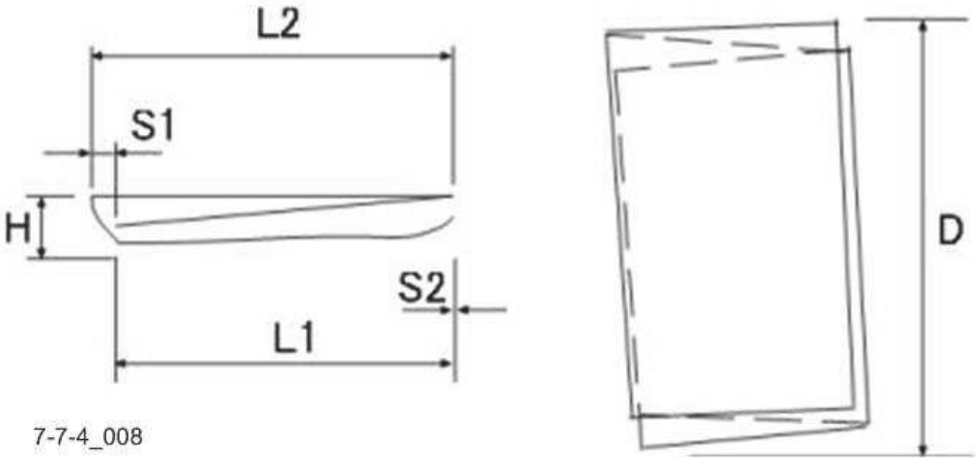

7-7-4_008

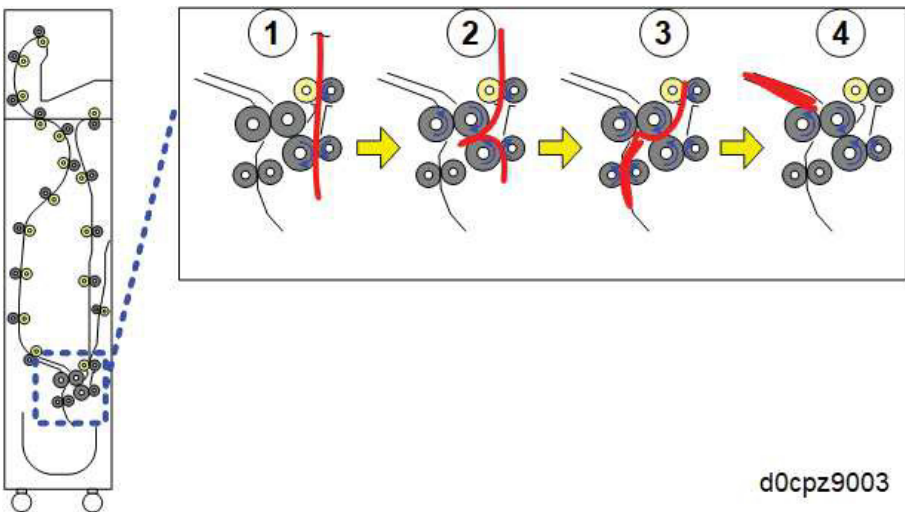

d0cpz9003

Half fold

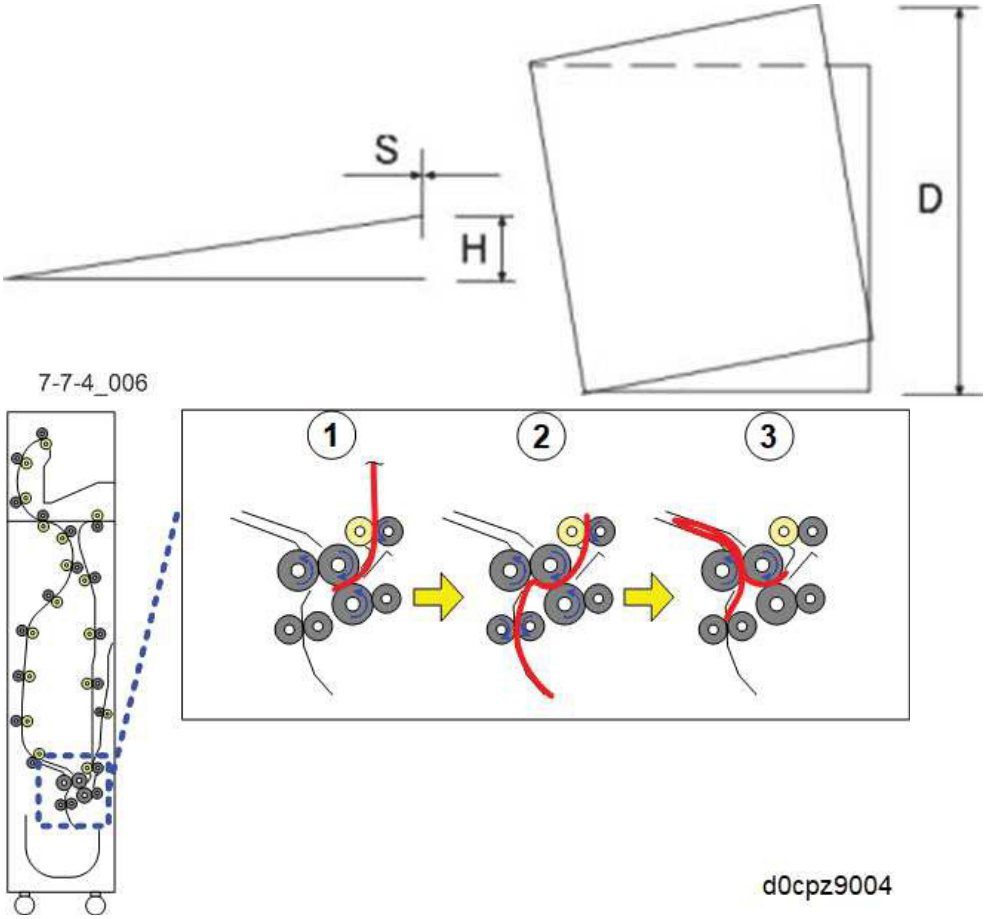

NOTE

Stacked paper can be folded up to 3 sheets by Letter Fold-out and Letter Fold-in.

Multi-sheet Folding

1st sheet

1 Pre-registration roller transports the 1st sheet. When the leading edge of the1st sheet hits the registration roller, then the 1st sheet goes to the downstream side.

2 When the trailing edge of the sheet comes out of the junction gate, the 1st sheet is switched back and transported to the paper stacking path.

3 When the leading edge of the sheet comes out of the registration roller, the paper stacking roller rotates in the opposite direction and then the 1st sheet waits for the 2nd sheet with touching the registration roller.

2nd sheet

1 Pre-registration roller transports the 2nd sheet. When the leading edge of the 2nd sheet hits the registration roller, then the 2nd sheet goes to the downstream side with overlapping with the 1st sheet.

2 By repeating the above, up to 3 sheets can be folded.

4 Maintenance

4 - 1 Precautions for the maintenance

(1)Precautions

Before disassembling the main unit, press the main power switch to turn the power off. Make sure that the power lamp on the operation panel is off and unplug the power cord from the wall outlet. Then, start the disassembly.

Even after power off and unplug, some capacitors on power supply board may still have electro charge, so pay attention not to touch those parts.

Wait more than 5 seconds between the power off and on.

When handling the PWBs (printed wiring boards), do not touch parts with bare hands. Make sure not to damage the PWB.

If ICs are mounted on the PWB, do not touch them by hand or something charged with electrostatic.

In case of disconnecting the connector from the PWB, disconnect it straight from the PWB and do not disconnect it at slant way.

Make sure to release the hook before disconnecting the connector with the hook.

Take care not to pinch up the wire and cable.

Use the original screws when reassembling the parts once disassembled.

If the types and the sizes of screws are not sure, refer to the parts list.

(2)Storage and handling of the drum

Note the following when handling and storing the drum.

When detaching the drum unit, never expose the drum surface to strong direct light.

Store in the range of ambient temperature of -20 to 40°C (–4°F to 104°F) and ambient humidity of 85% RH or less.

Avoid storing the drum unit in the place where the temperature and humidity suddenly change even if these changes are within the tolerable range.

Avoid exposure to any substance which is harmful or may affect the quality of the drum.

Do not hit the drum surface with any object.

Make sure not to touch the drum surface with bare hands or gloves.

If the drum is touched by hands or stained with oil, clean it.

(3)Storage of the toner container

Store the toner container in a cool and dark place.

Do not place the toner container under direct sunshine or in a damp environment.

4 - 2 Maintenance parts

(1)Maintenance kits

Main unit

Name used in service manual	Name used in parts list	Quantity	Part No.
MK-6345	MK-6345/MAINTENANCE KIT		1702XF0KL0
(600,000 images)	• DRUM (H) UNIT	1	
	• DLP (H) K UNIT	1	
	• FUSER UNIT H2	1	
	• TRANSFER UNIT MONO	1	
	• ROLLER SECONDRY TRANSFER ASSY	1	
	• PULLEY FEED P ASSY	2	
	• PULLEY PICKUP	2	
	• ROLLER RETARD ASSY	2	
	• PULLEY FEED ASSY	1	
	• RETARD ROLLER ASSY	1	
	• FILTER TOP	1	

(2)Executing the maintenance mode after replacing the maintenance kit

(2-1)Maintenance modes that need to run after replacing the above maintenance kit.

Low-end model

Section	Mode Number	Maintenance item
Replacing settings	U251	Maintenance counter clear (Clear)
	U127	Transfer counter clear (Clear)
Image adjustment	U464	ID correction operation setting (Calib)
	U469	Primary transfer unit initial setting (Auto)
	U410	Auto halftone adjustment
Maintenance	U251	Maintenance counter clear (Clear)

High-end Model

Section	Mode Number	Maintenance item
Replacing settings	U119	Drum unit initial settings
	U140	Developer bias adjustment (AC Calib/Calibration)
	U469*1	Primary transfer unit initial setting (Belt Initialize)
	U127*1	Transfer counter clear (Clear)
Image adjustment	U464	ID correction operation setting (Calib)
	U469	Primary transfer unit initial setting (Auto)
	U412	Adjusting the uneven density (Normal Mode)
	U464	ID correction operation setting (Calib)
	U410	Auto halftone adjustment
Maintenance	U251	Maintenance counter clear (Clear)

*1: MK-8515A

(2-2)Items that perform after replacing the unit

Drum unit

Low-end model

Section	Mode Number	Maintenance item
Image adjustment	U464	ID correction operation setting (Calib)
	U469	Primary transfer unit initial setting (Auto)
	U410	Auto halftone adjustment

High-end Model

Section	Mode Number	Maintenance item
Replacing settings	U119	Drum unit initial settings
	U140	Developer bias adjustment (AC Calib/Calibration)
Image adjustment	U464	ID correction operation setting (Calib)
	U469	Primary transfer unit initial setting (Auto)
	U412	Adjusting the uneven density (Normal Mode)
	U464	ID correction operation setting (Calib)

Developer unit

Low-end model

Section	Mode Number	Maintenance item
Image adjustment	U464	ID correction operation setting (Calib)
	U469	Primary transfer unit initial setting (Auto)
	U410	Auto halftone adjustment

High-end Model

Section	Mode Number	Maintenance item
Replacing settings	U140	Developer bias adjustment (AC Calib/Calibration)
Image adjustment	U464	ID correction operation setting (Calib)
	U469	Primary transfer unit initial setting (Auto)
	U410	Adjusting the halftone automatically

Primary transfer unit

Section	Mode Number	Maintenance item
Replacing settings	U469	Primary transfer unit initial setting (Belt Initialize)
Image adjustment	U464	ID correction operation setting (Calib)
	U469	Primary transfer unit initial setting (Auto)
	U410	Auto halftone adjustment

Secondary transfer roller unit

Section	Mode Number	Maintenance item
Replacing settings	U127	Transfer counter clear (Clear)
Image adjustment	U464	ID correction operation setting (Calib)
	U469	Primary transfer unit initial setting (Auto)
	U410	Auto halftone adjustment

MC roller

Section	Mode Number	Maintenance item
Replacing settings	U930	Charging roller counter clear (Clear)
Image adjustment	U464	ID correction operation setting (Calib)
	U410	Auto halftone adjustment

Feed roller/MP feed roller

Section	Mode Number	Maintenance item
Replacing settings	U901	Feed cassette counter clear (Clear)

4 - 3 Maintenance parts replacement procedures

Replacement of the maintenance kit is required after about 600,000 images. The message [Replace MK.] appears at the replacement timing.

Execute maintenance mode U251 to reset the count after replacing the maintenance kit in the following procedures.

(1)Cassette paper feed section

(1-1)Detaching and attaching the pickup pulley and paper feed roller

1 Remove cassette.

1 Pull out the upper cassette (a) from the main unit (c) and remove it in the direction of the arrow.

2 Pull out the lower cassette (b) from the main unit (c) and remove it in the direction of the arrow.

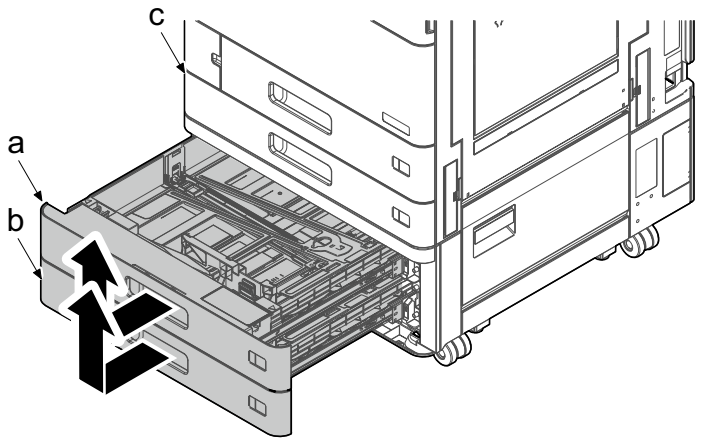

Notes for attaching

Insert the positioning parts (b) and (d) into the rail shaft and pin (c) when attaching the cassette (a).

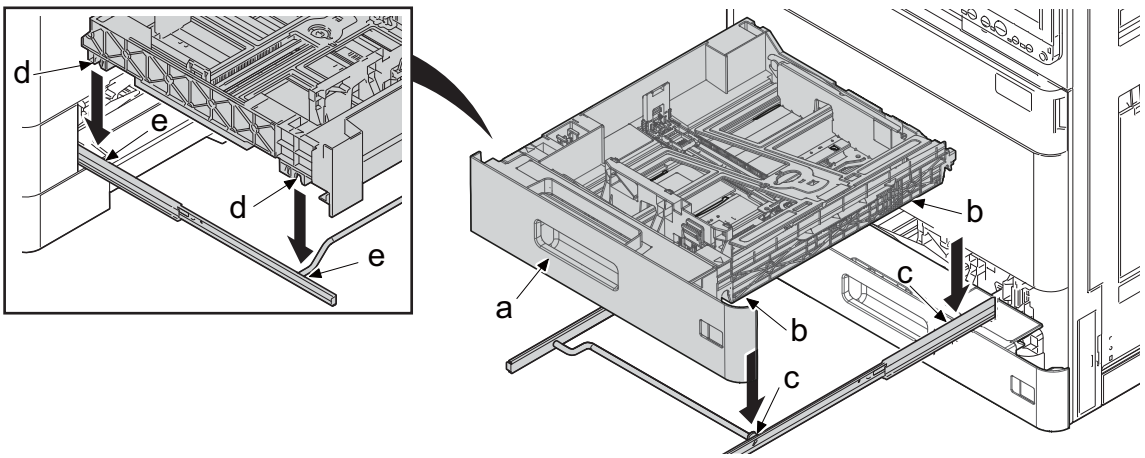

3 Pinch the lock lever (a) and pull the primary paper feed unit (c) from the upper paper feed section of the main unit (b).

4 Pinch the lock lever (d) and pull the primary paper feed unit (e) from the lower paper feed section of the main unit (b).

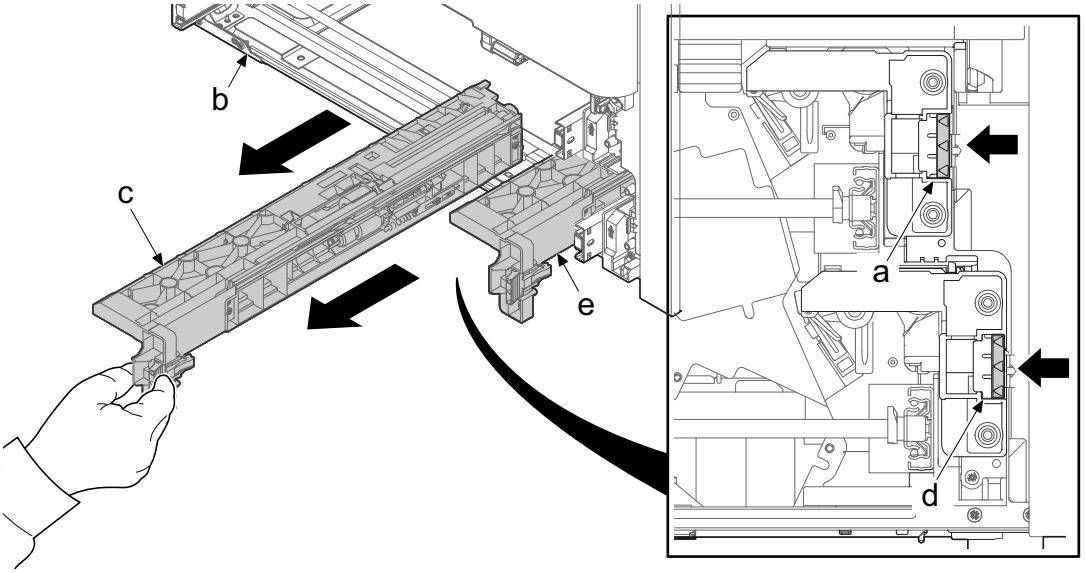

5 Release hooks (a), and remove retard roller (b) from the bushing (c).

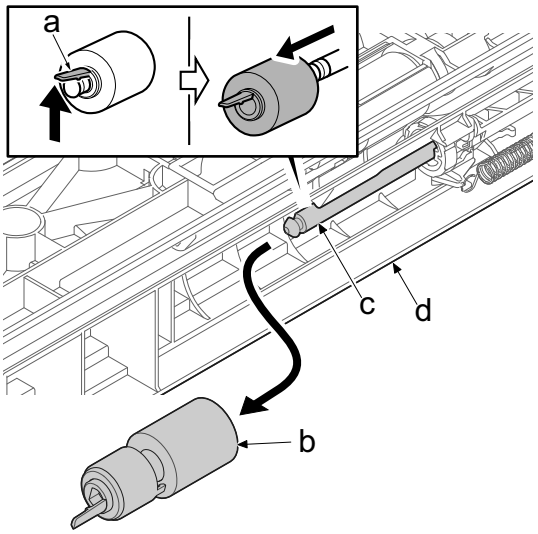

6 Turn over the primary paper feed unit (a).

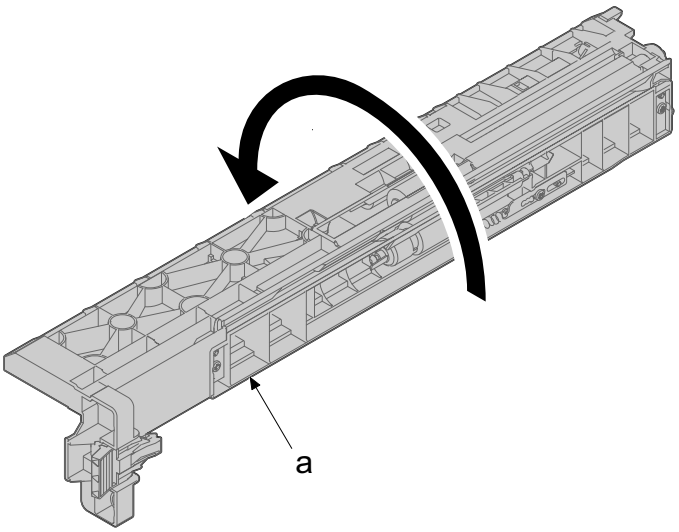

7 Slide the feed cover (b) from the primary feed unit (a).

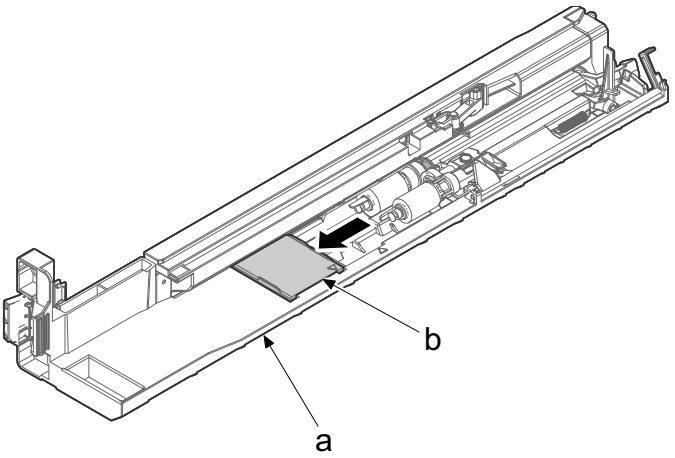

8 Release the hooks (a), and remove pickup pulley (b) and paper feed roller (c) from the bushing.

- Take pickup pulley (b) away lifting up it slightly.

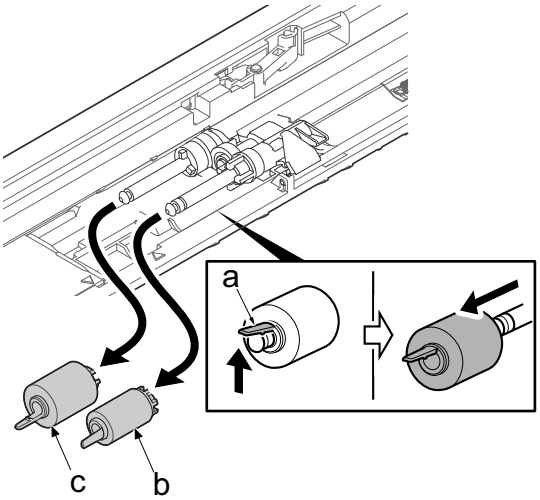

9 Attach the new paper feed roller.

10 Attach the new pickup roller.

11 Turn over the primary paper feed unit (d) again.

12 Attach the new retard pulley.

IMPORTANT

- When replacing the new paper feed roller, pickup pulley or retard pulley, take care not to touch the roller surface.
- After replacing with the new pickup roller and feed roller, reattach the feed cover (a) to the position where it is aligned to the triangle mark (b).

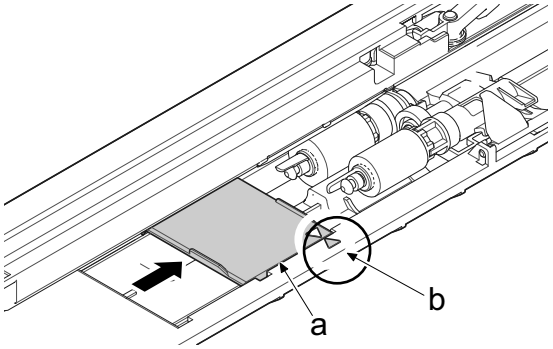

Notes for attaching

When installing the primary paper feed unit (a), align the protrusion (b) at the lower part of the primary feed unit to the guide (c) and align the protrusion (d) at the upper part of the primary feed unit to the guide (e) of the main unit.

Reinstall the primary paper feed unit in case that [Cassette xx error] comes up.

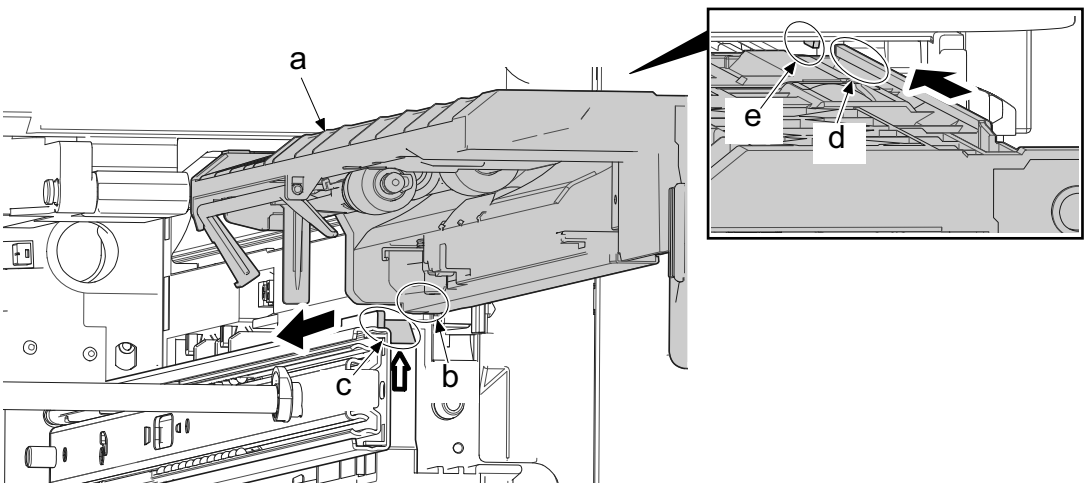

Execute the following setting after replacing the feed roller.

Clearing the maintenance counts (maintenance mode U251): Clear

(1-2)Detaching and attaching the regist cleaner

1 Open the front cover (a) slightly.

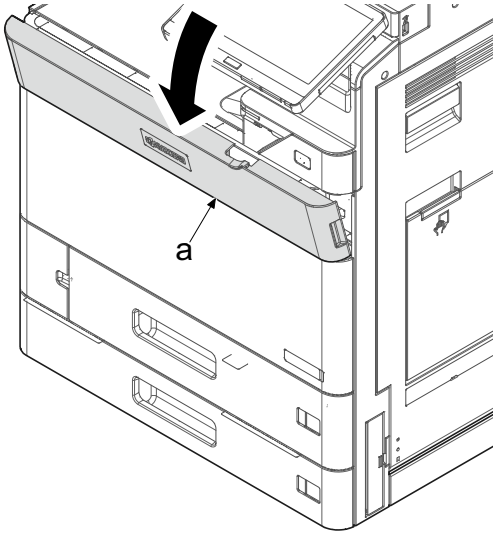

2 Open the front cover (a) and then open the front cover for maintenance (b) while grasping the upper left and right part.

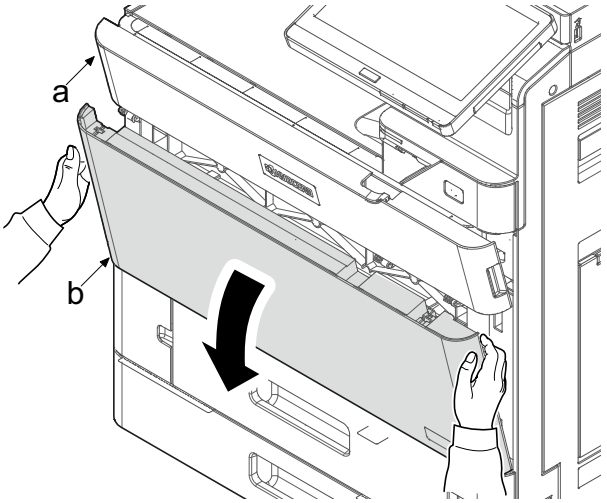

3 Open inner cover (a) pulling left and right lever (b) on the cover.

IMPORTANT

When opening the inner cover (a), be careful not to remove the retainer sheet.

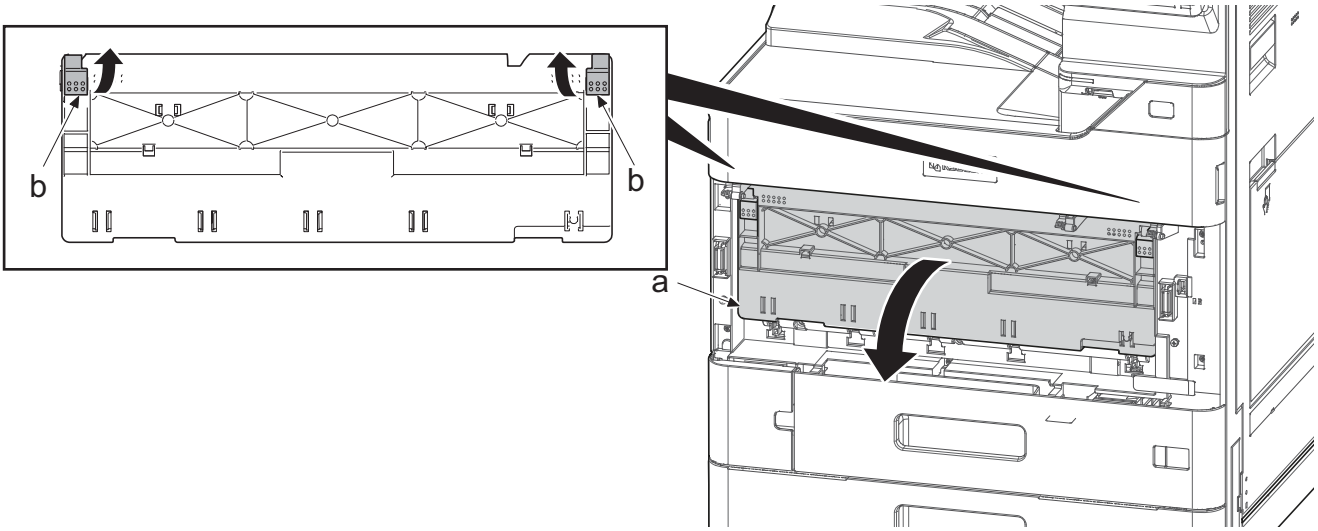

IMPORTANT

When closing the inner cover (a), push the part A to the position where the lever (b) and covers are the same level.

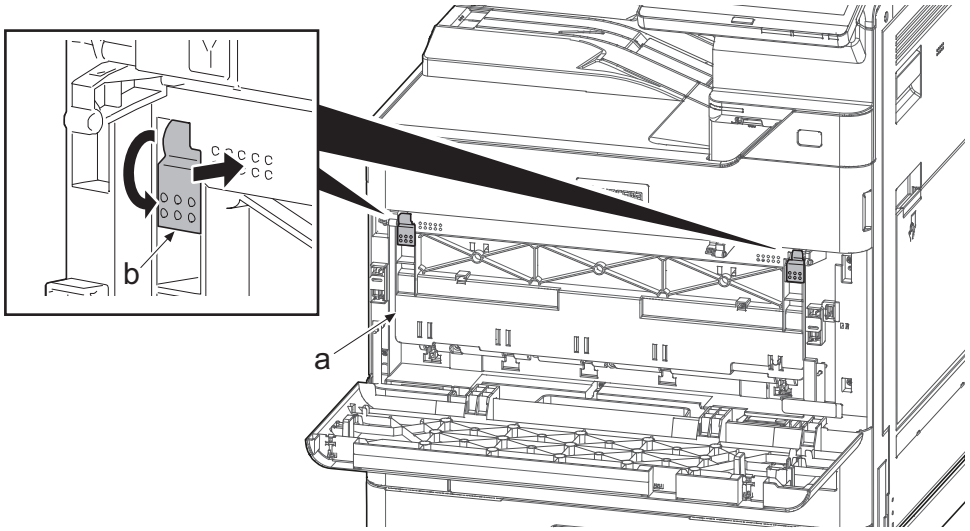

4 Pull out the regist cleaner (a) by holding the handle.

5 Check the sponge on the regist cleaner (a) and clean or replace it.

6 Reattach the parts in the original position.

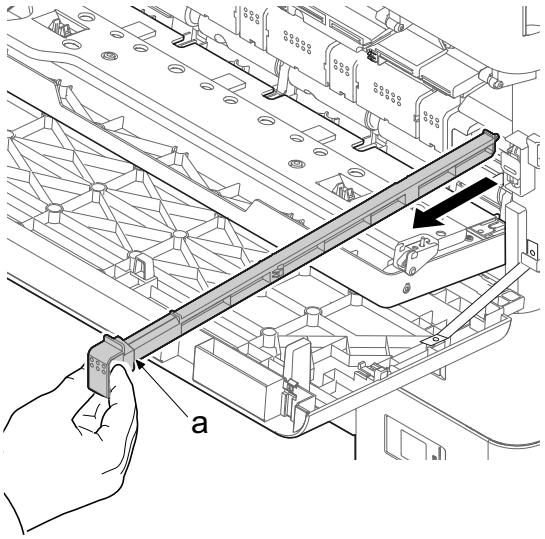

(2)MP paper feed section

(2-1)Detaching and attaching the MP paper feed roller

1 Open the manual feed tray (a).

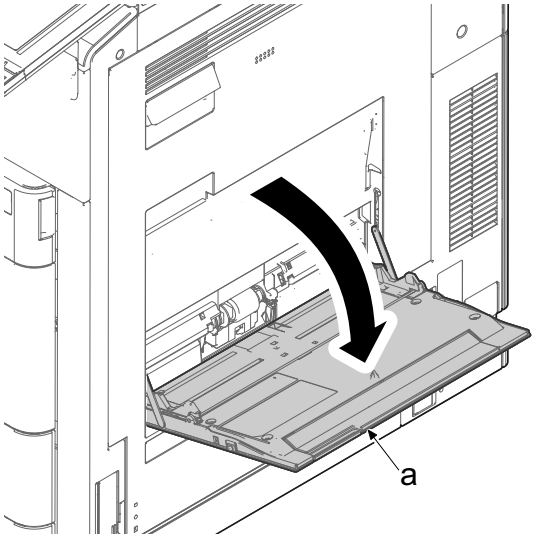

2 Pinch the holder (a) and remove the MP feed roller (b) in the direction of the arrow.

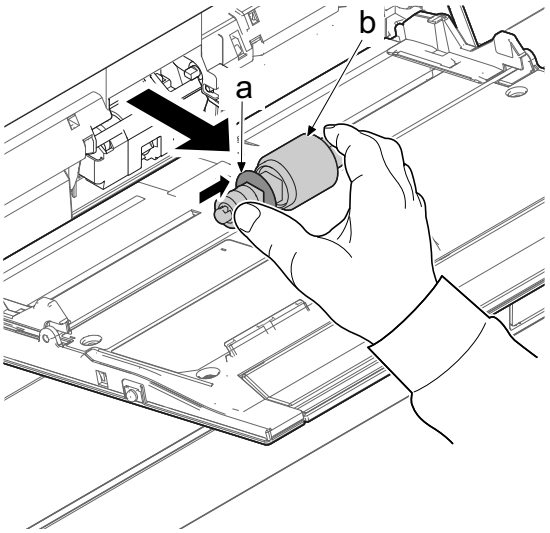

Detaching and attaching the MP paper feed roller

1 Push MP feed roller holder (c) to where the hook (b) can be seen.

2 Release hook (b) with flat head screwdriver and rotate MP feed roller holder (c) to the direction of arrow.

3 Take MP feed roller away pulling MP feed roller holder (c).

4 Attach the new MP paper feed roller (e).

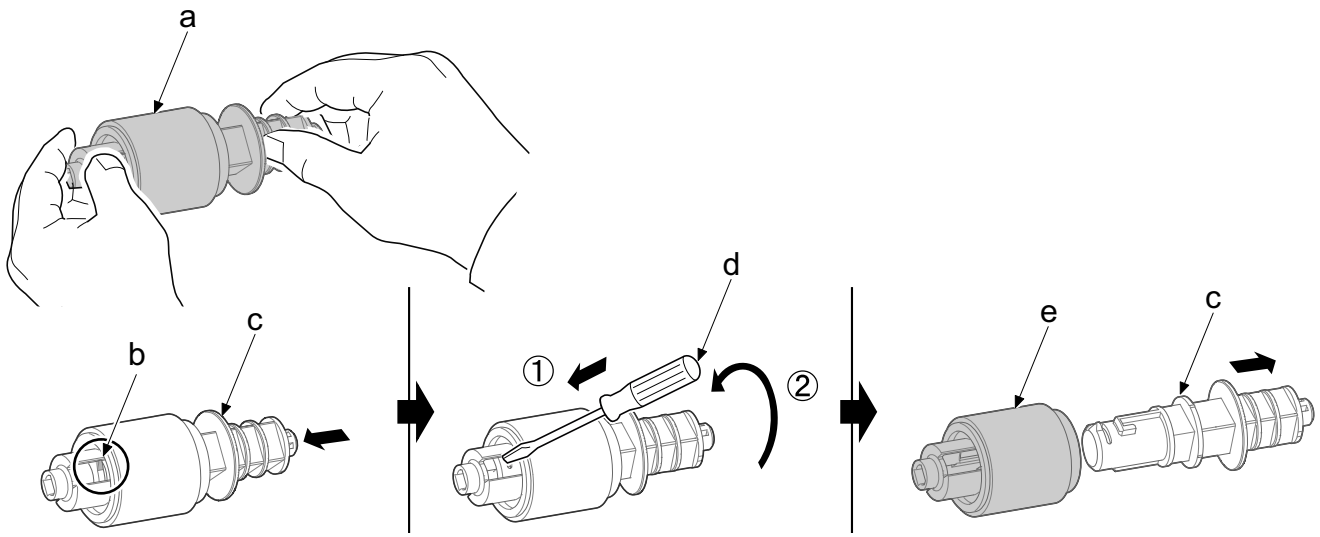

Execute the following setting after replacing the MP paper feed roller.

- Clearing the maintenance counts (maintenance mode U251): Clear

(2-2)Detaching and attaching the MP retard roller

1 Remove the MP separation pulley (a) in the direction of the arrow.

2 Attach the new MP paper feed roller.

3 Attach the new retard pulley.

4 Reattach the parts in the original position.

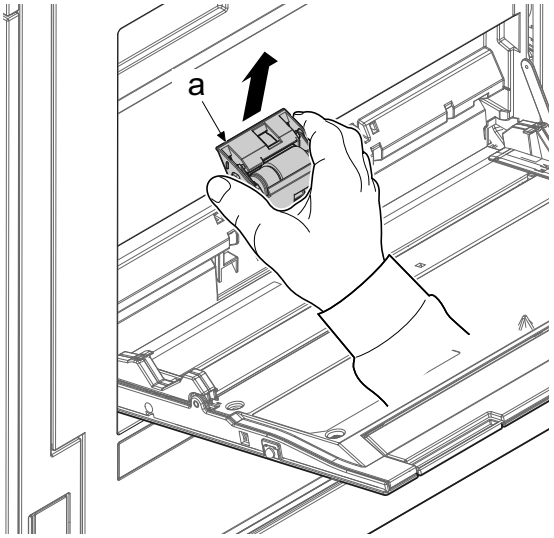

IMPORTANT

When replacing the new MP separation pulley or MP paper feed roller, take care not to touch the roller surface.

(3)Transfer section

(3-1)Detaching and attaching the primary transfer unit

1 Open the right cover (a) of the main unit (b).

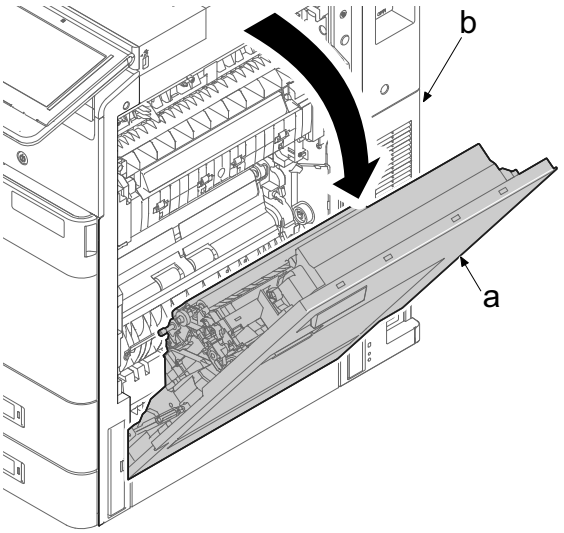

Notes for detaching

Before installing the primary transfer unit (a), confirm if the pressure release lever (b) is aligned to the right edge of the primary transfer unit cover (c).

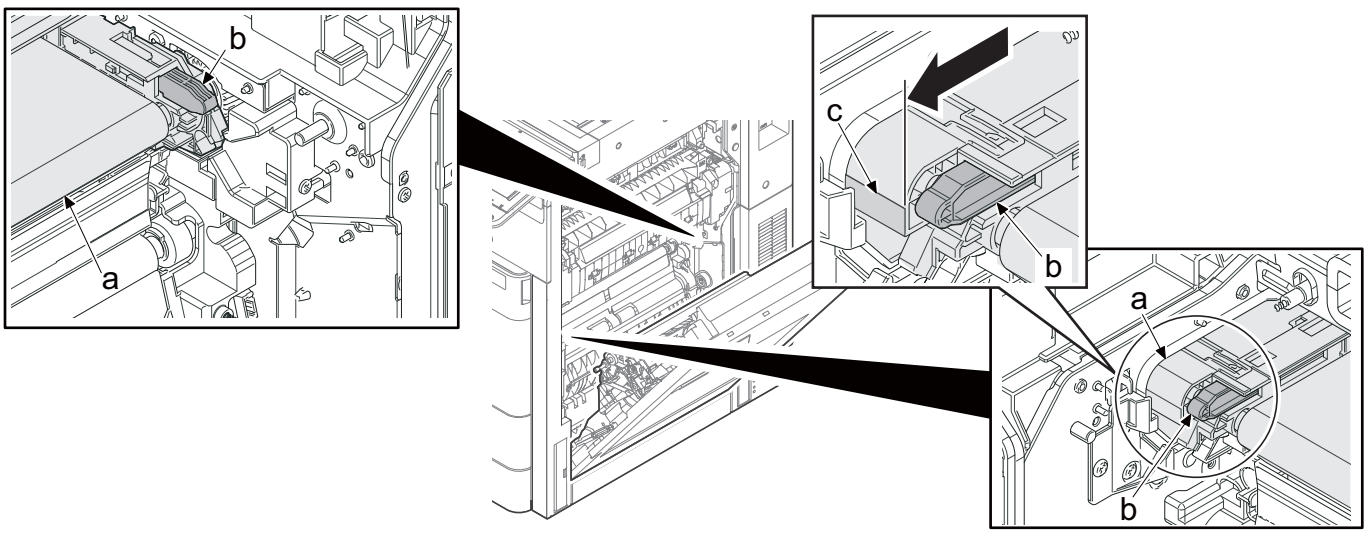

2 Open the front cover for maintenance while slightly opening the front cover.

3 Open the inner cover.

IMPORTANT

When opening the inner cover (a), be careful not to remove the retainer sheet.

4 Push in the release lever (b) and grasp the handle (c), and then pull out the primary feed unit in the direction of the arrow.

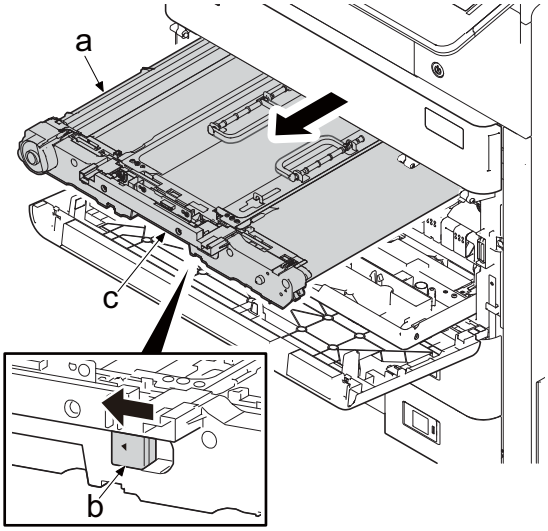

5 After that, hold the upper side handle (b) and detach the primary feed unit (a) in the direction of the arrow.

6 Check the primary transfer unit (a) and clean or replace it.

7 Reattach the parts in the original position.

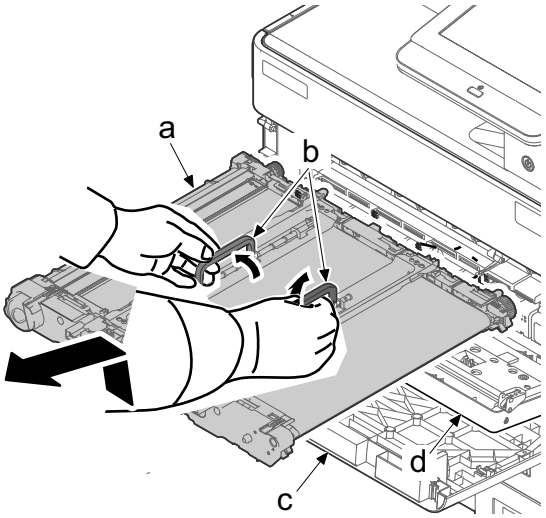

IMPORTANT

Take care not to hit the primary transfer belt to the inner cover (d) and front cover for maintenance (c).

Notes for attaching

Before installing the primary transfer unit (a), confirm if the pressure release lever (b) is aligned to the right edge of the primary transfer unit cover (c).

If it shifts to the side A, it will hit the lever when inserting the unit.

If it shifts to the B side, the transfer roller is pressed and this may damage the belt or drum when installing the unit.

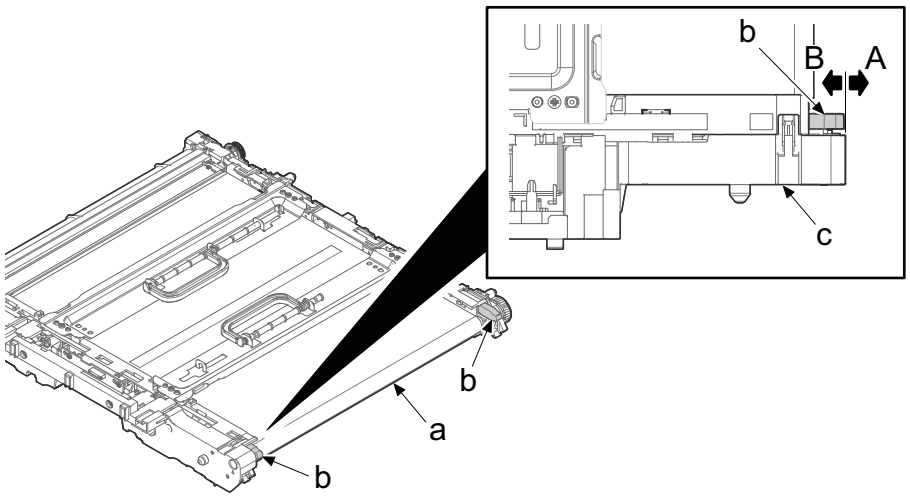

IMPORTANT

When installing the primary transfer unit (a), hold the handle (f) by both hands and install the unit aligning the hook (b) on the unit to rail (c) in main unit.

- Slide the unit straightforward touching the parts (A) and (B) that is both side of rib (d) on the upper front of the unit. Otherwise, for example, install the unit holding release lever (e), the unit cannot be installed straightforward. It may break connectors on both unit and main unit and cause service call below.

C1950 Primary transfer EEPROM error

C2840 Belt cleaning motor error

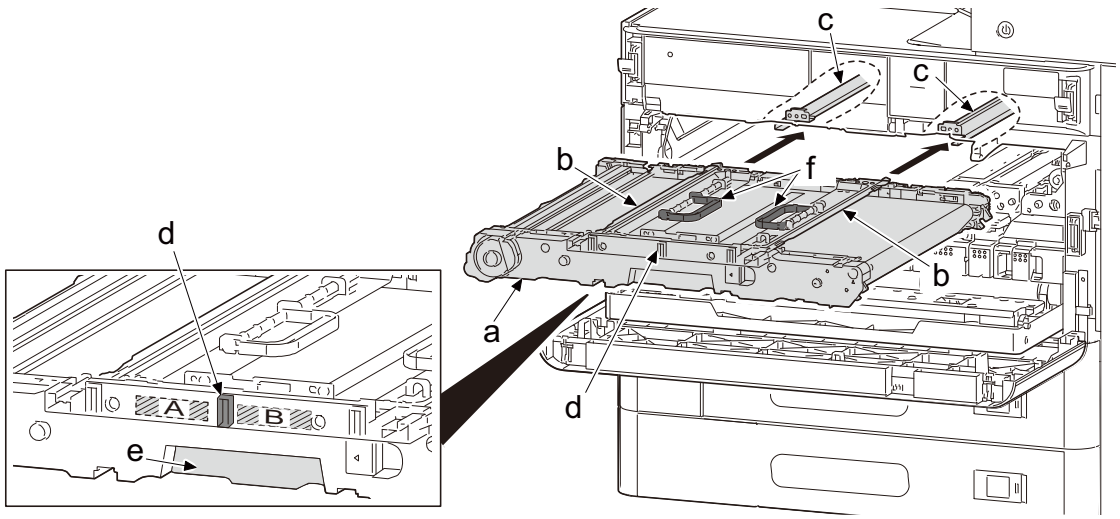

Execute the following setting after replacing the primary transfer unit.

- Primary transfer unit initial setting (maintenance mode U469): Belt Initialize
- ID correction operation setting (maintenance mode U464): Calib
- Auto halftone adjustment (maintenance mode U410)

(3-2)Detaching and attaching the secondly transfer unit

1 Open the right cover (d).

2 Release front/rear hooks (c) with holding transfer guide (a) and pushing front/rear the ribs of arm parts (b) to the direction of arrow.

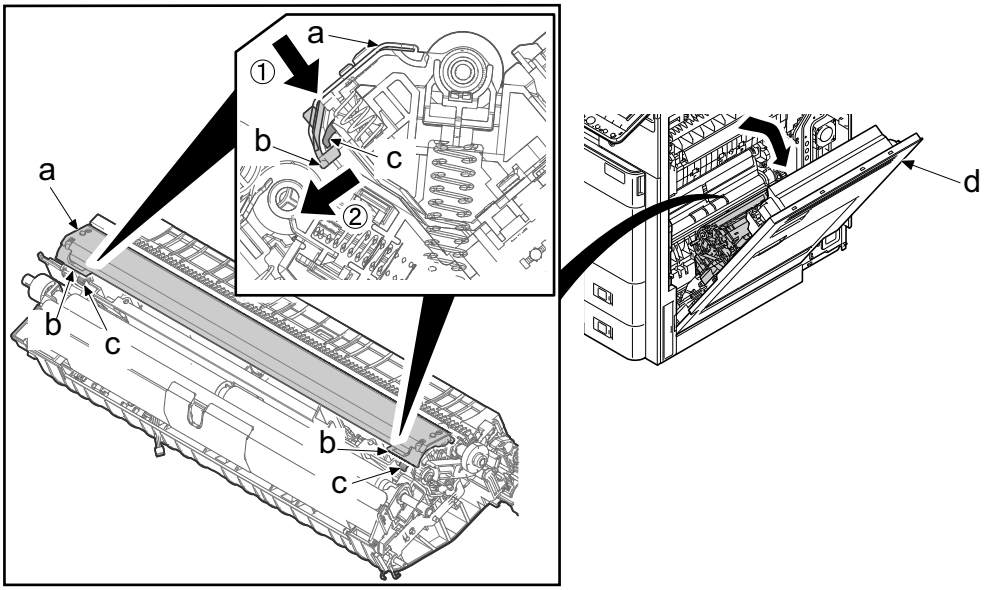

3 Push the lock lever (b) toward the machine rear side.

4 Release the hooks (c) and rotate the lock lever (b) in the direction of the arrow.

5 Detach the secondary transfer roller unit (d) while lifting up the machine front side.

6 Check the secondary transfer roller unit (d) and clean or replace it.

7 Reattach the parts in the original position.

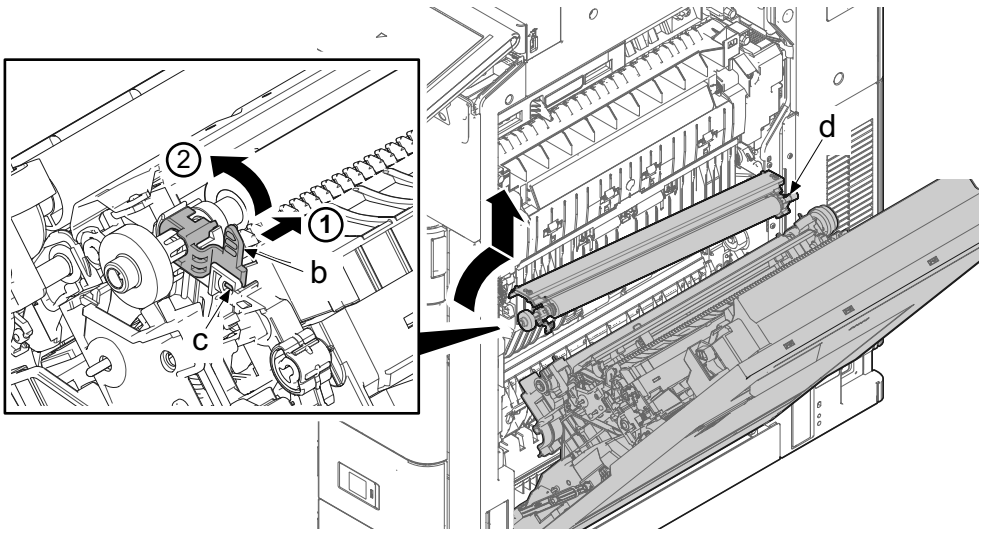

Execute the following setting after replacing the secondary transfer unit.

- Transfer counter clear (maintenance mode U127): Clear
- ID correction operation setting (maintenance mode U464): Calib
- Auto halftone adjustment (maintenance mode U410)

(3-3)Detaching and attaching the secondary transfer roller unit

In case that not to remove the transfer guide but only secondly transfer roller

1 Open the right cover (a).

2 Release hooks (c) of the front/rear arm by holding up front/rear lever of the transfer guide and pick the transfer guide (d) up.

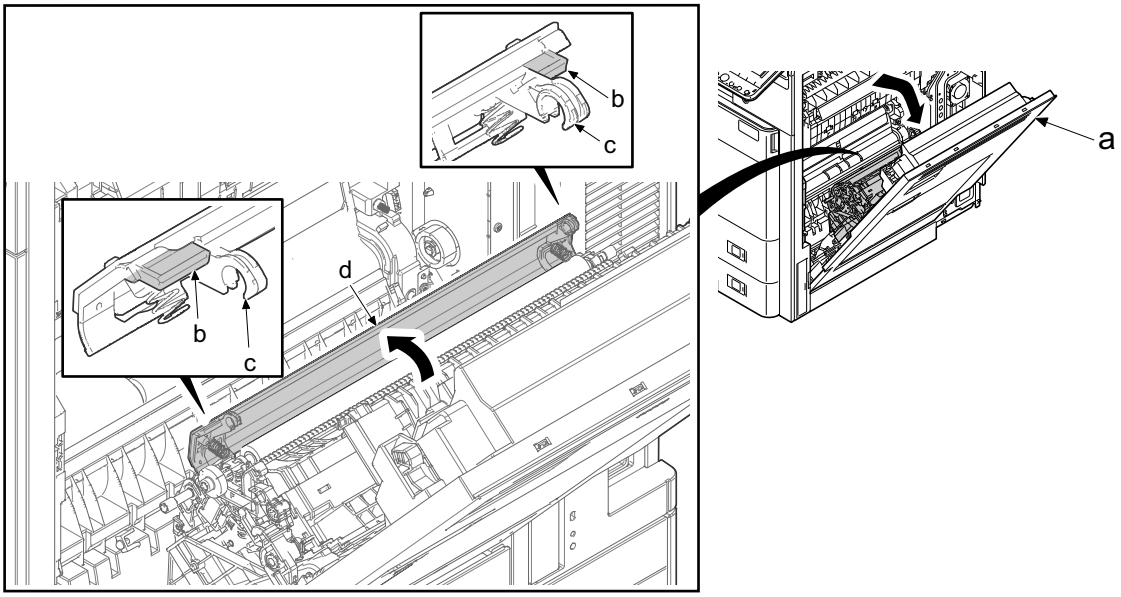

3 Push the lock lever (b) toward the machine rear side.

4 Release the hooks (c) and rotate the lock lever (b) in the direction of the arrow.

5 Detach the secondary transfer roller unit (d) while lifting up the machine front side.

6 Check the secondary transfer roller (d) and clean or replace it.

7 Reattach the parts in the original position.

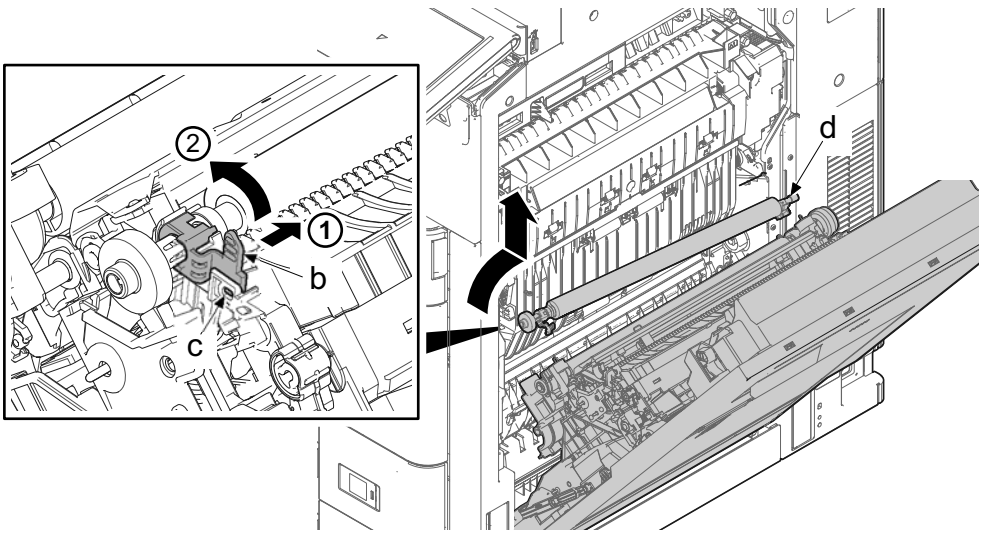

Execute the following setting after replacing the secondary transfer unit.

- Transfer counter clear (maintenance mode U127): Clear
- ID correction operation setting (maintenance mode U464): Calib
- Auto halftone adjustment (maintenance mode U410)

(4)Drum section

(4-1)Detaching and attaching the drum unit

1 Open the front cover (a) slightly.

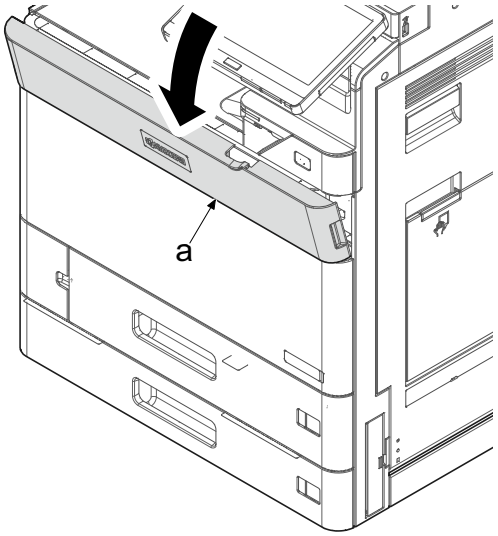

2 Open the front cover (a) and then open the front cover for maintenance (b) while grasping the upper left and right part.

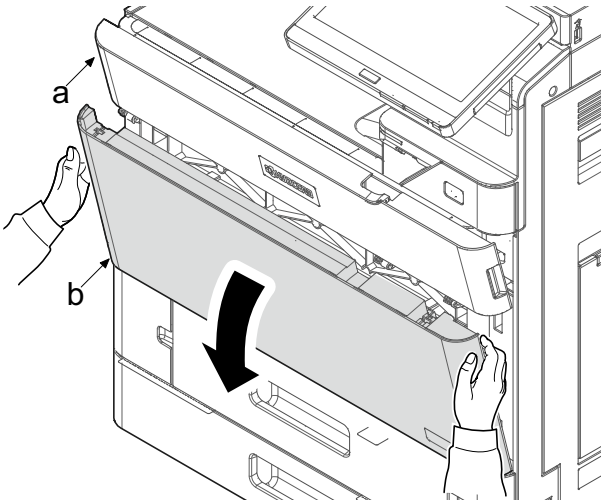

3 Open inner cover (a) pulling left and right lever (b) on the cover.

IMPORTANT

When opening the inner cover (a), be careful not to remove the retainer sheet.

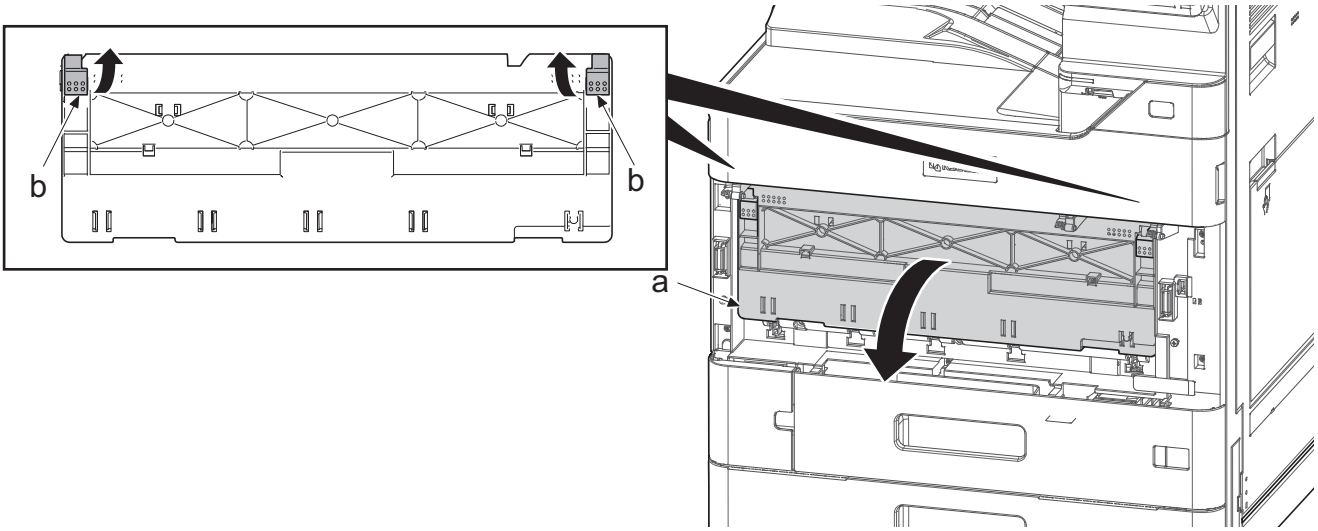

IMPORTANT

When closing the inner cover (a), push the part A to the position where the lever (b) and covers are the same level.

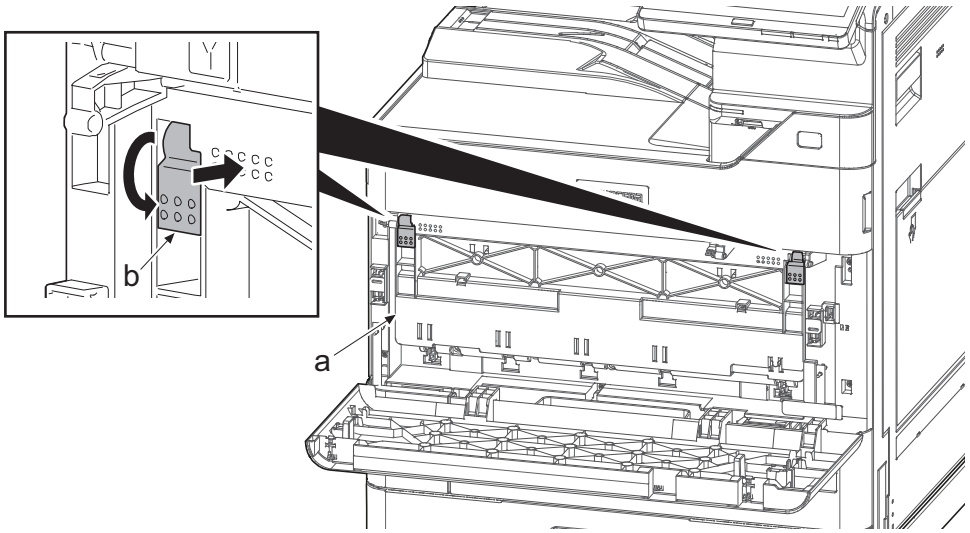

4 Push up the lock lever (a) and remove four drum units (b).

5 Attach the new drum units.

6 Reattach the parts in the original position.

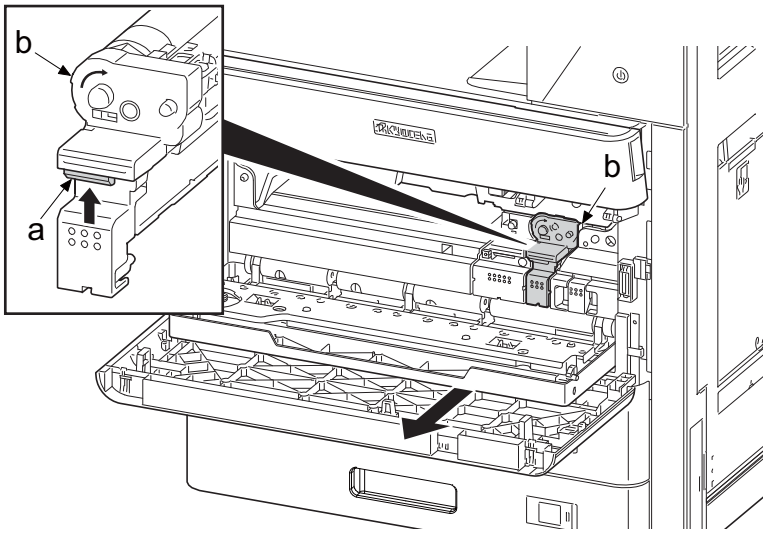

IMPORTANT

Slide the unit straightforward touching projection (a) on lower front of the unit.

Otherwise, the unit cannot be installed straightforward. It may break connectors on both unit and main unit and cause service call below.

- C7901 Drum unit K EEPROM error

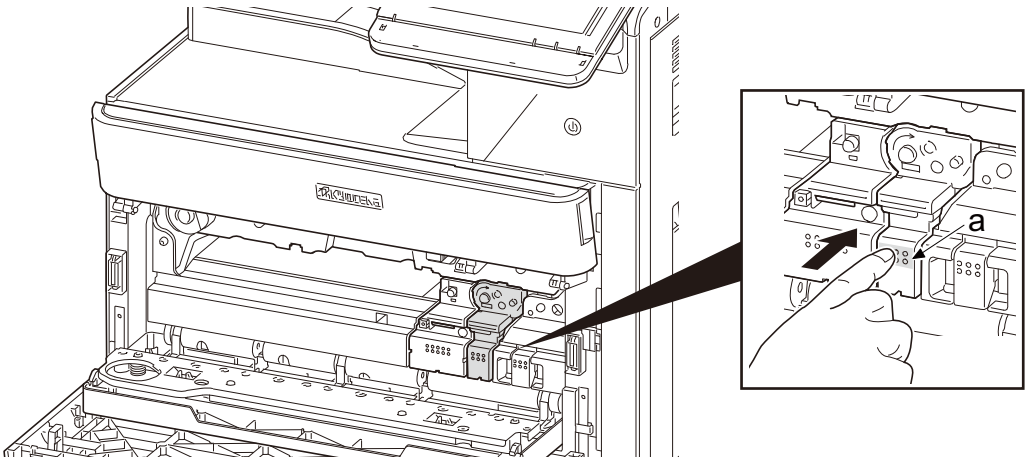

After drum replacement, close the cover then turn on machine.

Drum refresh starts automatically.

Execute the following setting after machine is ready.

- Drum unit initial setting (maintenance mode U119): Execute
- ID correction operation setting (maintenance mode U464): Calib
- Primary transfer unit initial setting (maintenance mode U469): Auto
- ID correction operation setting (maintenance mode U464): Calib
- Half tone auto adjustment (maintenance mode U410)

(4-2)Detaching and attaching the main charge roller unit

1 Open the front cover slightly.

2 Open the front cover for maintenance.

3 Open the inner cover.

IMPORTANT

When opening the inner cover (a), be careful not to remove the retainer sheet.

4 Open the right cover.

5 Detach the drum unit (a).

6 Lay down the drum unit (a).

7 Push the lock lever (b).

8 Pull up the main charge roller unit (c) while pressing it and remove it from the drum unit (a) in the direction of the arrow.

9 Check the main charge roller unit (c) and clean or replace it.

10 Reattach the parts in the original position.

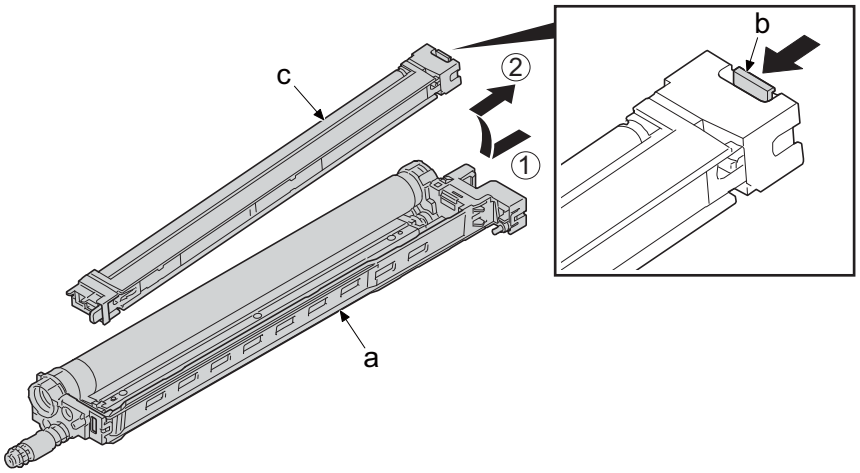

IMPORTANT

1 Install the main charge roller unit (a) in the drum unit (c) while releasing the main charger roller release lever (b).

2 Insert the main charger release lever (b) into the aperture and press down A part to check it clicks to lock.

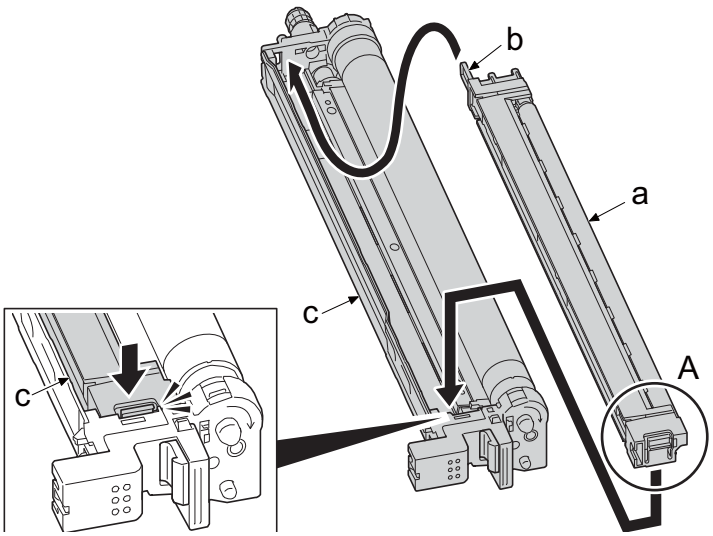

Execute the following setting after replacing the main charge roller.

- Main charger roller counter clear (maintenance mode U930): Clear
- ID correction operation setting (maintenance mode U464): Calib
- Auto halftone adjustment (maintenance mode U410)

(5)Developer section

(5-1)Detaching and attaching the developer unit

1 Open the front cover (a) slightly.

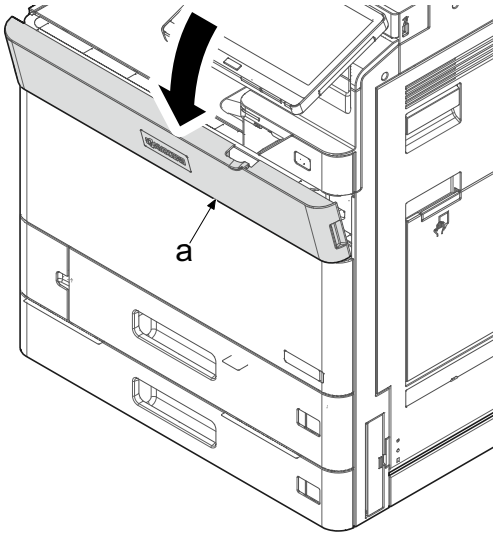

2 Open the front cover (a) and then open the front cover for maintenance (b) while grasping the upper left and right part.

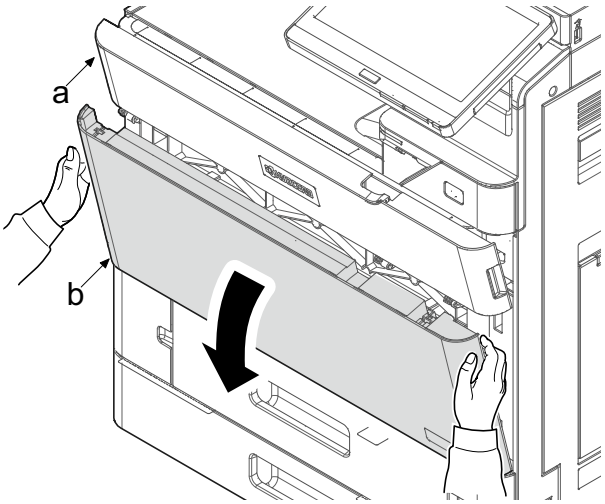

3 Open to pull left and right lever (b) of the inner cover (a)

IMPORTANT

When opening the inner cover (a), be careful not to remove the retainer sheet.

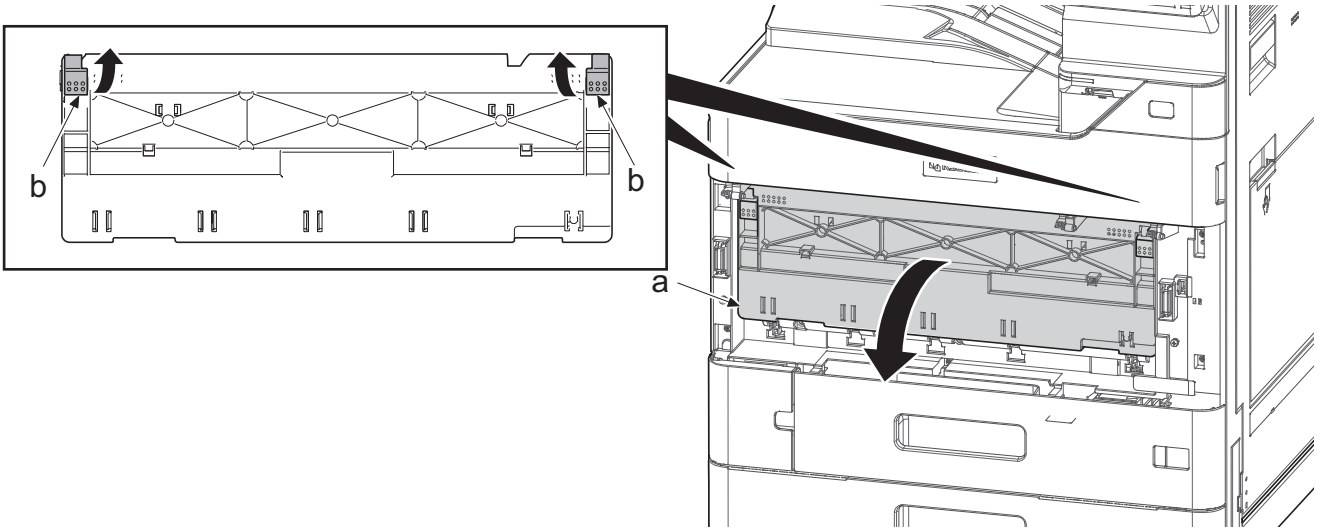

4 Push up the lock lever (a) and remove four developer units (b) (Y,C,M,K).

5 Attach the new developer units.

6 Reattach the parts in the original position.

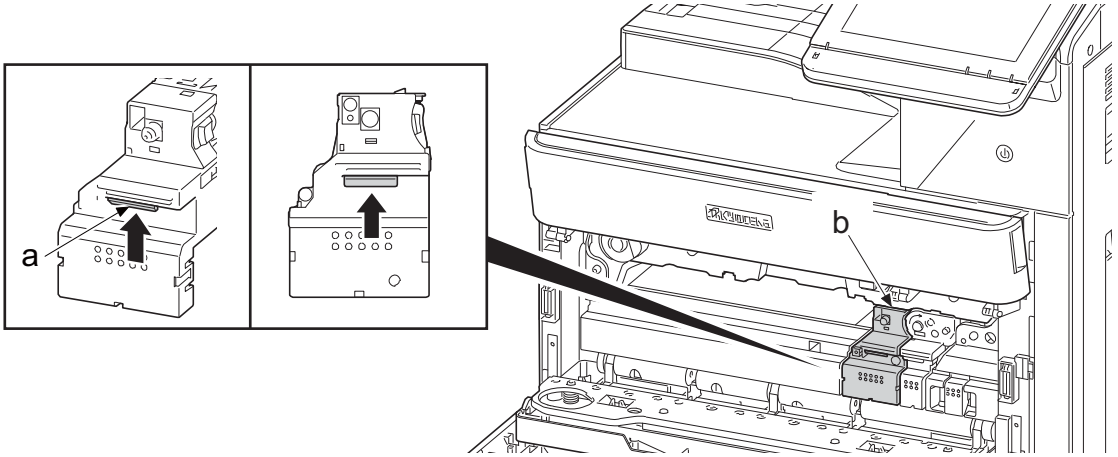

IMPORTANT

Slide the unit straightforward touching projection (a) on lower front of the unit.

Otherwise, the unit cannot be installed straightforward. It may break connectors on both unit and main unit and cause service call below.

- C7911 Developer unit K EEPROM error
- Image failure with developer leaking

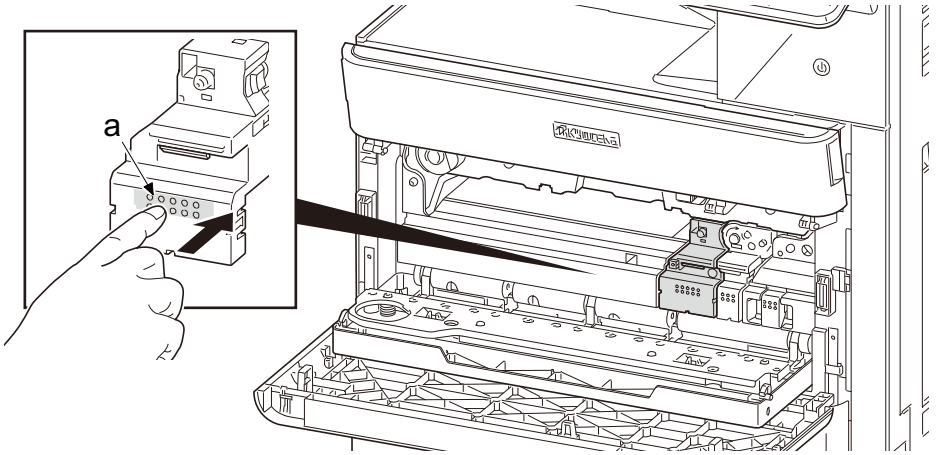

After developer replacement, close the cover then turn on machine.

Auto developer aging correction and others start automatically.

Execute the following setting after machine is ready.

- Developer bias adjustment (maintenance mode U140): AC Calib/Calibration
- ID correction operation setting (maintenance mode U464): Calib
- Adjusting the halftone automatically (maintenance mode U410)

(6)Fuser section

(6-1)Detaching and reattaching the fuser unit

1 Open the right cover (a) of the main unit (b).

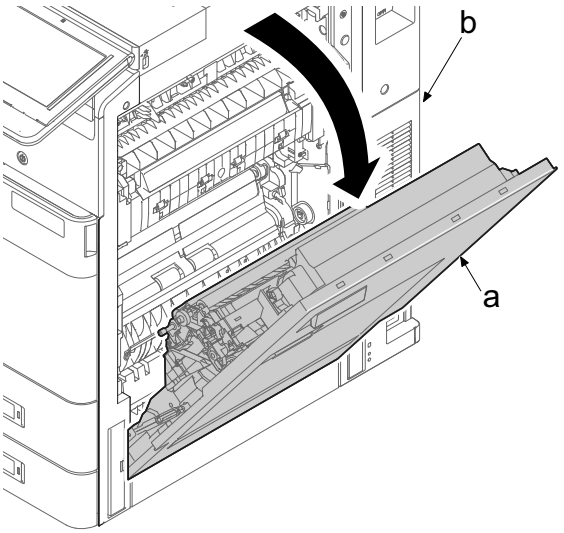

2 Release the hook (b) while pressing the left and right levers (a), detach the fuser unit (c) in the direction of the arrow.

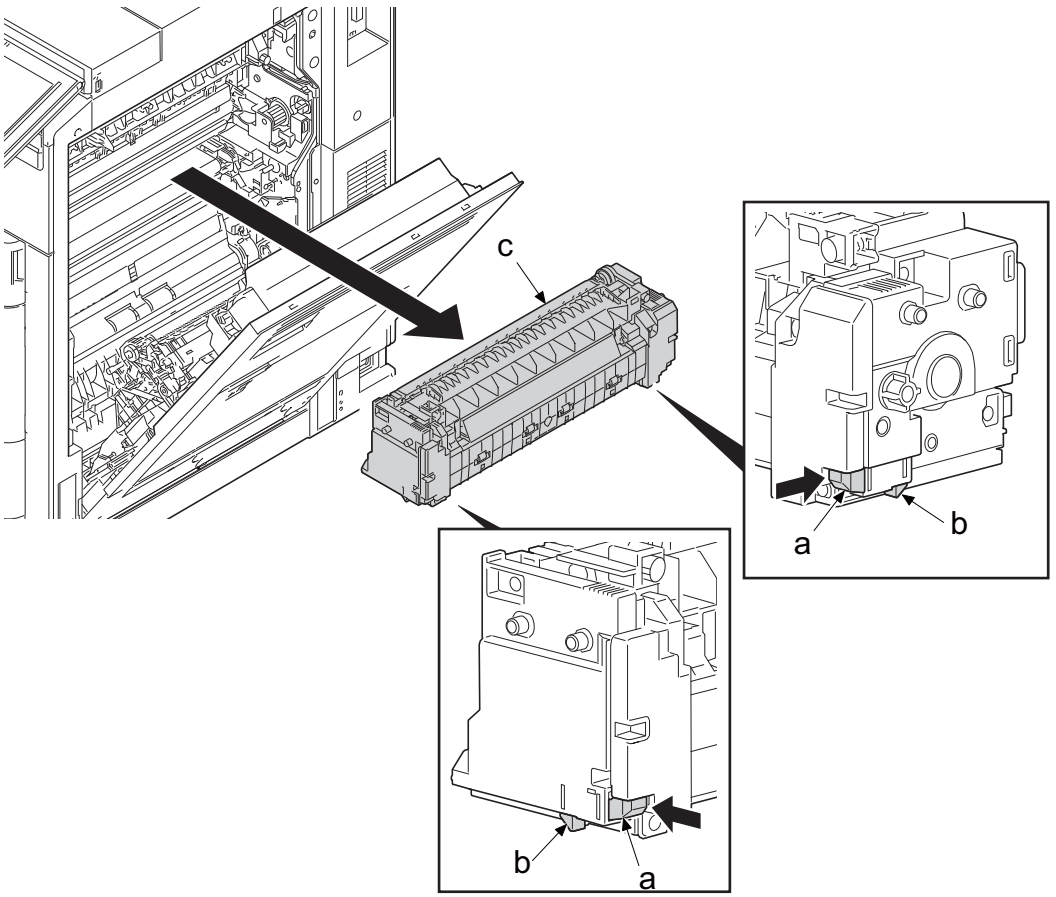

Notes for attaching

Align the pins (b) into the main unit rail (c) and push it until it is latched to the hook, when installing the fuser unit (a).

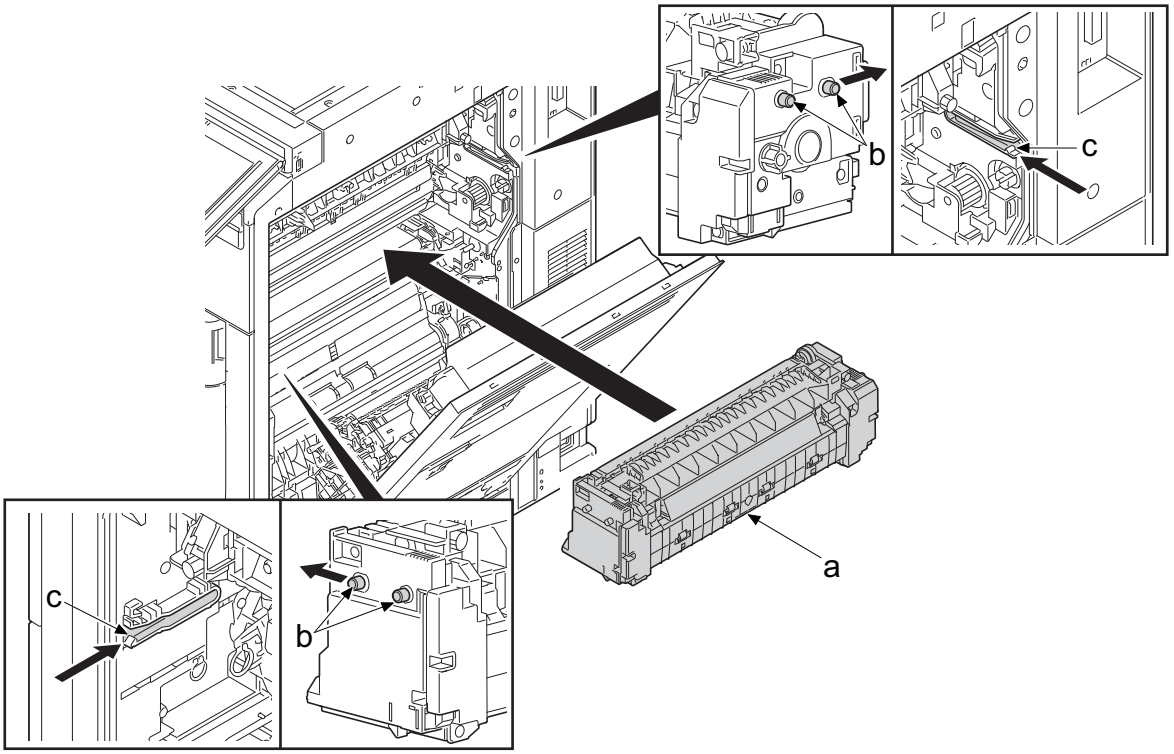

IMPORTANT

Insufficient lock will cause the phenomenon below when installing the fuser unit.

- Back side lock failure
  This causes drive failure at the rear side and comes up C6600 fuser belt rotation error.
- Front side lock failure
  This causes the image squareness failure due to skew feed.

(6-2)Hight adjustment of fuser unit (Trail edge skew image adjustment)

1 Compare image length of front and rear side.

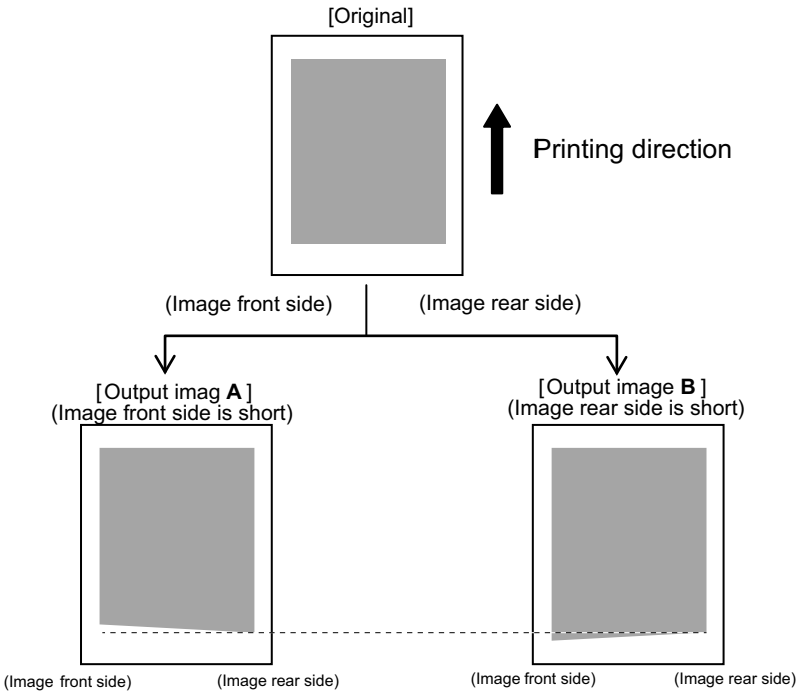

2 Open the right cover (a) of the main unit (b).

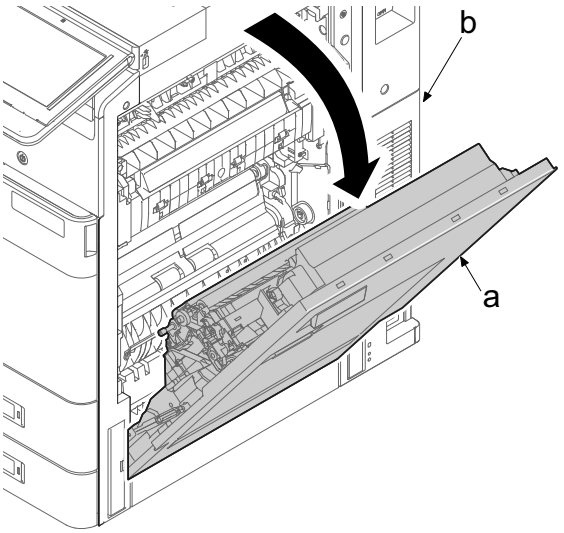

3 Release the hook (b) while pressing the left and right levers (a), detach the fuser unit (c) in the direction of the arrow.

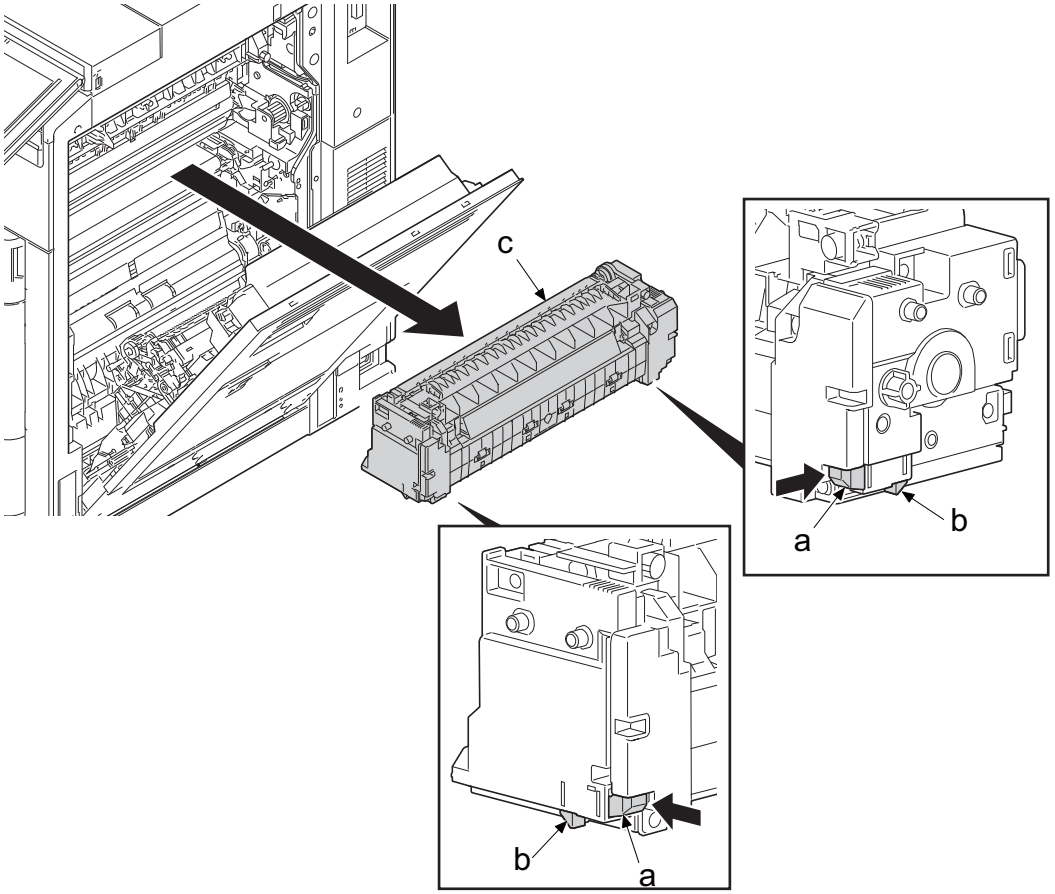

4 Loosen 2 screws (f) for fixing the fuser positioning guide (g) on inner frame of the front side.

5 Lift up the fuser positioning guide (g) and move the fuser hight adjust lever (h) to either right or left.

Estimate amount of movement

- In case of front side short (Chart A): Move the fuser hight adjust lever (h) to the right side of main unit and make the fuser positioning guide 1 pitch down. This makes front side about 0.4 mm shorter.
- In case of front side long (Chart B): Move the fuser hight adjust lever (h) to the left side of main unit and make the fuser positioning guide 1 pitch up. This makes front side about 0.5 mm longer.

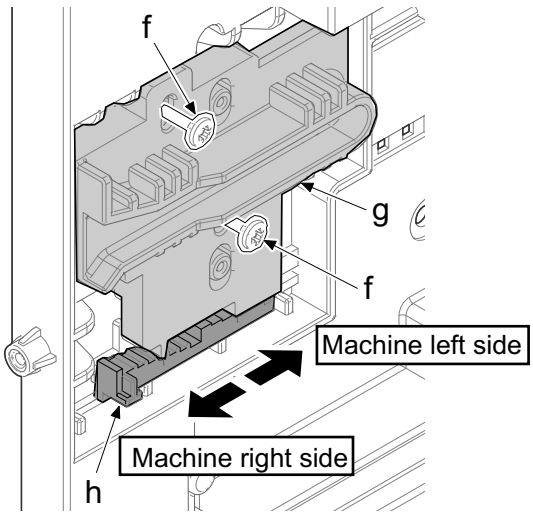

(Inner front frame viewed from the machine rear side)

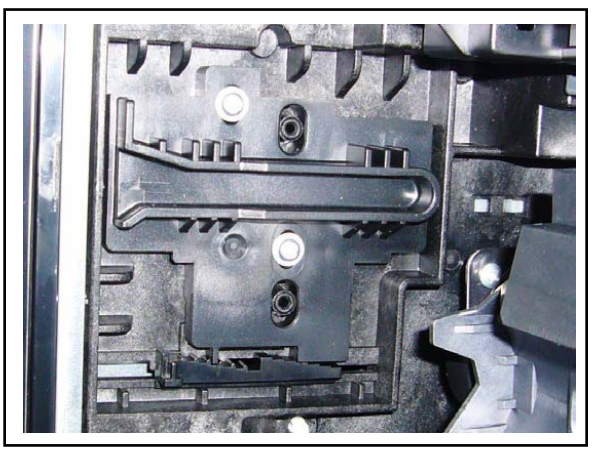

6 After adjustment, keep down fuser positioning guide (g) along with fuser hight adjust lever and secure 2 screws.

(7)Others

(7-1)Detaching and attaching filters.

Upper rear filter

1 Push lever (a) and remove upper rear filter cover (b) and filter (c).

2 Check the upper rear filter (c) and clean or replace it.

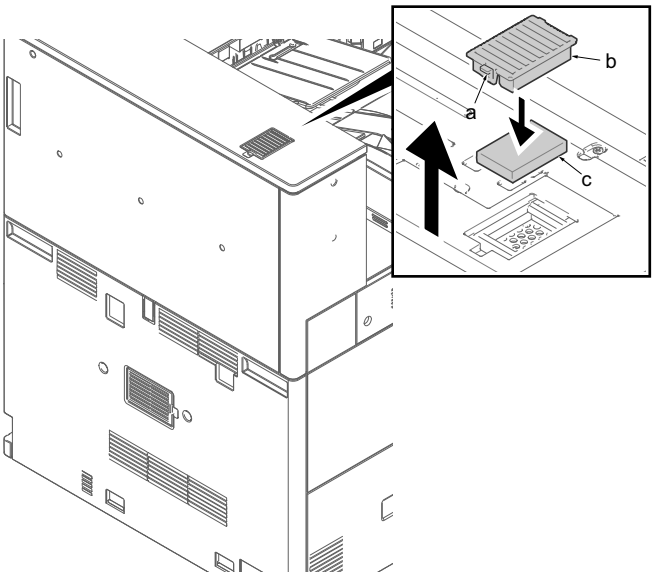

4 - 4 Maintenance parts replacement procedures (Enhancement)

(1)Paper feeder (PF-7140)

(1-1)Detaching and attaching PF retard roller, PF pickup pulley and paper feed roller

1 Pull out the upper cassette (a) from the paper feeder (c) and remove it in the direction of the arrow.

2 Pull out the lower cassette (b) from the paper feeder (c) and remove it in the direction of the arrow.

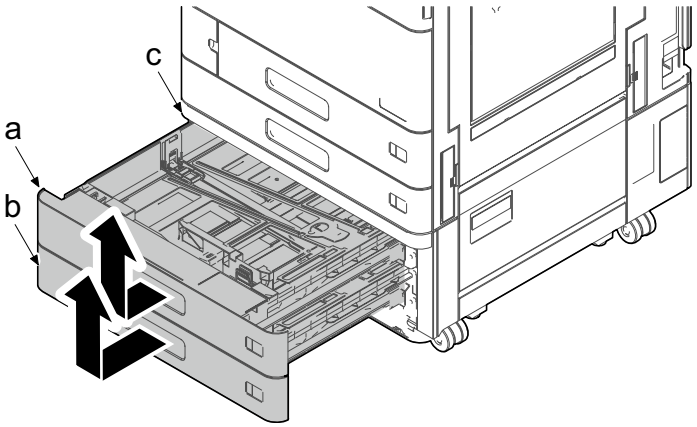

3 Open the front cover (a).

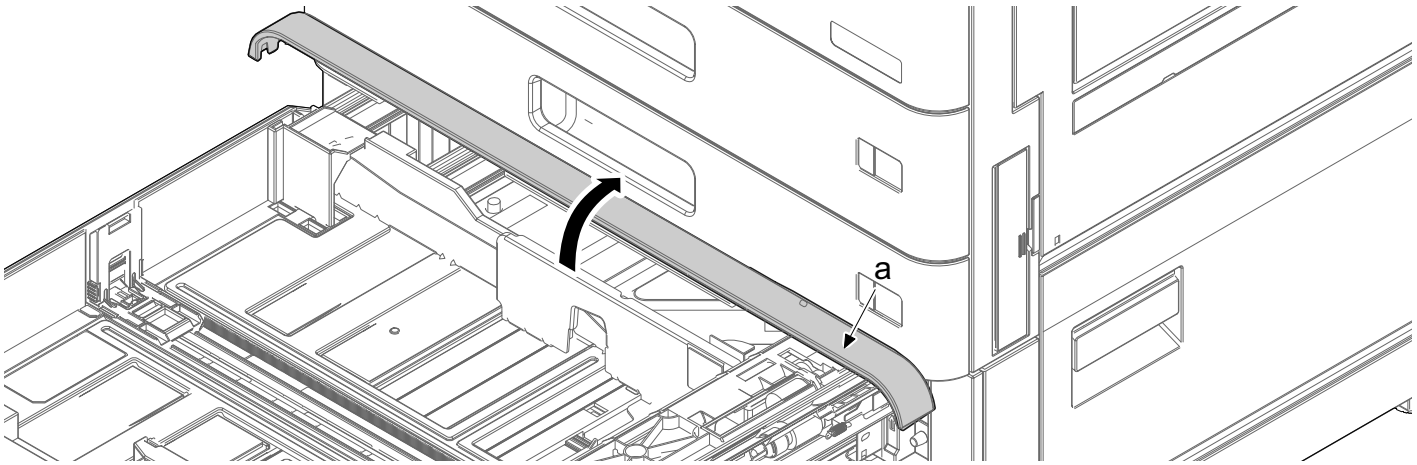

4 Pinch the lock lever (a) and pull the primary paper feed unit (c) from the upper stage of the paper feeder (b).

5 Pinch the lock lever (d) and pull the primary paper feed unit (e) from the lower stage of the paper feeder (b).

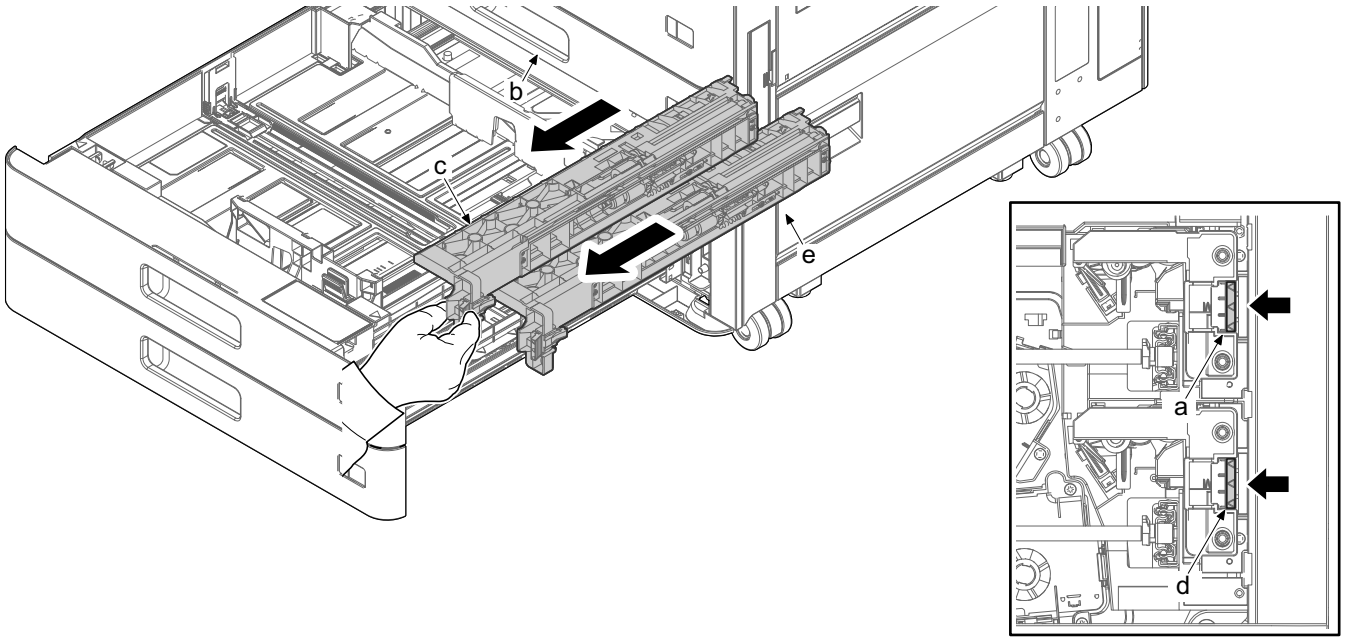

6 Release hooks (a), and remove retard pulley (b) from the bushing (c).

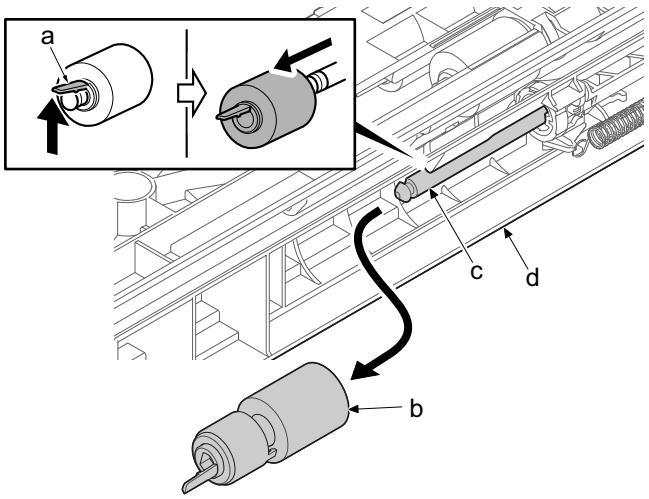

7 Turn over the primary paper feed unit (a).

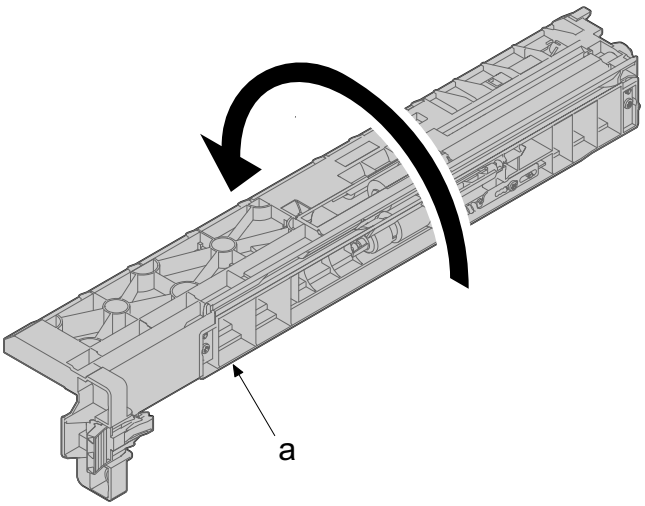

8 Slide the feed cover (b) from the primary feed unit (a).

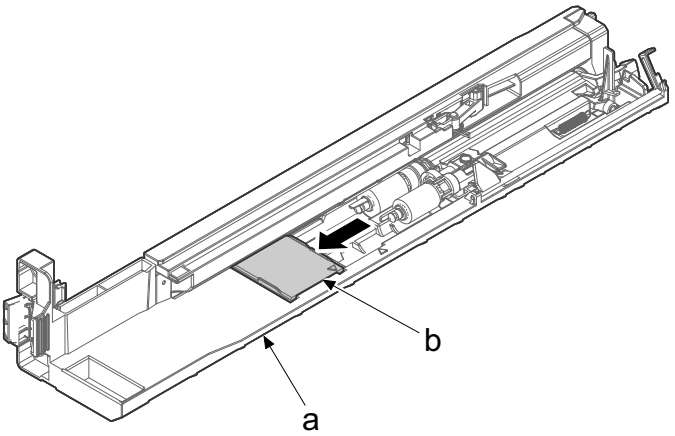

9 Release the hooks (a), and remove pickup pulley (b) and paper feed roller (c) from the bushing.

- Take pickup pulley (b) away lifting up it slightly.

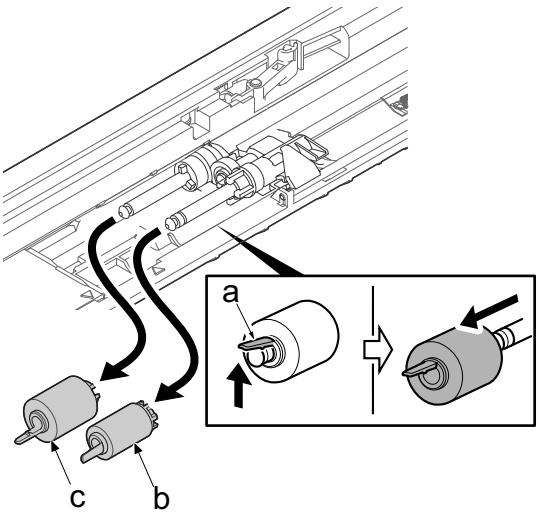

10 Attach the new paper feed roller.

11 Attach the new pickup pulley.

12 After replacing with the new pickup roller and feed roller, reattach the feed cover (a) to the position where it is aligned to the triangle mark (b).

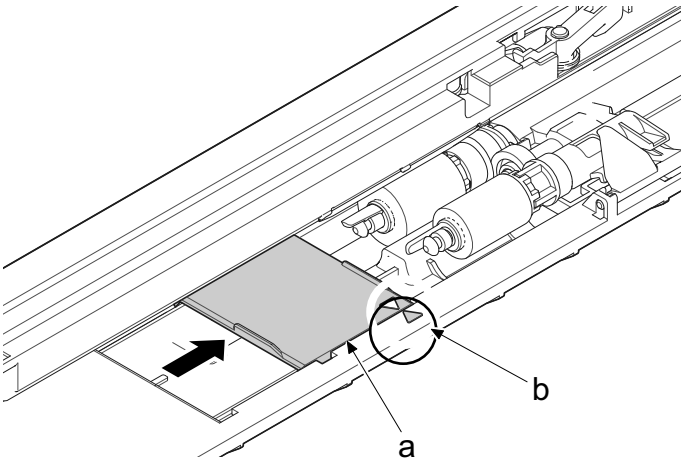

13 Turn over the primary paper feed unit.

14 Attach the new retard pulley.

IMPORTANT

When replacing the new paper feed roller, pickup pulley or retard pulley, take care not to touch the roller surface.

Notes for attaching

When installing the primary paper feed unit (a), align the protrusion (b) at the lower part of the primary feed unit to the guide (c) and align the protrusion (d) at the upper part of the primary feed unit to the guide (e) of the main unit.

Reinstall the primary paper feed unit in case that [Cassette xx error] comes up.

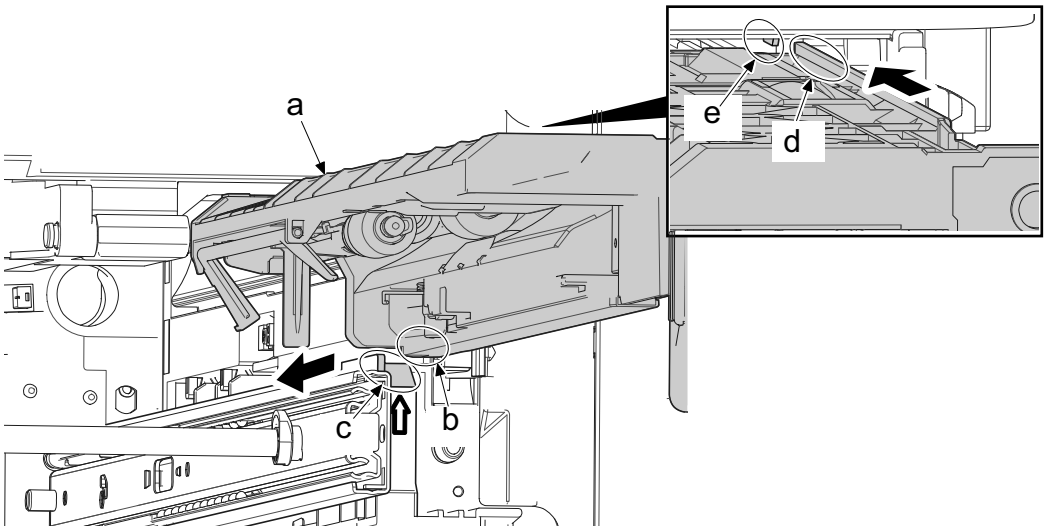

(2)Large capacity feeder (PF-7150)

(2-1)Detaching and attaching PF retard roller, PF pickup pulley and paper feed roller

1 Pull out the lower cassette (a) from the feeder unit (b) and remove it in the direction of the arrow.

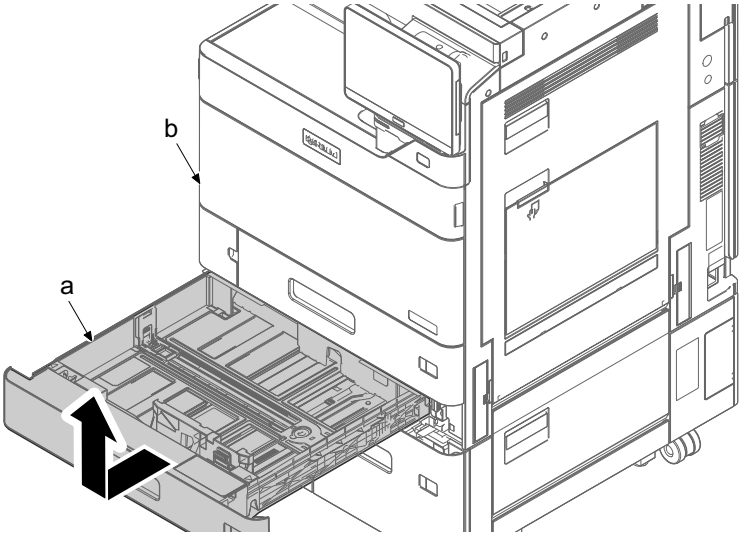

2 Remove the screw (a) (M3x8).

3 Slide the stopper (b) in the direction of the arrow and detach it.

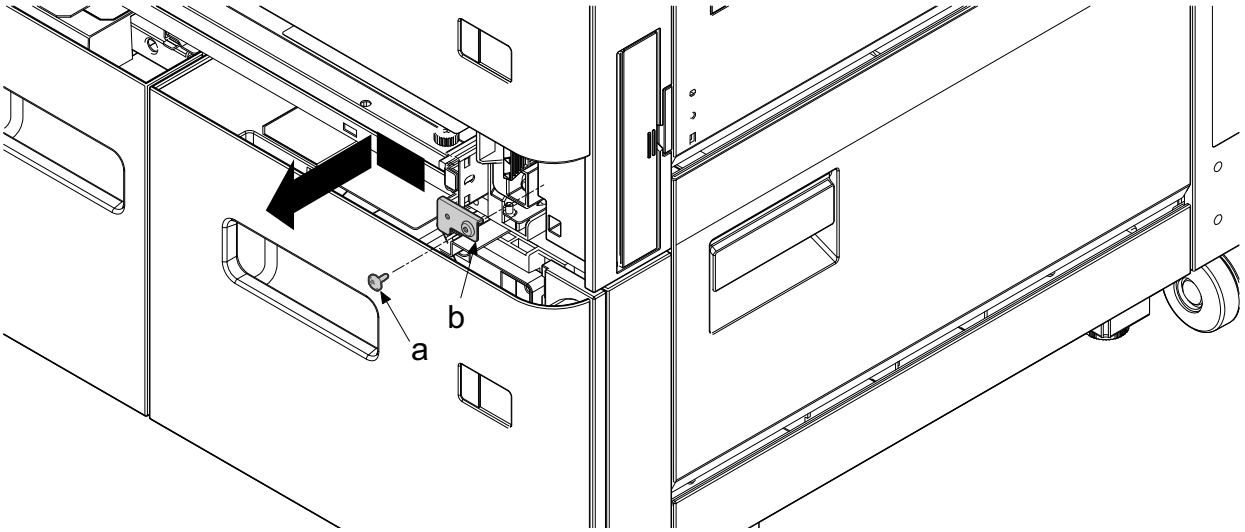

4 Pull out the left cassette (a) from the paper feeder (b).

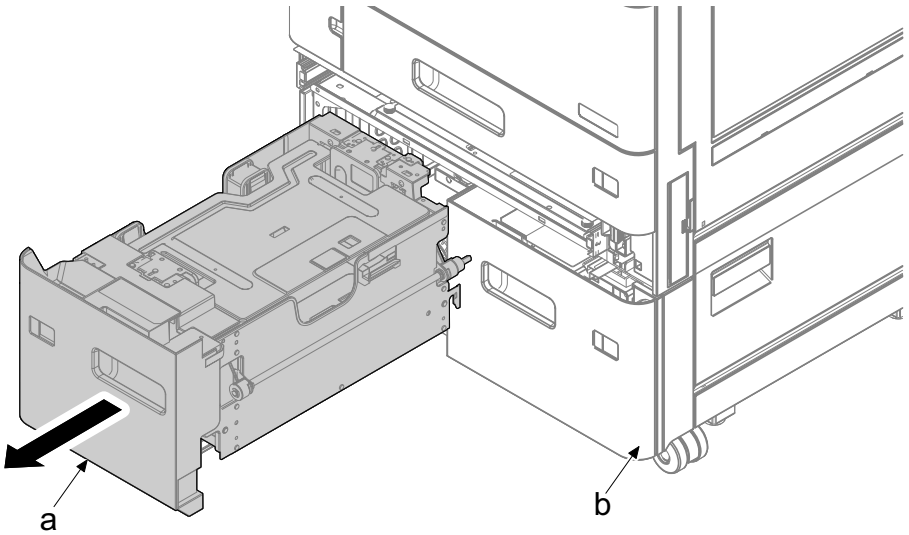

5 Push both slider lock levers (b) to release lock and pull the left cassette (a) furthermore. (50 to 70 mm)

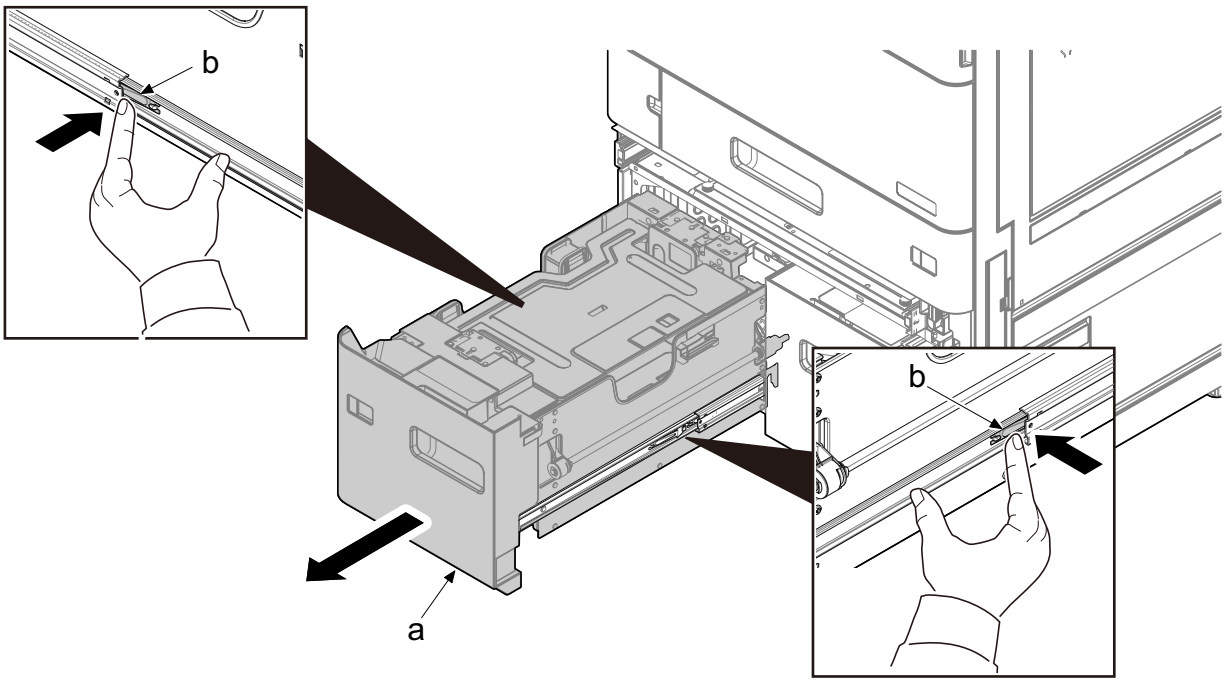

6 Pull out the right cassette (a) from the paper feeder (b).

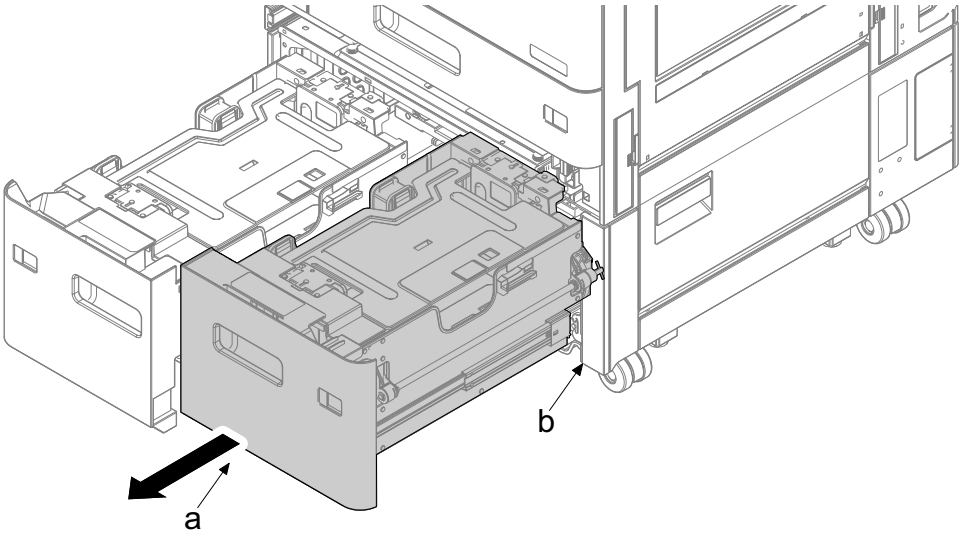

7 Hold the handle (a) and pull out the PF conveying unit in the direction of the arrow.

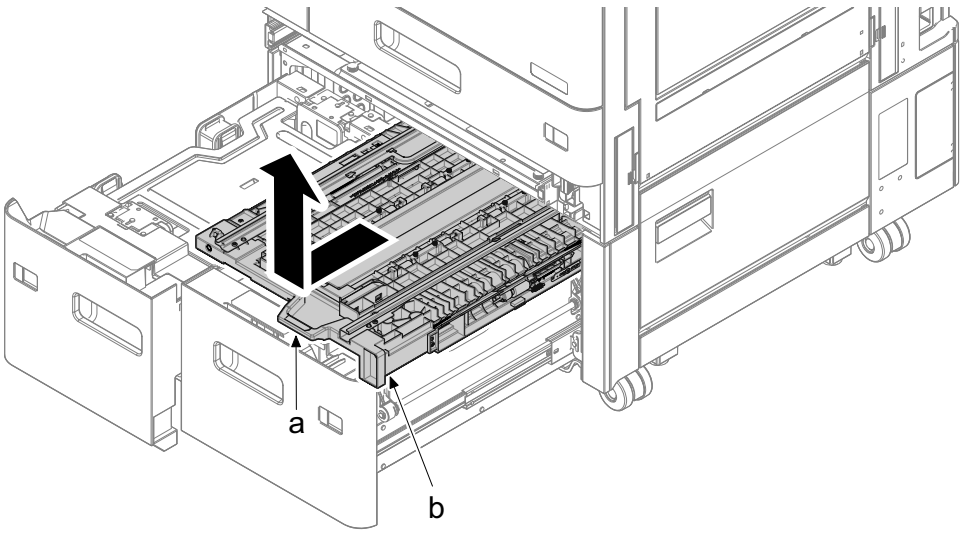

Notes for attaching

Make sure to pull out the left cassette (d) when attaching the PF conveying unit (a).

Align the PF conveying unit rail (b) into the PF main unit side guide (c) then install.

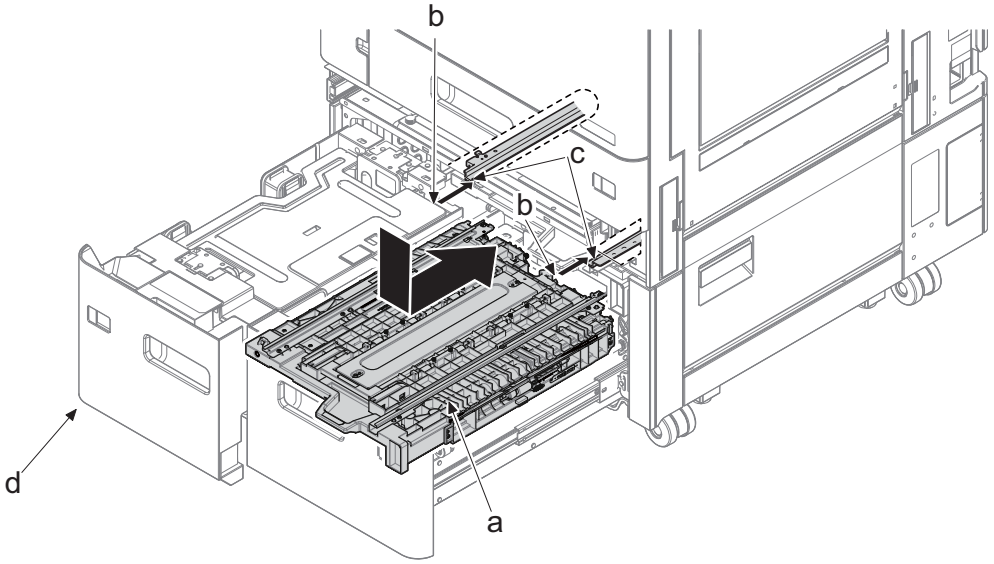

8 Turn over the PF conveying unit (a).

9 Release hooks (b), and remove retard pulley (c) from the bushing (d).

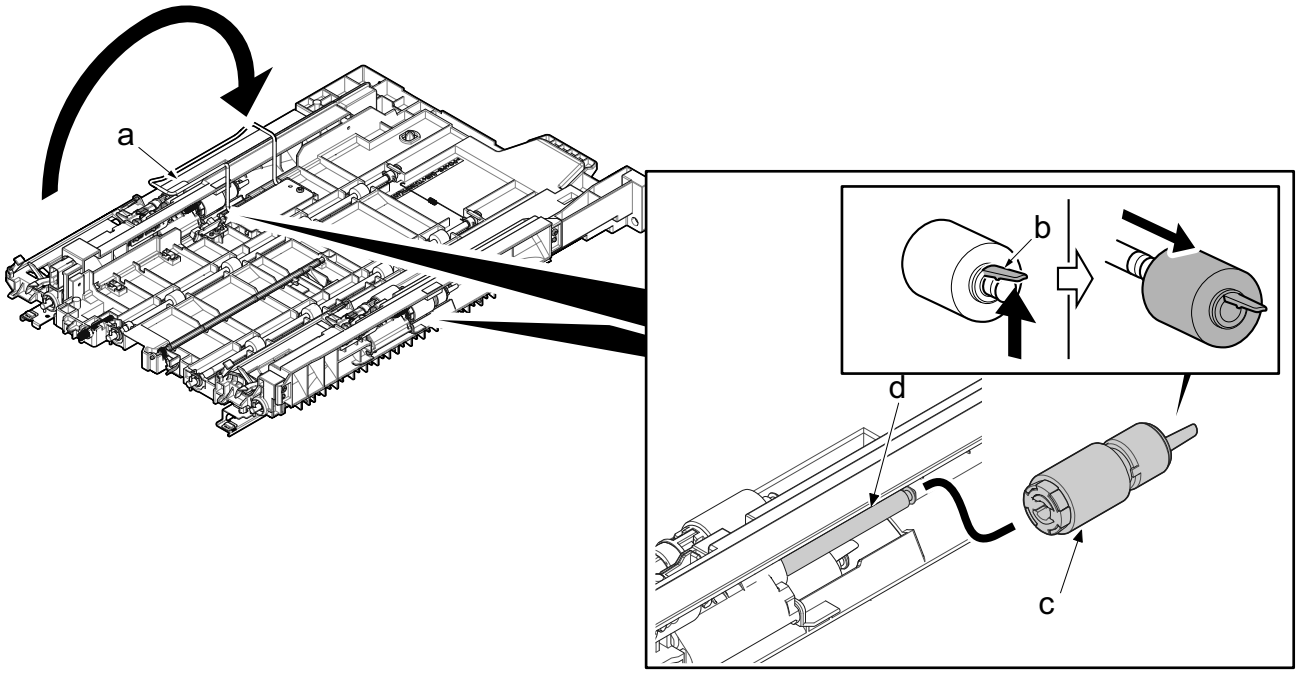

10 Release hooks (b), and remove pickup pulley (c) and paper feed roller (d) from the bushing.

11 Attach the new paper feed roller.

12 Attach the new pickup pulley.

13 Turn over the PF conveying unit.

14 Attach the new retard pulley.

15 Reattach the parts in the original position.

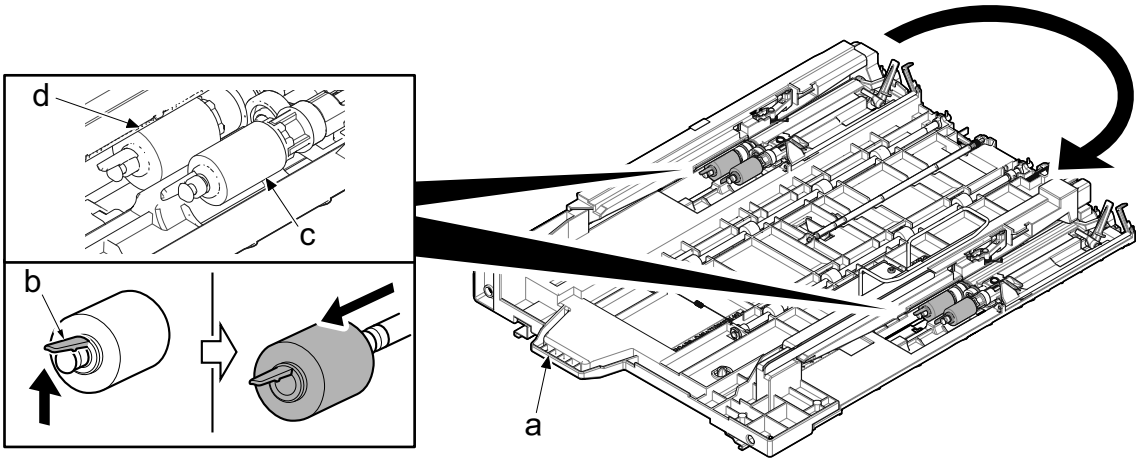

IMPORTANT

When replacing the new paper feed roller, pickup pulley or retard pulley, take care not to touch the roller surface.

(3)Side Deck (PF-7120)

(3-1)Detaching and attaching the pickup pulley and paper feed roller

1 Pull out the cassette.

2 Remove the screw (a) (M3x8) and detach the wire cover (b).

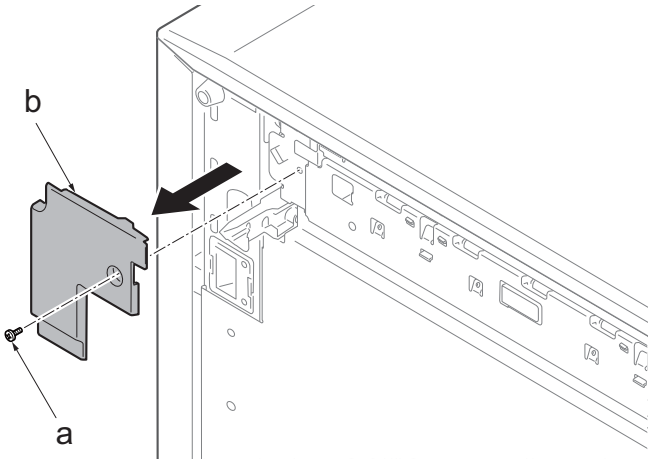

3 Disconnect the connector (b) of the main unit (a).

4 Release the wire (d) from the clamp (c).

5 Remove one screw (e) (M3×8).

6 Slide the PF feed unit (f) frontward and remove it while rotating it by using the positioning shaft (g) as fulcrum.

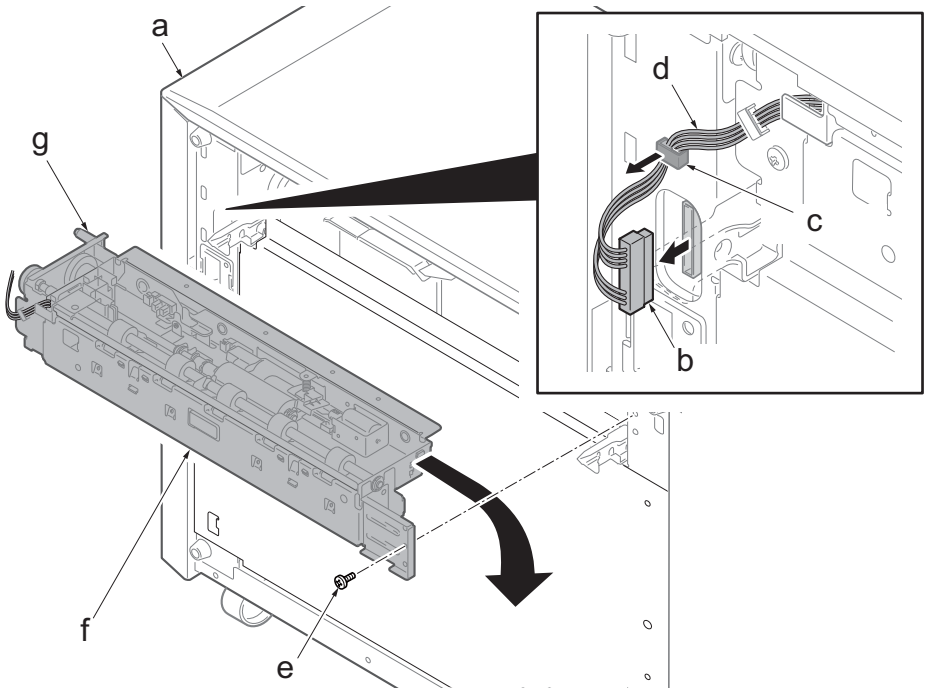

7 Remove two stop rings A (b) from the PF paper feed shaft (a).

8 Remove two stop rings B (c) and slide the joint (d).

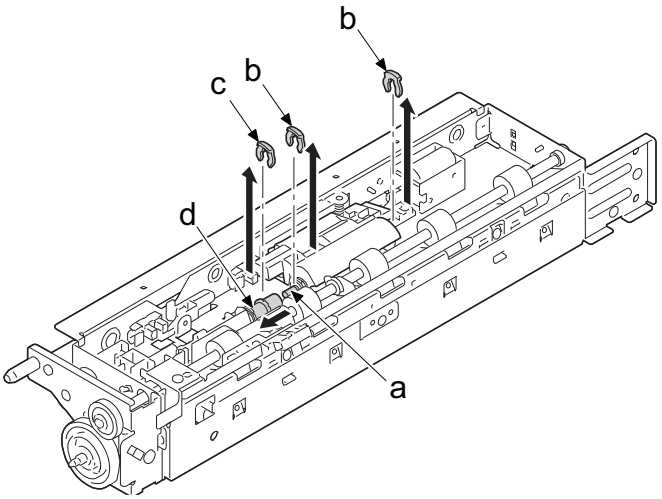

9 Slide two bushings (b) at the both sides of the feed roller holder (a).

10 Remove the feed roller holder (a) and spring (d) upward from the PF feed unit (c).

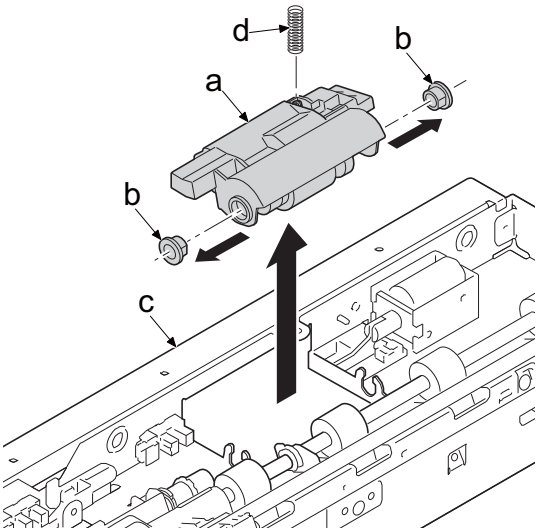

(3-2)Detaching and attaching the PF retard roller

1 Detach the PF paper feed unit (a).

2 Turn over the PF paper feed unit (a).

3 Remove stop ring (c) from the PF retard roller shaft (b).

4 Pull out the spacer (d) from PF retard roller shaft and remove it.

- Take care not to fall the set pin, when removing the spacer.

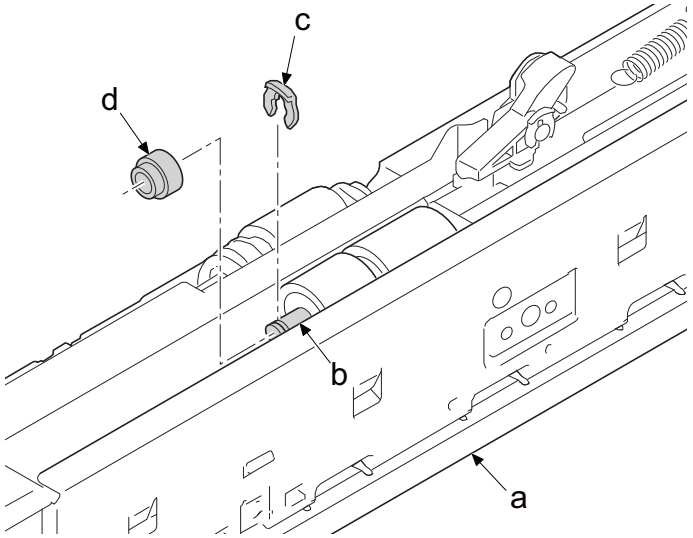

5 Pull out the set pin (b) of torque limiter (a).

6 Pull out the torque limiter (a) and PF retard roller (d) while pushing retard release lever (c), and remove it.

7 Clean or replace the PF retard roller.

8 Attach the PF retard roller back again to the PF feed unit.

9 Reattach the PF paper feed unit in the original position.

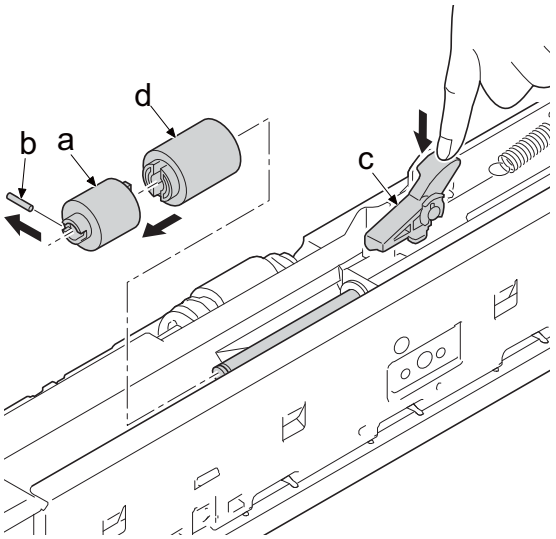

IMPORTANT

When replacing the new paper feed roller, pickup pulley or retard pulley, take care not to touch the roller surface.

(4)Document processor (DP-7150)

(4-1)Detaching and attaching the DP pickup pulley and DP paper feed roller

1 Open the DP upper cover (a).

2 Pull the release lever (b) and open the fixing cover (c).

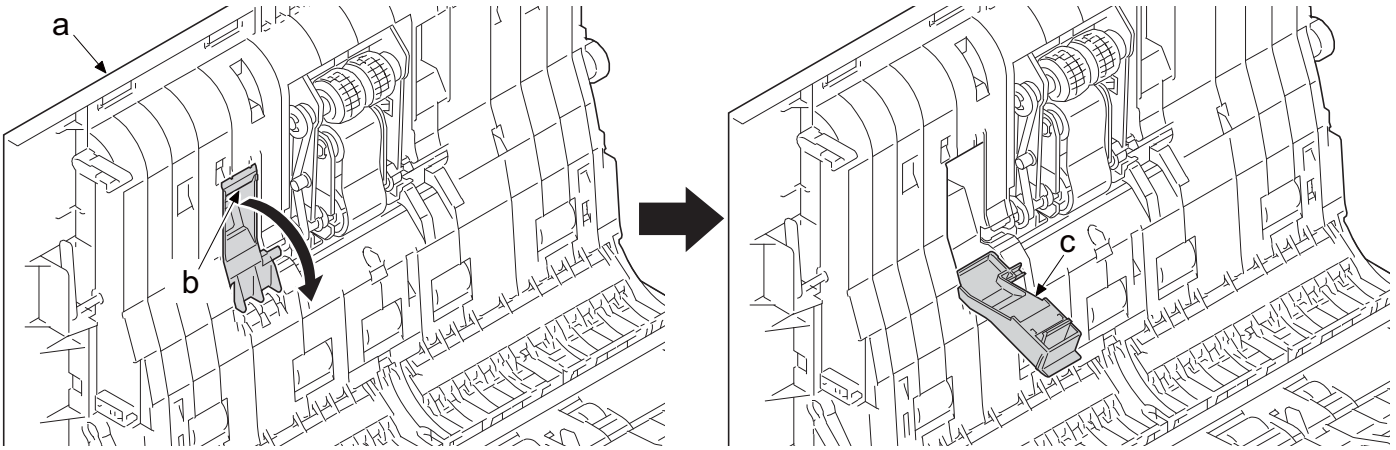

3 Rotating DP paper feed unit (a) and pull out it in the direction of the arrow.

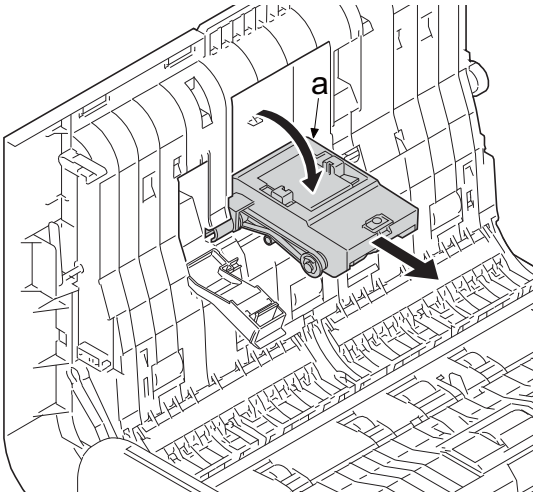

(4-2)Detaching and attaching the DP retard roller

1 Open the DP upper cover (a).

2 Remove hooks (b) and remove the DP retard roller cover (c).Open the DP upper cover (a).

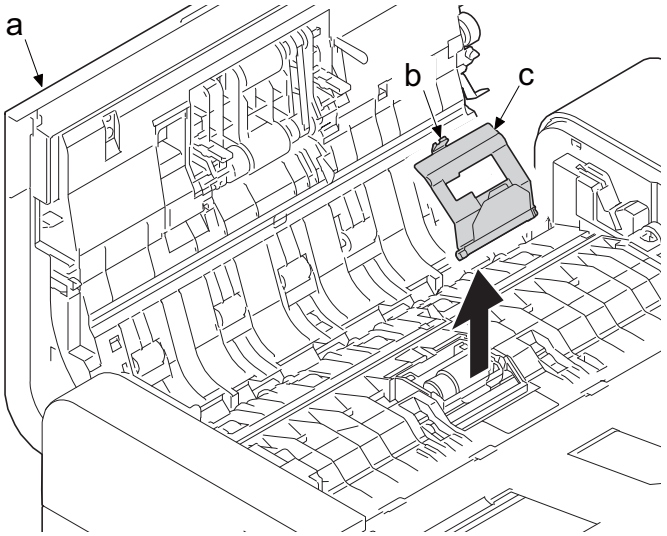

3 Remove the stop ring (a), and remove the DP retard roller (b) and the torque limiter (c).

4 Check or replace the DP retard roller, and then reattach the parts in the original position.

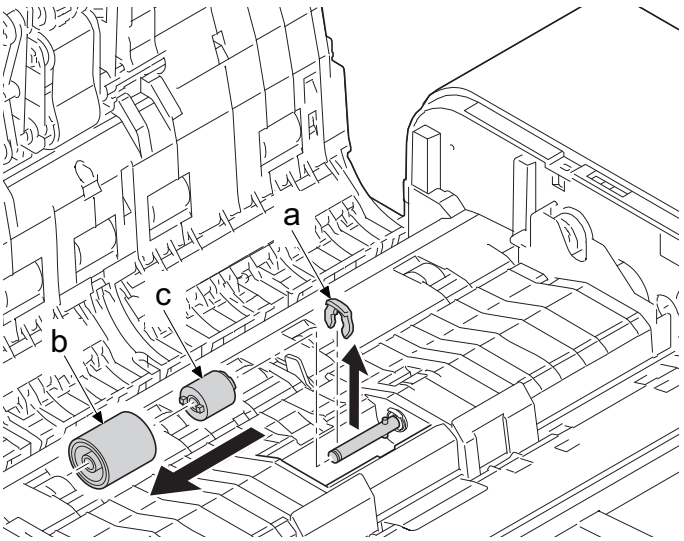

(5)Document processor (DP-7160)

(5-1)Detaching and attaching the DP pickup pulley and DP paper feed roller

1 Open the DP upper cover (a).

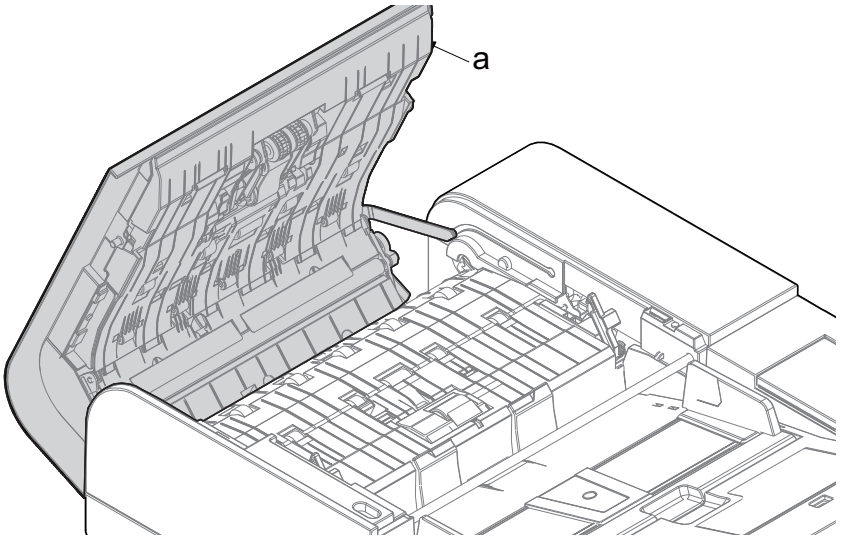

2 Pull the release lever (a) and open the fixing cover (b).

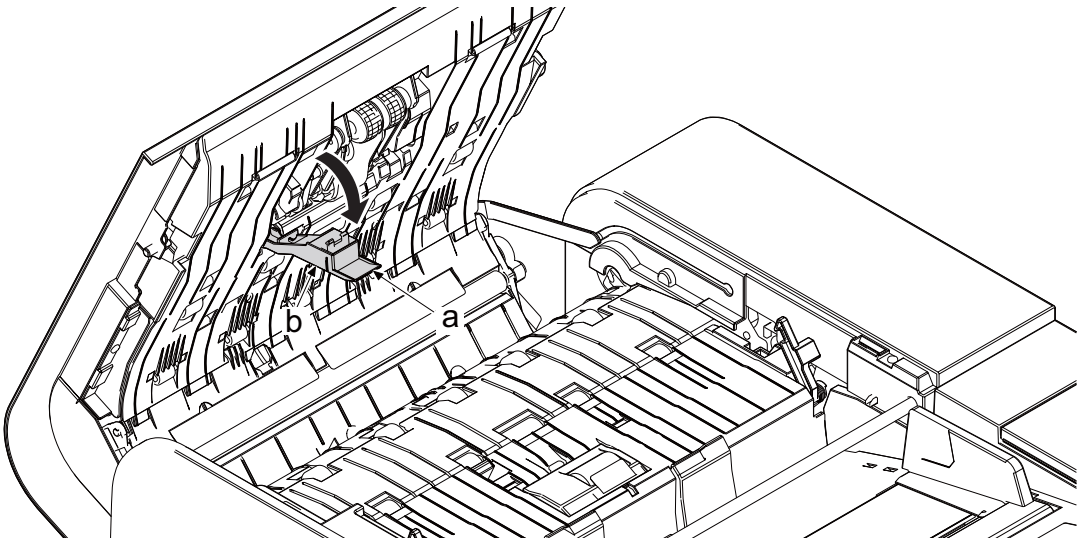

3 Rotating DP paper feed unit (a) and pull out it in the direction of the arrow.

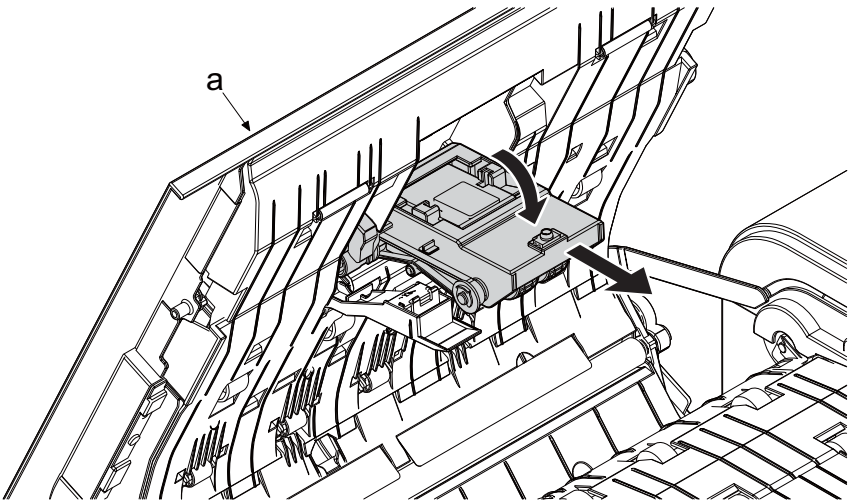

(5-2)Detaching and attaching the DP retard roller

1 Open the DP top cover.

2 Detach the DP paper feed guide and the DP feed unit.

3 Remove hooks (b) and remove the DP retard roller cover (c).

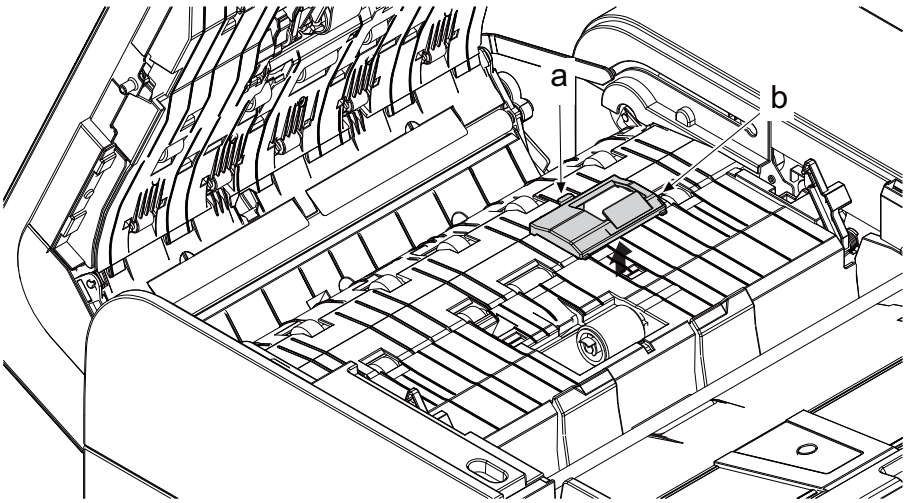

4 Remove the stop ring (a), and remove the DP retard roller (b) and the torque limiter (c).

5 Attach the new retard pulley.

6 Reattach the parts in the original position.

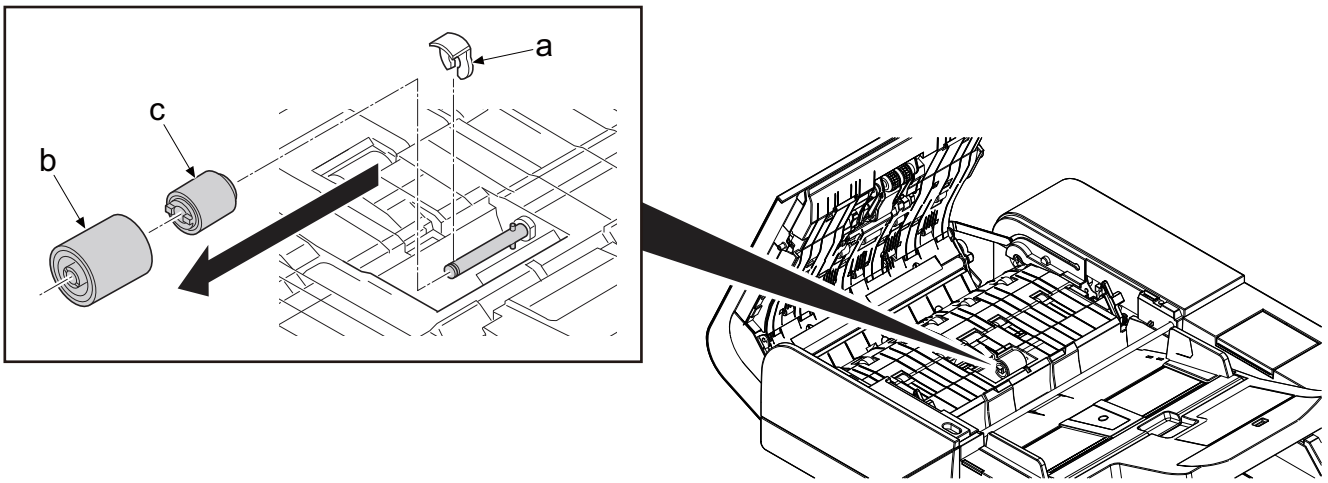

4 - 5 Adjustment procedures after replacing the maintenance kit

After Maintenance Kit replacement, close the cover then turn on machine.

Auto developer aging correction and drum refresh start automatically.

- Execute the following setting after machine is ready.

Execute U952 maintenance mode work flow with preset. (See page 6-346)

1 Input “10871087” using numeric keys to start maintenance mode.

2 Input "469" using the numeric keys and press [Start] key.

3 Select [Execute].

4 Select Maintenance kit for setting.

5 Select maintenance modes listed on the display from top to bottom and press [Start] key to return to maintenance mode.

6 Run following maintenance modes after back to maintenance mode.

7 Press [Stop] key to get back to flow after finish each modes.

8 Repeat step 5 to 7 and complete the flow.

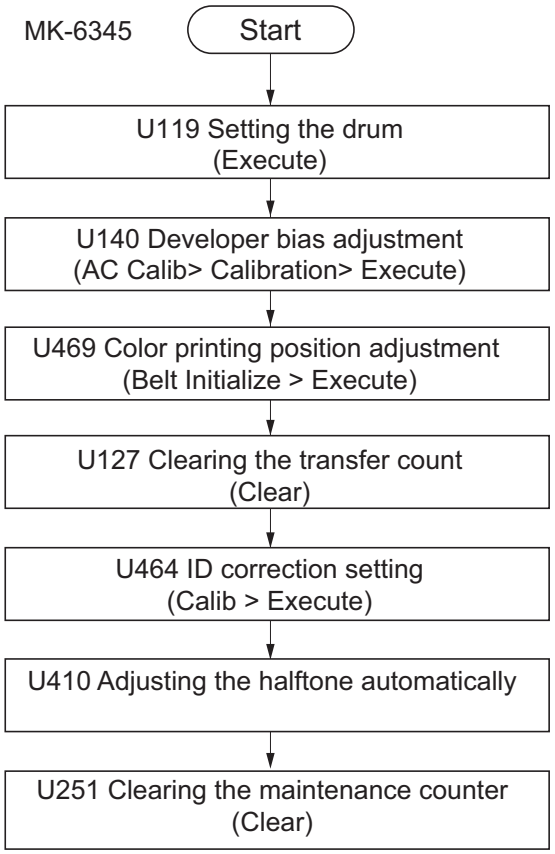

4 - 6 Disassembly and assembly procedures

(1)OUTER COVERS

(1-1)Detaching and attaching the front cover

1 Open the front cover (a) slightly.

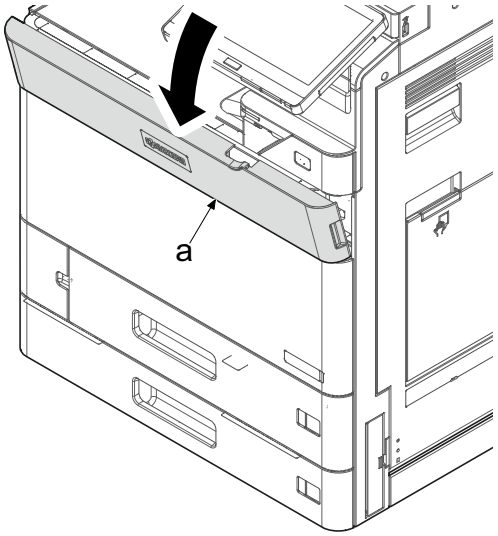

2 Open the front cover (a) and then open the front cover for maintenance (b) while grasping the upper left and right part.

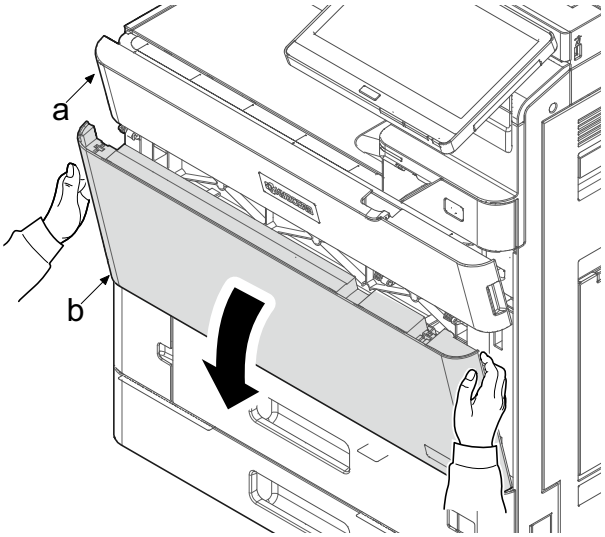

3 Close the front cover (a).

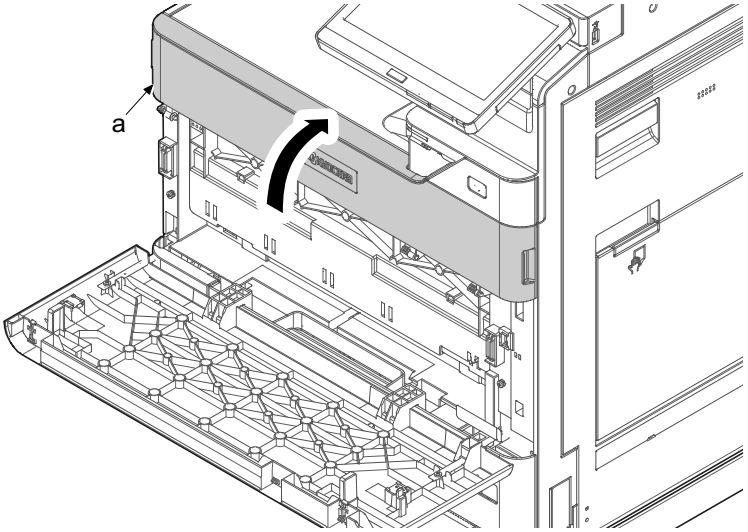

4 Remove the stopper (b) of the front cover (a).

5 Slide the front cover in the direction of the arrow and remove the fulcrum (d) from the fulcrum shaft (c).

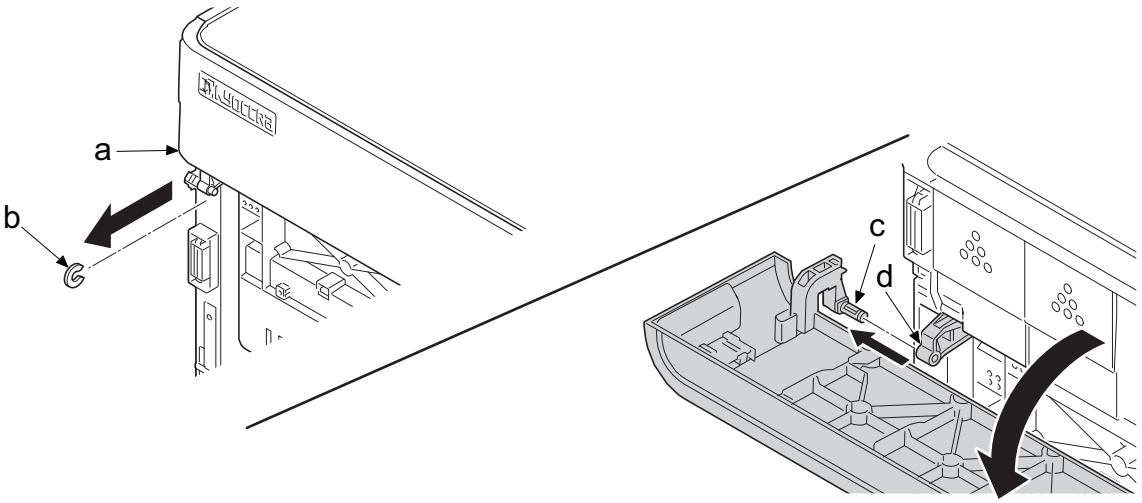

(1-2)Detaching and reattaching the front cover for maintenance

1 Pull out the upper cassette (a) from the main unit (b) and remove it in the direction of the arrow.

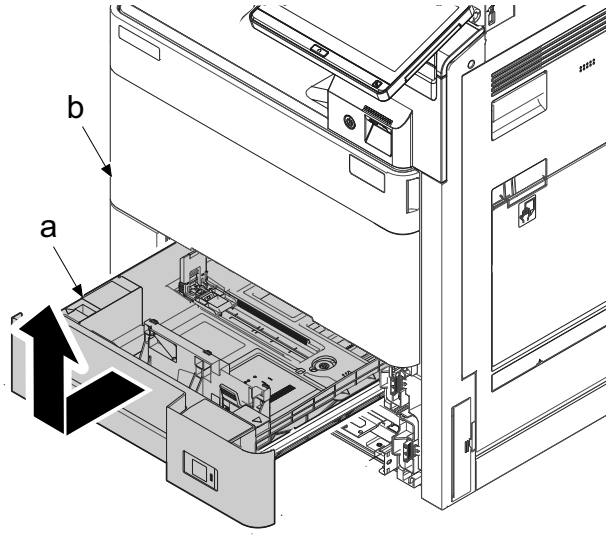

2 Remove the stop ring (b) from the fulcrum pin (a).

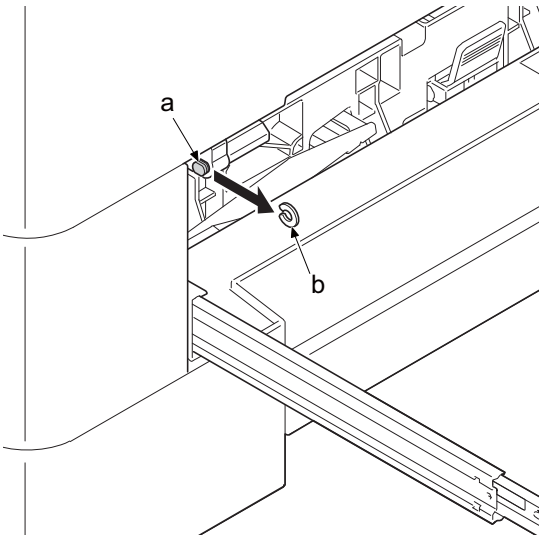

3 Open the front cover slightly.

4 Open the inner cover for maintenance.

5 Remove each one screw, remove the strap (c) from the front cover (a) and remove in the direction of the arrow.

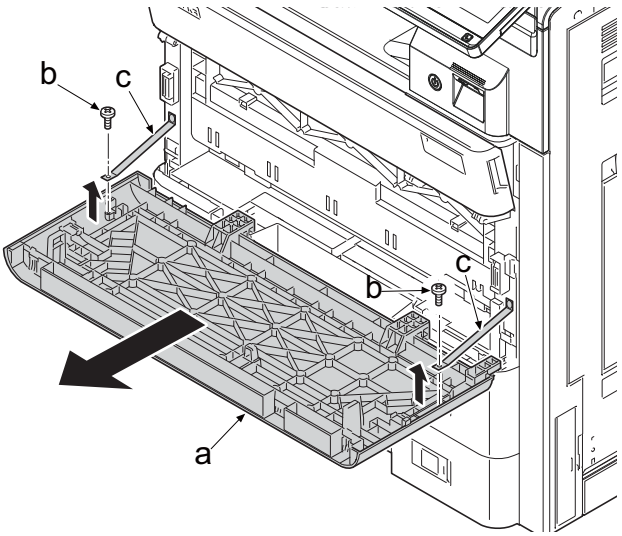

(1-3)Detaching and attaching the inner cover

1 Open the front cover (a) slightly.

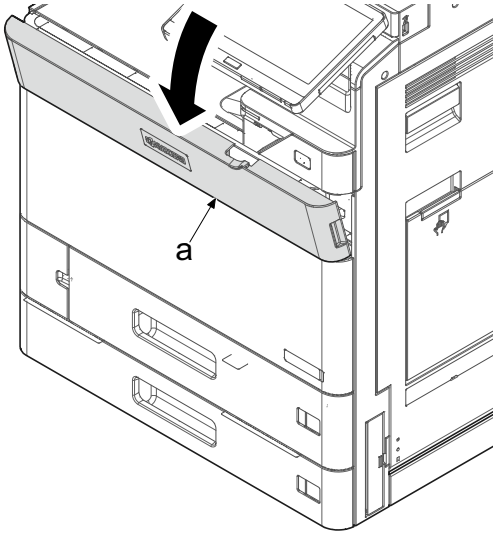

2 Open the front cover (a) and then open the front cover for maintenance (b) while grasping the upper left and right part.

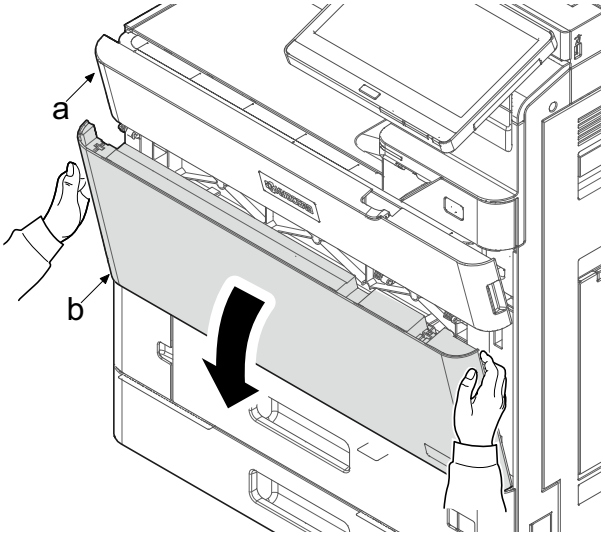

3 Release the 6 protrusions (b) and open the retainer sheet (a) towards the front side.

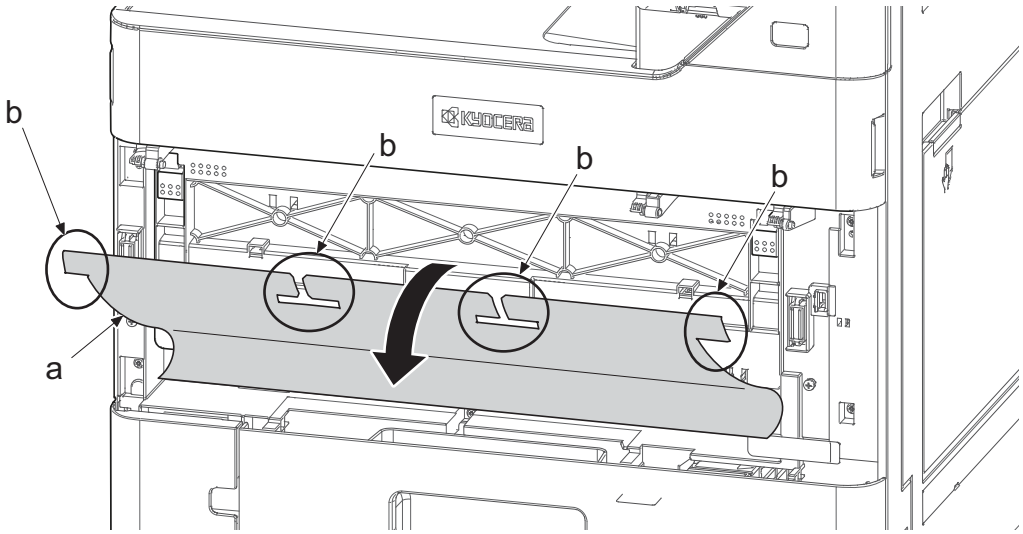

4 Open inner cover (a) pulling left and right lever (b) on the cover.

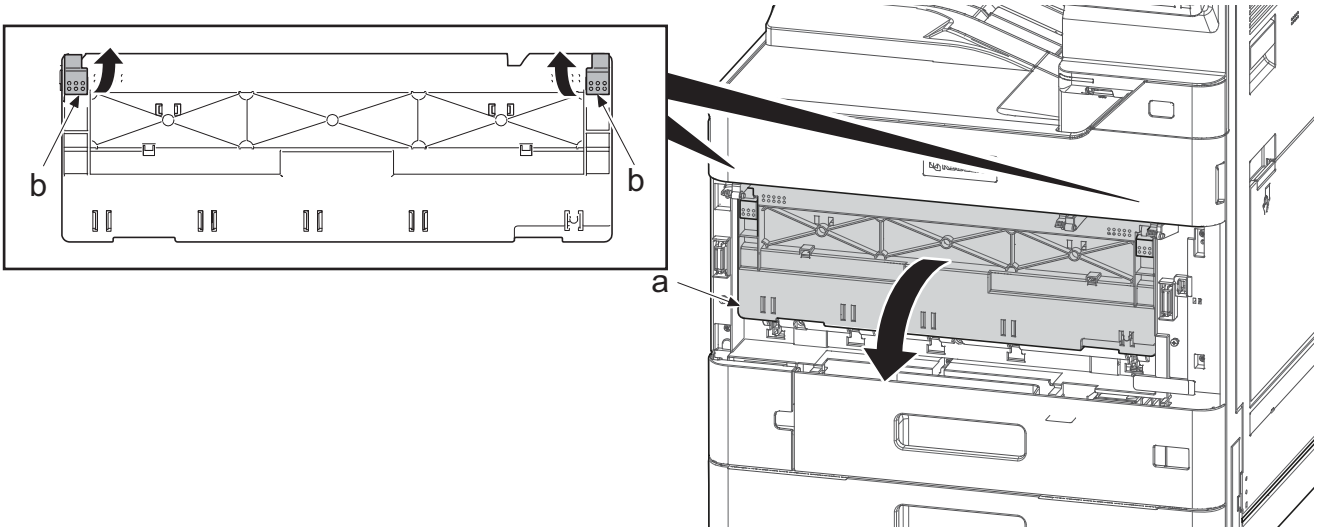

5 Release the hook (b) with a flat-blade screwdriver (a), remove the inner cover (c) in the direction of the arrow.

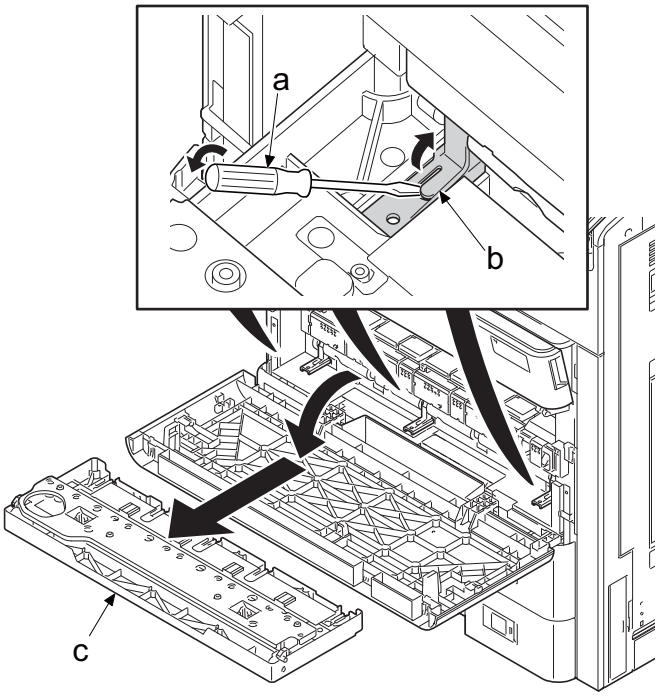

(1-4)Detaching and attaching the rear bottom cover

1 Remove a screw (a) (M3x10) and then remove the rear upper cover (b) by sliding in the direction of the arrow.

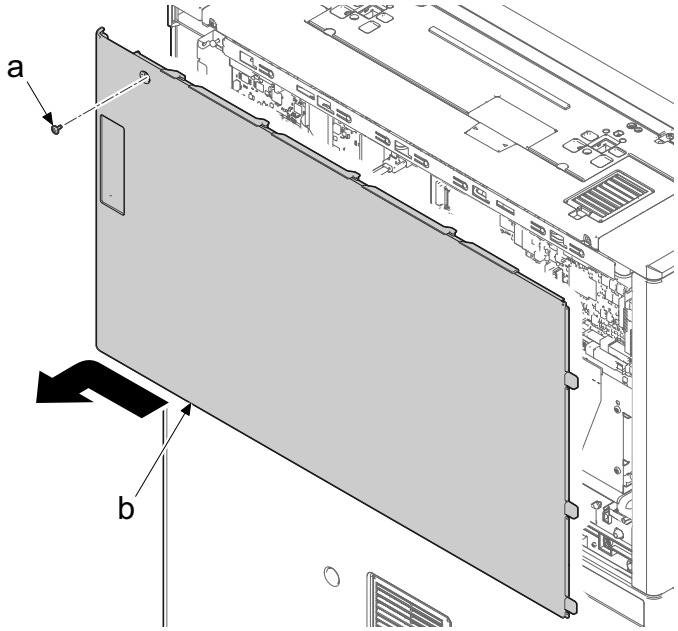

(1-5)Detaching and attaching the rear bottom cover

1 Remove two screws (a) (M3x8).

2 Push down the rear lower cover (b), release the upper rib, lift in slightly opened and release the lower hook (c). After that, detach it in the direction of the arrow.

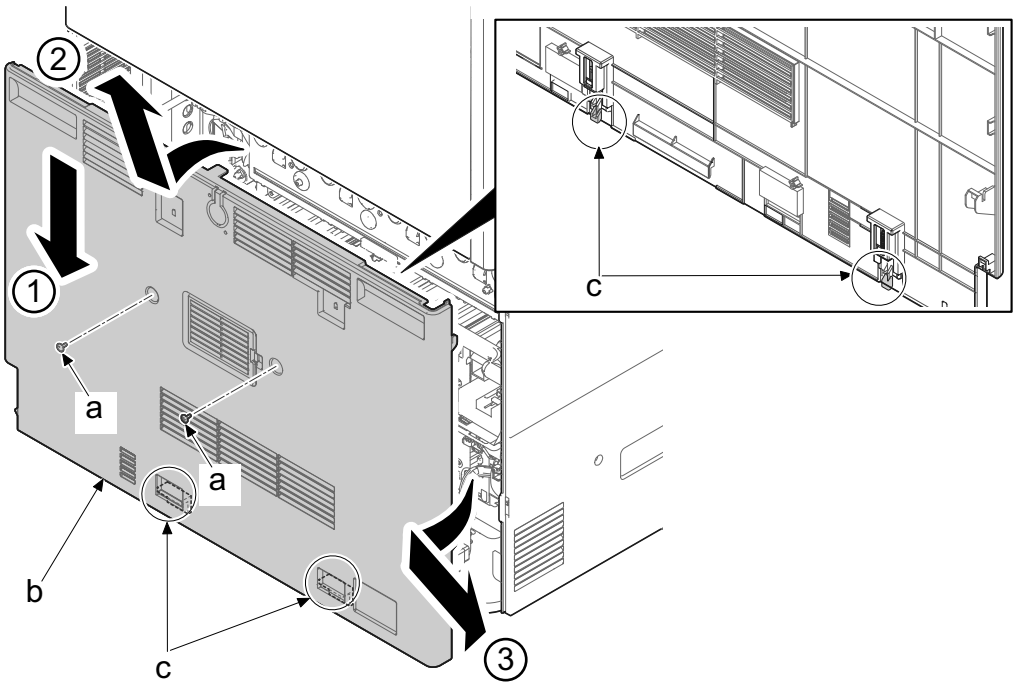

(1-6)Detaching and attaching the DP rear cover

1 If DP is installed, Open it.

2 Remove the rear top cover.

3 Remove two screw (a) (M3x8).

4 Remove the DP rear cover (b) in the direction of the arrow.

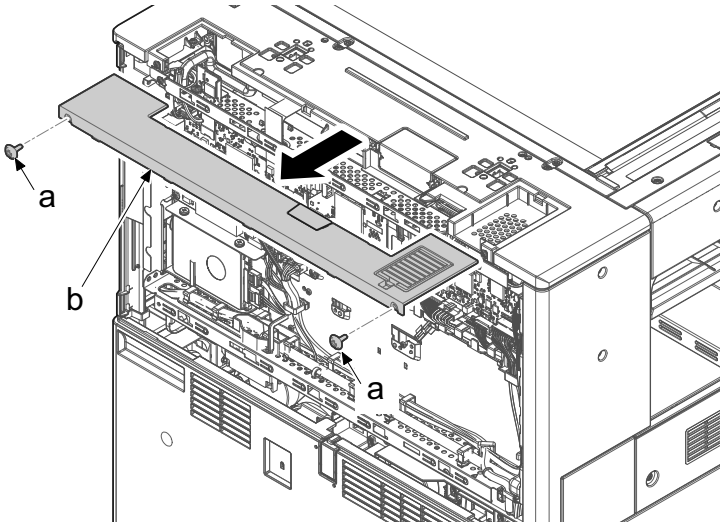

(1-7)Detaching and attaching the LSU rear cover

1 Remove the rear top cover.

2 Remove the rear top cover.

3 Remove two screw (a) (M3x8).

4 Detach the LSU rear cover (b) in the direction of the arrow.

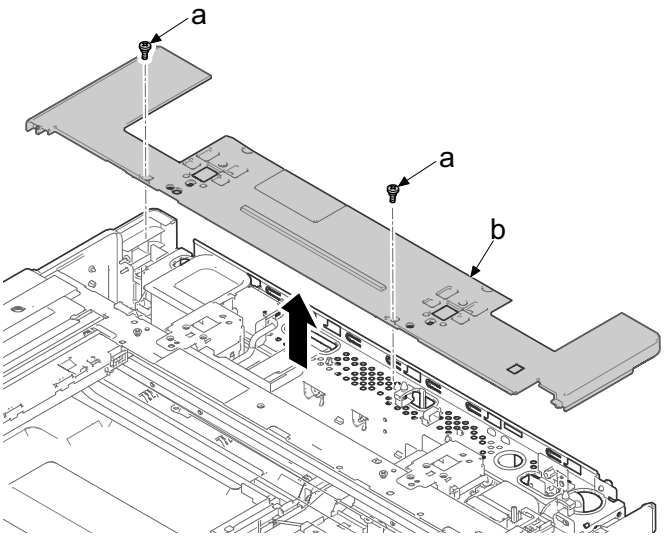

(1-8)Detaching and attaching the left top cover/the rear left cover.

1 Remove two screw (a) (M3x8).

2 Release two hooks (c) and remove the left rear cover (b) in the direction of the arrow.

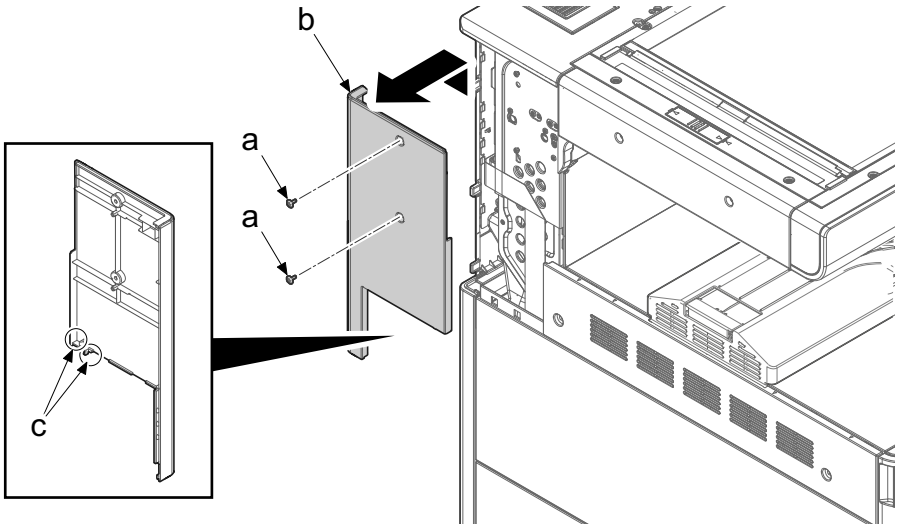

3 Open the front cover.

4 Remove two screws (a) (M4x10) from the left upper cover (c) and the screw (b) (M3x8) from the left lower cover.

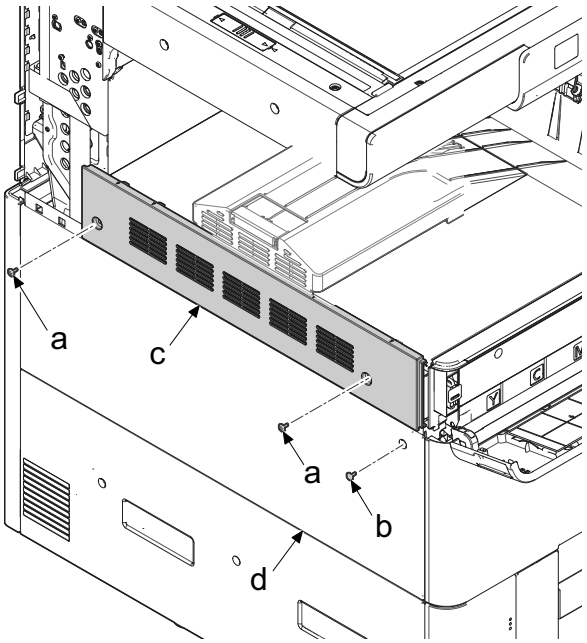

5 Release four hooks (b) in top of the left top cover while spread left lower cover (c) in the direction of the arrow, and remove the left top cover (a).

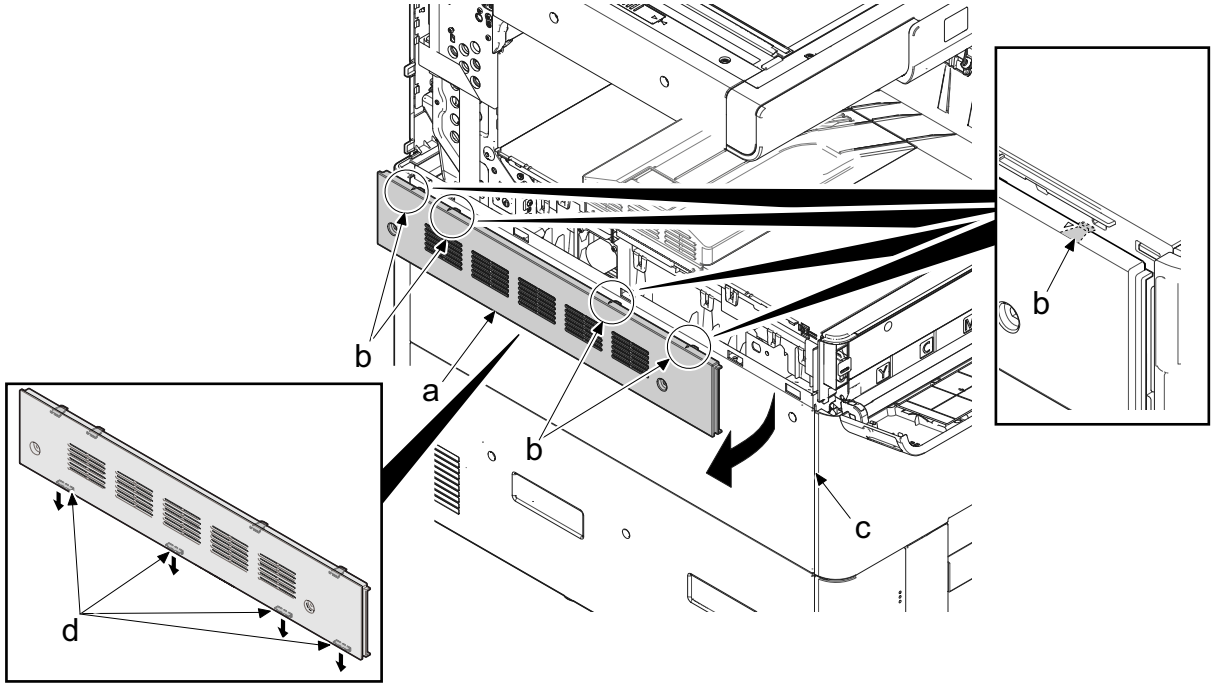

Notes for attaching

latching four lower hooks (c and the upper hook (b) then attach the top left cover (a).

6 Pull out the lower cassette.

7 Remove three screws (a) (M3x8).

8 Lift and remove four hooks (c) and remove left lower cover (b).

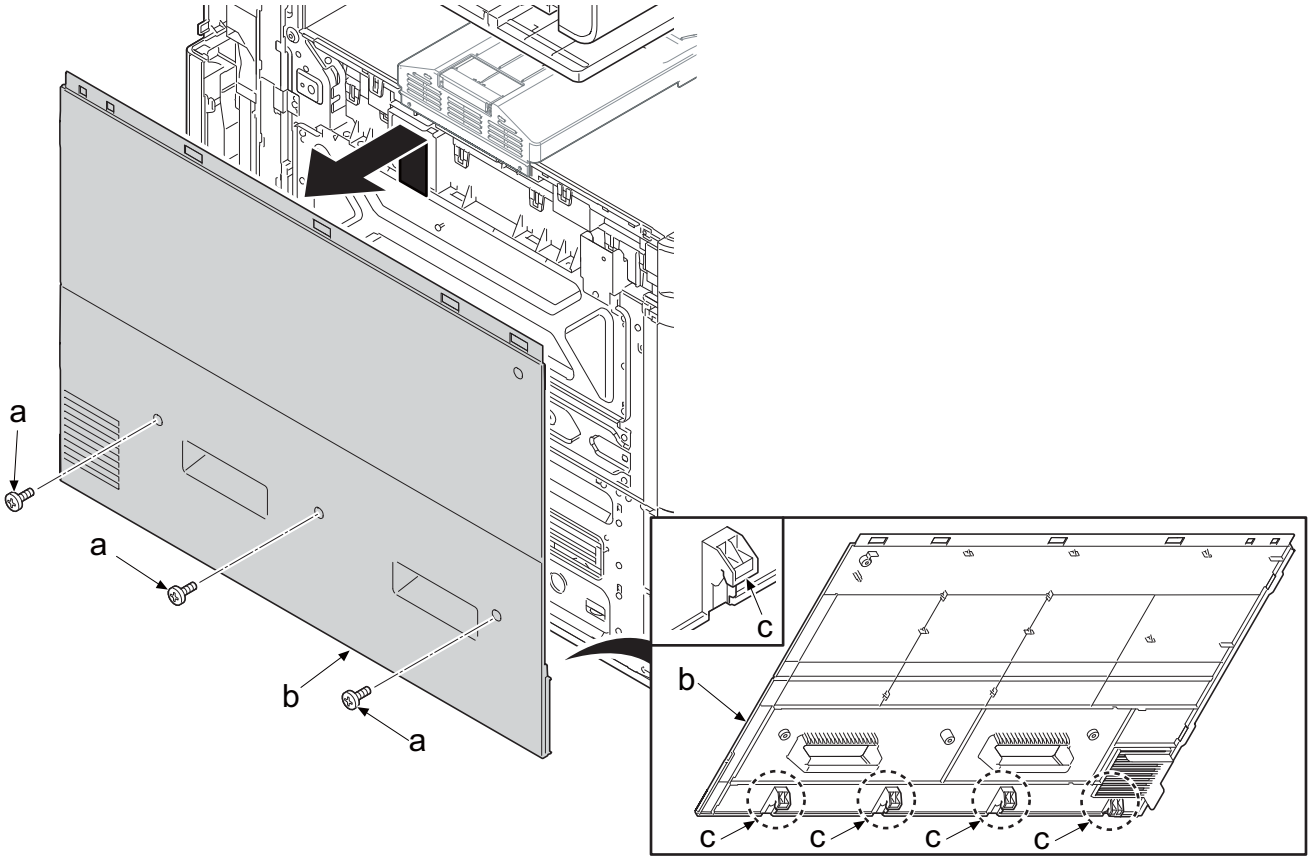

(1-9)Detaching and attaching the right top cover

1 Remove two screw (a) (M3x8).

2 After removing the front rib (c), remove the right top cover (b) in the direction of the arrow.

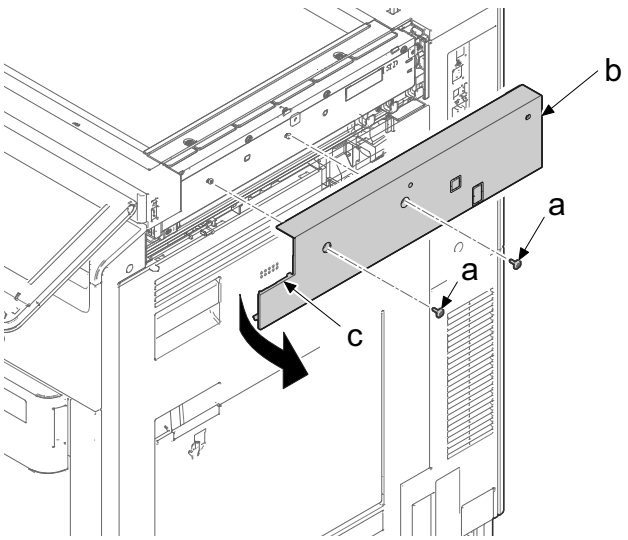

(1-10)Detaching and attaching the rear right top cover, rear right bottom cover

1 Detach the rear top cover.

2 Open the right cover.

3 Remove two screw (a) (M3x8).

4 Release the hooks (b) and remove the right rear top cover (c).

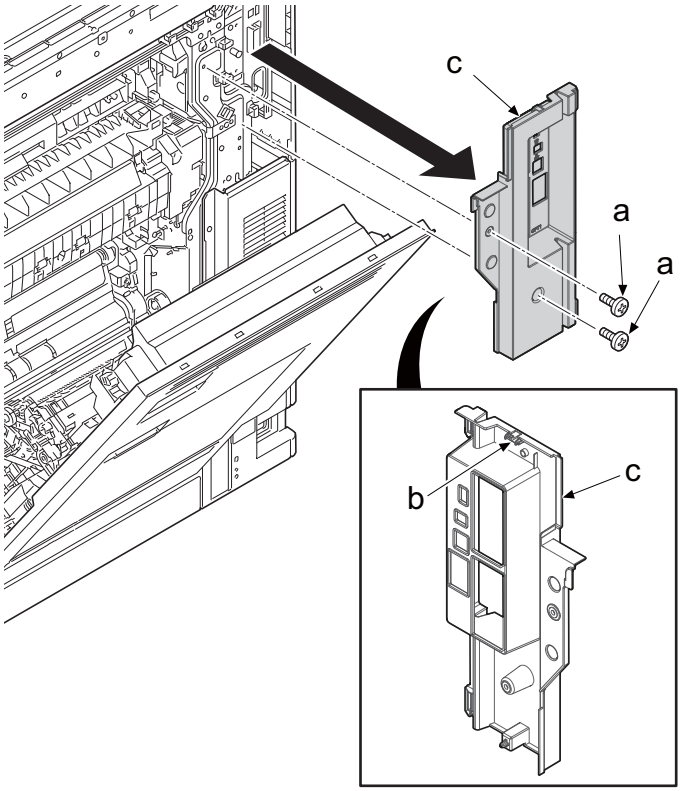

5 Remove three screws (a) (M3x8) and remove the right rear bottom cover (c) in the direction of the arrow.

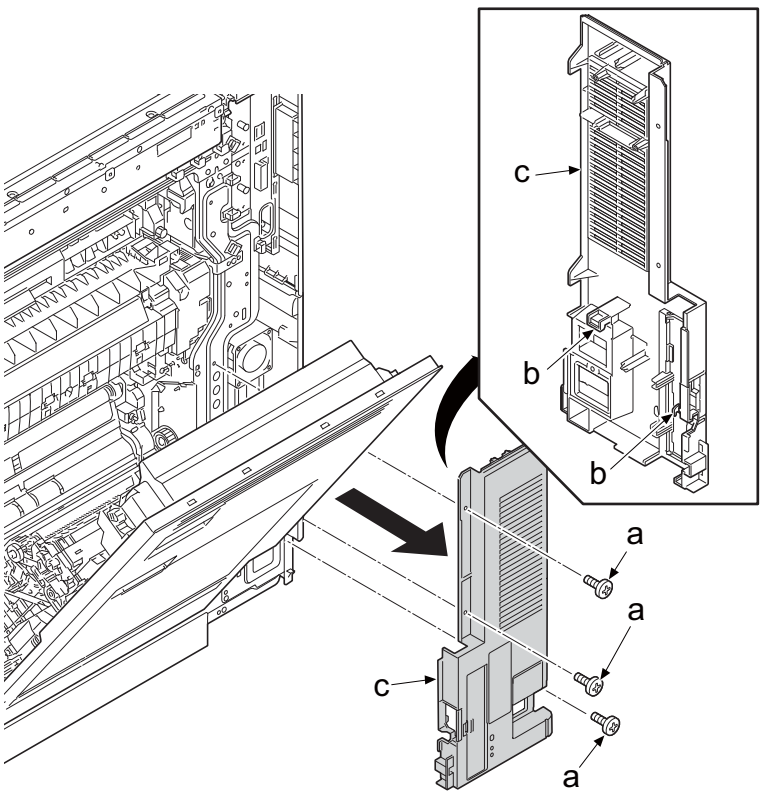

Notes for attaching

When reattaching it, latch two hooks (b) first.

(1-11)Detaching and attaching the right cover assembly

1 Open the right cover.

2 Remove the hooks of the damper spring (a).

3 Remove the stopper (c) of the fulcrum pin (b). Slide the arm (d) in the direction of the arrow and detach it from the fulcrum pin (b).

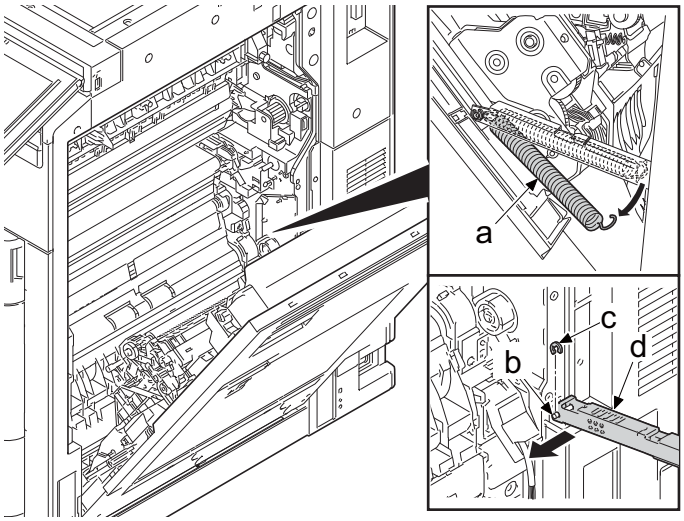

4 Rotate the wire cover (a).

5 Push both fulcrums and detach the DP wire cover (a).

6 Release the wire (b) from the hook (c) and disconnect two connectors (d).

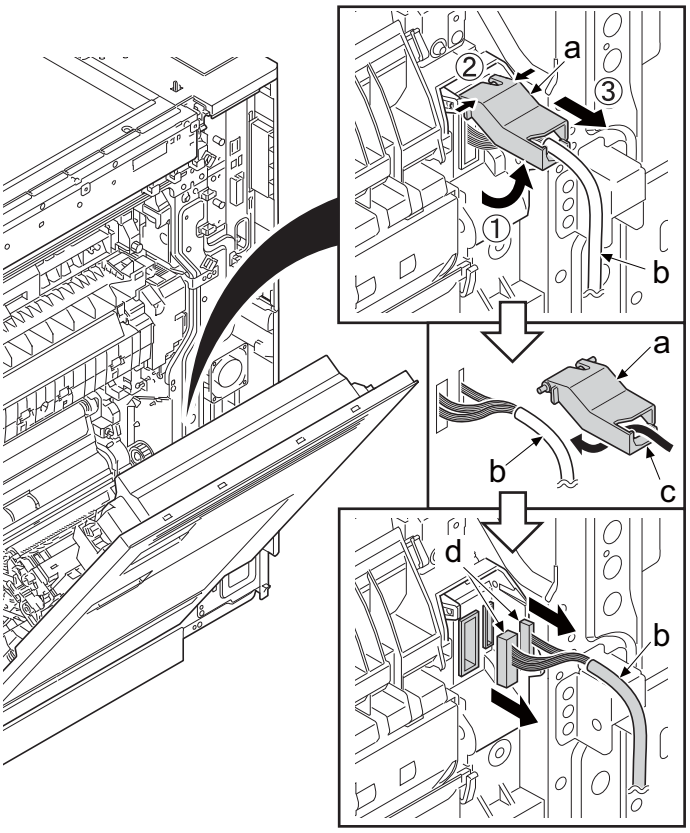

7 Remove the stopper (a), and slide the strap (b) then detach it from the pin (b).

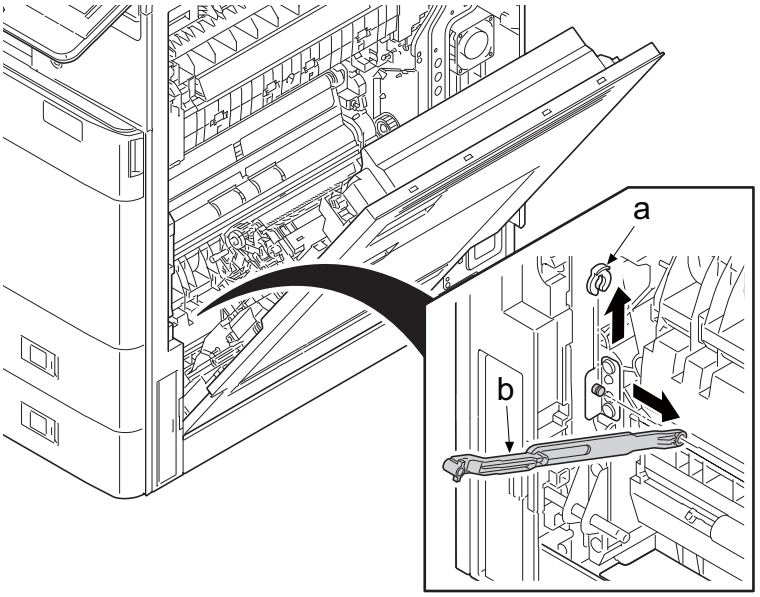

8 Open front (a) and back (b) of the handle cover.

9 Tilt up the front cover shaft (c). After that, slide it in the direction of the arrow

10 Tilt up the back cover shaft (a). After that draw up in the direction of the arrow.

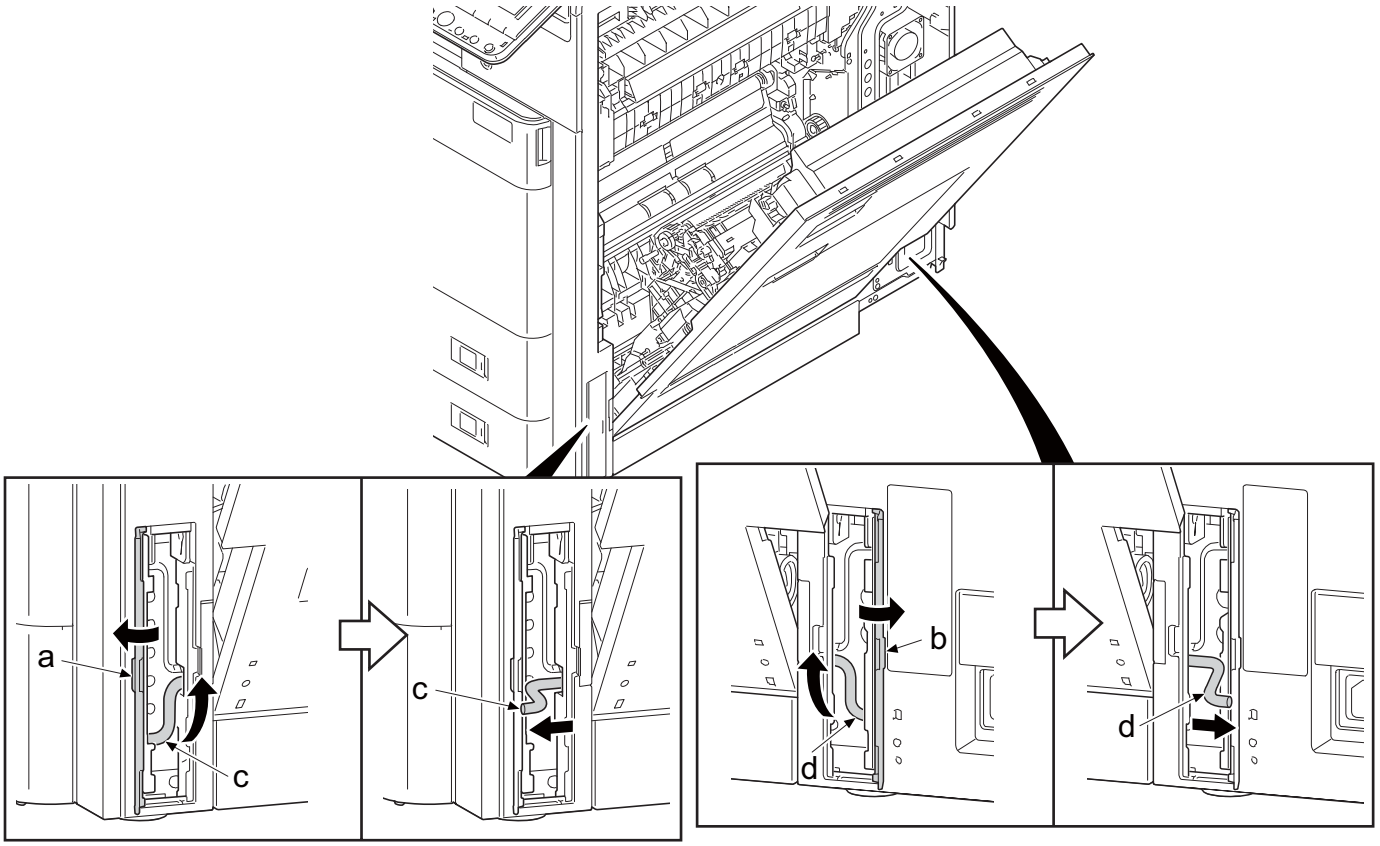

11 Detach the right cover assembly (a) in the direction of the arrow.

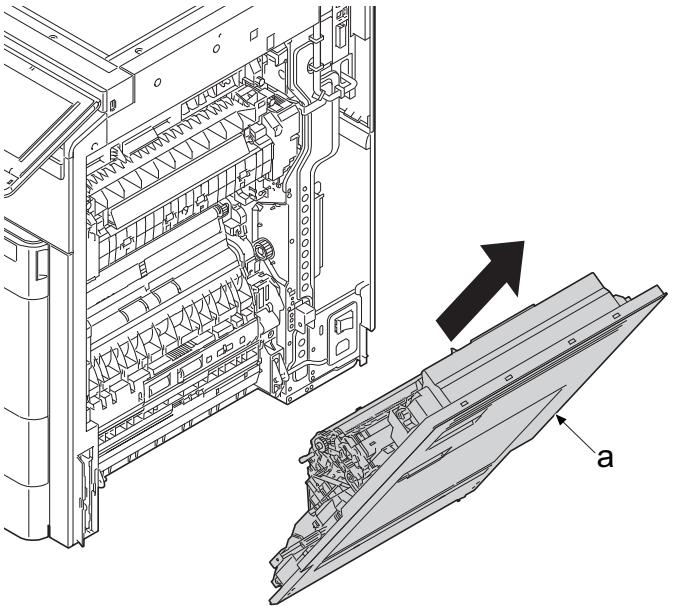

Detaching and attaching the conveying unit

12 Remove one screw (a) (M3x8).

13 Release two hooks (b) and remove the wire cover (c).

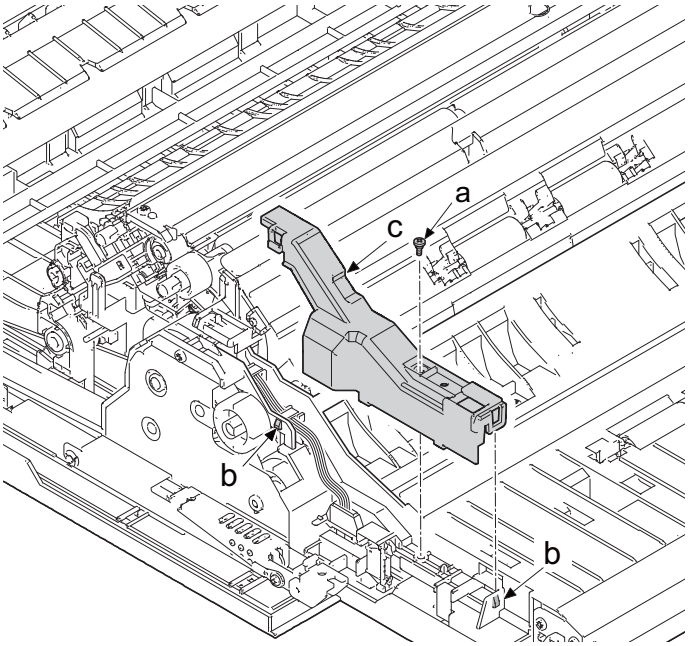

14 Disconnect the connector (a) and remove wire stoppers (b).

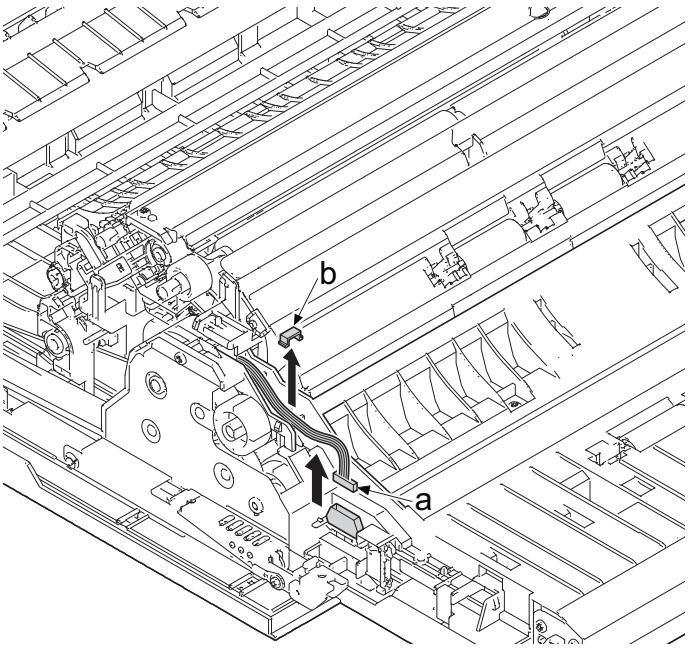

15 Put flat screwdriver (h) to the fulcrums of the middle guide (a) and get the holes (b) out from pins (c).

16 Rotate middle guide (a) to the direction (1) and pull up to the direction (2).

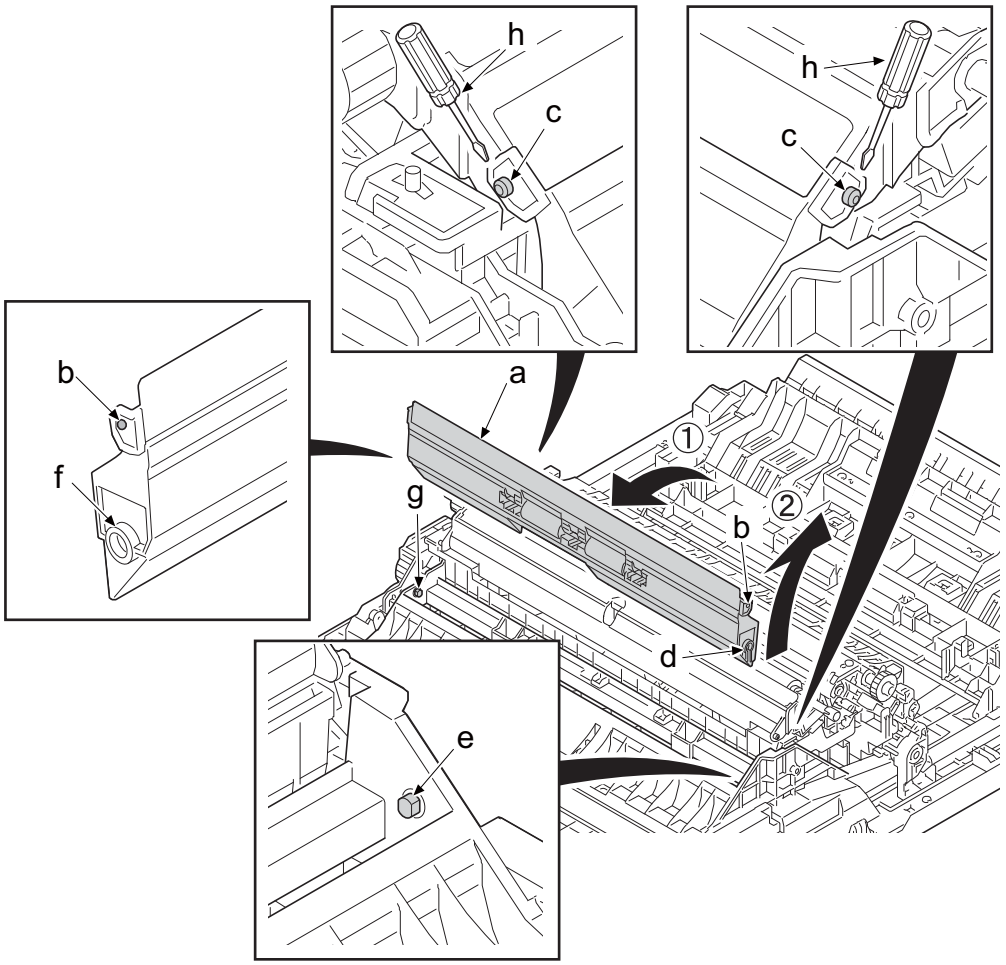

Notes for attaching

In order to put back the middle guide, insert pin (e) to hole (f) first and then insert to both side holes (b).

17 Rotate and open the resist guide (a).

18 Slide the stopper (b) in the direction of the arrow and detach it.

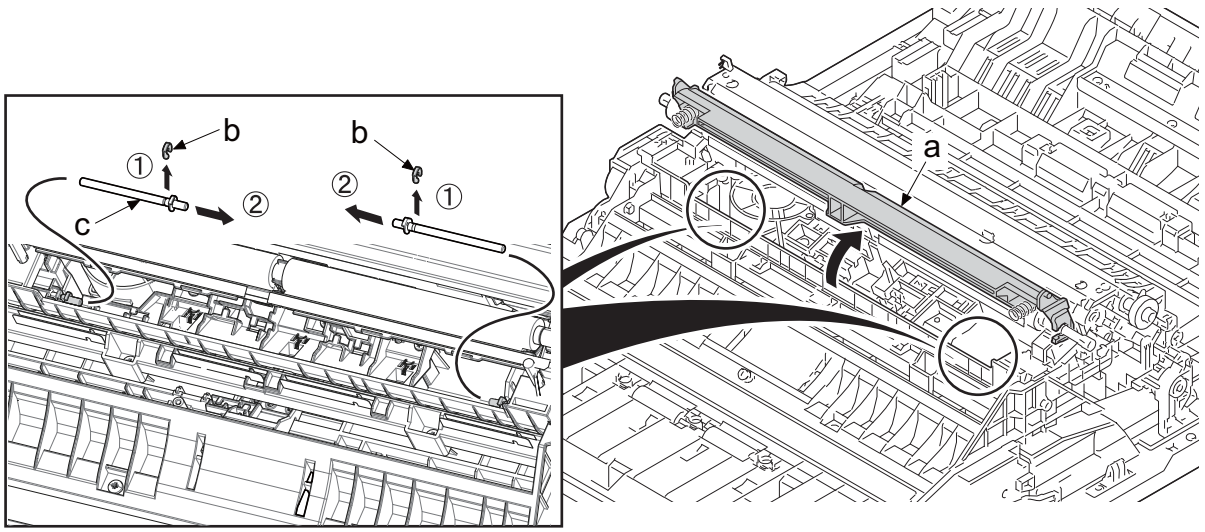

19 Detach the conveying unit (a) in the direction of the arrow.

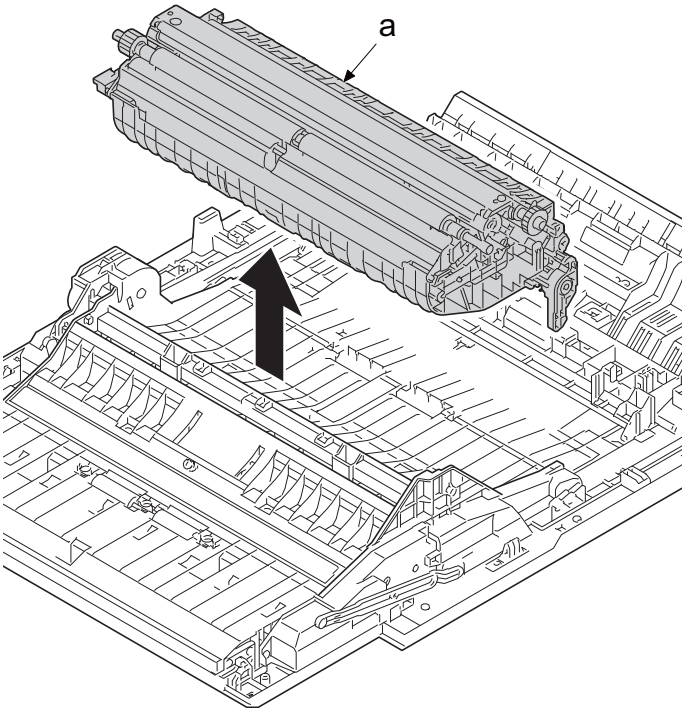

(2)Optical section

(2-1)Detaching and attaching the LSU

IMPORTANT

In case of removing the LSU from the machine and install it in the other machine, execute U412: Config ON --> OFF --> Start to perform the initialization of the LSU (Display "Complete") before removing the LSU from the machine.

1 Open the front cover (a) slightly.

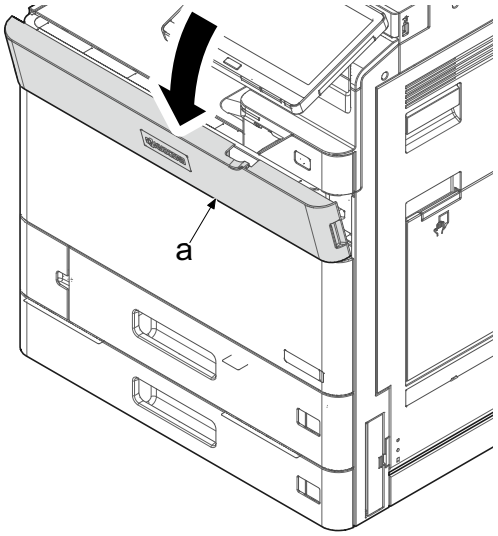

2 Open the front cover (a) and then open the front cover for maintenance (b) while grasping the upper left and right part.

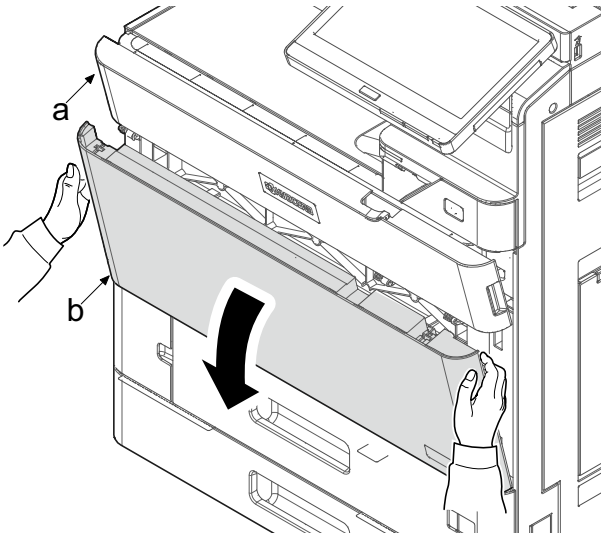

3 Open inner cover (a) pulling left and right lever (b) on the cover.

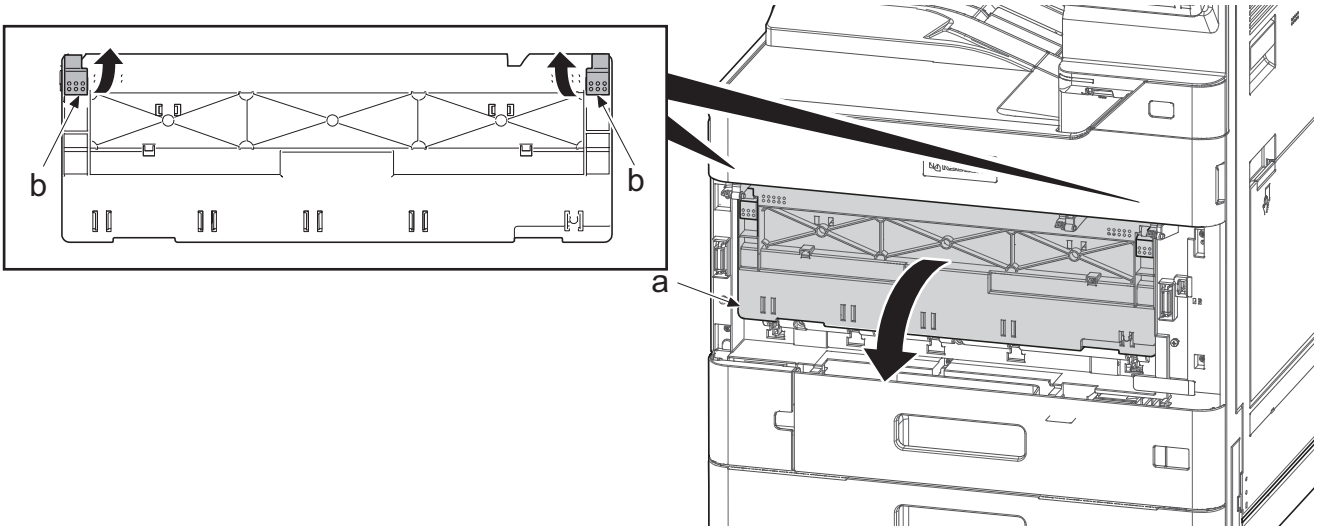

4 Pull out the regist cleaner (a) by holding the handle of it.

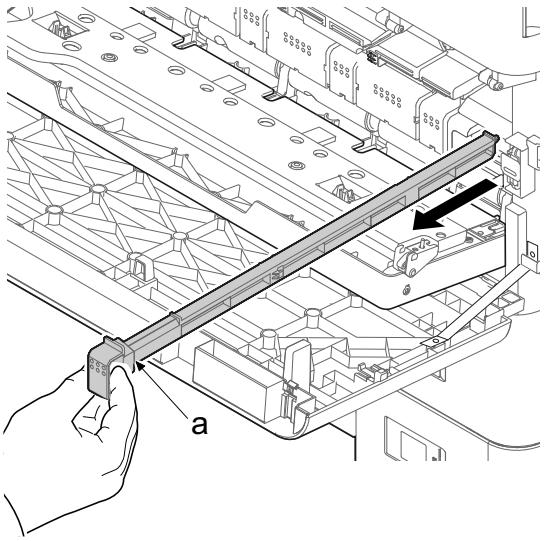

5 Open the right cover (a) of the main unit (b).

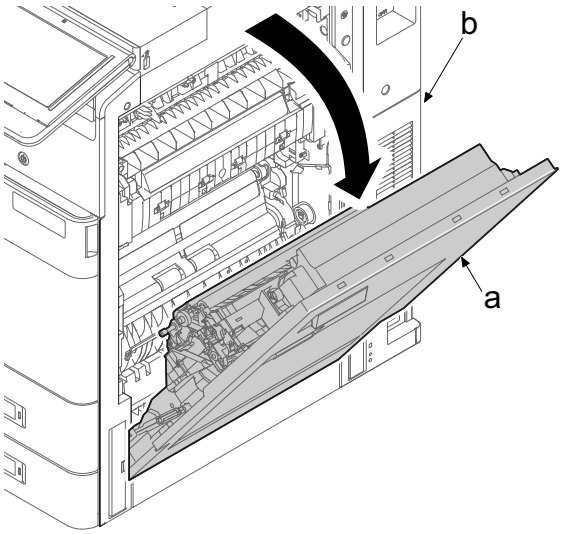

6 Remove the screw (a) (M3x8).

7 Detach the rear secondary transfer guide (b) in the direction of the arrow.

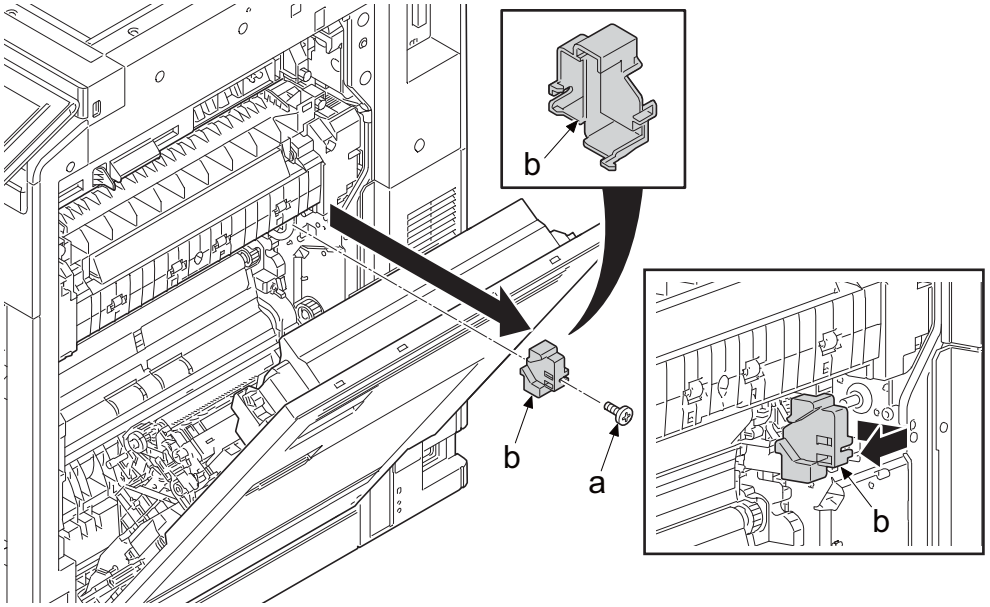

8 Remove the middle conveying unit wire (a) from the connector (b).

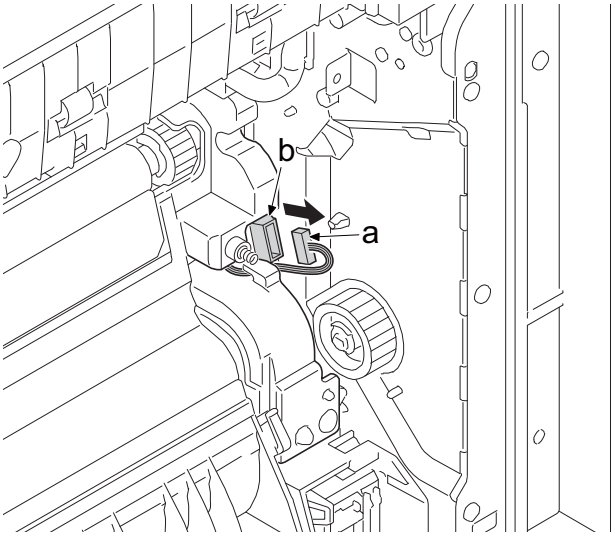

Notes for attaching

When reattaching it, connect the middle conveying unit wires (a) first and then insert to the rib (b).

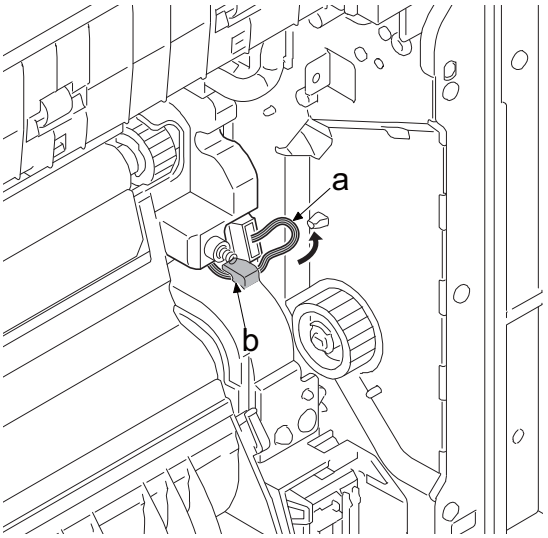

9 Remove the spring (a) of the right cover damper.

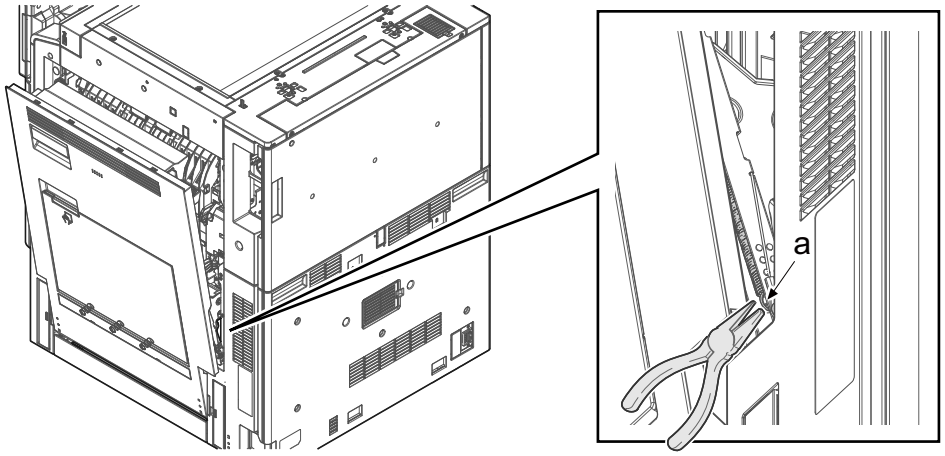

10 Remove the wire cover (a).

11 Remove two connectors (b).

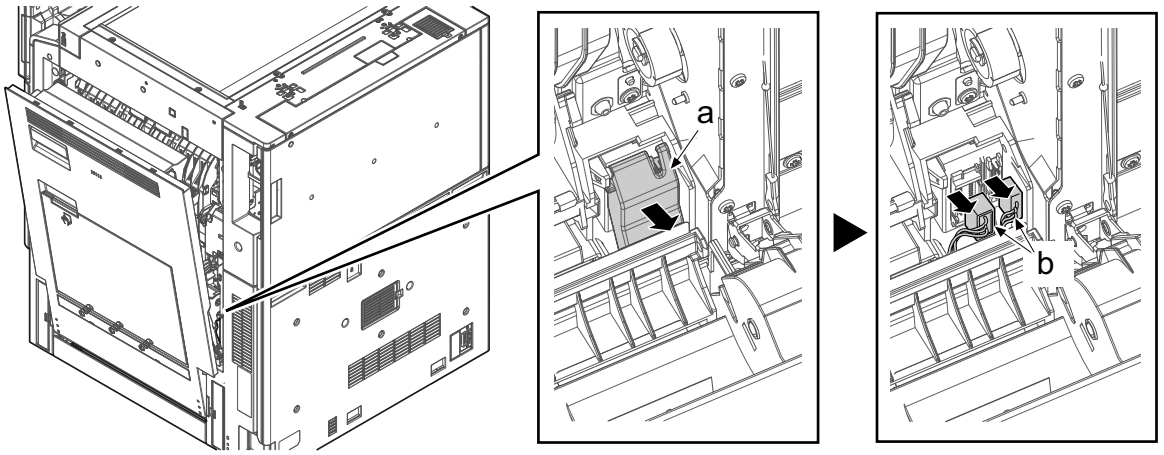

12 Remove the stopper (a) from fulcrum the and remove the arm (b).

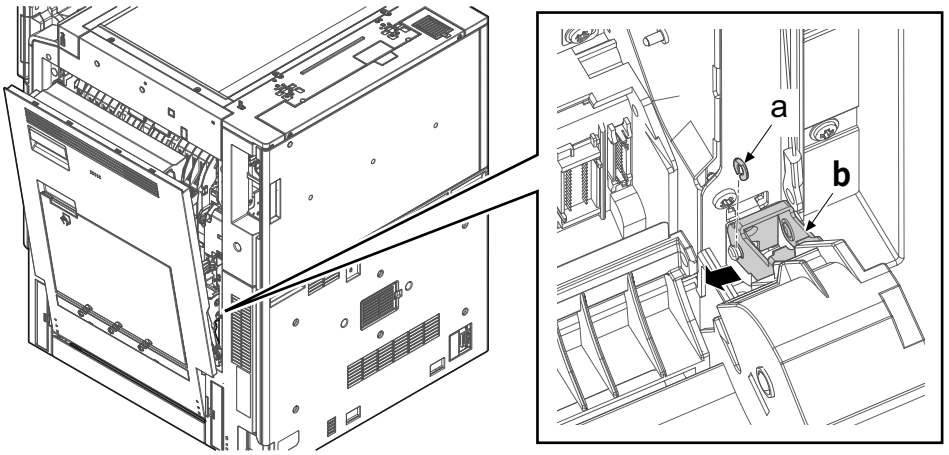

13 Remove the stopper (a) ,and slide the strap (b) and detach it from the pin (b).

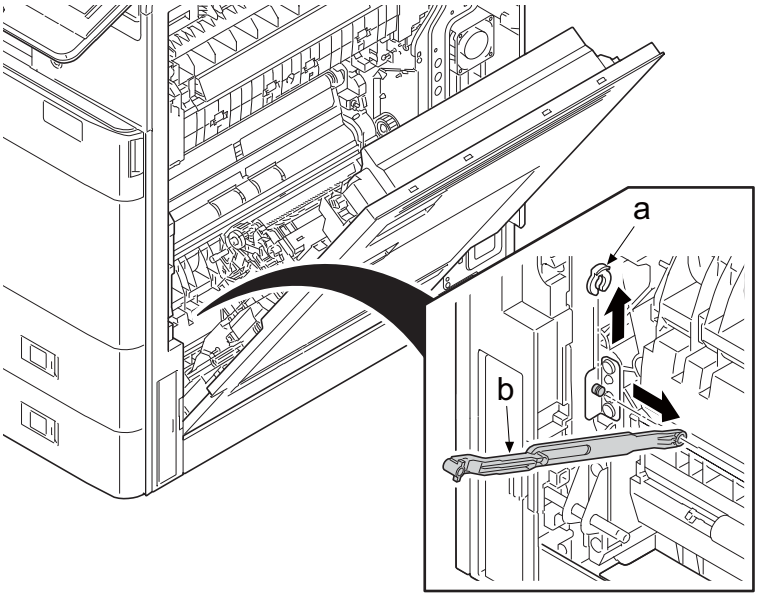

14 Remove four screws (a) (M3x8) and remove the middle conveying unit (b).

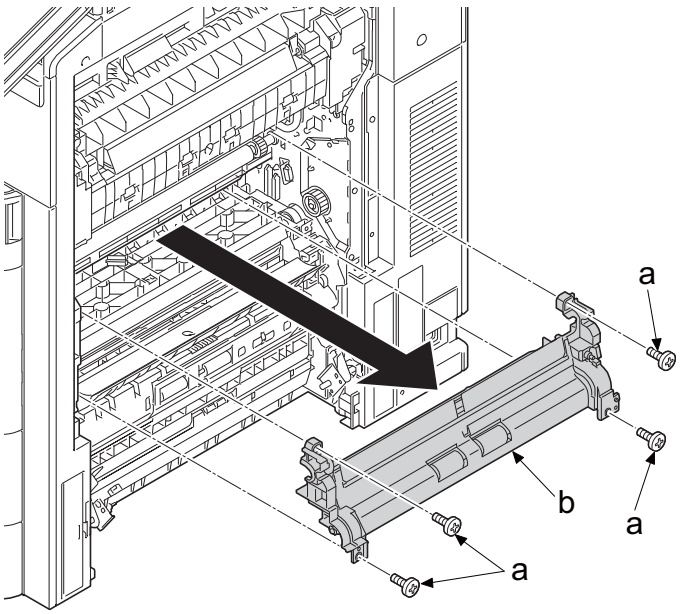

Notes for attaching

When attaching the middle conveying unit (c), align positioning part(a) to (d) and positioning hole (b) to (e).

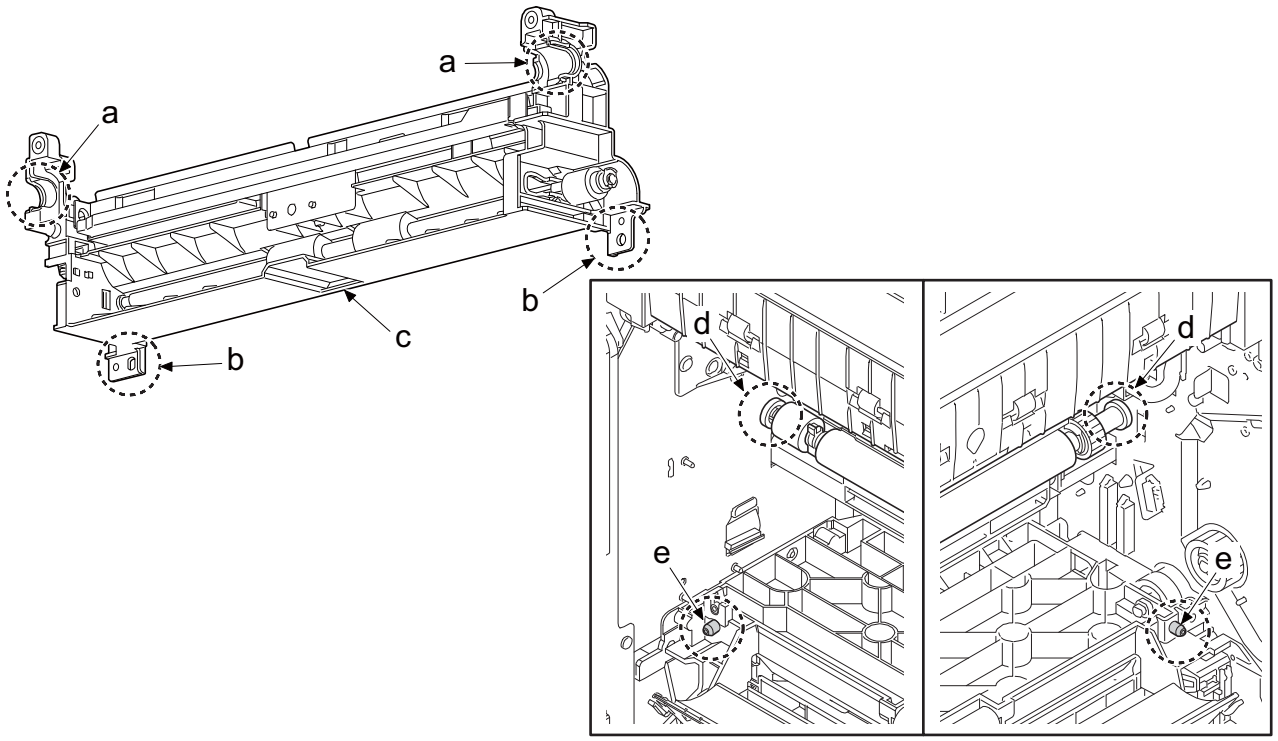

15 Loosen the LSU fixing pins (c) or spring (c) with a screwdriver (a) and remove them.

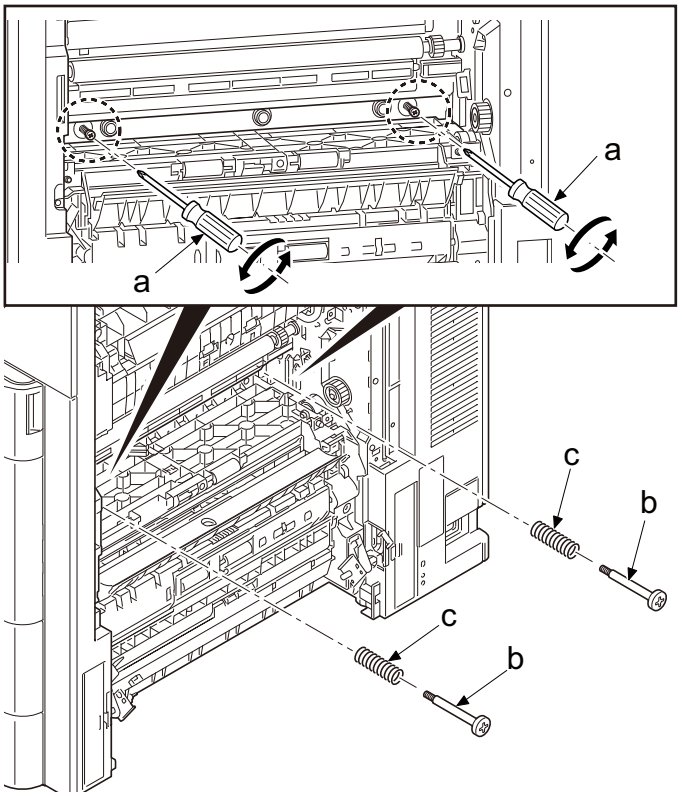

16 Remove two screws (a) (M3x8).

17 Release two hooks (c) and remove the left rear cover (b) in the direction of the arrow.

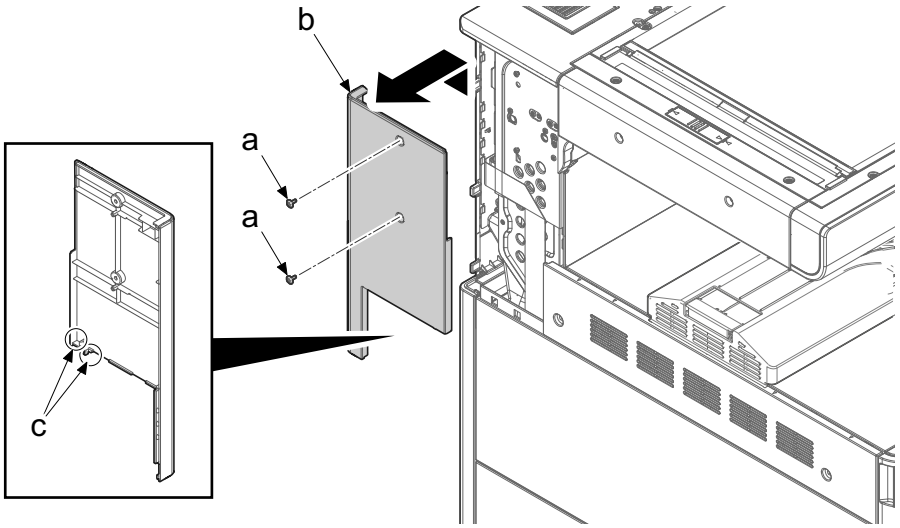

18 Open the front cover.

19 Remove two screws (a) (M4x10) from the left upper cover (c) and the screw (b) (M3x8) from the left lower cover.

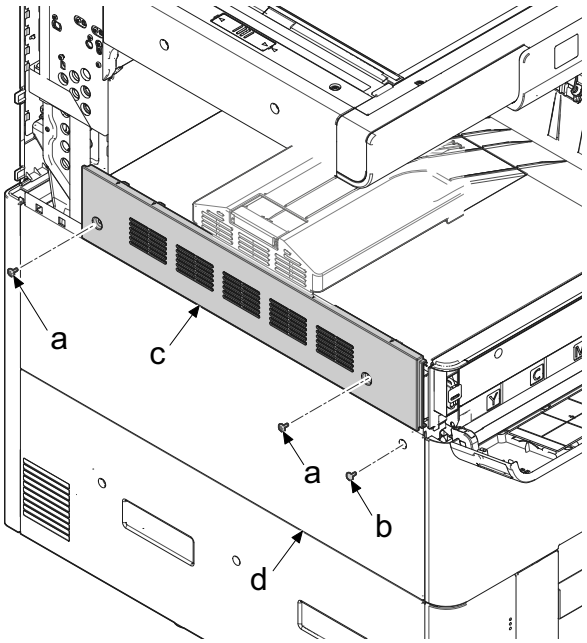

20 Release four hooks (b) in top of the left top cover while spread left lower cover (c) in the direction of the arrow, and remove the left top cover (a).

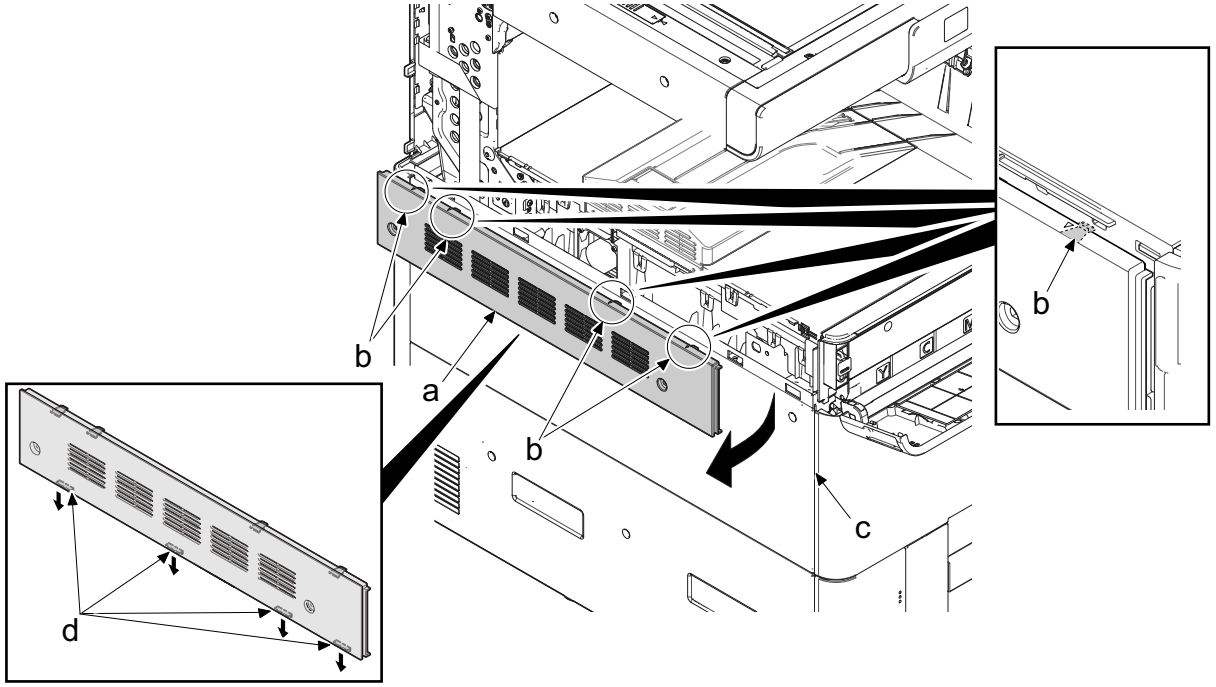

Notes for attaching

latching four lower hooks (c and the upper hook (b) then attach the top left cover (a).

21 Pull out the lower cassette.

22 Remove three screws (a) (M3x8).

23 Lift and remove four hooks (c) and remove left lower cover (b).

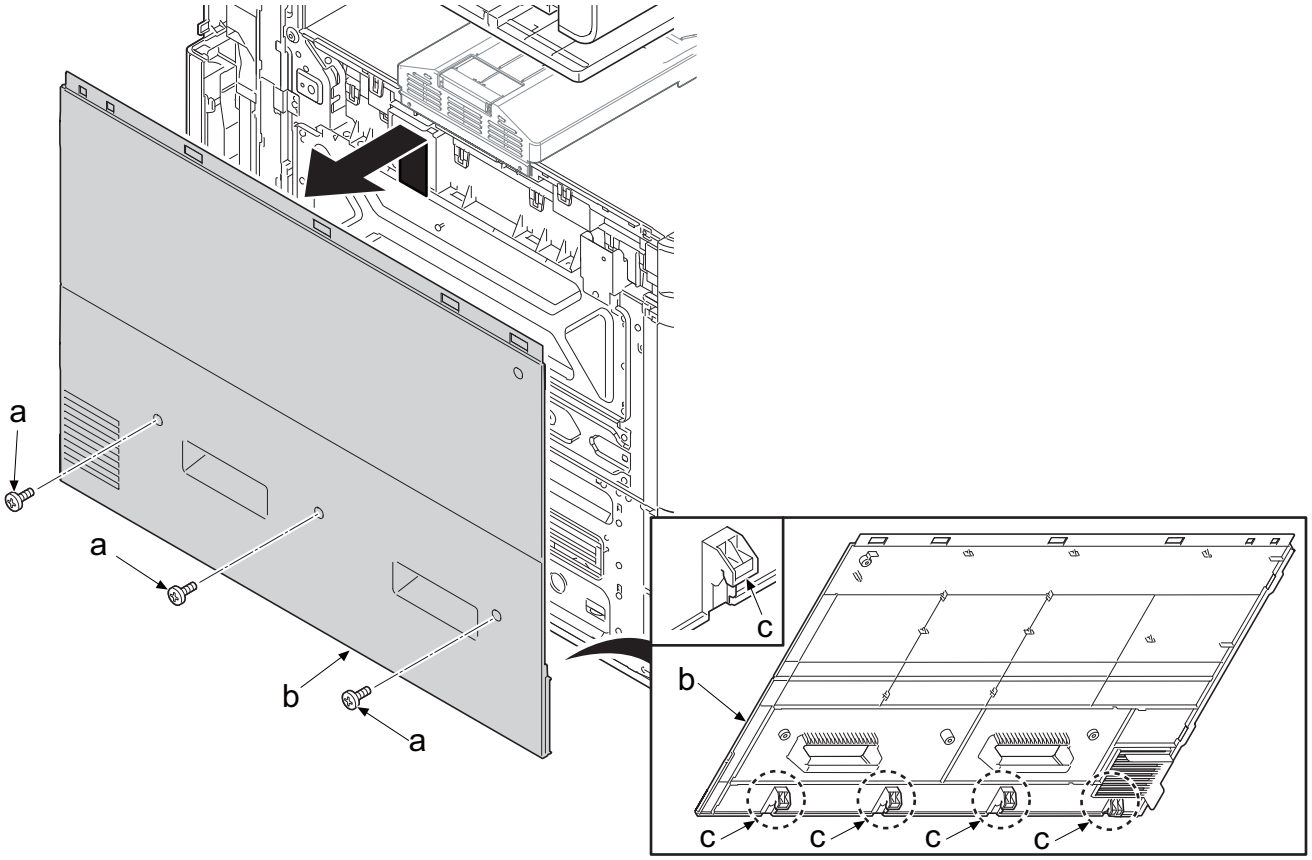

24 Remove six screws (a) (M3x8) and detach the LSU left stay (b).

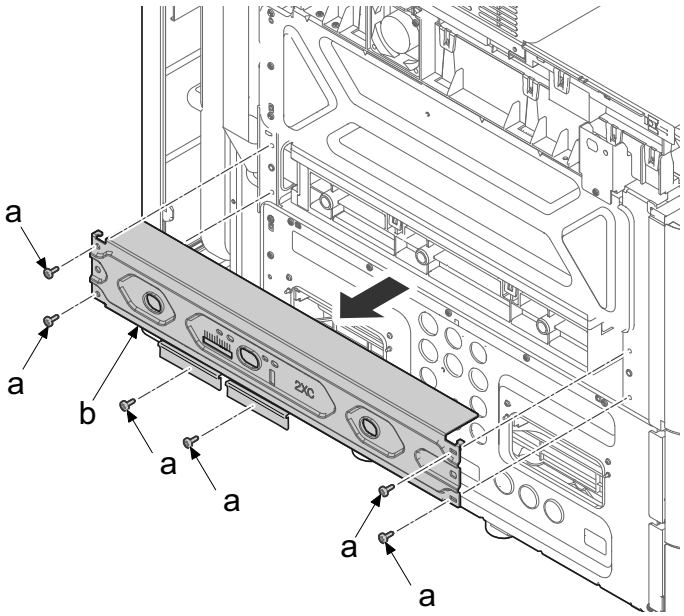

25 Pull out the laser scanner unit (a) half way.

- Disconnect the FFC connector (b) and connector (c).

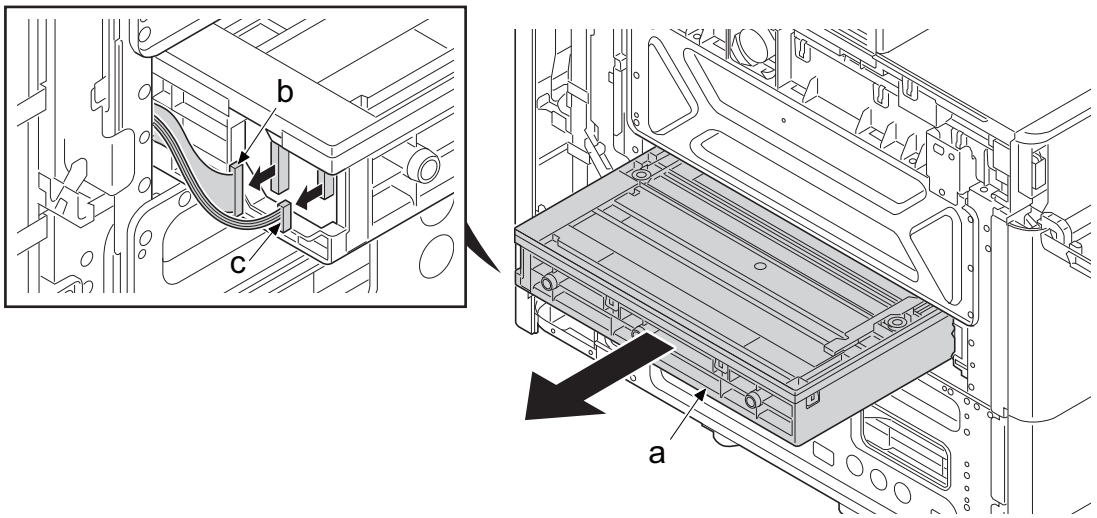

26 Pull out the laser scanner unit (a).

27 Check the laser scanner unit (a) and clean or replace it.

28 Reattach the parts in the original position.

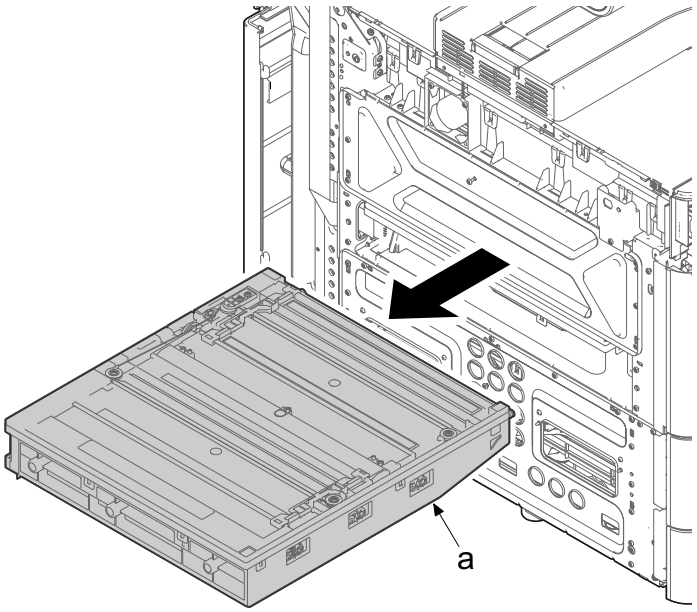

Notes for replacing the laser scanner unit

Execute the following adjustment after replacing the laser scanner unit.

1 Drum unit initial setting (maintenance mode U119): Execute

1 Input "119" using the numeric keys and press [Start] key.

2 Select [Execute] and press [Start] key.

- Drum setup operation starts.

3 Press [Stop] key.

2 ID correction operation setting (maintenance mode U464): Calib

1 Input "464" using the numeric keys and press [Start] key.

2 Select [Calib].

3 Select [Execute] and press [Start] key.

- Calibration starts.

4 Press [Stop] key.

3 Adjusting the uneven density (maintenance mode U412): Normal Mode

- Execute when you want to improve the density unevenness.

1 Input "412" using the numeric keys and press [Start] key.

2 Select [Normal Mode].

3 Press [Start] key.

- Output the test chart with the initial light intensity setting. (1st sheet)

4 Place approximately 20 sheets of white paper on the test chart and set as original.

5 Press [Start] key. Correction starts.

- If the initial density unevenness is small, calibration will be executed automatically. (Steps 6 to 11 are unnecessary.)

6 Press [Start] key after completing correction. Output the test chart. (2nd sheet)

- Output with 20% less light intensity than the 1st test chart.

7 Place approximately 20 sheets of white paper on the test chart and set as original.

8 Press [Start] key. Correction starts.

9 Press [Start] key after completing correction. Output the test chart. (3rd sheet)

10 Place approximately 20 sheets of white paper on the test chart and set as original.

11 Press [Start] key.

- Check the result of the correction. When correction has normally completed, [Finish] is displayed.

12 Press [Stop] key.

4 Auto halftone adjustment (maintenance mode U410)

1 Input "410" using the numeric keys.

2 Press [Start] key.

- Execution information screen is displayed.
- Test chart 1, 2 and 3 are output on the A4/Letter paper.

3 Place the test chart 1 on to platen glass table with face down and arrow side far.

- Put approximately 20 sheets of white paper on to the chart.

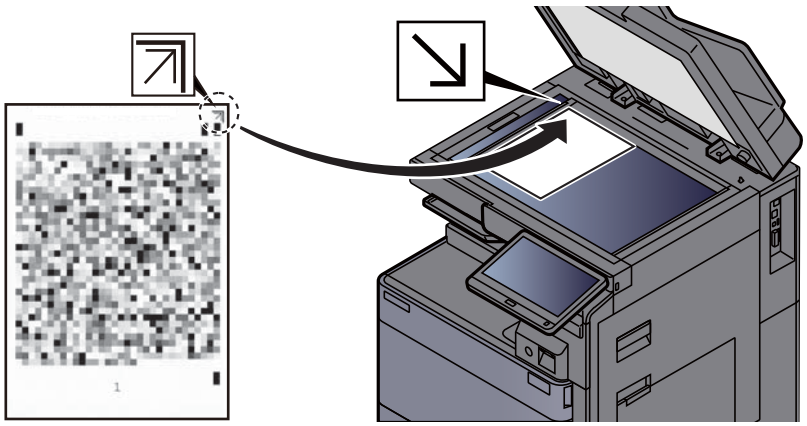

4 Press [Start] key.

- The 1st auto adjustment is executed.

5 Once [OK] comes up then continue with chart 2 and 3 repeating step 2 to 3.

6 [Finish] displays after normal completion.

5

1 Exiting from the maintenance mode

2 Input "001" using the numeric keys and press [Start] key.

- The maintenance mode is exit.

(2-2)Detaching and attaching the lens unit

1 Remove two screws (a) (M3x8).

2 After removing the front rib (c), remove the right top cover (b) in the direction of the arrow.

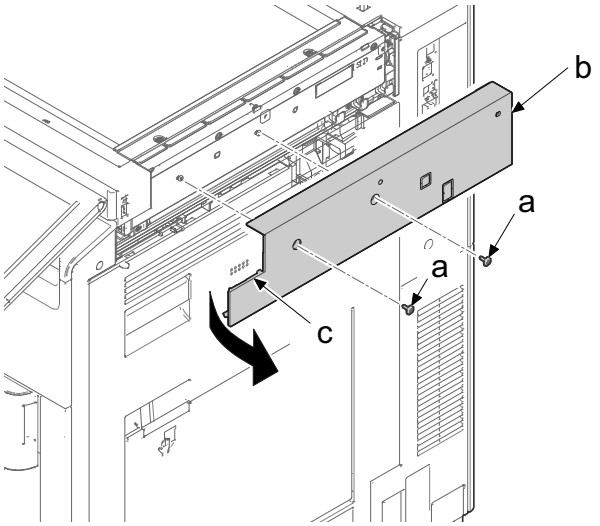

3 Remove two screws (a) (M3x8) and remove the right ISU cover (b).

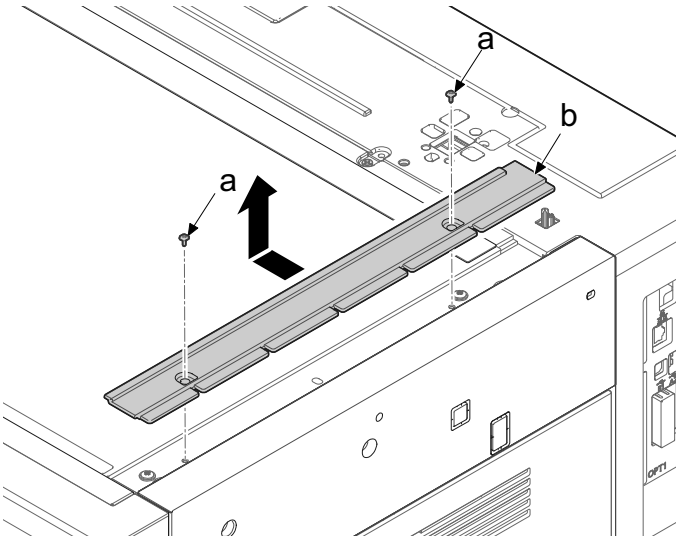

4 Detaches the contact glass (a) in the direction of the arrow.

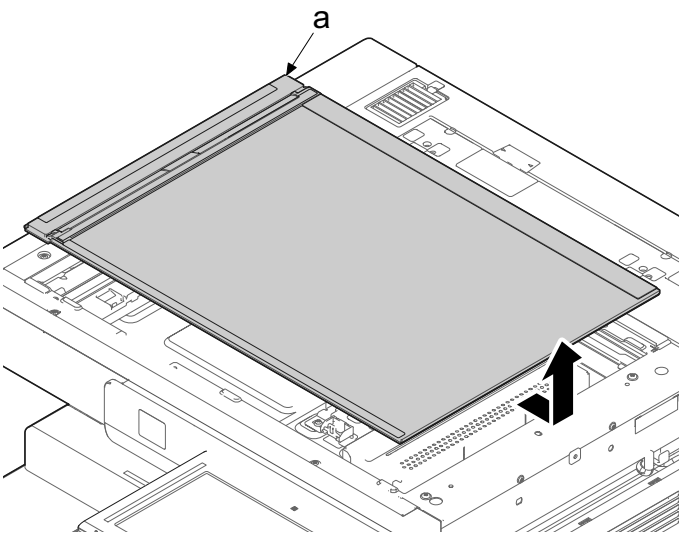

5 Remove five screws (a) (M3x8) and detach the lens cover (b).

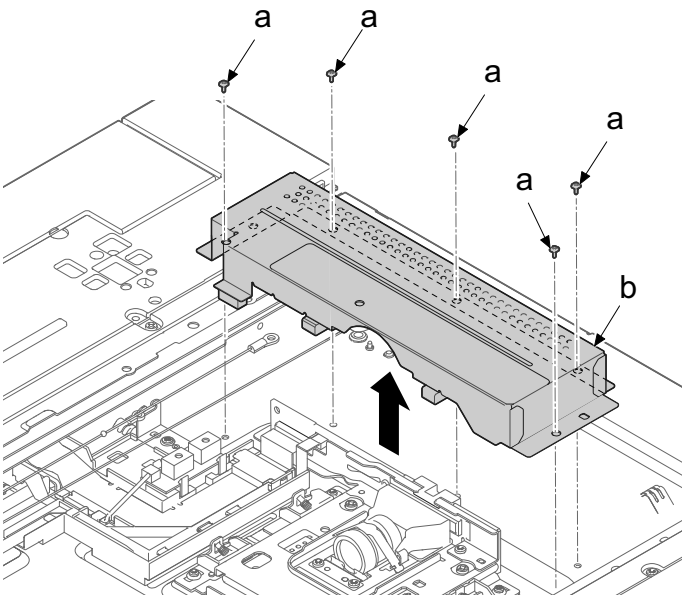

6 Remove the FFC (a).

7 Remove FFC from FFC connector (b).

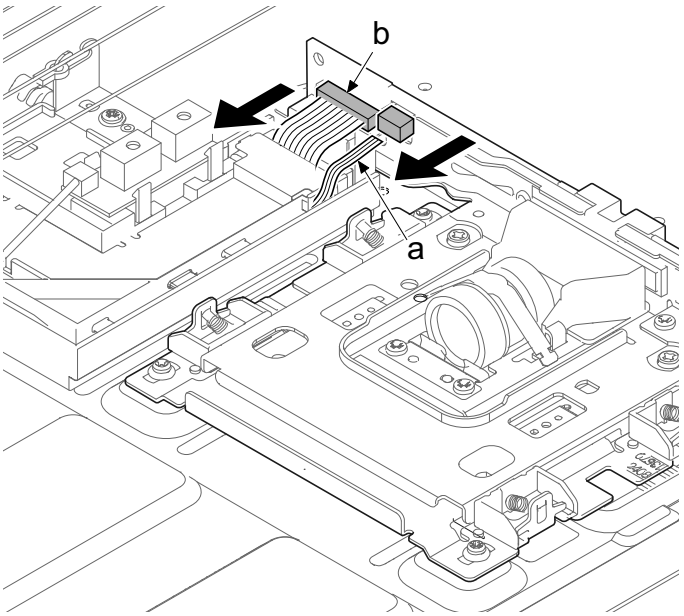

8 Remove four screws (a) (M3x8).

9 Detaches the lens unit (b) in the direction of the arrow.

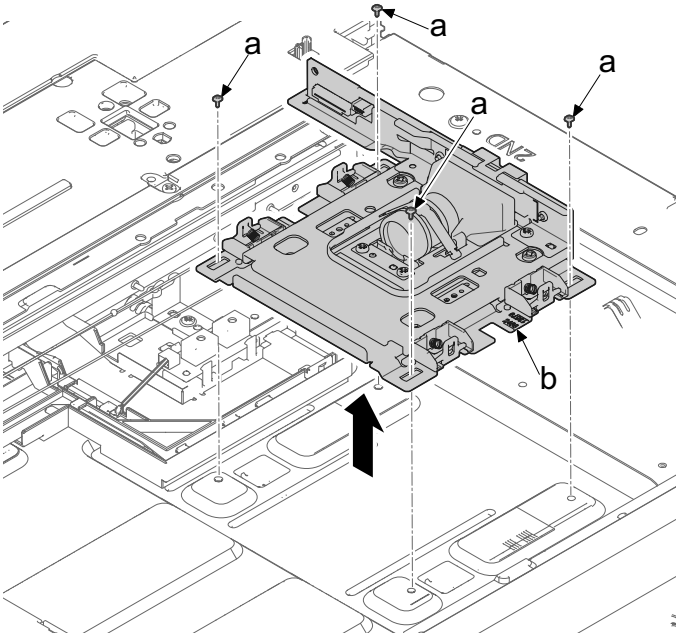

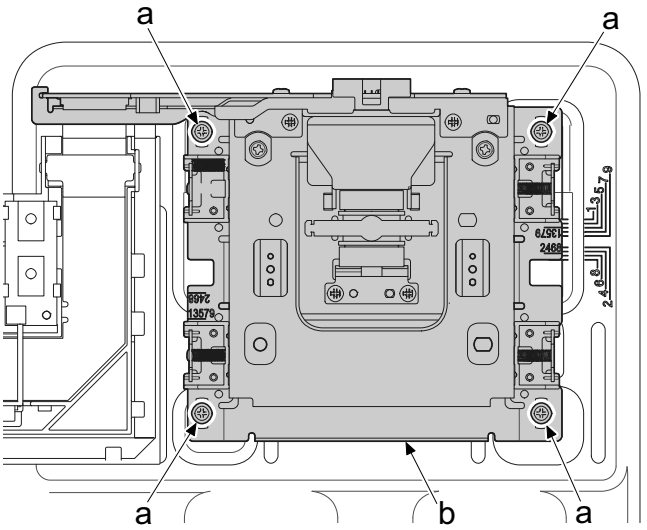

Attaching the lens unit

Fix the position of lens unit (a) by the following.

The right and leftward of machine: Confirm the number ⓐ on the label that affixed on the lens (b). Match the line numbers (b) and number (c) on the label.

The rear and frontward of machine: Match the edge (e) of lens unit (a) to the positioning line (d) on frame side.

Fix the lens unit (a) as before with four screws.

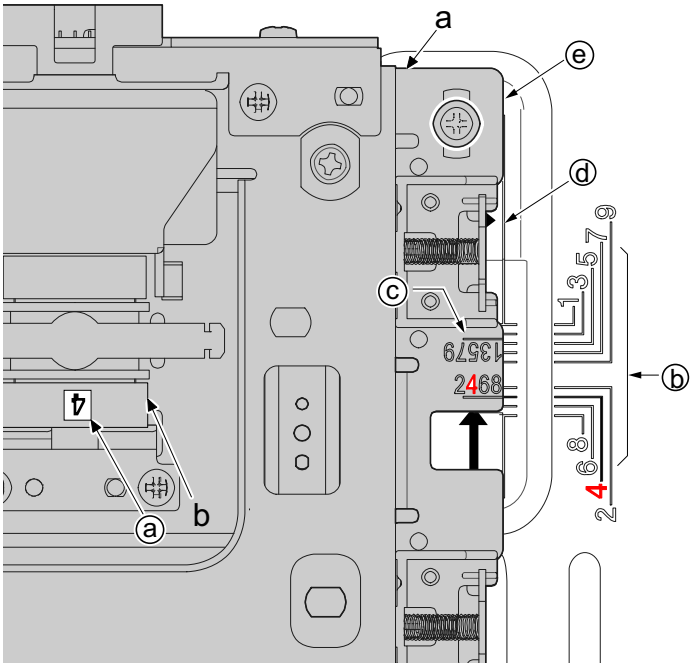

(2-3)Detaching and attaching the lamp unit

1 Detach the original cover or the document processor.

2 Remove two screws (a) (M3x8) and remove the right ISU cover (b) in the direction of the arrow.

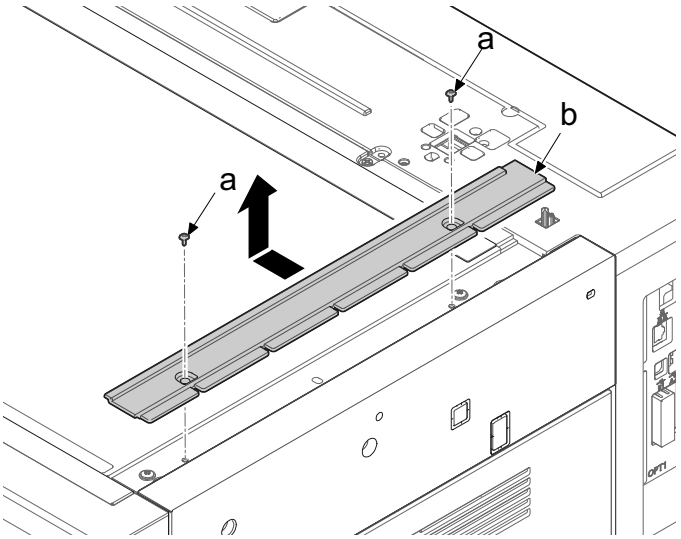

3 Detach the contact glass (a) in the direction of the arrow.

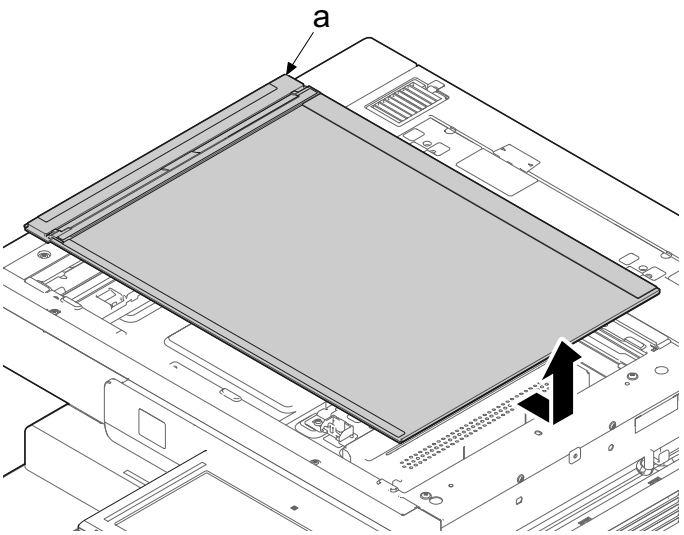

4 Remove two screws (a) (M3x8) and then remove the front glass cover (b).

* : Remove the right side of the machine first and then detach it.

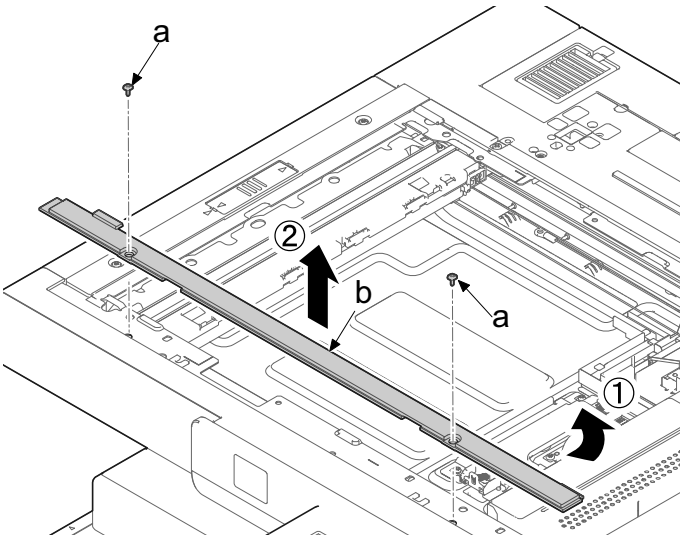

5 Remove two pins (a) (M3x8) and then remove the rear glass cover (b).

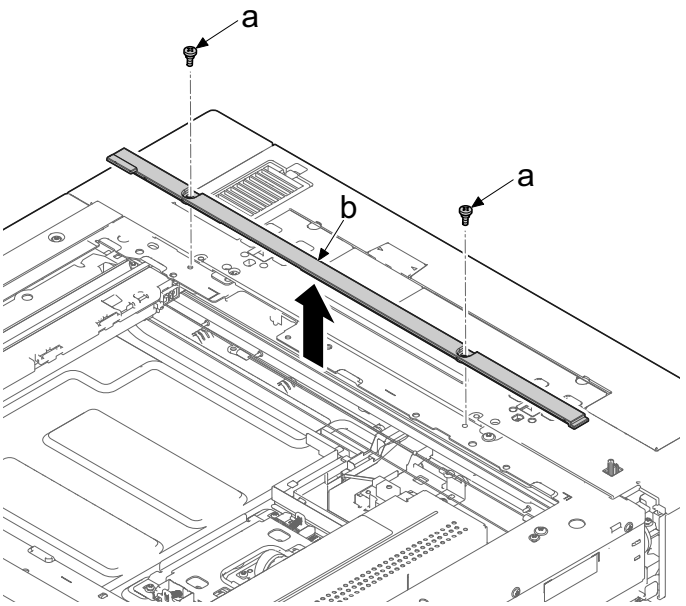

6 Peel off two sheets (a).

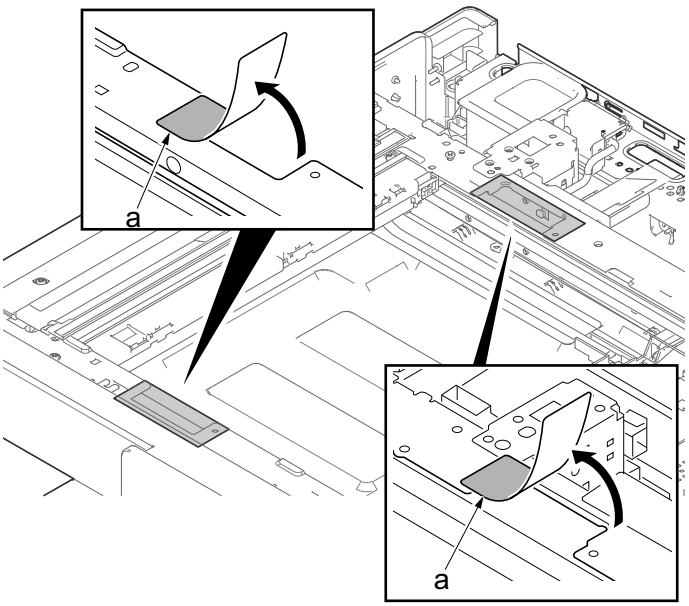

7 Move the lamp unit assembly (a) to the cut-out (b).

8 Remove FFC (f) from FFC connector (e).

9 Remove two hooks (g) and remove FFC guide (h) from the lamp unit (a).

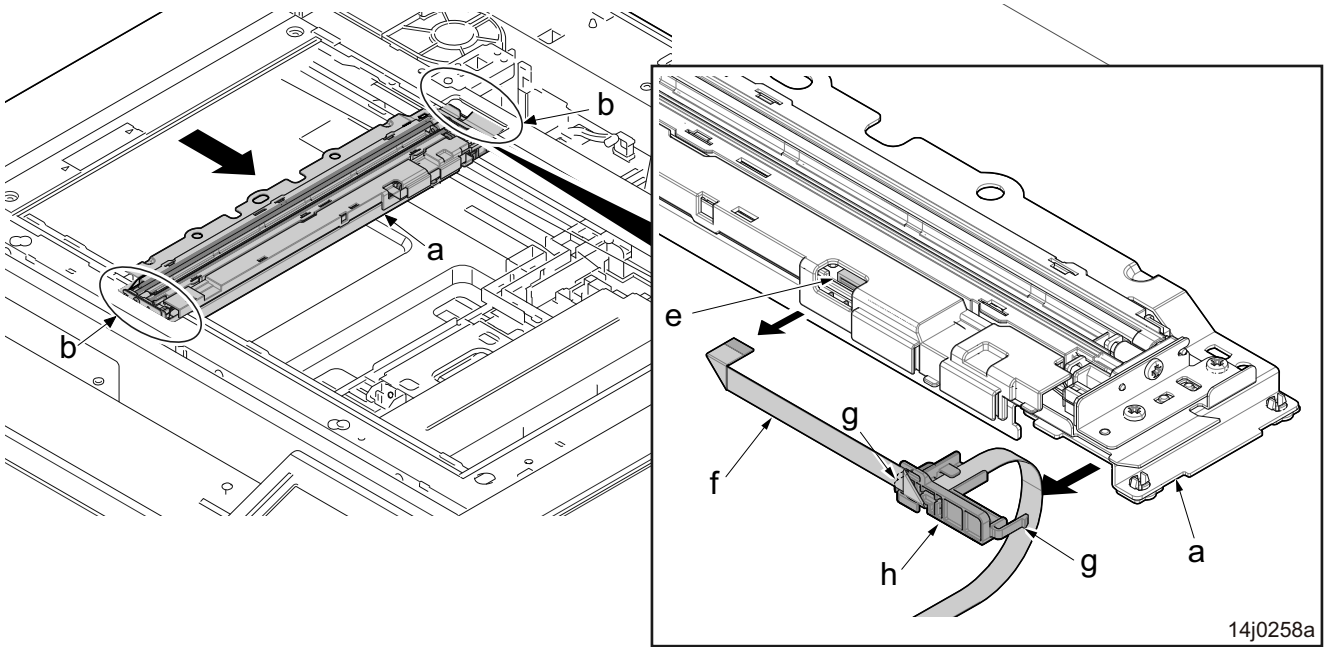

10 Remove two screws (a) (M3x8) and remove the lamp unit (b) from mirror frame A (c).

11 Check or replace the lamp unit (b), and then reattach the parts in the original position.

12 When replacing the lamp unit (b), execute maintenance mode U411 (adjusting the scanner automatically).

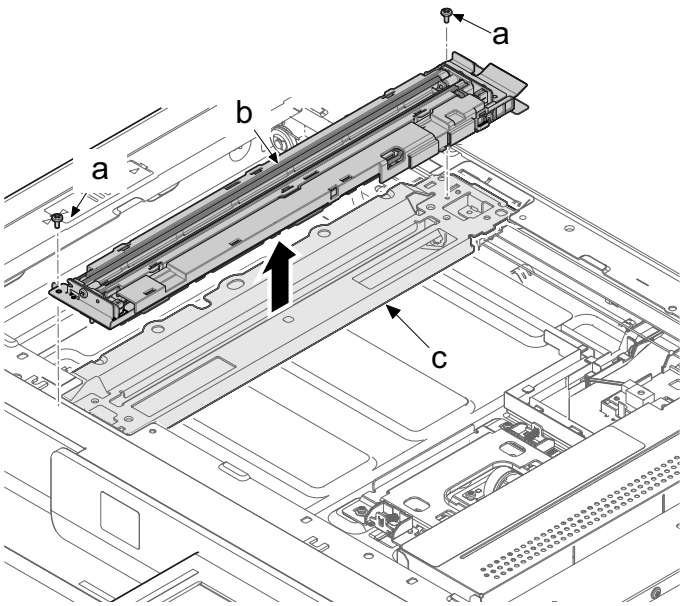

(2-4)Detaching and attaching the scanner wires

Precautions

When fitting the scanner wire, be sure to use specified parts below.

- Machine front side (P/N: 302V817020 (gray))
- Machine rear side (P/N: 302V817010 (black))

Tools for fitting the wire

- Two frame securing tools (P/N: 302NL1711*)
- Two scanner wire stoppers (P/N: 302RH9401*)

1 Detach the right top cover.

2 Detach the ISU right cover.

3 Detach the contact glass.

4 Remove two screws (a) (M3x8) and then remove the front glass cover (b).

- Remove the right side of the machine first and then detach it.

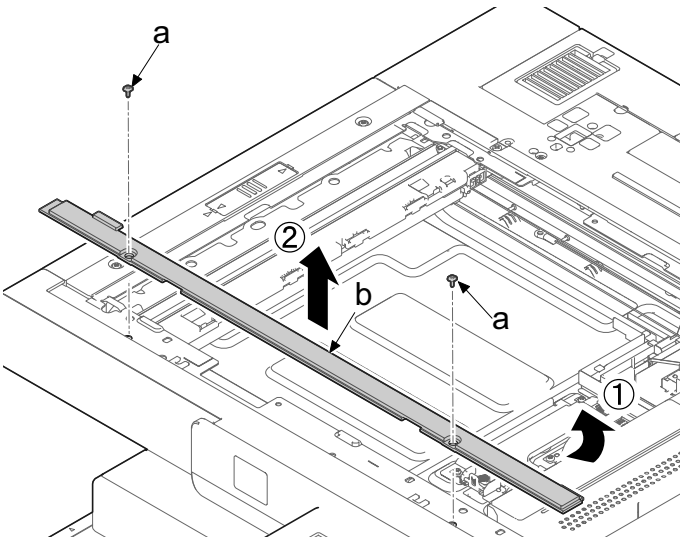

5 Remove two pins (a) (M3x8) and then remove the rear glass cover (b).

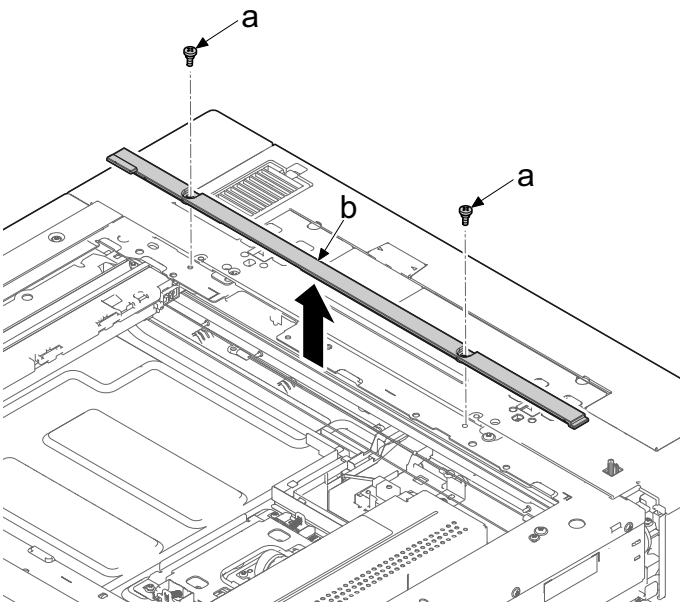

6 Peel off two sheets (a).

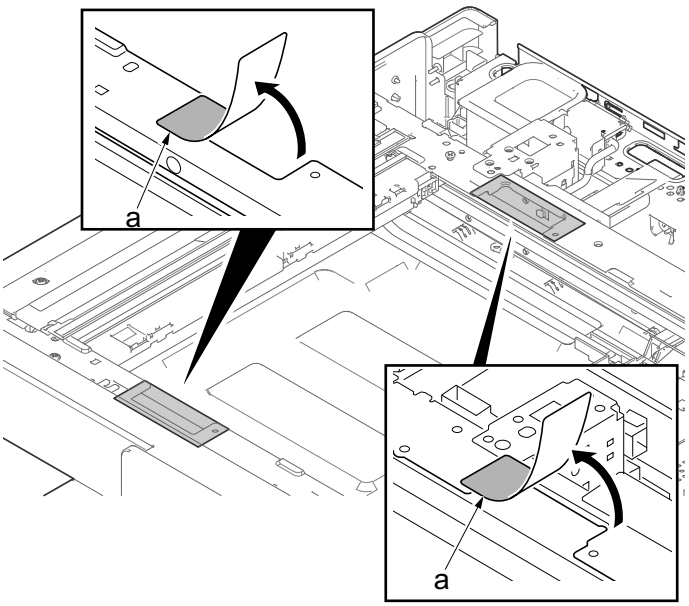

7 Move the lamp unit assembly (a) to the cut-out (b).

8 Remove FFC (f) from FFC connector (e).

9 Remove two hooks (g) and remove FFC guide (h) from the lamp unit (a).

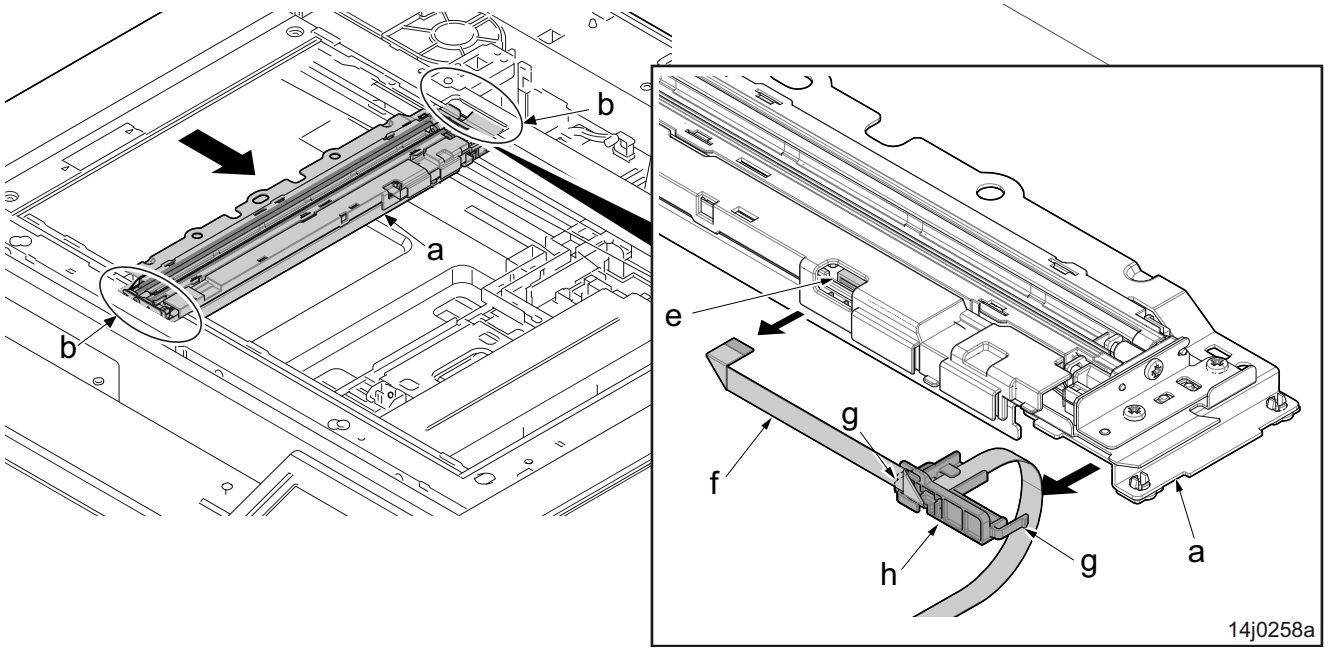

10 Remove two screws (a) (M3x8) and remove the lamp unit (b) from mirror frame A (c).

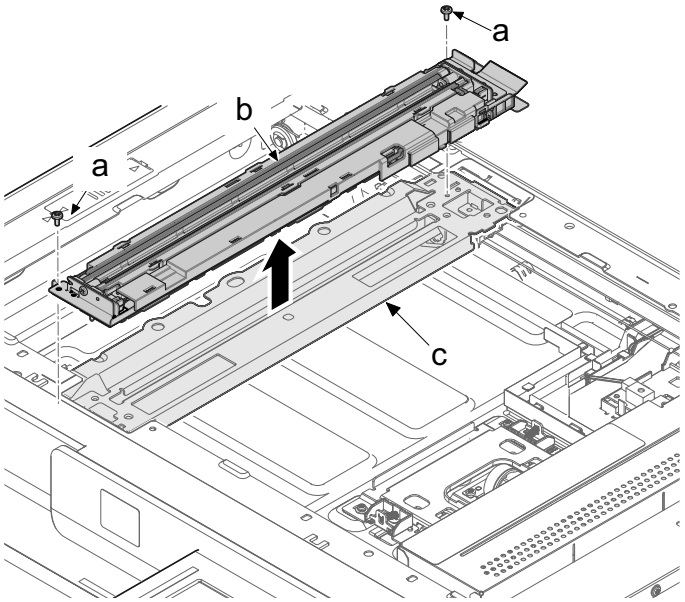

11 Remove each one screw (c) (M3x×8), the front wire presser plate (d) and the rear wire presser plate (e) from mirror frame A (f).

12 Detach the mirror frame A (f) from the main unit.

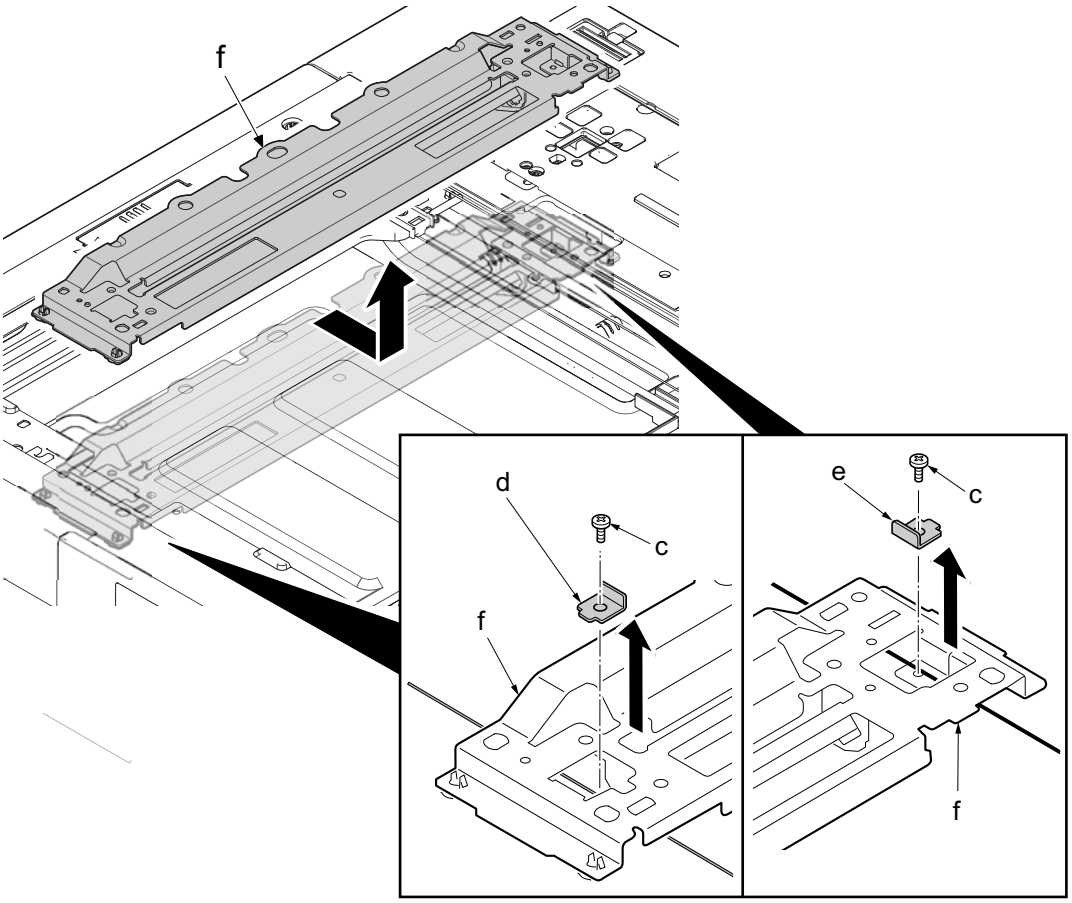

13 Detach the round terminals on the left side of scanner unit (a) from the scanner wire springs (c).

14 Detach the scanner wire (d) from the main unit.

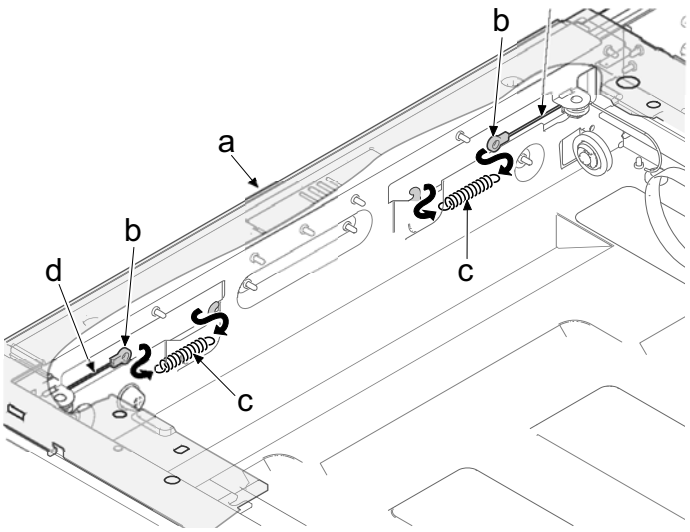

Attaching the scanner wires

1 Insert the small ball (a) on the scanner wire into the hole in the scanner wire drum (b).

2 Wind the scanner wires (c) three turns inward and five turns outward.

- Shorter from small ball of the scanner wire is wound to come outside.
- Use the gray wire for the machine front side and black wire for the machine rear side.

3 Secure the scanner wires (c) using the scanner wire stoppers (d).

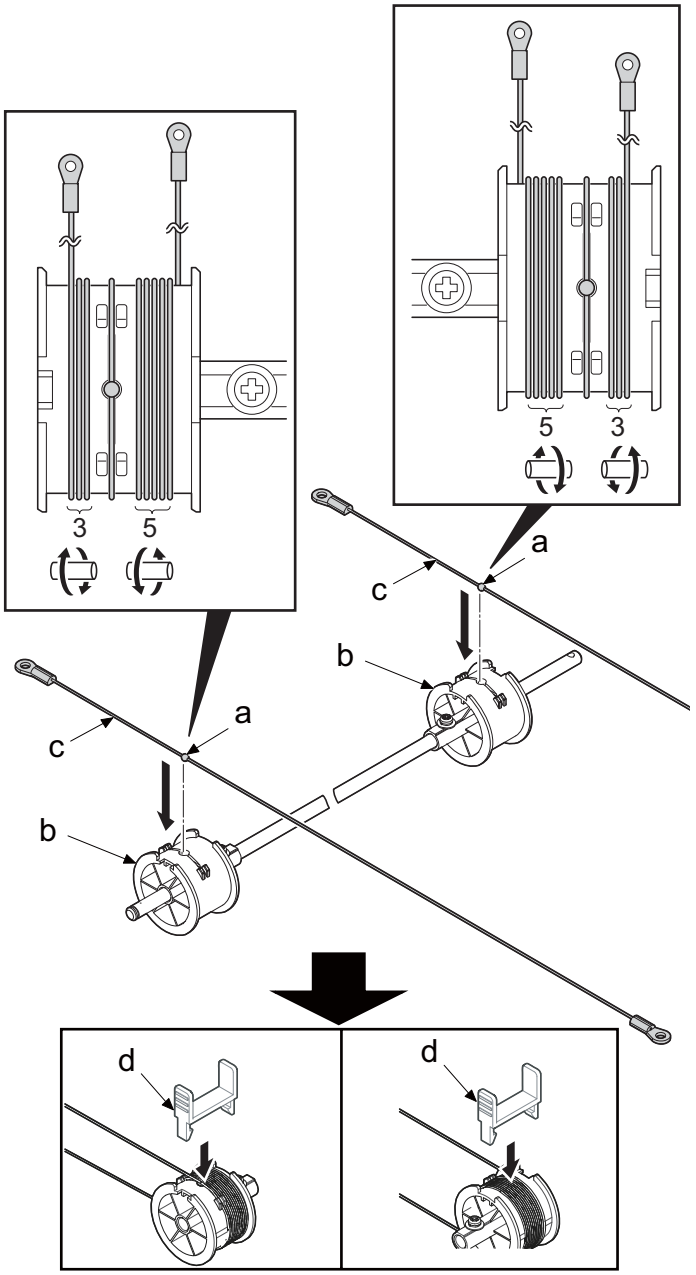

4 Move the mirror frame B (a) as shown in the figure and insert two frame securing tools (c) into the positioning holes (b) at the front and rear of the machine center to fix the mirror frame B (a) in position.

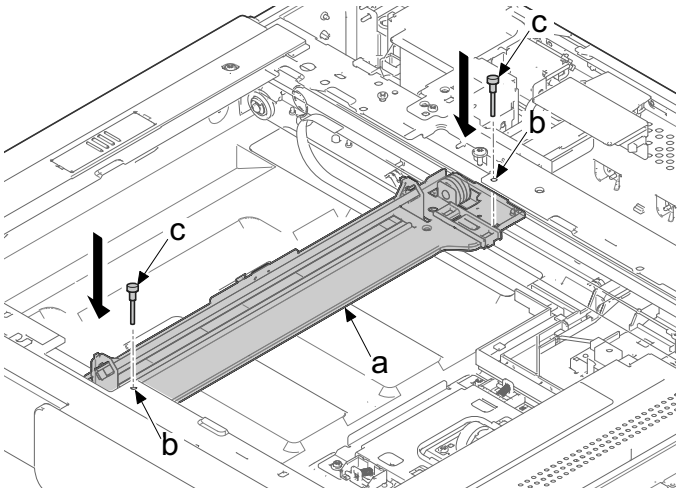

Attach the wire

1 Wind the outer scanner wires (a) around the outside grooves in the pulleys (b) of the mirror frame B from above to below.

- The scanners wires pass the outside of positioning pin.

2 Hook the round terminals (c) to the catches (d) inside the scanner unit.

3 Wind the inner scanner wires (e) around the grooves in the pulleys (f) at the left of the scanner unit from below to above.

- The scanner wires pass the lower side of mirror frame B (j).

4 Wind the scanner wires around the inside grooves in the pulleys (b) of the mirror frame B from below to above.

5 Wind it around the pulley (g).

6 Hook the round terminals (h) to the scanner wire springs (i).

7 Apply the steps 1 through 6 to another scanner wires.

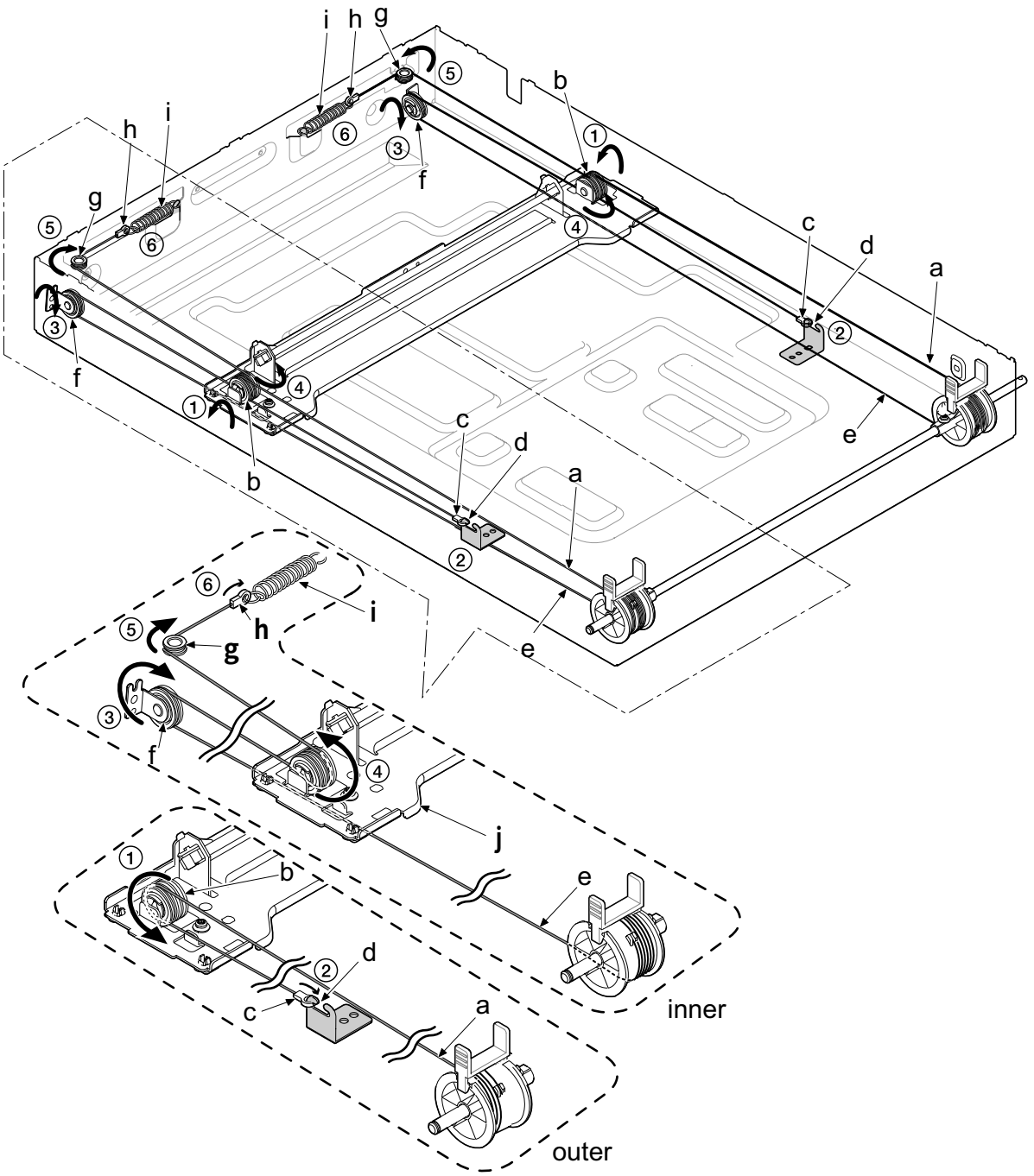

8 Detach the scanner wire stoppers and the mirror frame securing tools.

9 Align the scanner wires to the inside along with the small ball in the wire drum.

10 Move the mirror frame B (b) from side to side to make the wire smoothly.

11 Refit the mirror frame A (a) in the main unit.

12 Move the mirror frame A (a) and the mirror frame B (b) to the machine left, and insert two frame securing tools (d) into the positioning holes (c) at the front and rear of the scanner unit to secure the mirror frame A (a) and the mirror frame B (b) in position.

13 Attach the front wire holder plate (e) and rear wire holder plate (f) to the mirror frame A (a).

14 Detach the frame securing tools (d).

15 Reattach the lamp unit in the original position.

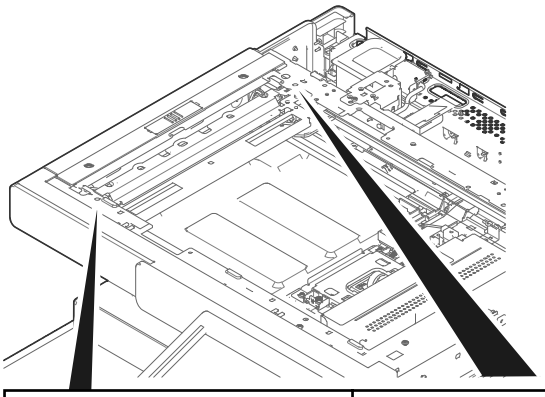

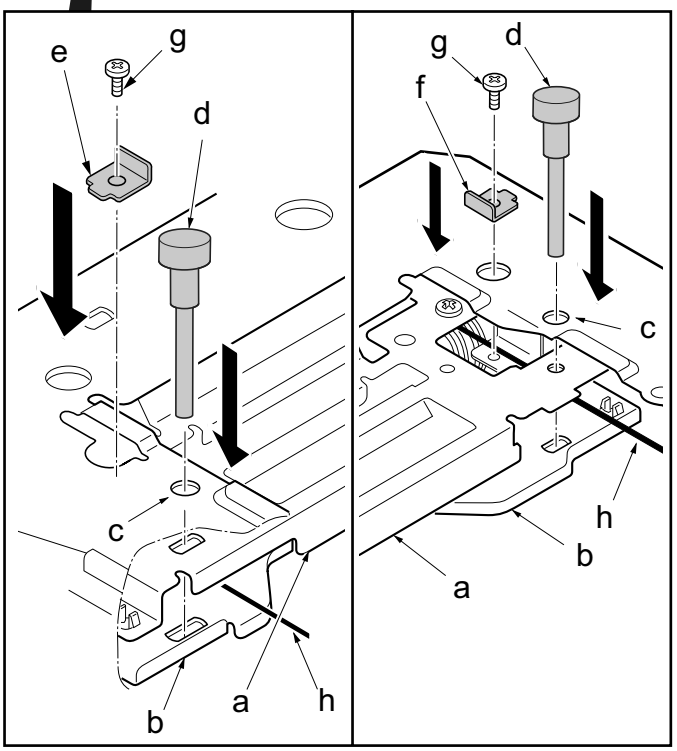

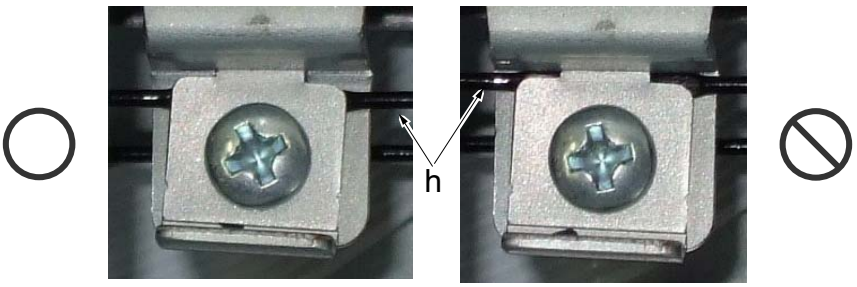

(3)Drive section

(3-1)Detaching and attaching the PF drive unit

1 Remove the screw (a) (M3x8).

2 Push down the rear lower cover (b), release the upper rib, and release the lower hook (c) lifting the cover. After that, remove it in the direction of the arrow.

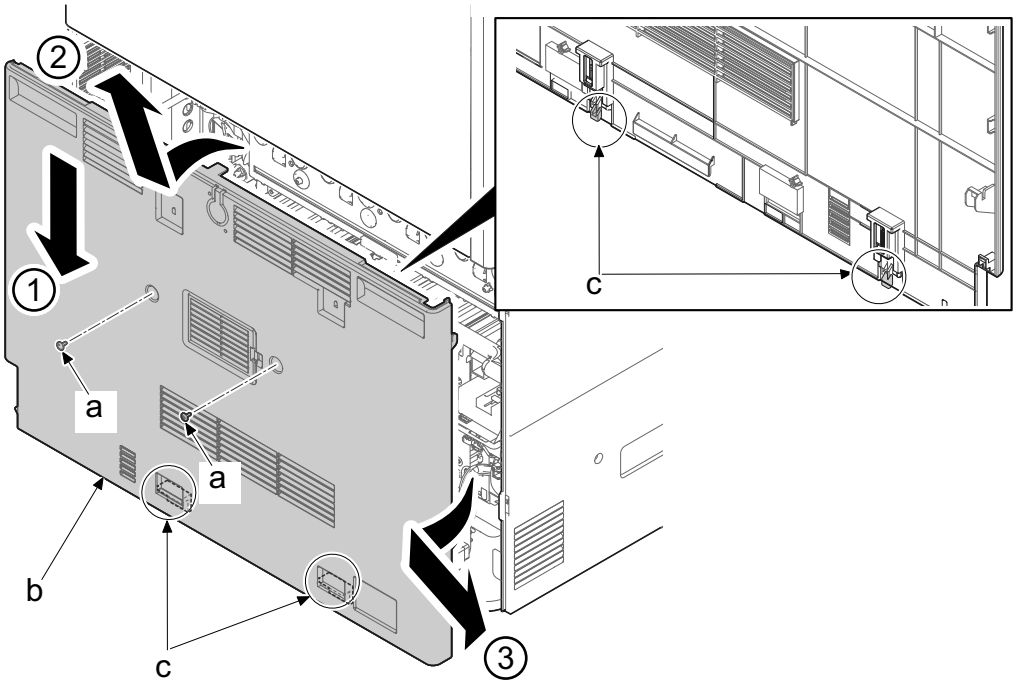

3 Remove eight connectors (b) from feed drive PWB (a).

4 Release the wire saddle (c) and remove the wire (d).

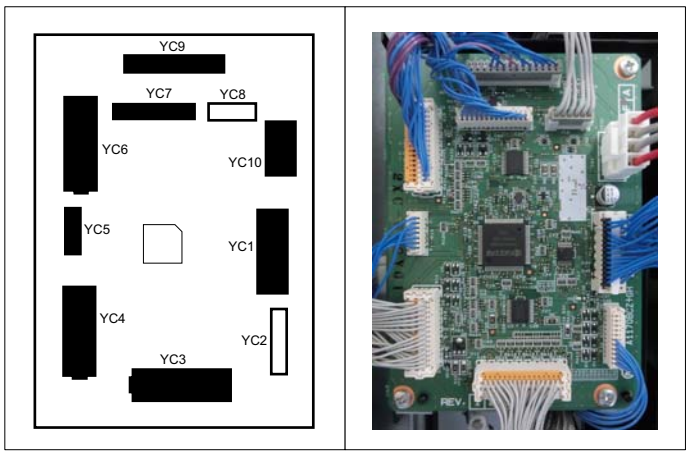

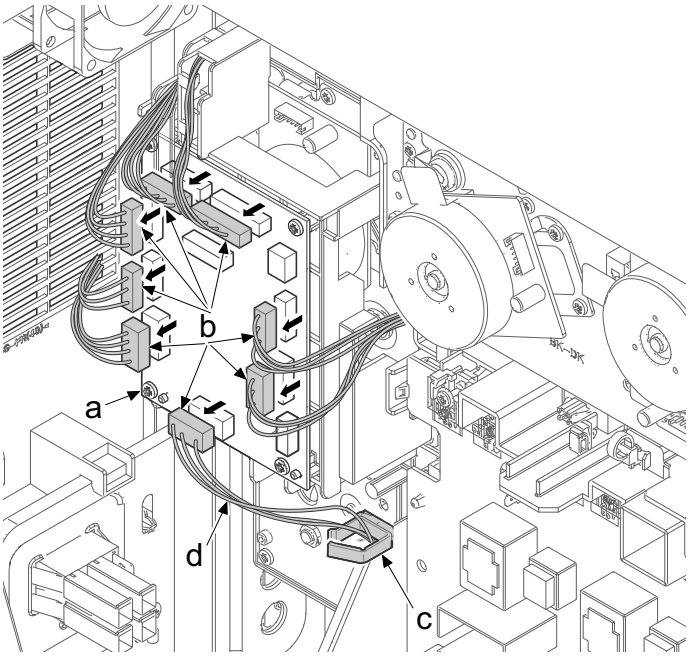

5 Remove five screws (a) (M3x8) and detach the feed drive unit (b).

6 Check the drive unit (b) and clean or replace it.

7 Reattach the parts in the original position.

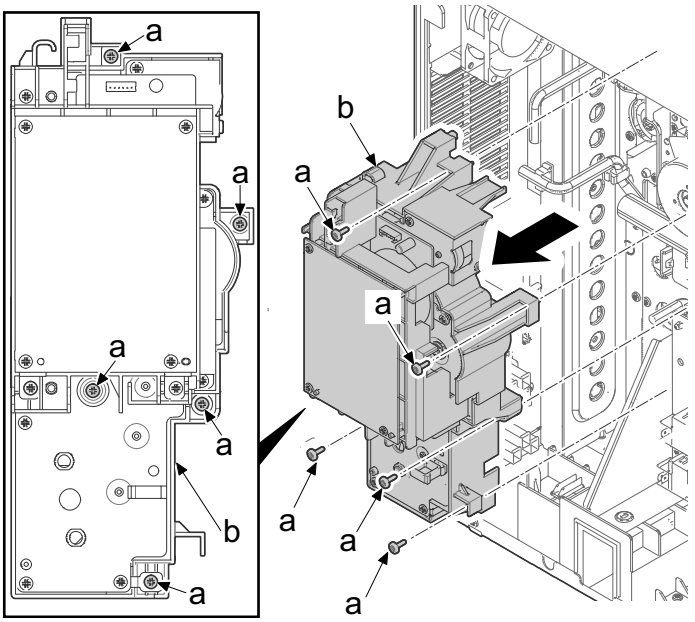

(3-2)Detaching and attaching the main drive unit

1 Remove a screw (a) (M3x10) and then remove the rear upper cover (b) by sliding in the direction of the arrow.

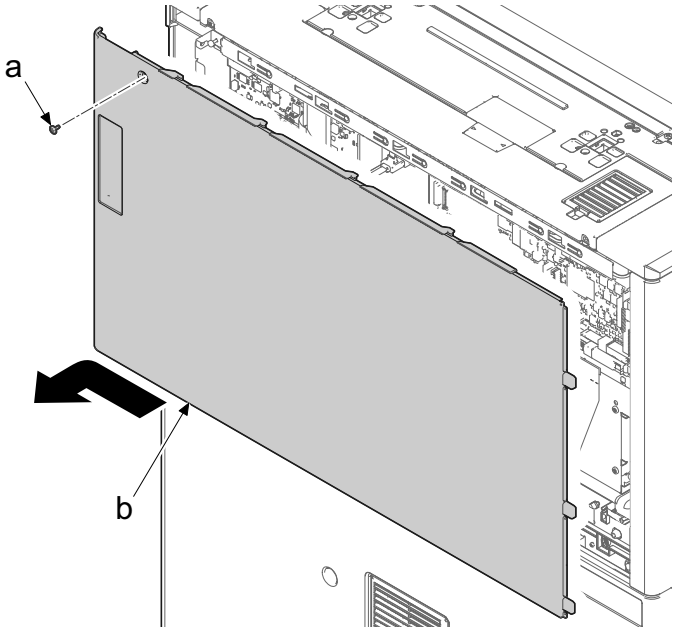

2 Remove the screw (a) (M3x8).

3 Push down the rear lower cover (b), release the upper rib, and release the lower hook (c) lifting the cover. After that, remove it in the direction of the arrow.

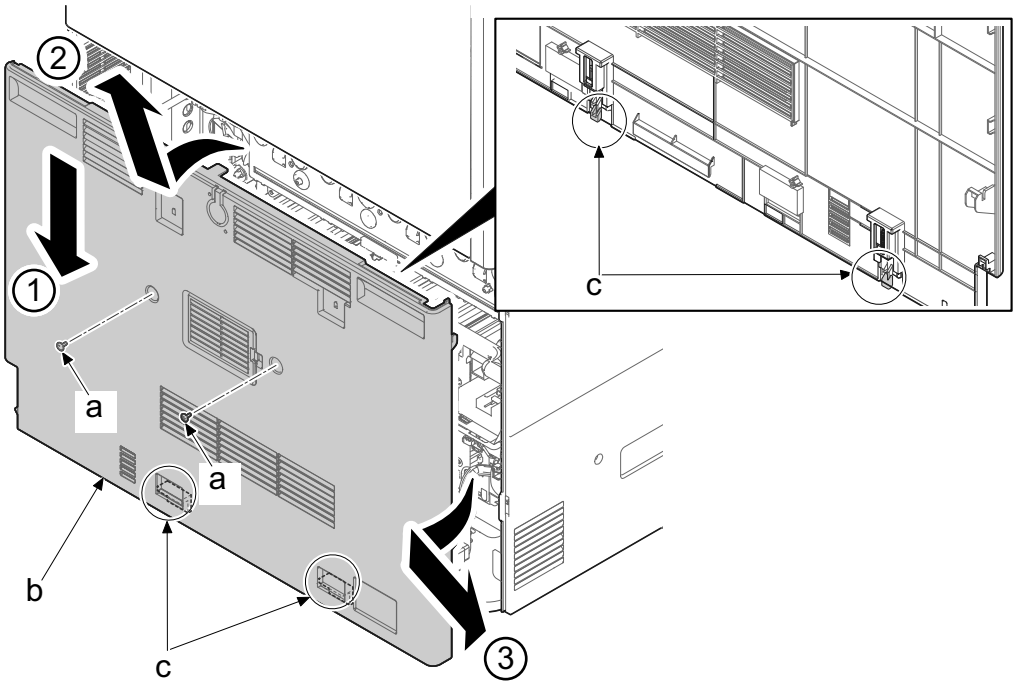

4 Remove 2 connectors (b) from feed drive PWB (a).

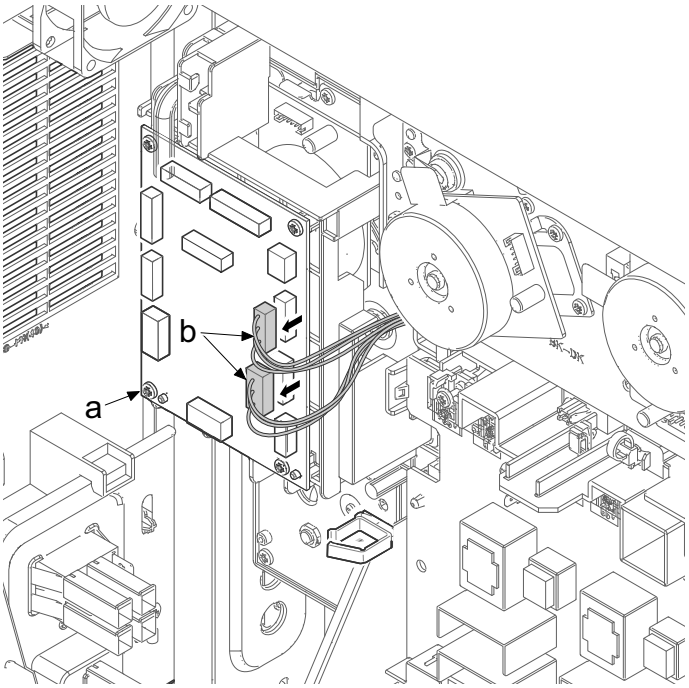

5 Release 4 wire saddles(a). Release the cable tie with a snap (b) and remove the wire (c).

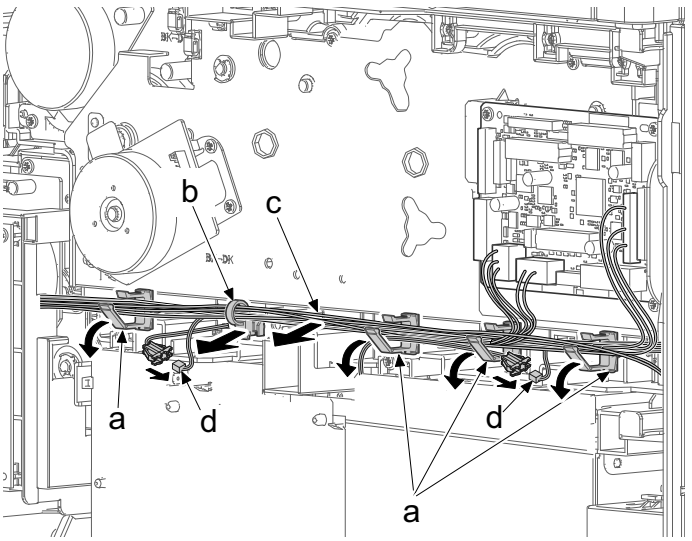

6 Remove 13 connectors (b) from feed drive PWB (a).

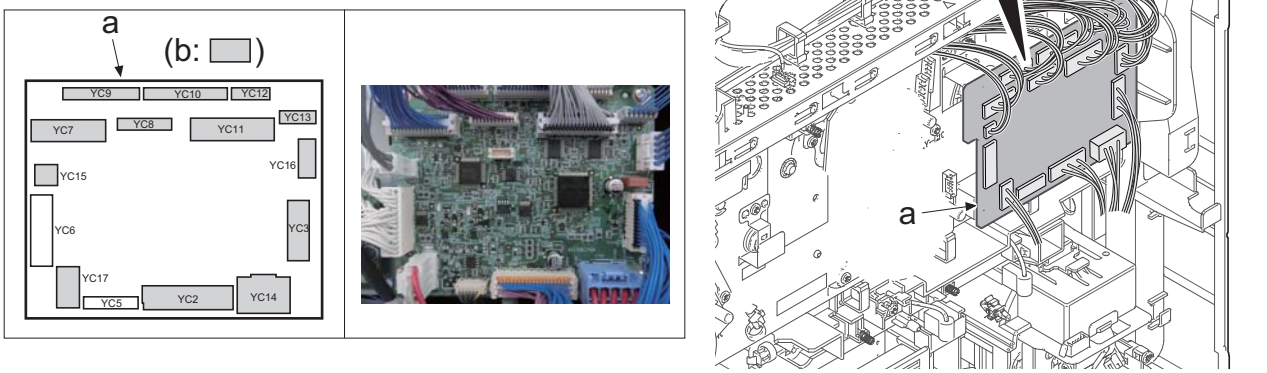

7 Release the cable tie with a snap (b) and remove the wire (c).

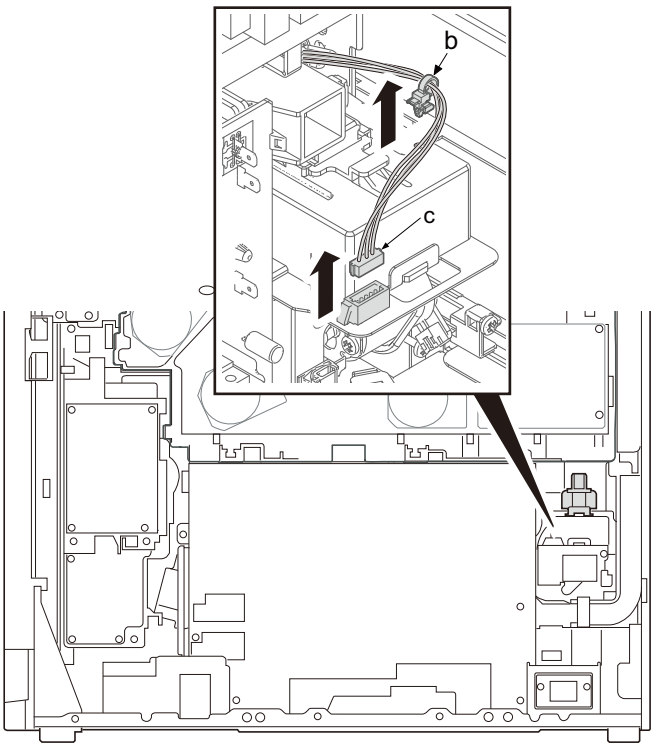

8 Hang the wires (a) on hook (b).

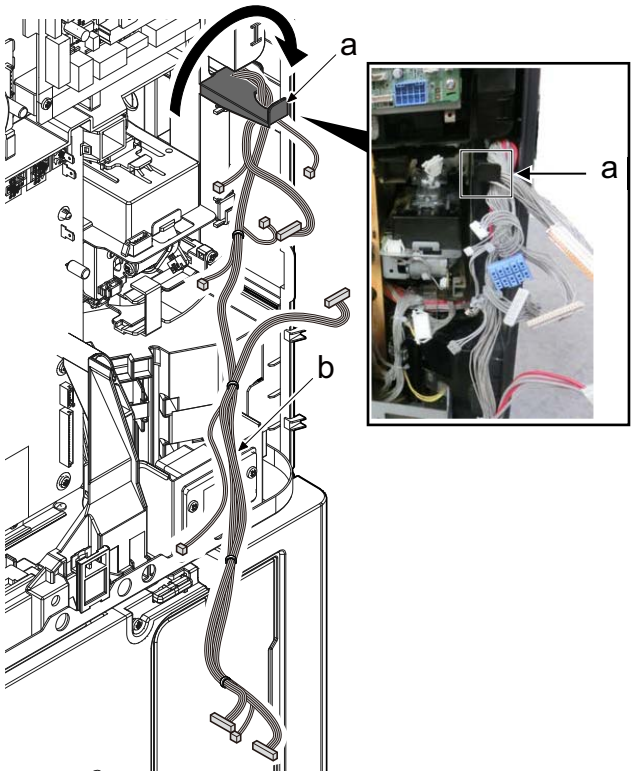

IMPORTANT

Cleaning spring for sensor in waste toner joint may have malfunction because of interference between wires and waste toner joint unless detach the drive unit without hanging the wires (b) on hook (a). This leads waste toner detection error or clogging up.

9 Push up the hook (b) of the waste toner joint (a) to release the stopper (c) and pull it out.

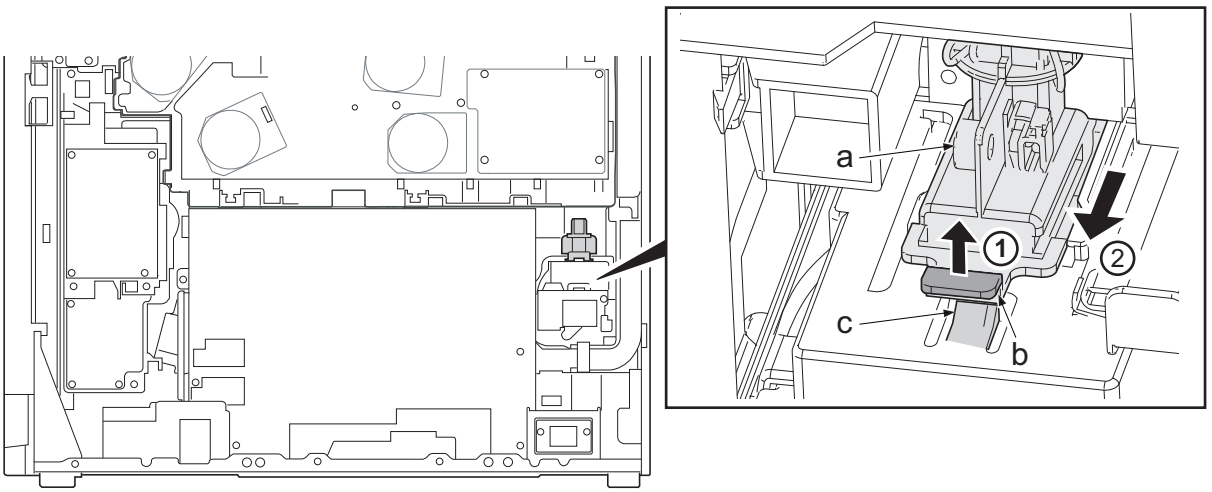

IMPORTANT

Cleaning spring for sensor in waste toner joint may have malfunction unless detach the drive unit without removing waste toner joint (a). This leads waste toner detection error.

Waste toner joint has to be released before take the main drive unit away.

10 Remove six screws (a) (M3x8) and detach the main drive unit (b).

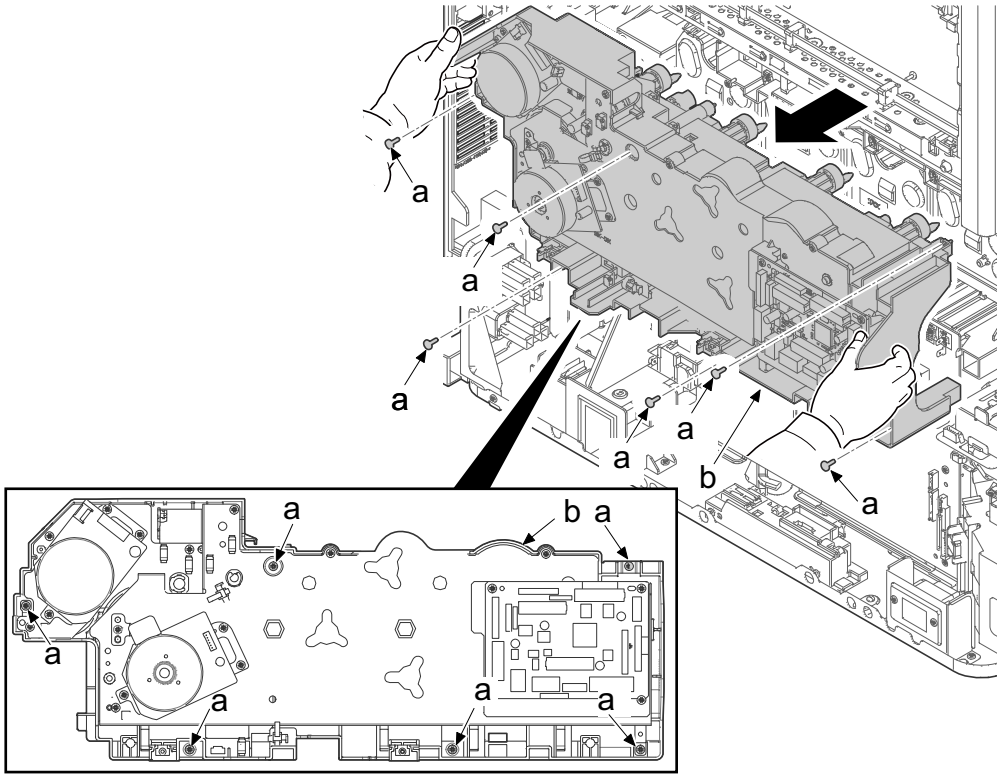

Detach waste toner convey unit

11 Remove three screws (a) (M3x8).

12 Release 4 hooks (b) and take the waste toner convey unit (c) away.

13 Check the waste toner convey unit (c) and clean or replace it.

14 Check the main drive unit (d) and clean or replace it.

15 Reattach the parts in the original position.

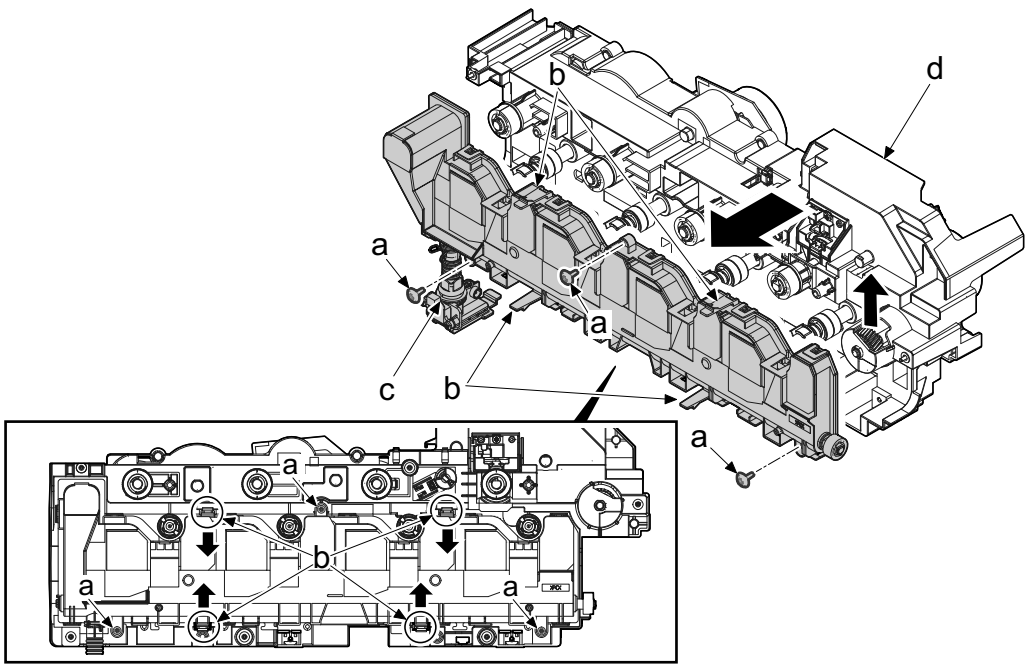

(3-3)Detaching and attaching the container motor

1 Remove a screw (a) (M3x10) and then remove the rear upper cover (b) by sliding in the direction of the arrow.

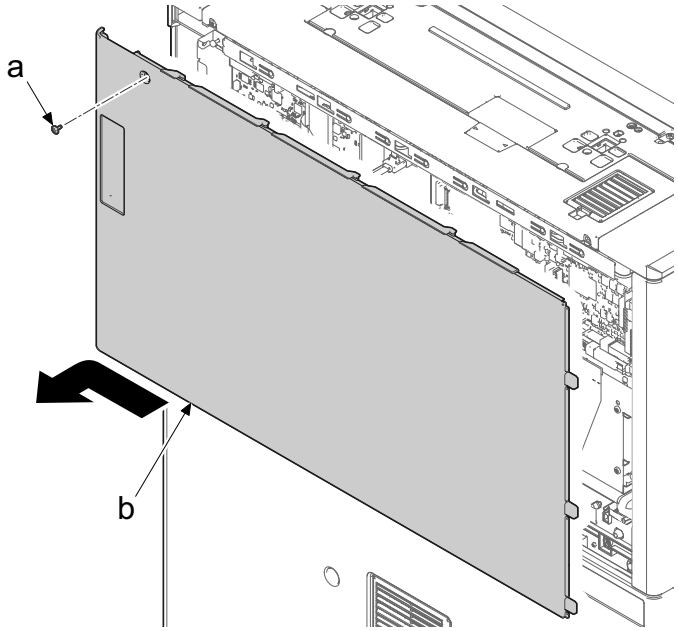

2 If DP are mounted, Open it.

3 Remove two screws (a) (M3x8).

4 Remove the DP rear cover (b) in the direction of the arrow.

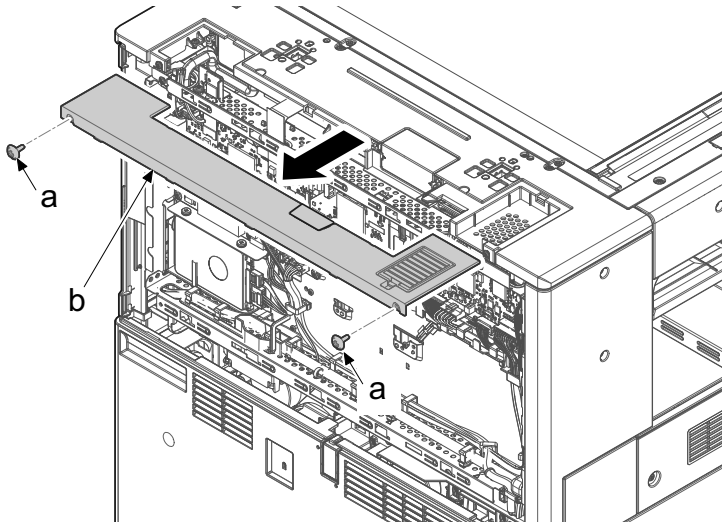

5 Remove two screws (a) (M3x8).

6 Release two hooks (c) and remove the left rear cover (b) in the direction of the arrow.

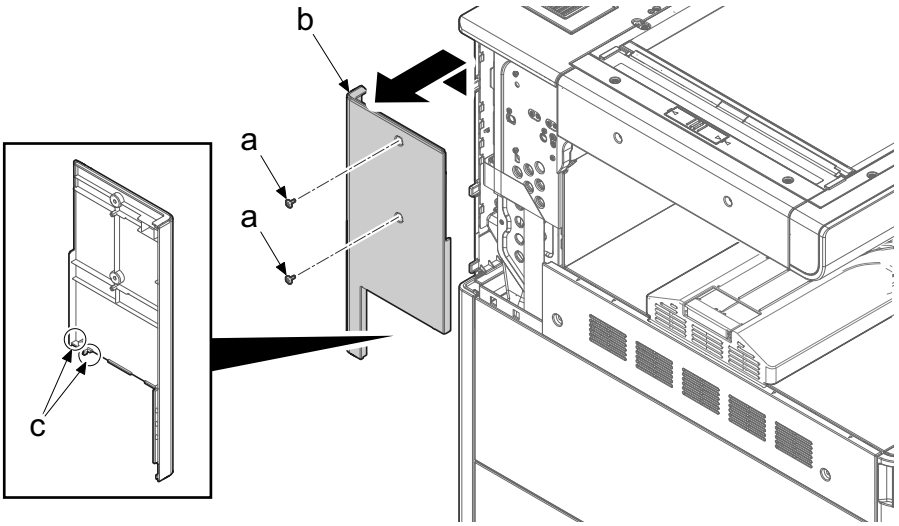

7 Open the right cover (a) of the main unit (b).

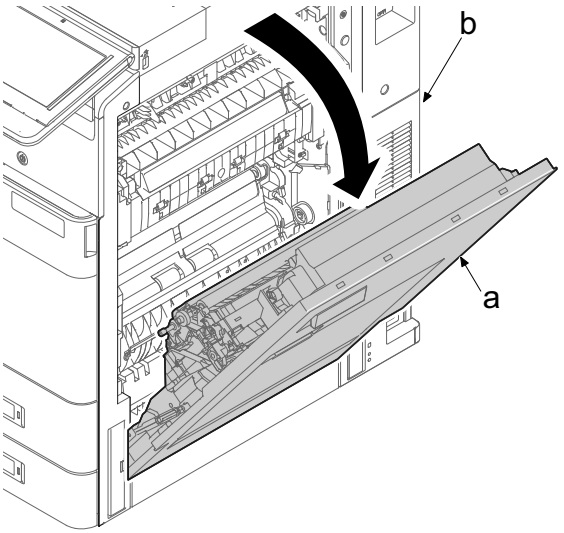

8 Remove two screws (a) (M3x8).

9 Release the hooks (b) and remove the right rear top cover (c).

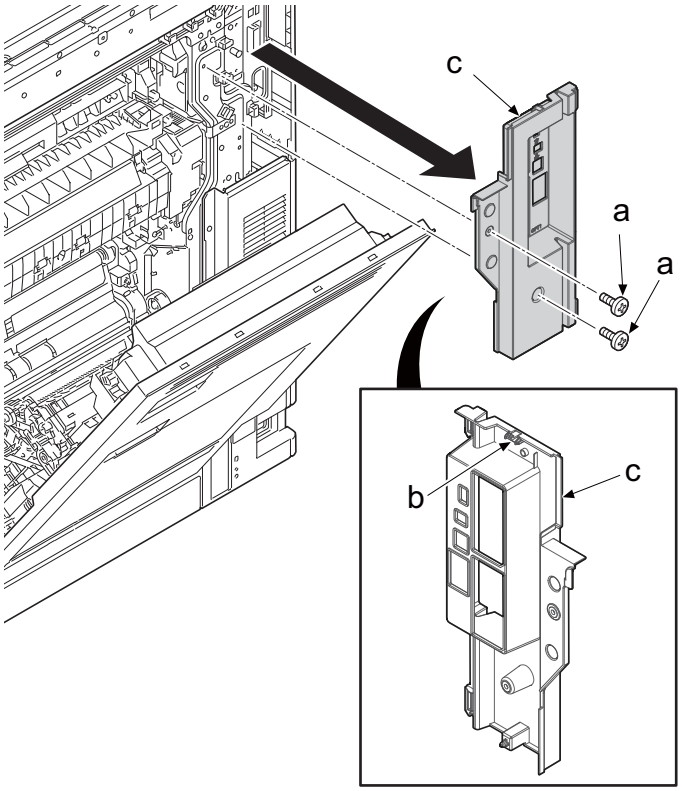

10 Release four connectors (b) from the main PWB (a) and withdraw from the aperture (e). Remove the wire (c) from two wire saddles (d).

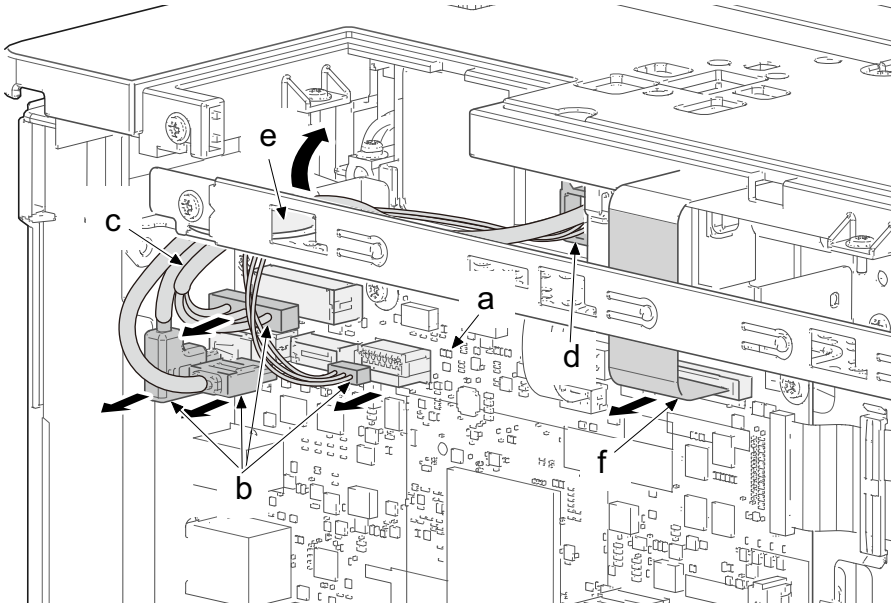

11 Disconnect the FFC and the connector from the engine PWB.

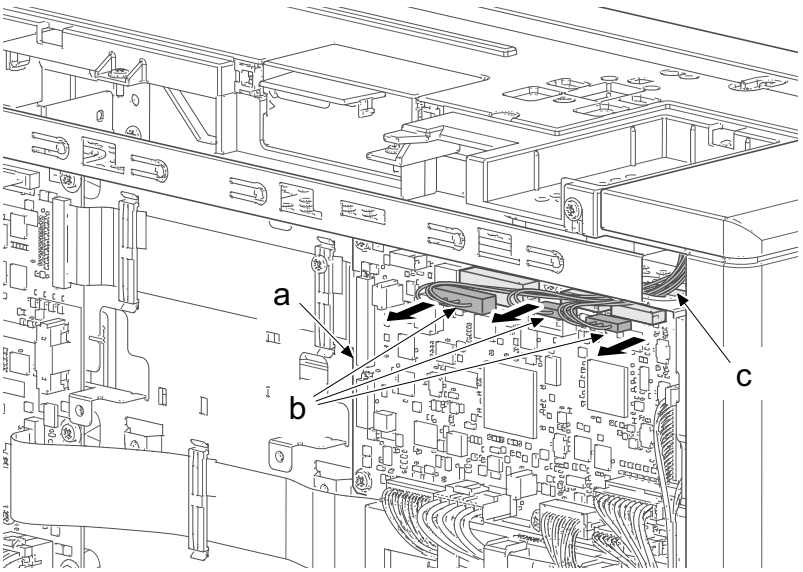

12 Remove two screws (a) (M3x8).

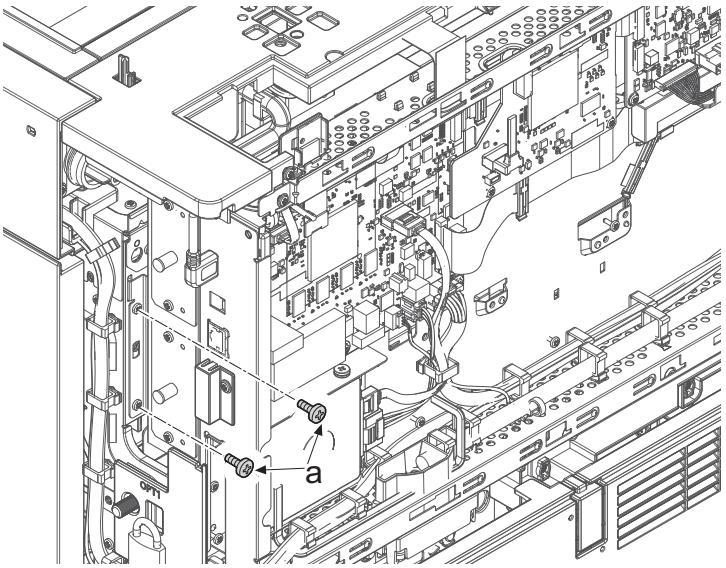

13 Lifting and pulling the shield box (a) then release the hooks (b).

14 Open the shield box (a).

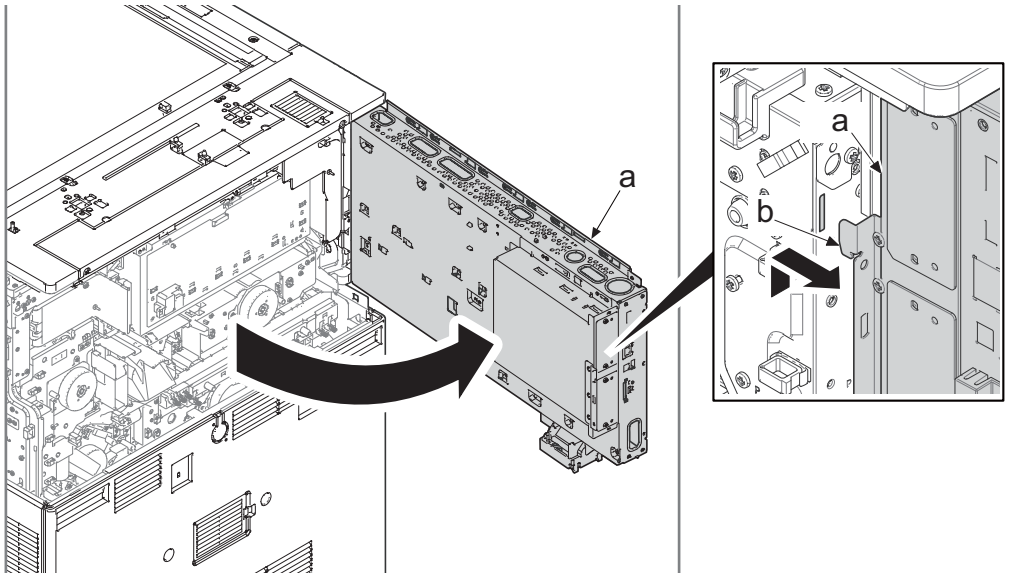

CAUTION

In case of operating at the rear lower side of the machine opening the shield box, pay attention not to hit your head to the shield box.

15 Remove the connector (b) from the container motor (a).

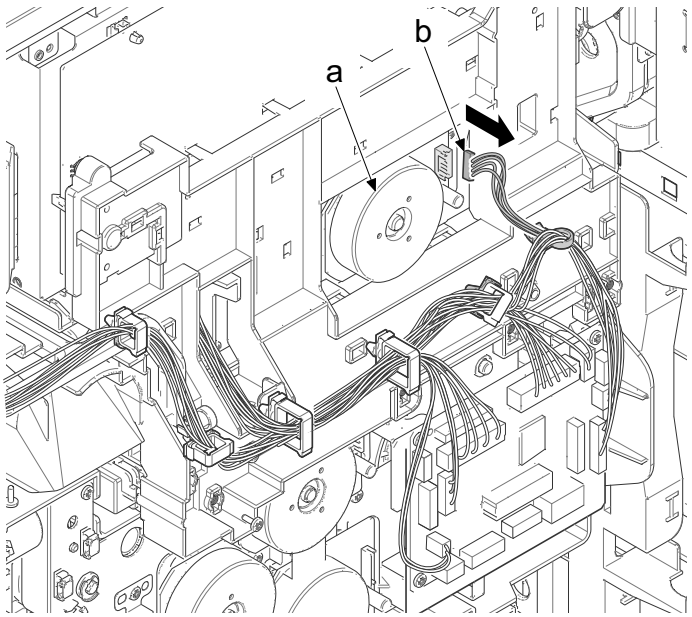

16 Remove three screws (a) (M3x8) and then remove the container motor assembly (b)

17 Check the container motor assembly (b) and clean or replace it.

18 Reattach the parts in the original position.

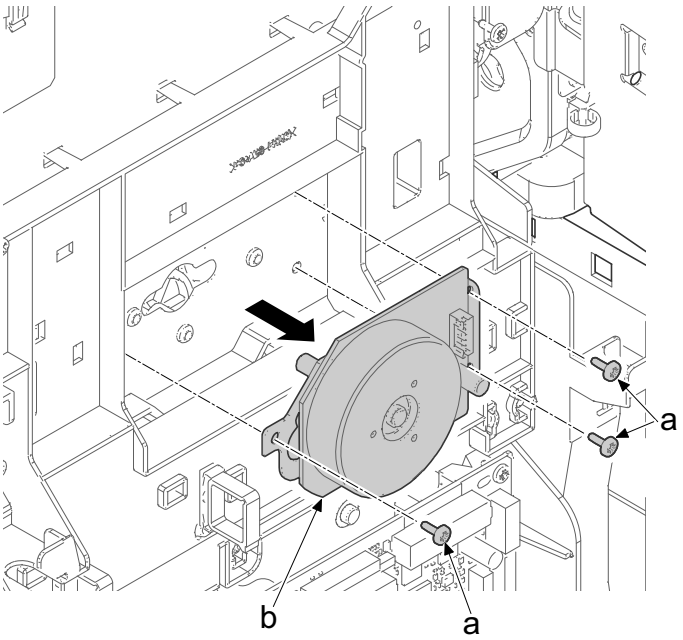

(3-4)Detaching and attaching the toner supply drive unit

1 Remove a screw (a) (M3x10) and then remove the rear upper cover (b) by sliding in the direction of the arrow.

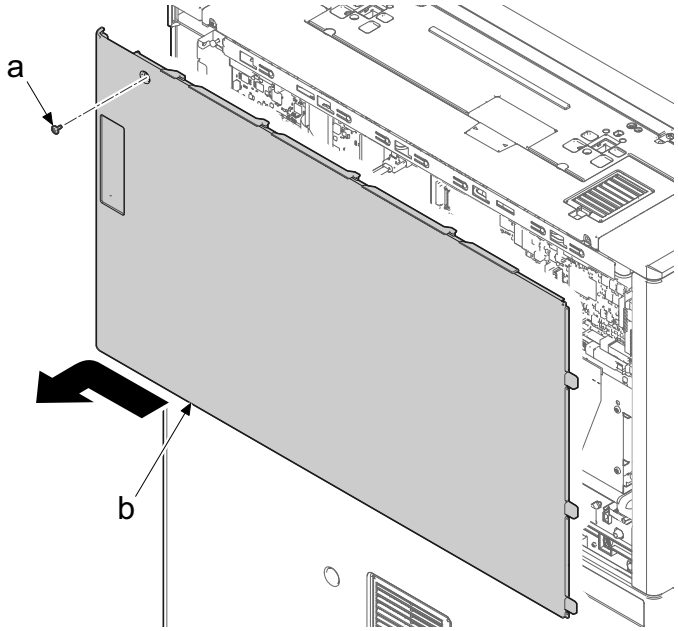

2 Remove two screws (a) (M3x10).

3 Push down the rear lower cover (b), release the upper rib, lift in slightly opened state and release the lower hook (c). After that, remove it in the direction of the arrow.

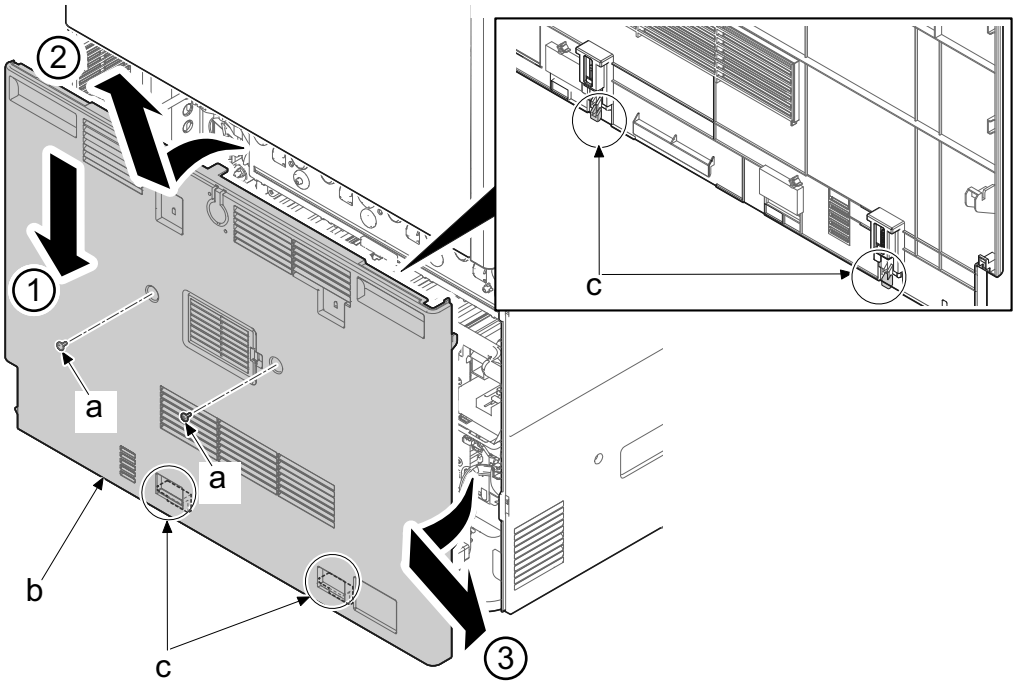

4 Release four connectors (b) from the main PWB (a) and withdraw from the aperture (e). Remove the wire (c) from two wire saddles (d).

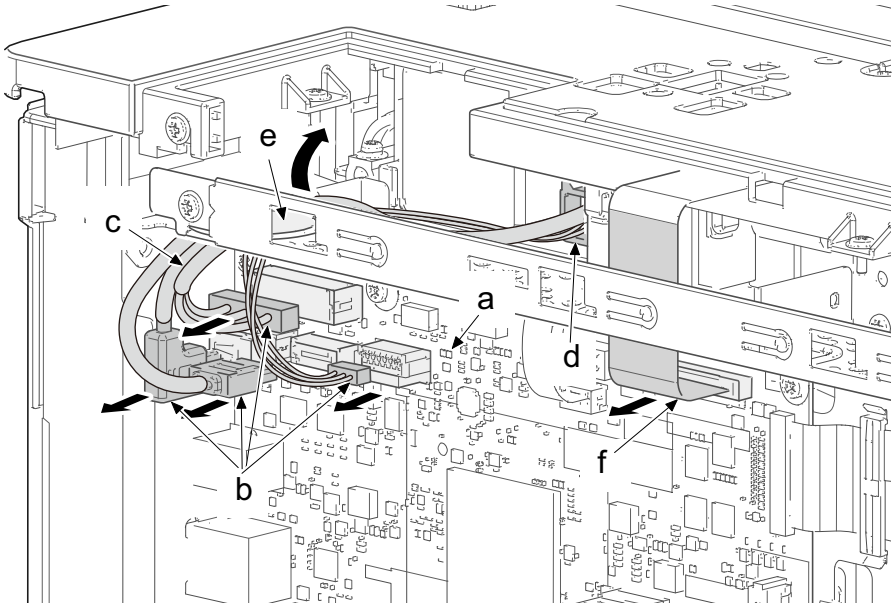

5 Disconnect the FFC and the connector from the engine PWB.

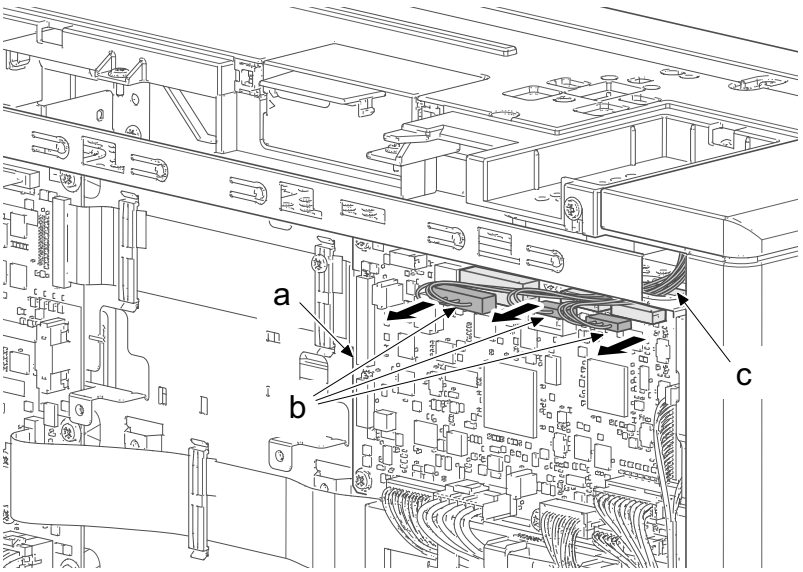

6 Remove two screws (a) (M3x8).

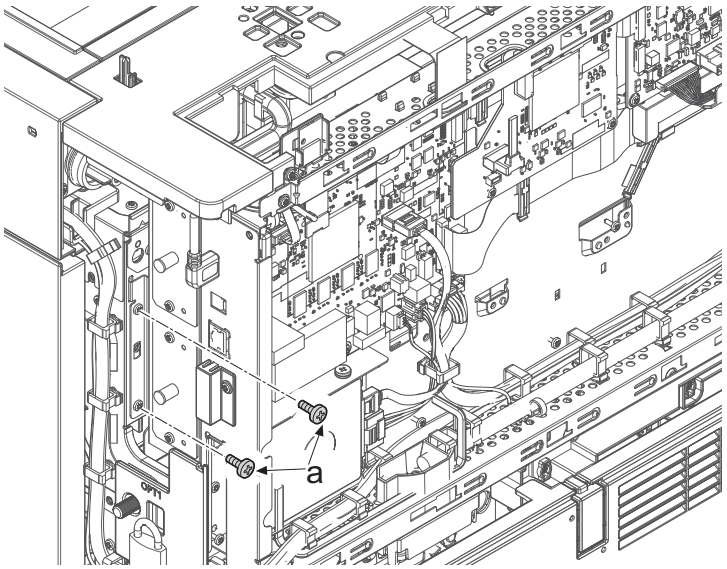

7 Lifting and pulling the shield box (a) then release the hooks (b).

8 Open the shield box (a).

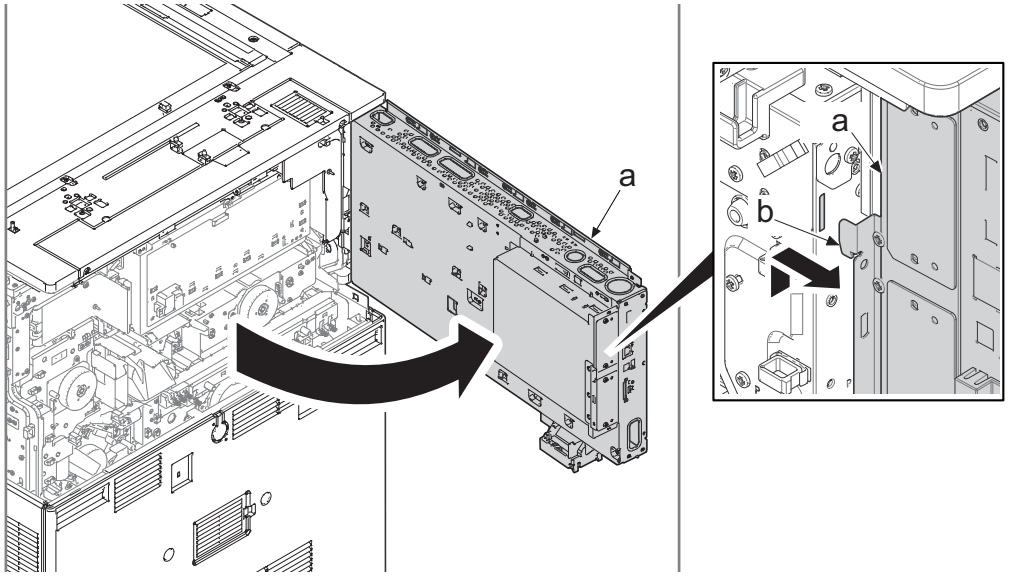

CAUTION

In case of operating at the rear lower side of the machine opening the shield box, pay attention not to hit your head to the shield box.

9 Remove the connector (b) from the container motor (a). Remove ten connectors (d) from image drive PWB (c).

10 Remove the wire (e) from the five wire saddles (f).

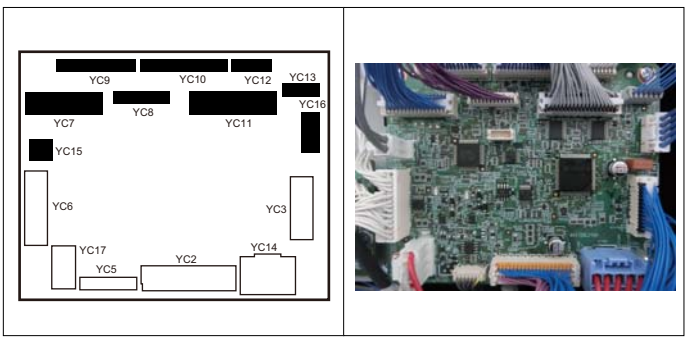

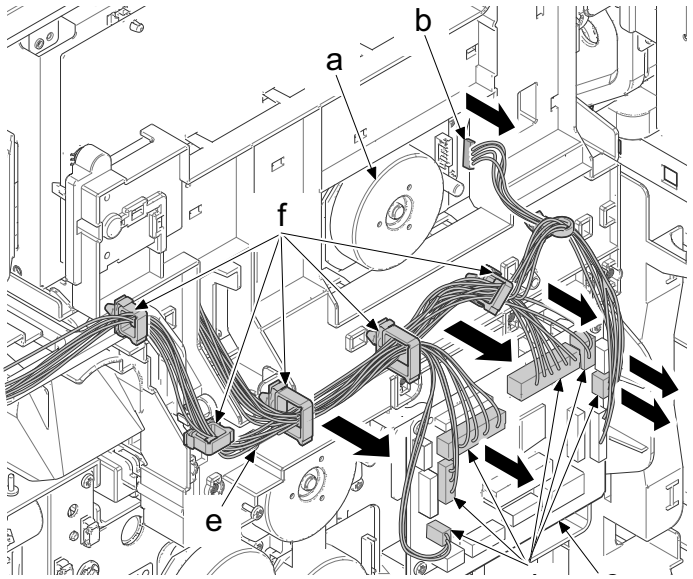

11 Remove two screws (a) (M3x8).

12 Unlatch six upper side hooks (c) with a flat-blade screwdriver (b) and then four lower side hooks (c), and then remove the transfer terminal cover (d).

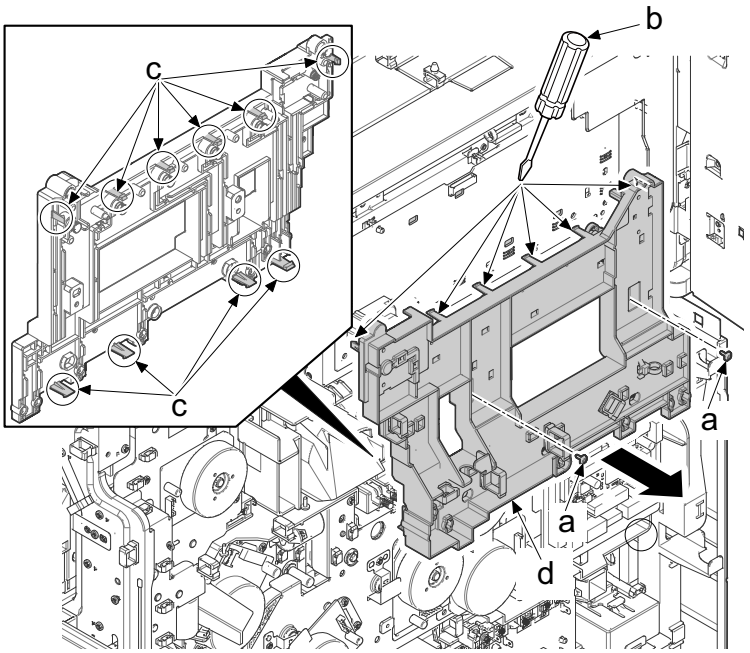

IMPORTANT

When attaching the transfer terminal cover (a), make sure that the rib (b) is between two terminals. (Eight locations)

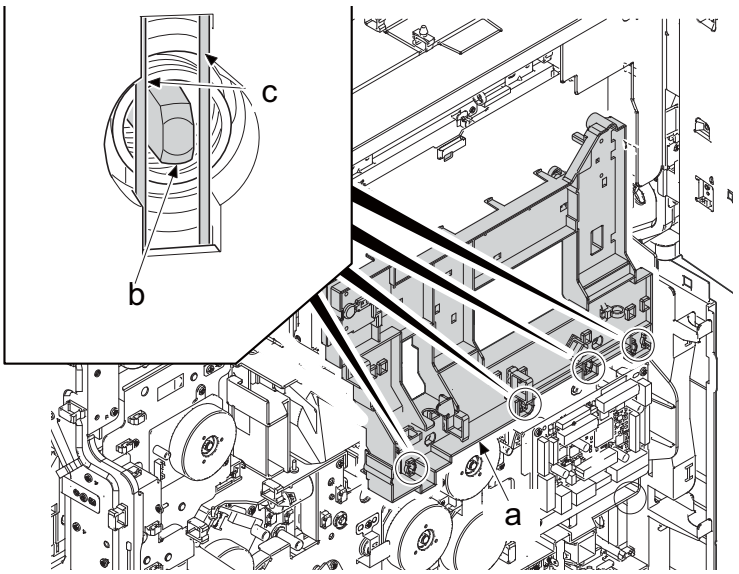

13 Remove three connectors (b) from feed drive PWB (a).

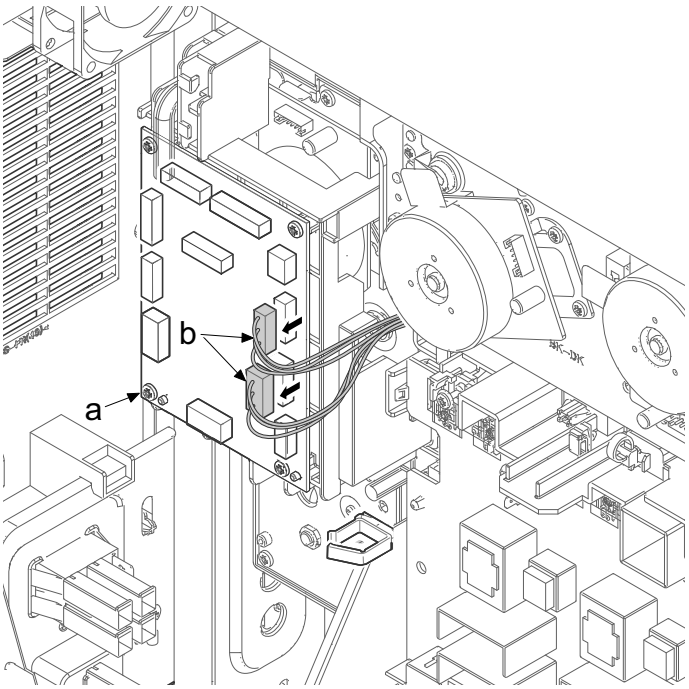

14 Disconnect two connectors (d). Release four wire saddles(a). Release the cable tie with a snap (b) and remove the wire (c).

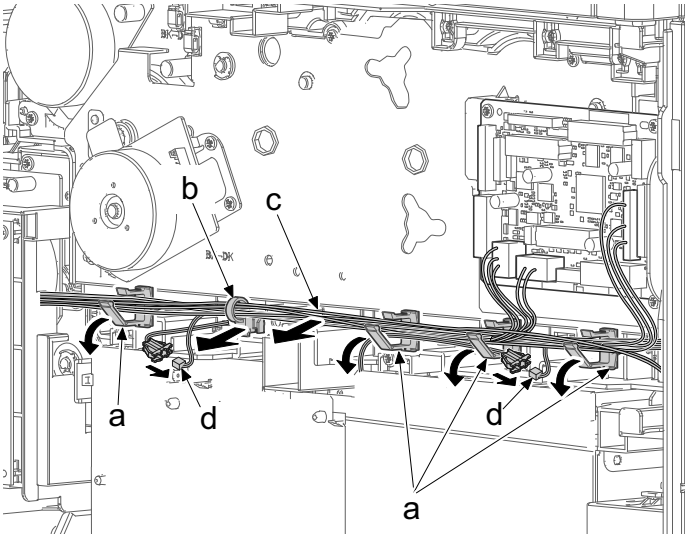

15 Remove sixteen connectors (b) from feed drive PWB (a).

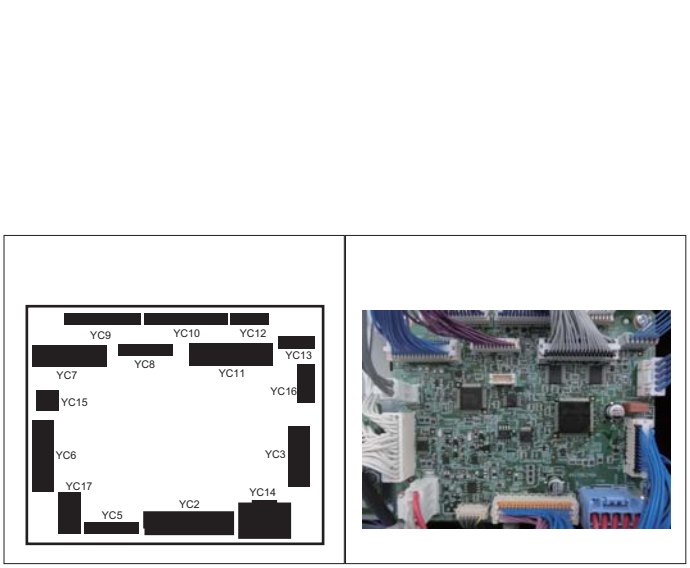

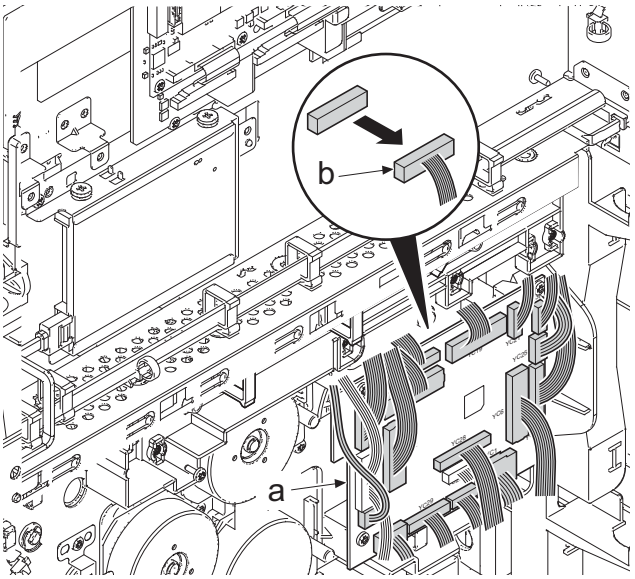

16 Release the cable tie with a snap (b) and remove the wire (c).

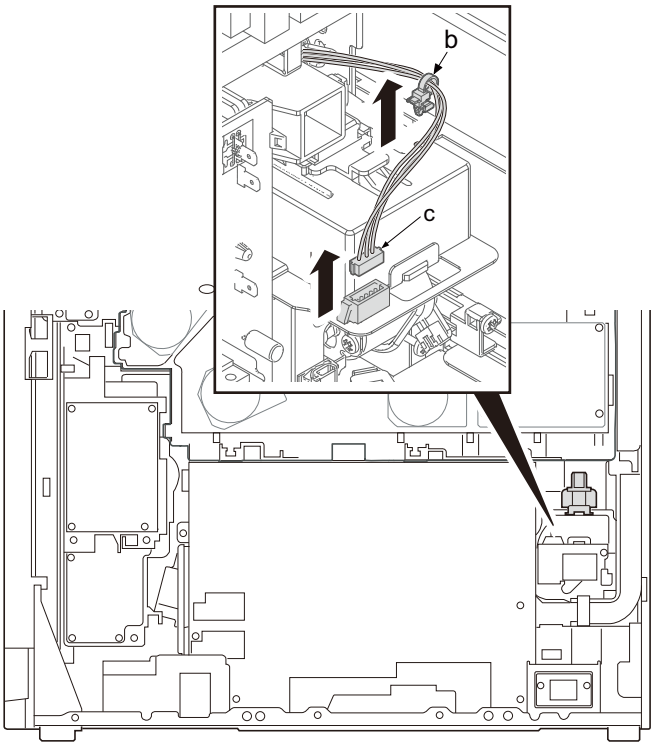

17 Hang the wires (a) on hook (b).

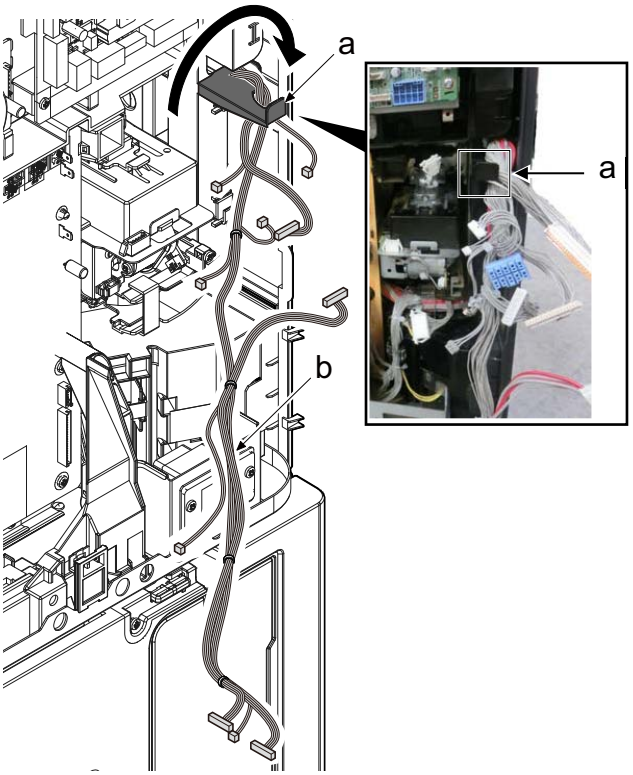

IMPORTANT

Cleaning spring for sensor in waste toner joint may have malfunction because of interference between wires and waste toner joint unless detach the drive unit without hanging the wires (b) on hook (a). This leads waste toner detection error or clogging up.

18 Push up the hook (b) of the waste toner joint (a) to release the stopper (c) and pull it out.

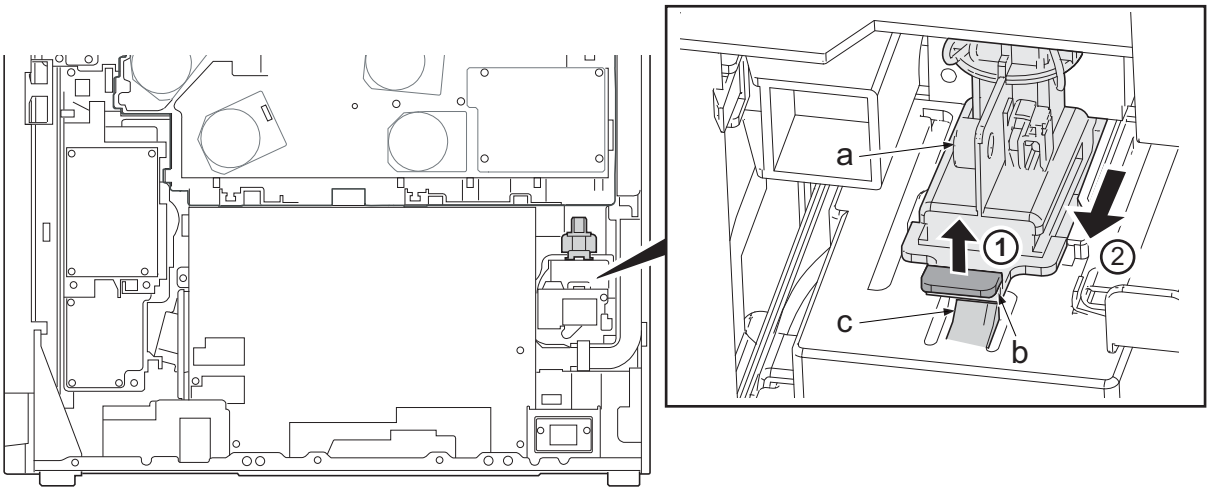

IMPORTANT

Cleaning spring for sensor in waste toner joint may have malfunction unless detach the drive unit without removing waste toner joint (a). This leads waste toner detection error.

Waste toner joint has to be released before take the main drive unit away.

19 Remove six screws (a) (M3x8) and detach the main drive unit (b).

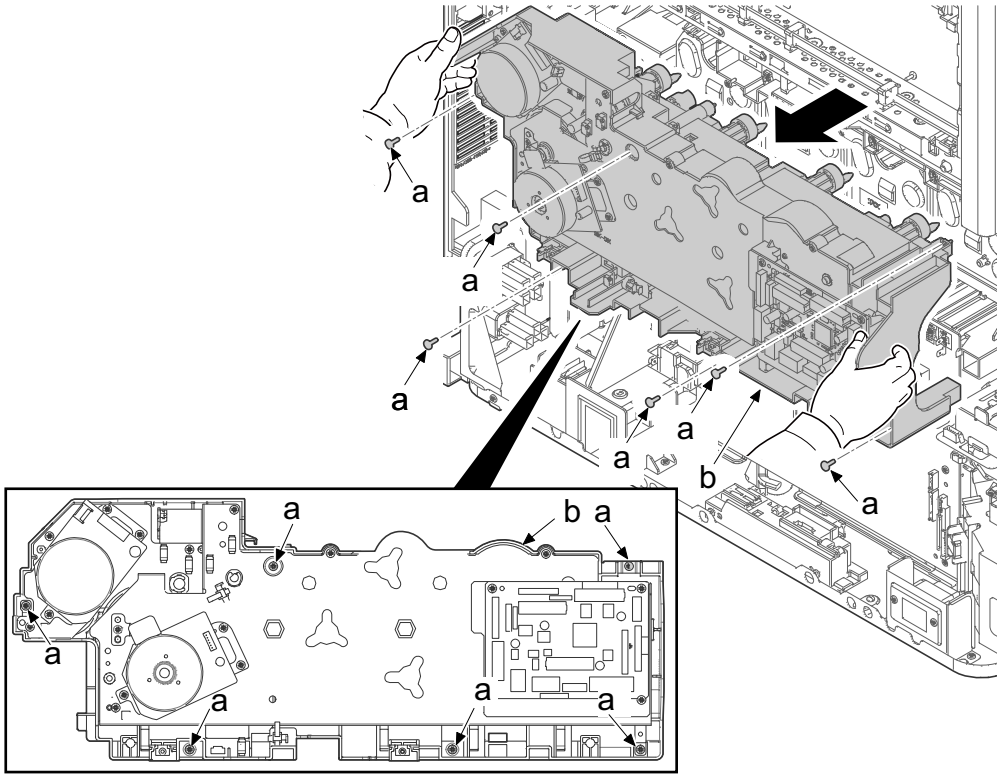

20 Widen two each hooks (a) and unlatch the hook (b), and then pull out the joint (c) of the toner supply drive unit to remove it.

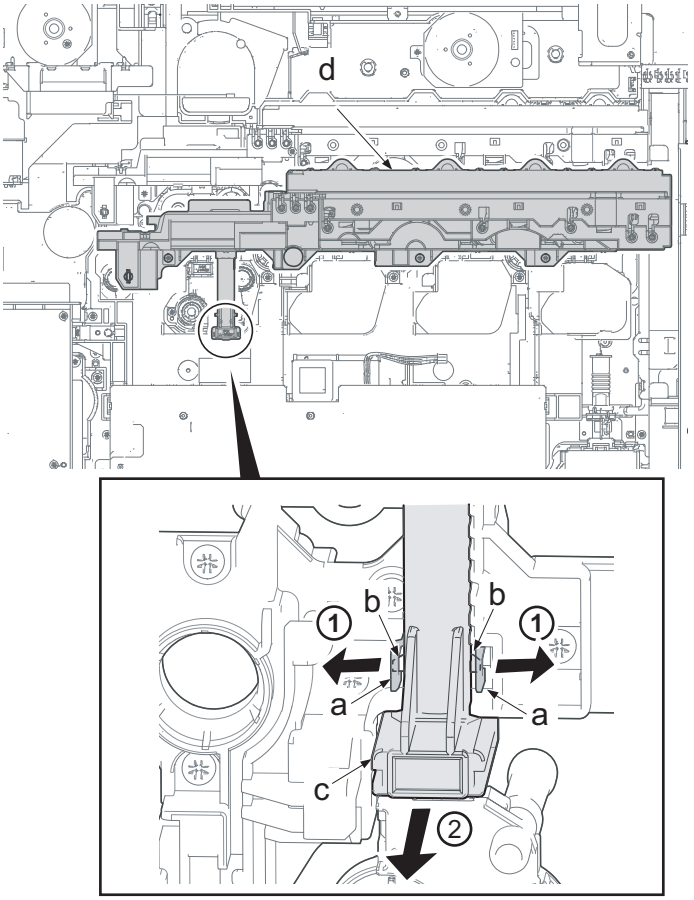

21 Remove three screws (a) (M3x8) and remove the toner supply drive unit (b).

22 Check the toner supply drive unit (b) and clean or replace it.

23 Reattach the parts in the original position.

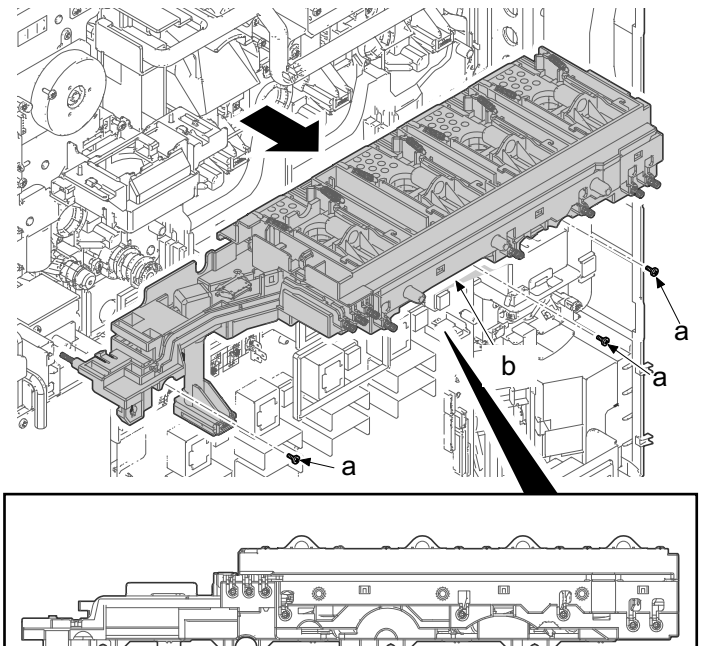

(3-5)Detaching and attaching the fuser drive unit

1 Remove a screw (a) (M3x10) and then remove the rear upper cover (b) by sliding in the direction of the arrow.

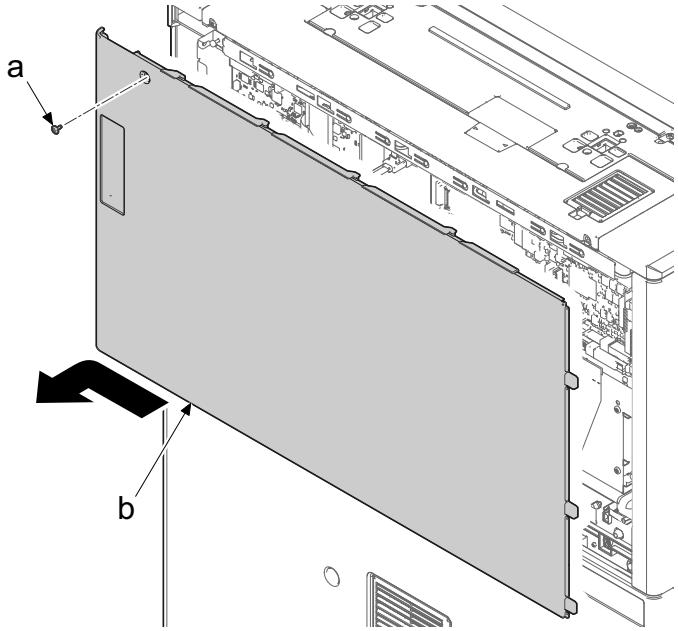

2 Remove two screws (a) (M3x10).

3 Push down the rear lower cover (b), release the upper rib, lift in slightly opened state and release the lower hook (c). After that, remove it in the direction of the arrow.

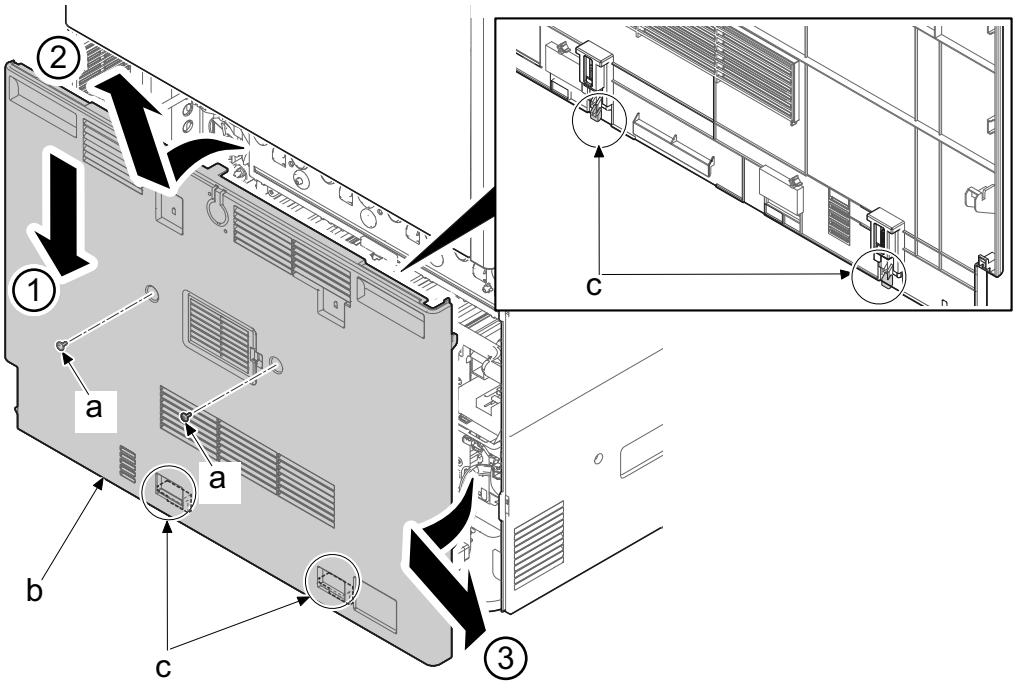

4 If DP are mounted, Open it.

5 Remove two screws (a) (M3x8).

6 Remove the DP rear cover (b) in the direction of the arrow.

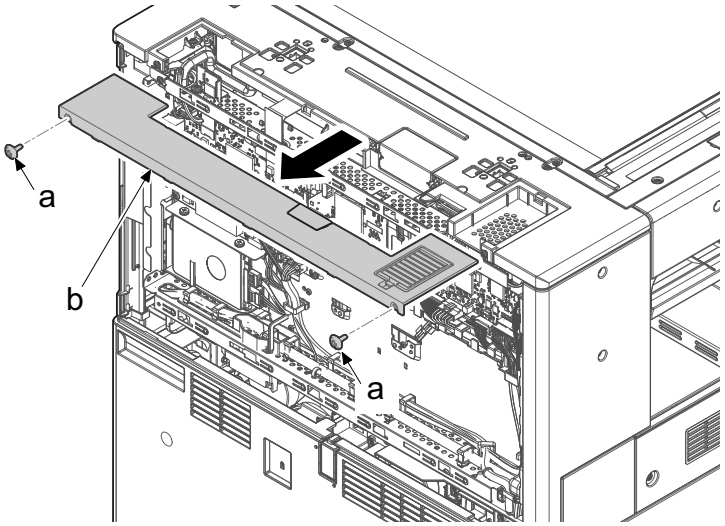

7 Remove two screws (a) (M3x8).

8 Release two hooks (c) and remove the left rear cover (b) in the direction of the arrow.

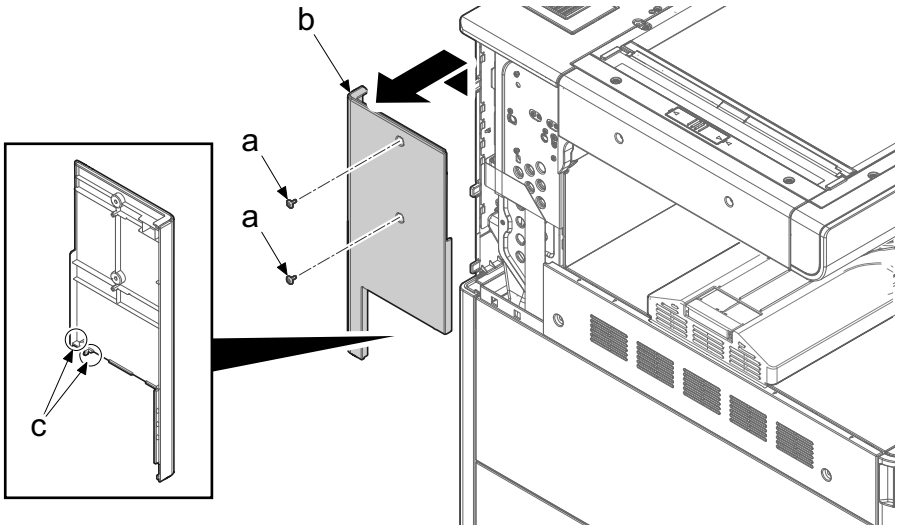

9 Open the right cover (a) of the main unit (b).

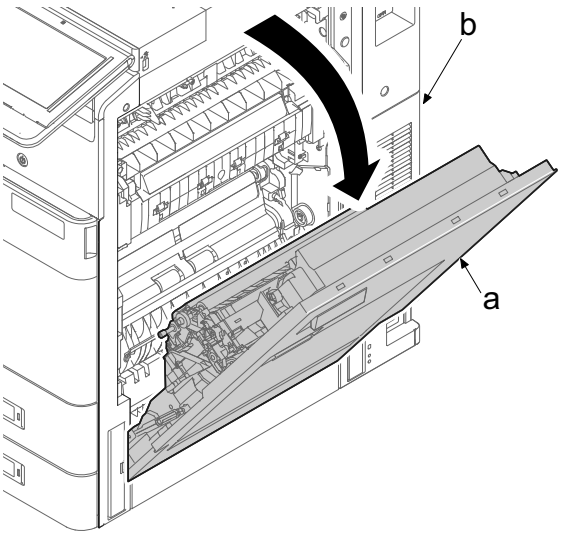

10 Remove two screws (a) (M3x8).

11 Release the hooks (b) and remove the right rear top cover (c).

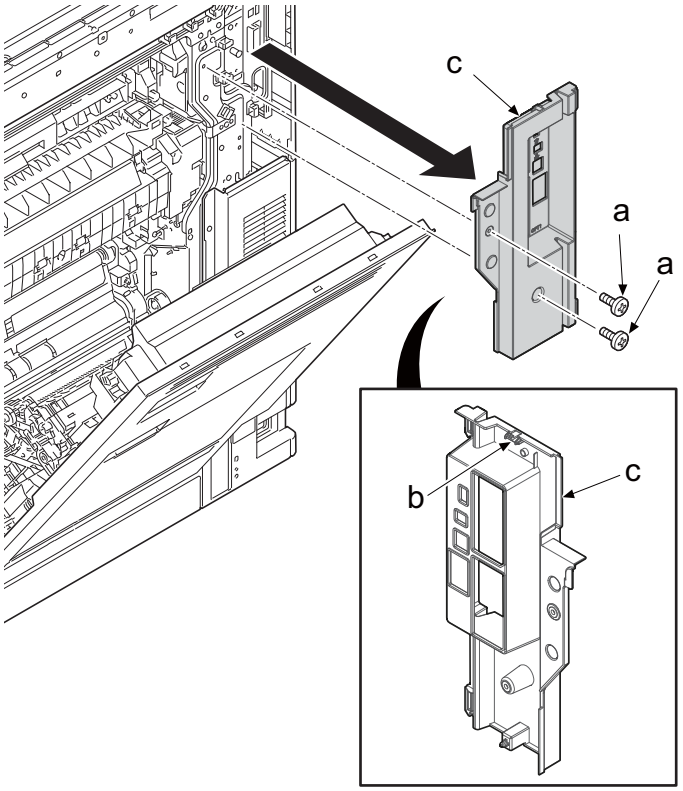

12 Release four connectors (b) from the main PWB (a) and withdraw from the aperture (e). Remove the wire (c) from two wire saddles (d).

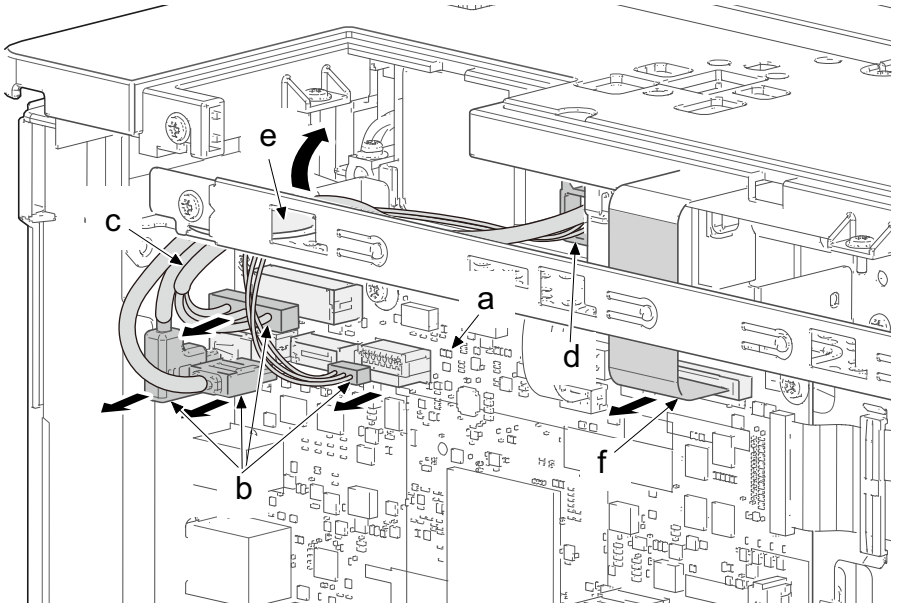

13 Disconnect the FFC (b) and the connector (c) from the engine PWB (a).

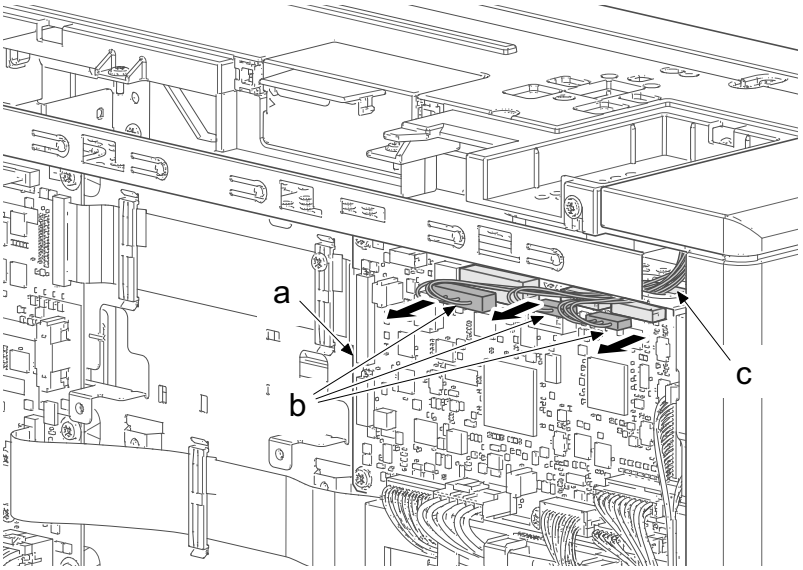

14 Remove two screws (a) (M3x8).

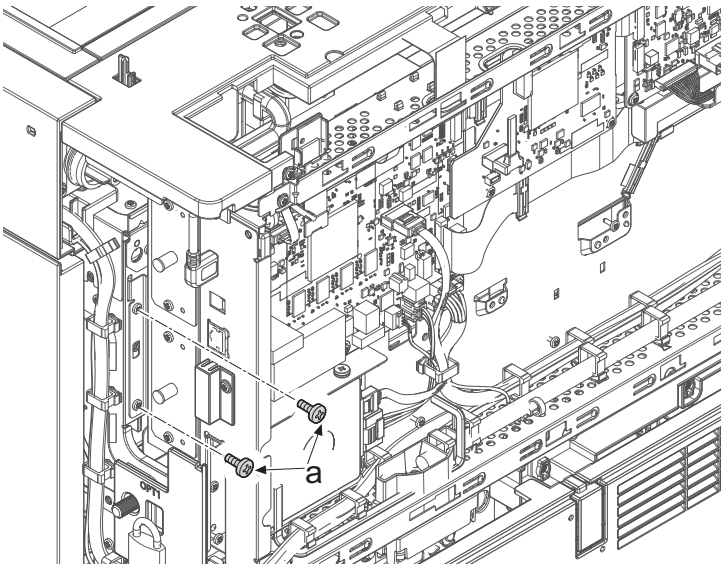

15 Lifting and pulling the shield box (a) then release the hooks (b).

16 Open the shield box (a).

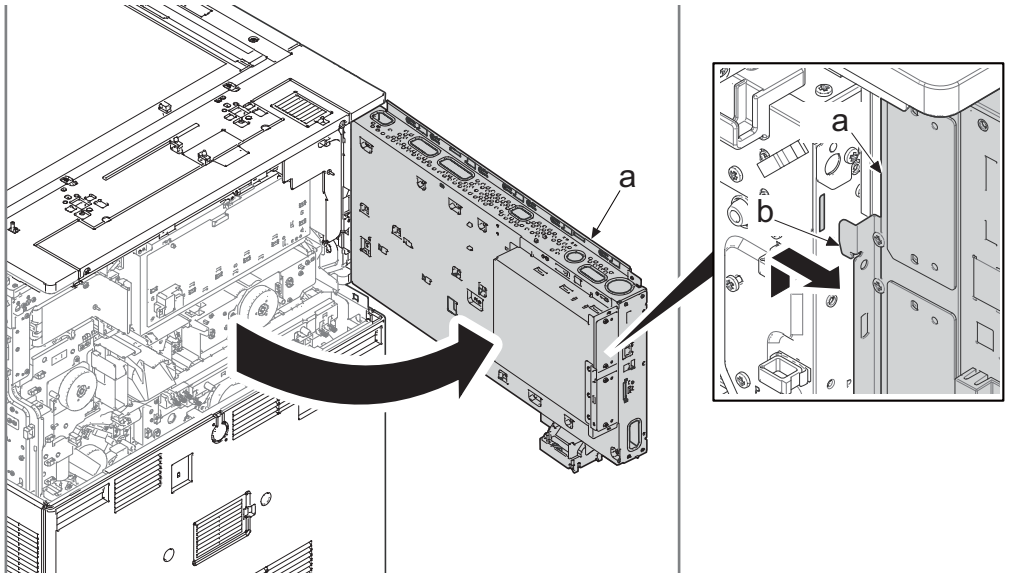

CAUTION

In case of operating at the rear lower side of the machine opening the shield box, pay attention not to hit your head to the shield box.

17 Detach the fuser unit.

18 Remove the two connectors (a) and wire (b) from the hook (c).

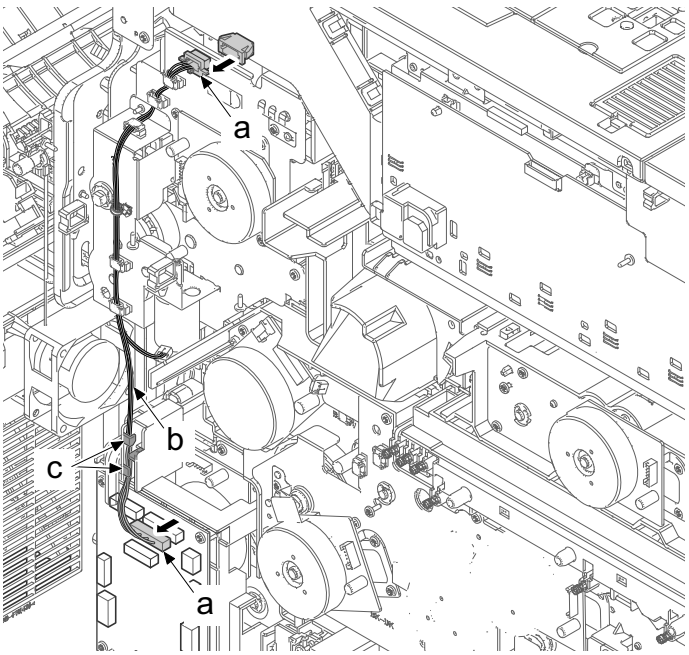

19 Remove four screws (a) (M3x8).

20 Detach the fuser drive unit (c) in the direction of the arrow, while pressing the release lever (b).

21 Check the fuser drive unit (c) and clean or replace it.

22 Reattach the parts in the original position.

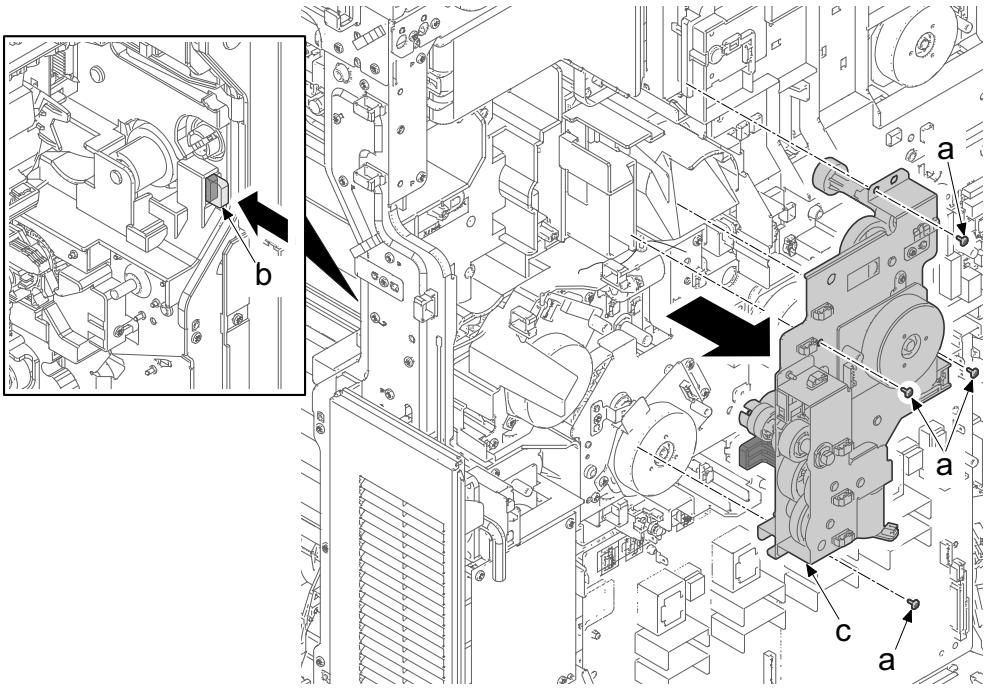

Notes for attaching

When reattaching the fuser drive unit (a), pull the lever (b) in the direction of the arrow and pass the opposite side lever (c) through the aperture (d).

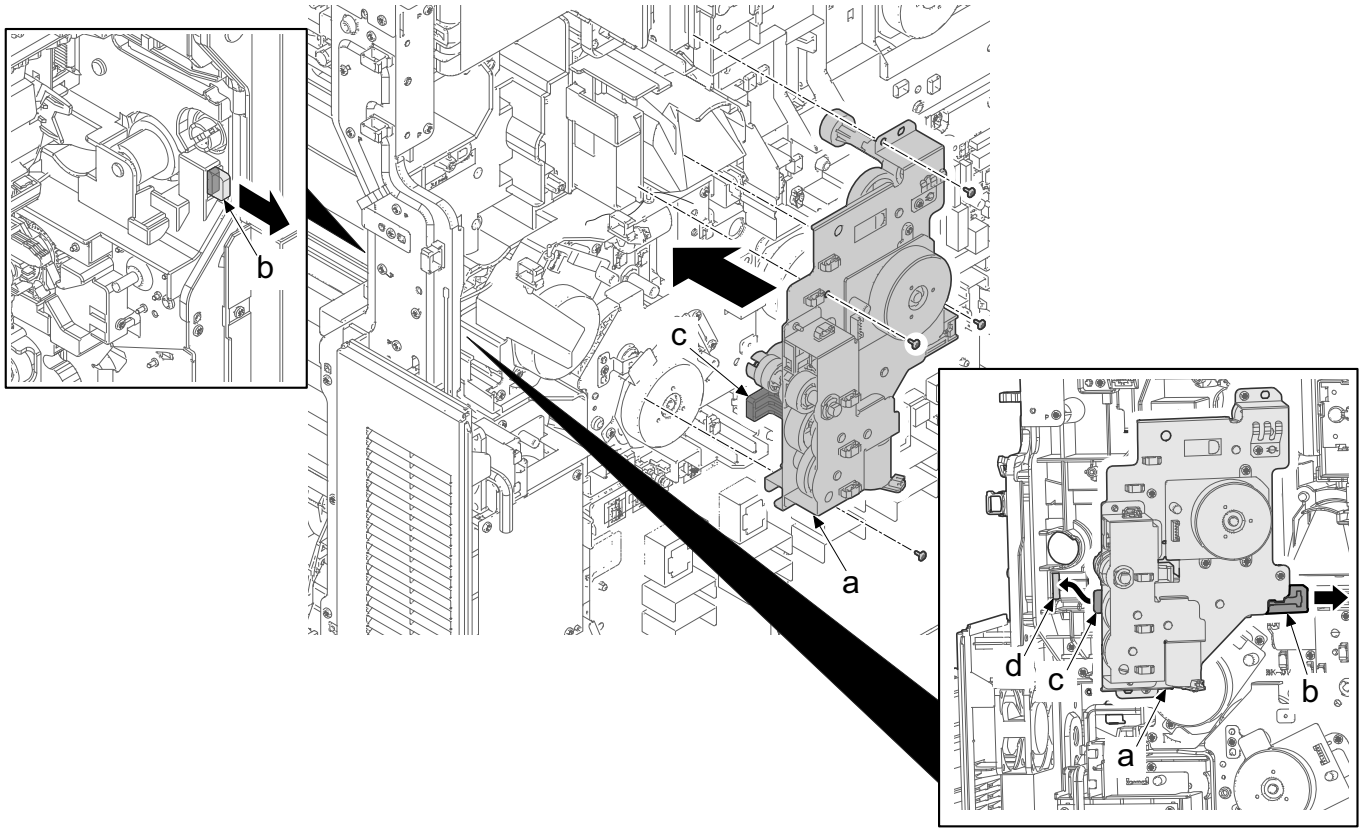

(4)Others

(4-1)Detaching and attaching the SSD

1 Remove a screw (a) (M3x10) and then remove the rear upper cover (b) by sliding in the direction of the arrow.

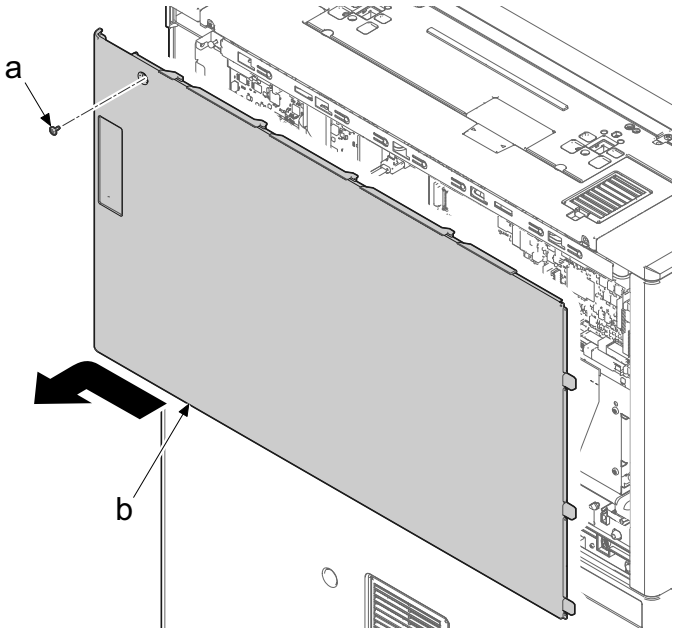

2 Remove the screw (a) (M2x4).

3 Remove the SSD (b) from the connector (c).

- Use a Phillips 1 screwdriver and take care not to damage the screws.
- This screw is exclusive. Do not secure rather than the item below.
  (7BB000204H BIND M SCREW 2x4)

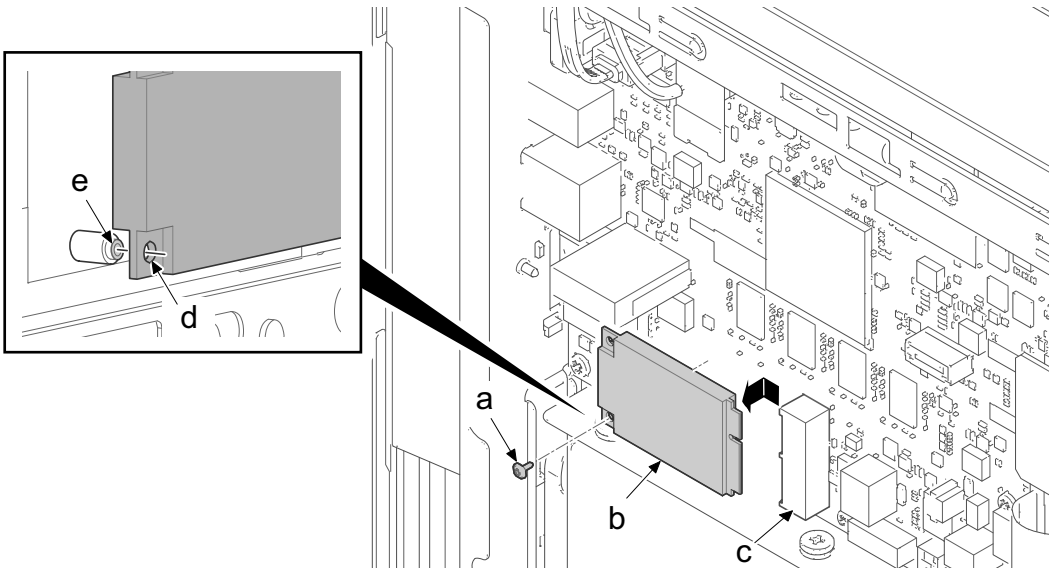

IMPORTANT

In order to avoid from damage, when attaching the SSD (b), align the screw hole (d) to the positioning boss (e).
Do not replace the main PWB, engine PWB and SSD at the same time.

SSD replacement procedures in case that the SSD replacement is indicated.

Data transfer by U026 is not available since data cannot be read when SSD is broken or it is in Read Only mode.

Preparation: 2 USB drives (for firmware and data backup).

Run data backup in U917 before start.

1 Firmware storage in a USB drive (USB drive A)

1 Store the latest firmware upgrade pack or release firmware set (Main/MMI/Panel/Browser/Dictionary/Language/Color table).

- Check the firmware applicable to the target model. Firmware installation gets unstable with inappropriate one. At least Main firmware is required for reboot.

2 SSD data backup (USB drive B)

- 64GB USB drive is necessary for 32GB SSD full backup.

1 Install the USB drive B.

2 Execute maintenance mode U026

Input "026" using the numeric keys and press [Start] key.

Select [SSE].

Select [Backup]. Press [Start] key.

Turn the power off after completion.

3 Replace the new SSD.

4 Turn ON the power installing USB drive A.

As the program loading from SSD can't be done, SSD recovery program which is SNOR on the main PWB start up and format SSD automatically.

- Pay attention that no USB drive makes F010 error.

5 When UPDATE completion is displayed on the control panel, turn OFF/ON the power with inserted USB drive A.

3 Update firmware. (See page page 5-1)

4 Retrieve the data backed up in the USB drive B.

5 Install from HyPAS application, application screen.

- Confirm HyPAS applications that come up on the application screen in advance of replacement.

(4-2)Detaching and attaching the hard disk drive

1 Remove a screw (a) (M3x10) and then remove the rear upper cover (b) by sliding in the direction of the arrow.

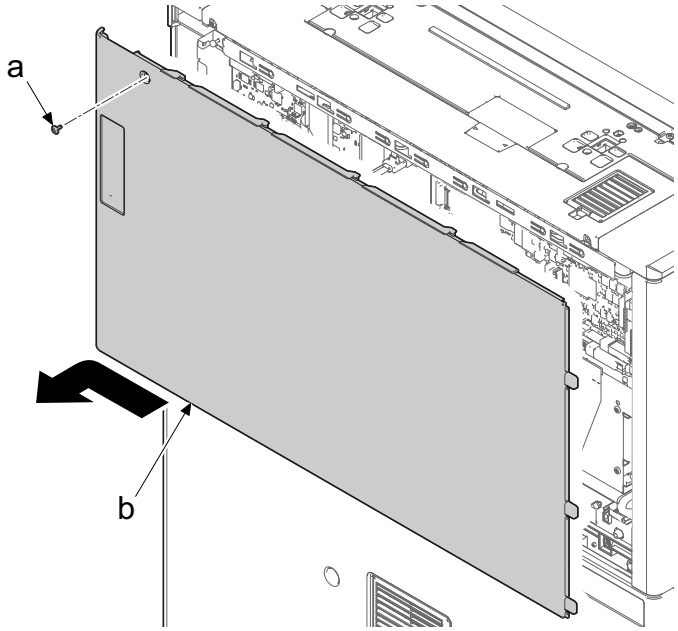

2 Disconnect two connectors (a).

3 Remove two screws (b) (M3x8). Remove two hooks (b) (M3x8) and remove the hard disk assembly (c).

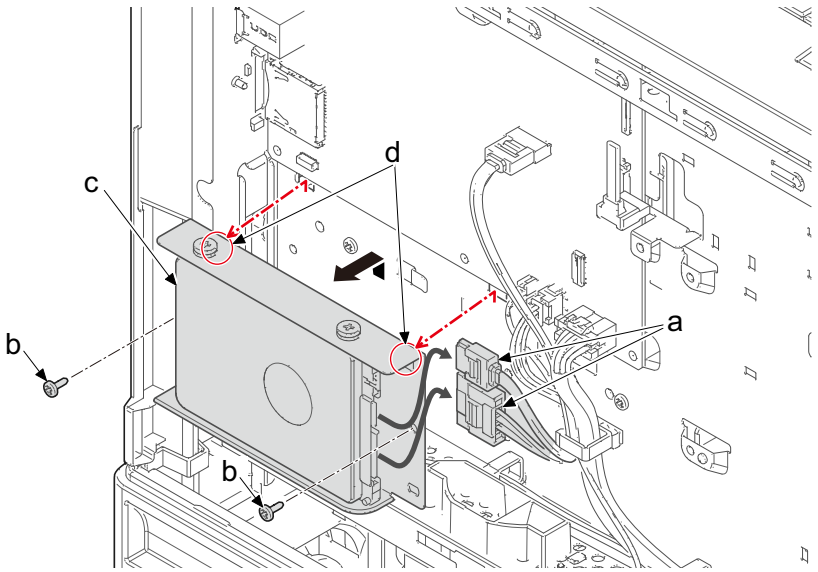

4 Remove four screws (a) and remove the hard disk drive (b).

5 Check the hard disk drive (b) and clean or replace it.

6 Reattach the parts in the original position.

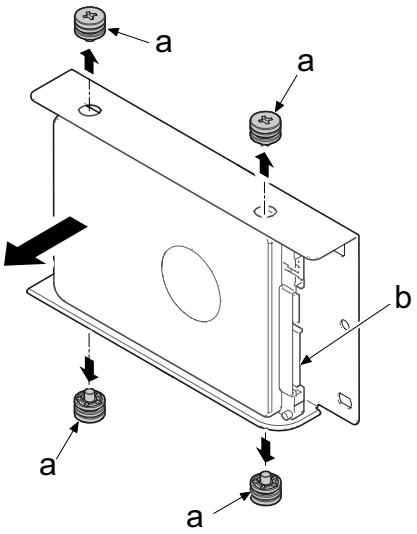

- Execute maintenance mode U024 (See page 6-42) when formatting a new HDD.

IMPORTANT

Do not touch on the PWB face (b) when installing the HDD (a) to avoid from damage.

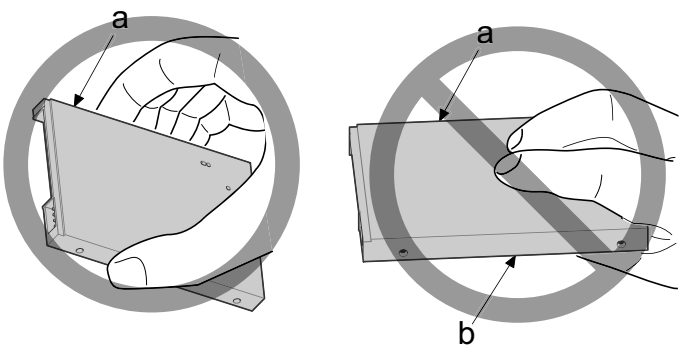

(4-3)Detaching and attaching the lift motor

1 Pull out the upper cassette (a) from the main unit (c) and remove it in the direction of the arrow.

2 Pull out the lower cassette (b) from the main unit (c) and remove it in the direction of the arrow.

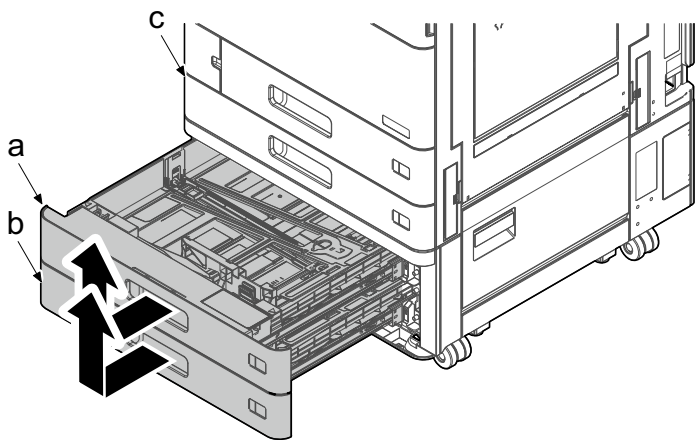

Notes for attaching

Insert the positioning parts (b) and (d) into the rail shaft and pin (c) when attaching the cassette (a).

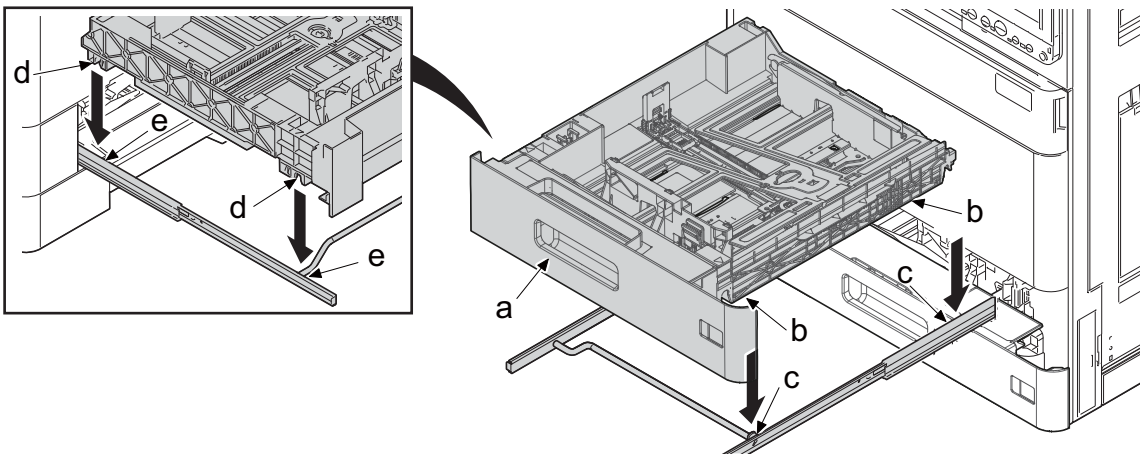

3 Disconnect two connectors (a) and three screws (b) (M3x8).

4 Remove the lift motor (c).

5 Check the lift motor (c) and clean or replace it.

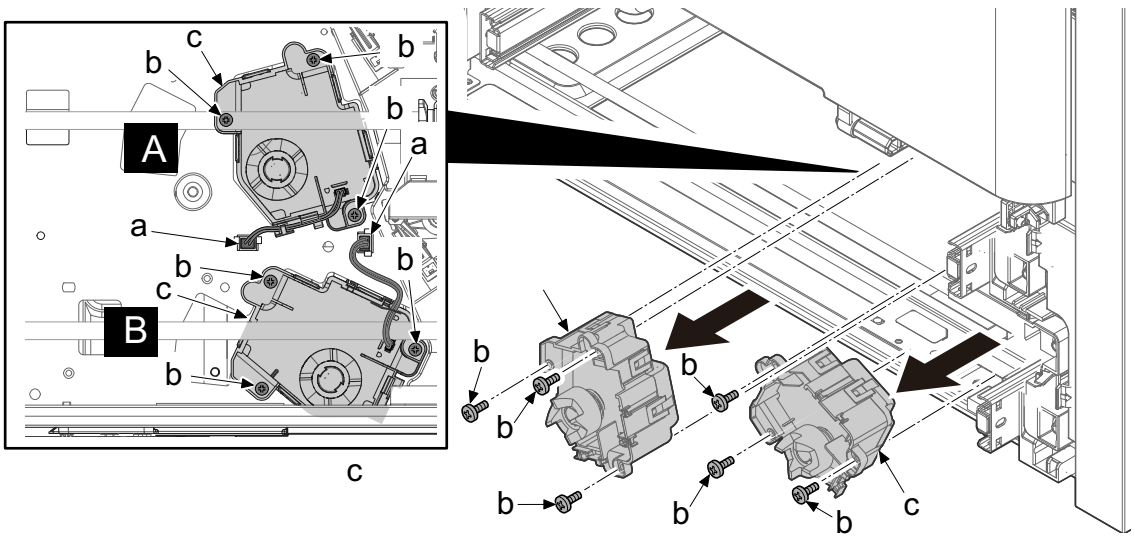

Replacement steps

Upper side (A)

1 When replace lift motor, disconnect connector (b) from original lift motor (a) and remove wire (c) releasing 2 hooks (d).

2 Connect (b) of wire (c) to new lift motor (e).

Lower side (B)

1 When replace lift motor, disconnect connector (b) from original lift motor (a) and remove wire (c) releasing 2 hooks (d).

Do not apply film (b) on the new lift motor.

2 Connect (b) of wire (c) to new lift motor (e).

Do not fix the wire (D) with hook (f).

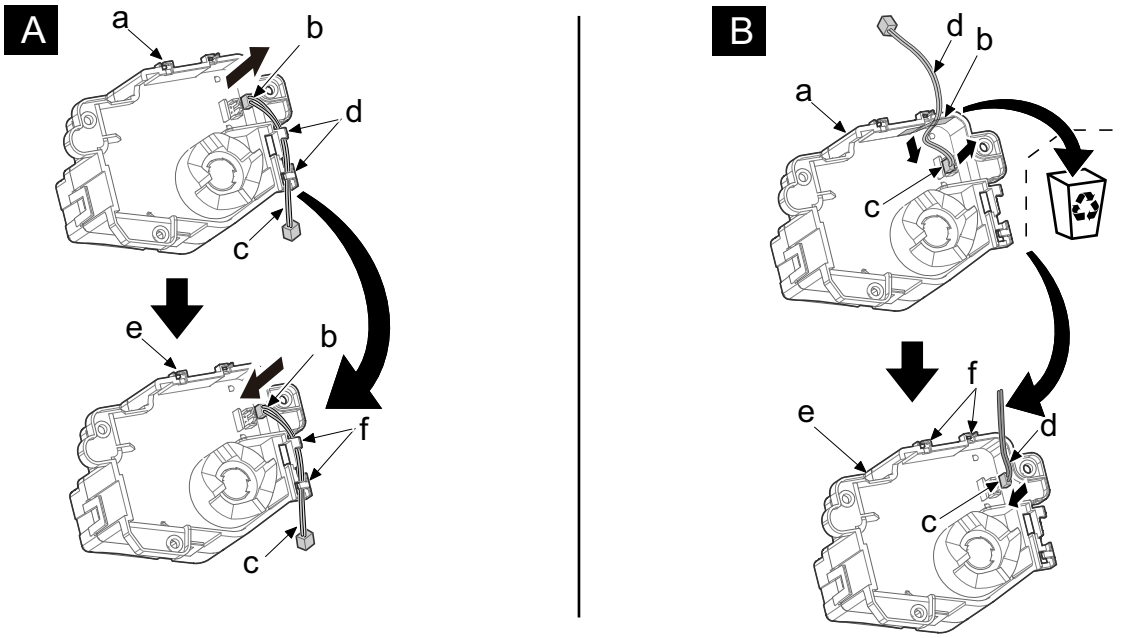

3 Reattach the parts in the original position.

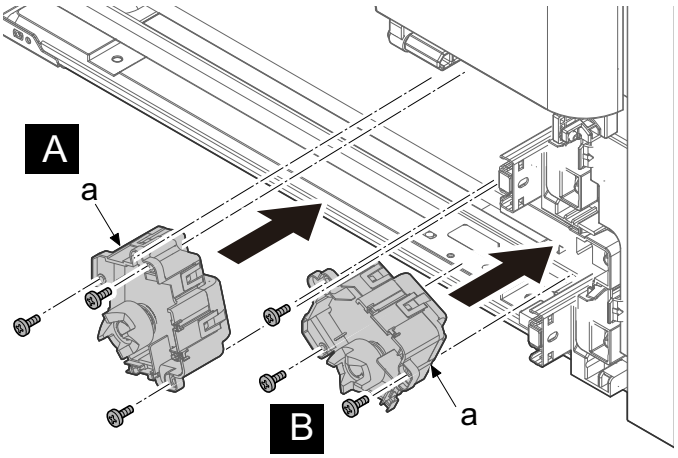

(4-4)Detaching and attaching the fuser discharge unit

1 Open the right cover (a) of the main unit (b).

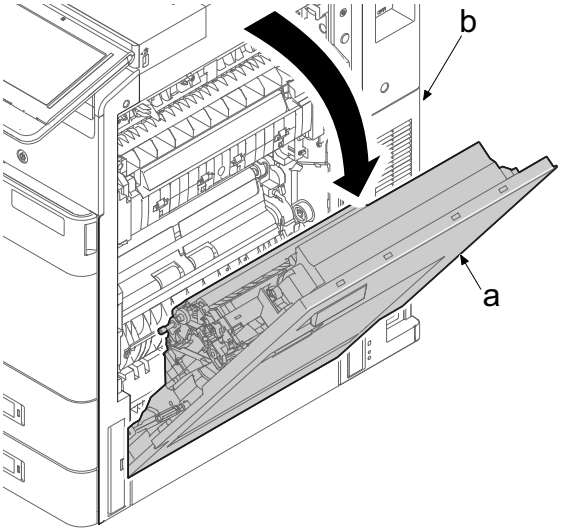

2 Release the hook (b) while pressing the left and right levers (a), detach the fuser unit (c) in the direction of the arrow.

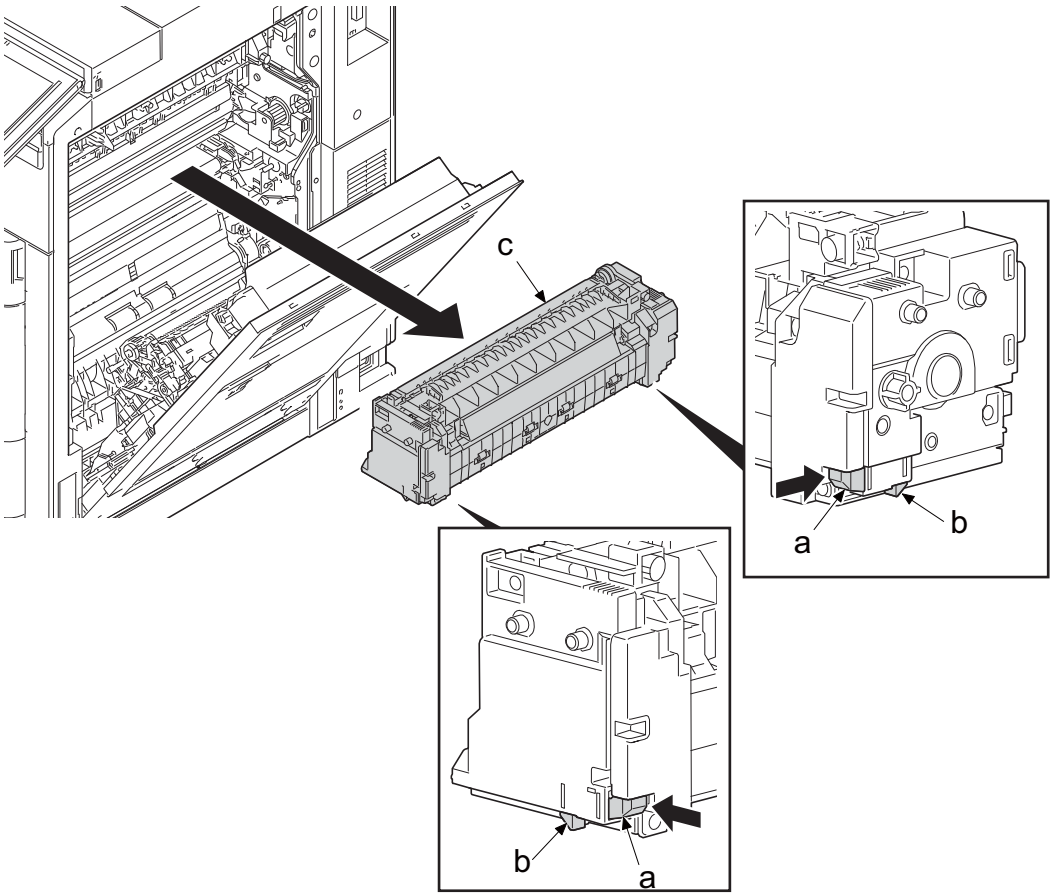

3 Remove three screws (a) (M3x12).

4 Take fuser discharge unit (c) away from IH unit (b).

5 Replace fuser discharge unit (c).

6 Reattach the parts in the original position.

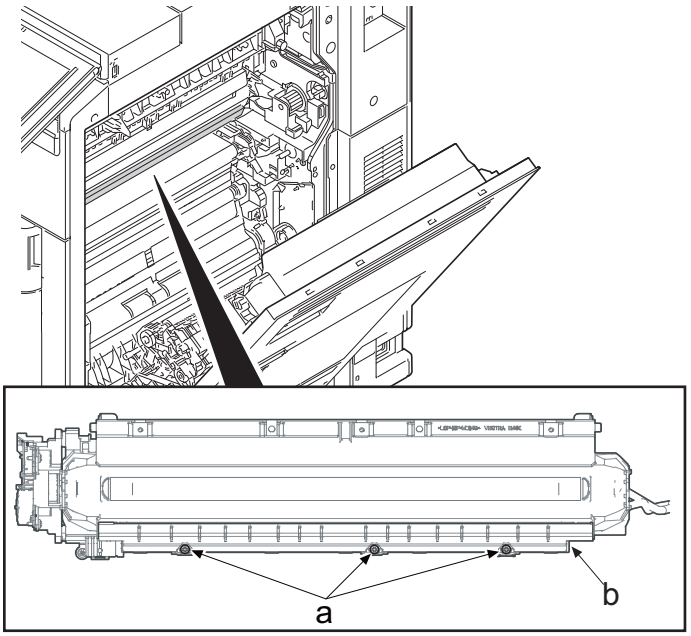

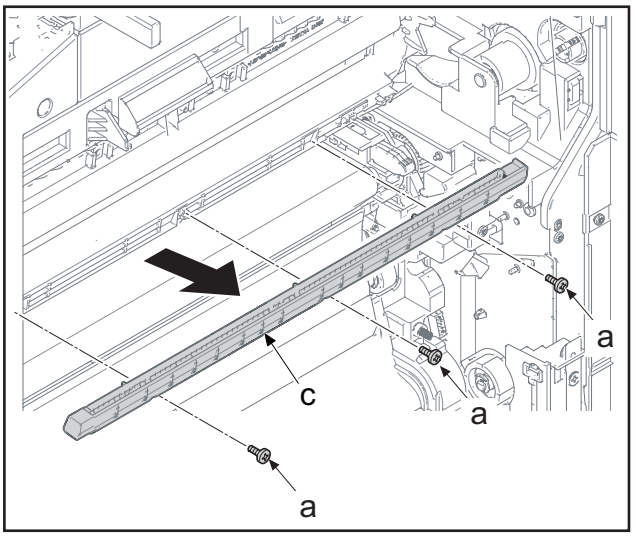

Clear the MC corrective counter with maintenance mode U167 [Clear] after fuser discharge or IH unit replacement.

Fuser counter clear (maintenance mode U127): Clear

(4-5)Detaching and attaching the exit unit

1 Open the right cover (a) of the main unit (b).

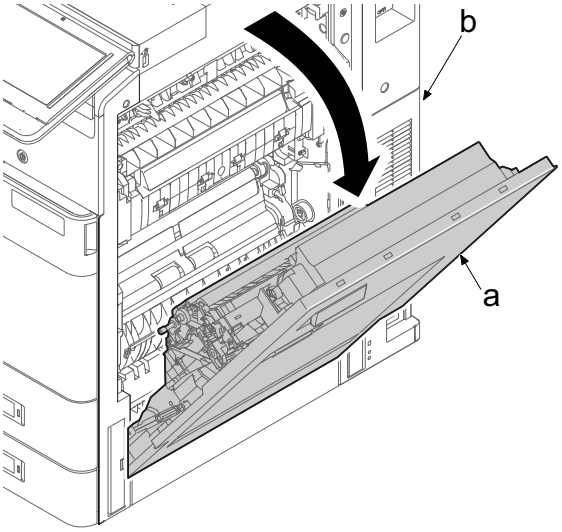

2 Detach the fuser unit.

3 Disconnect the connector (a) of the exit unit.

4 Remove four screws (b) (M3x8) and detach the exit unit (c).

5 Check the exit unit (c) and clean or replace it.

6 Reattach the parts in the original position.

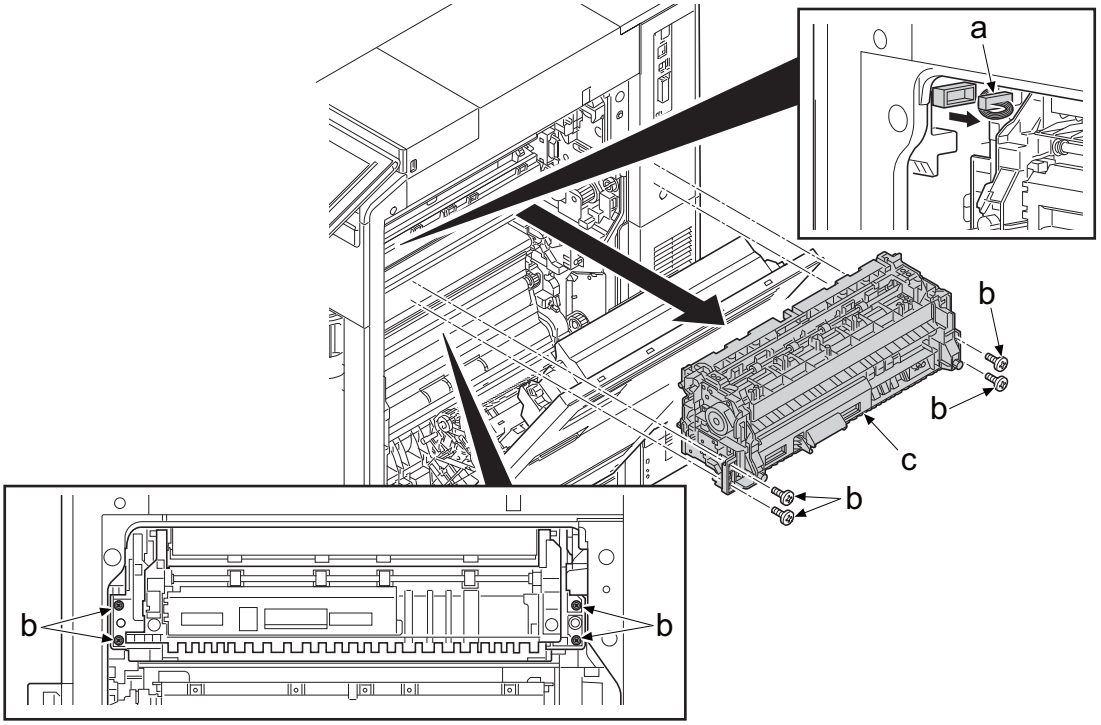

IMPORTANT

When replacing the exit unit, check the mounting step (arrows below) as it might cause the conveying failure.

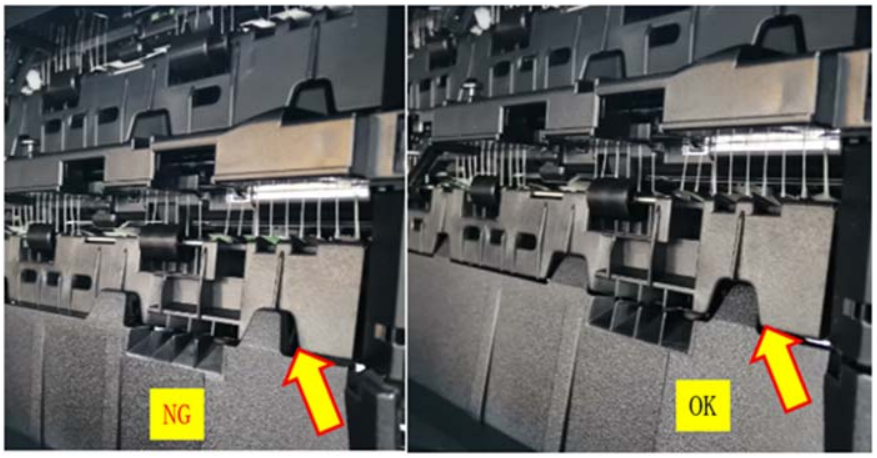

(4-6)Detaching and attaching waste toner box unit

Pull toner container (Y,M,C,K) out in ready mode.

In case that container cover (b) is locked, open it with container solenoid that is run by maintenance mode U033

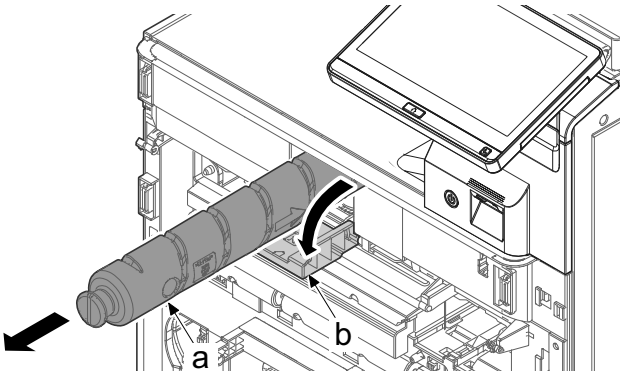

1 Pull out the upper cassette (a) from the main unit (c) and remove it in the direction of the arrow.

2 Pull out the lower cassette (b) from the main unit (c) and remove it in the direction of the arrow.

Pull toner container (Y,M,C,K) out in ready mode.

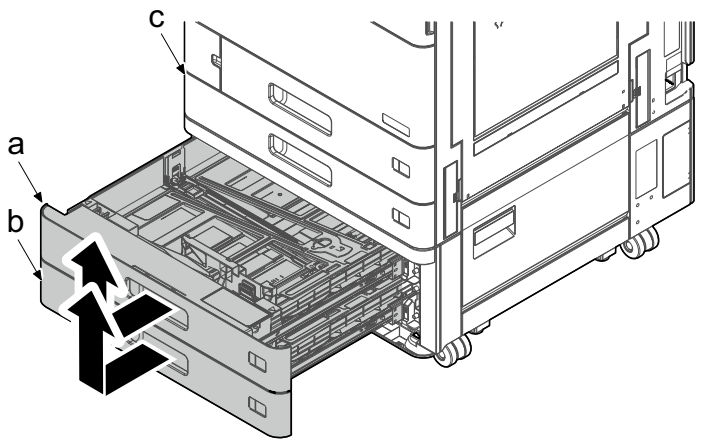

Notes for attaching

Insert the positioning parts (b) and (d) into the rail shaft and pin (c) when attaching the cassette (a).

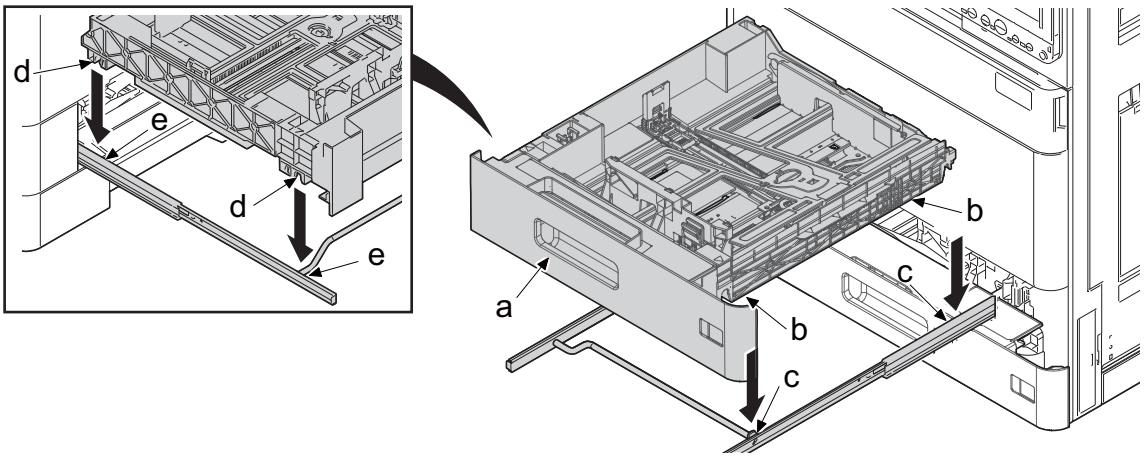

3 Release five hooks (b) of front right cover (a) and remove it in the direction of the arrow.

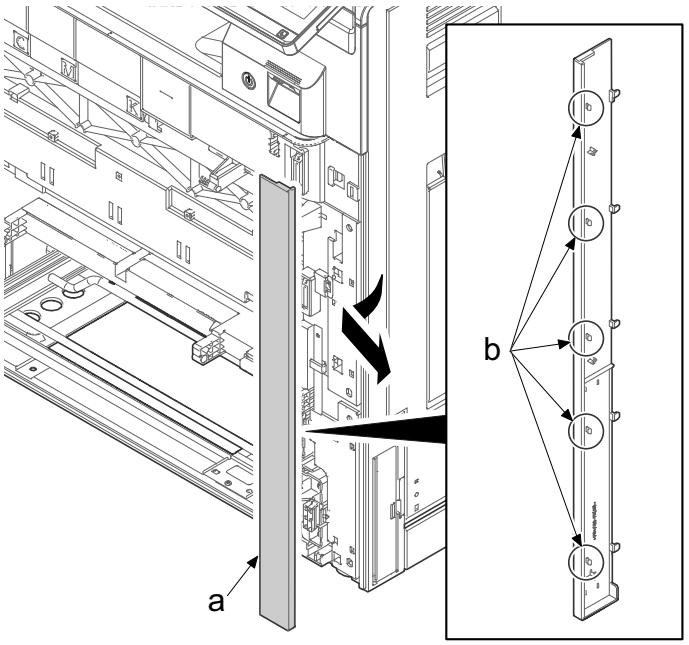

4 Remove the stop ring (b) from the fulcrum pin (a) of the front cover for maintenance.

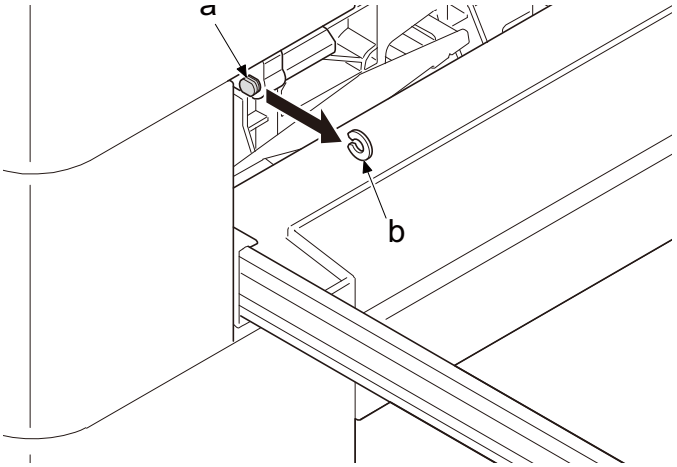

5 Open the front cover slightly.

6 Open the front cover for maintenance (a).

7 Remove each one screw (b) of the strap (c) and remove front cover for maintenance (a) in the direction of the arrow.

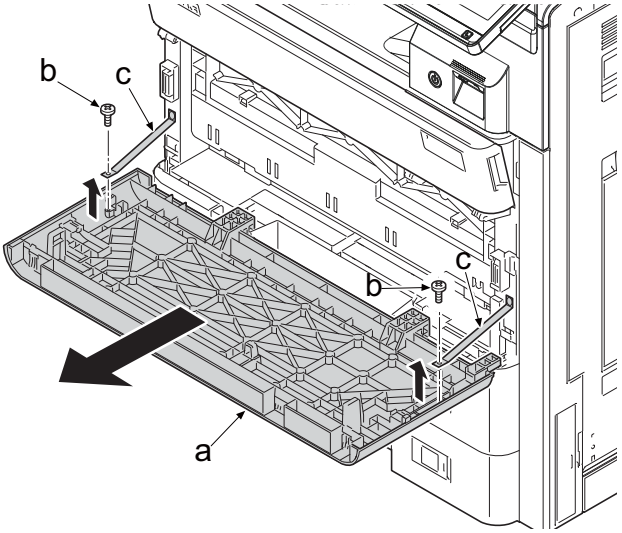

8 Close the front cover (a).

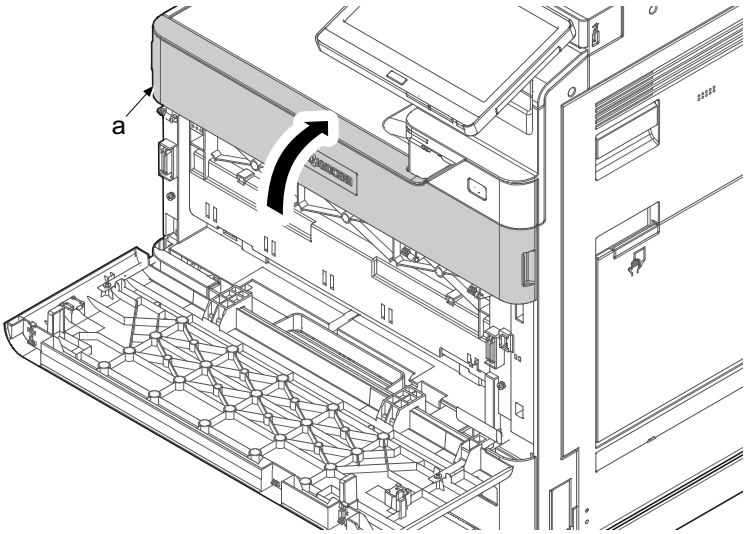

9 Remove the stopper (b) of the front cover (a).

10 Slide the front cover in the direction of the arrow and remove the fulcrum (d) from the fulcrum shaft (c).

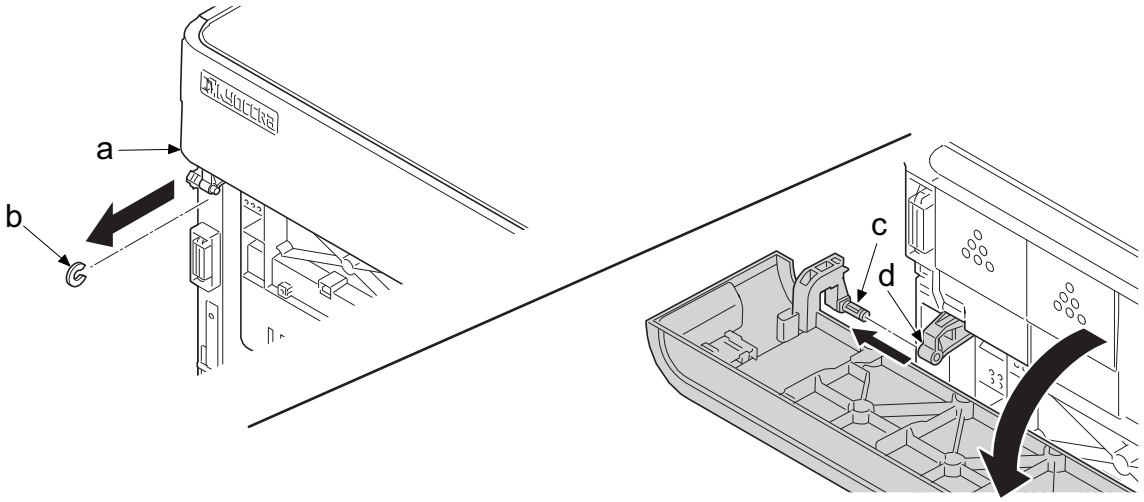

11 Remove the pin (b) while bending the fulcrum and detach the waste toner box cover (a).

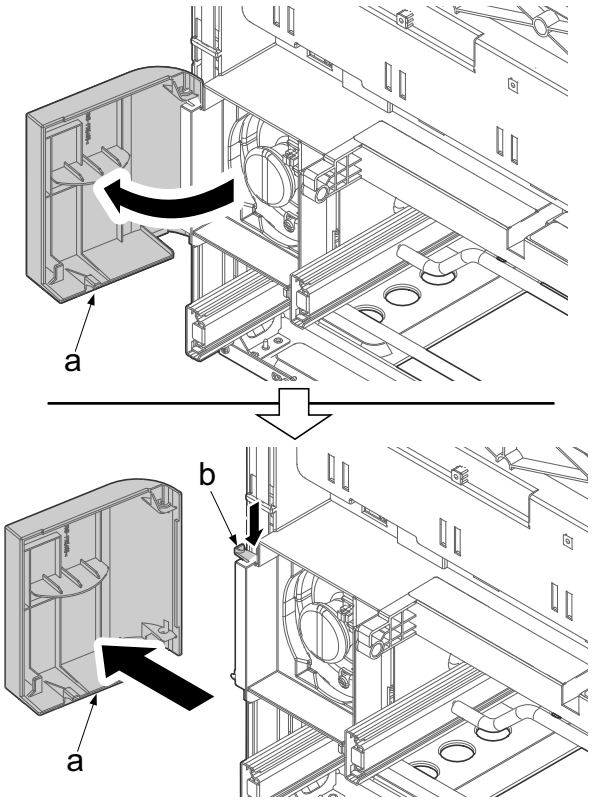

12 Detach the waste toner box (a).

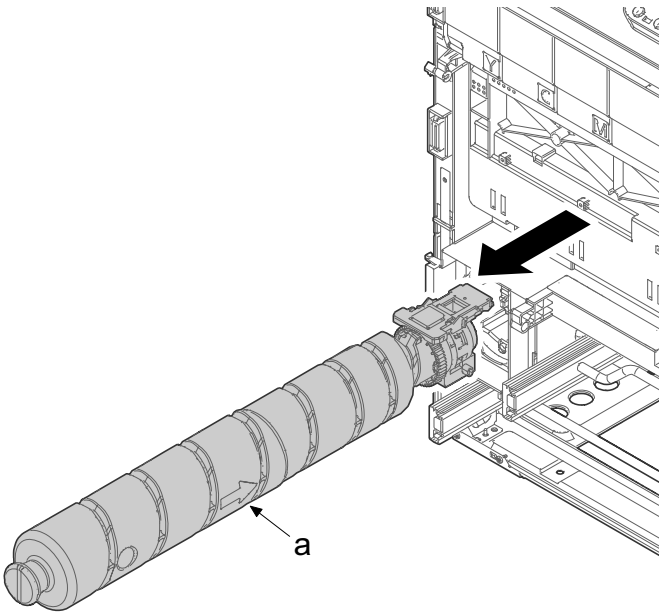

13 Release the 6 protrusions (b) and open the retainer sheet (a) towards the front side.

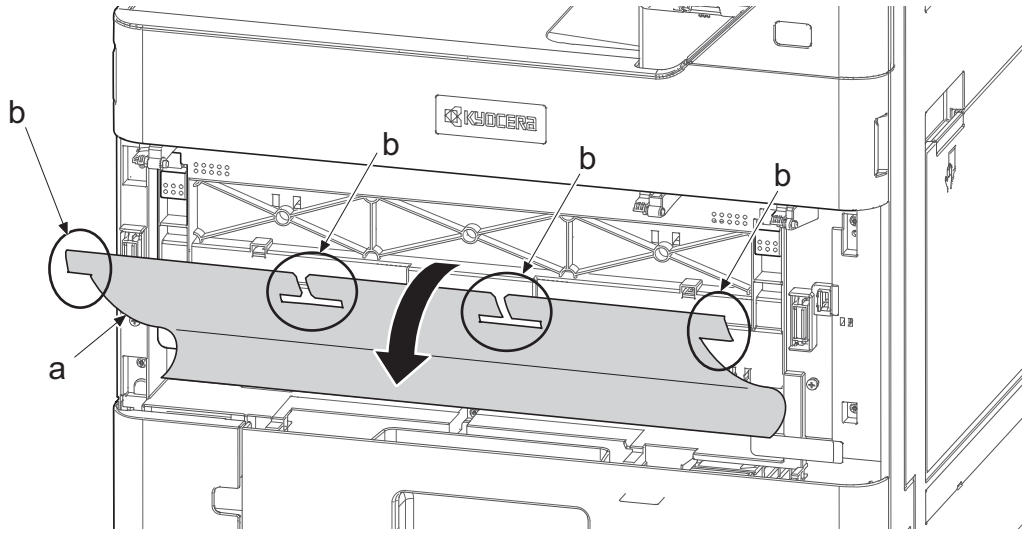

14 Open inner cover (a) pulling left and right lever (b) on the cover.

15 Detach the primary transfer unit.

16 Detach the drum units.

17 Detach the developer units.

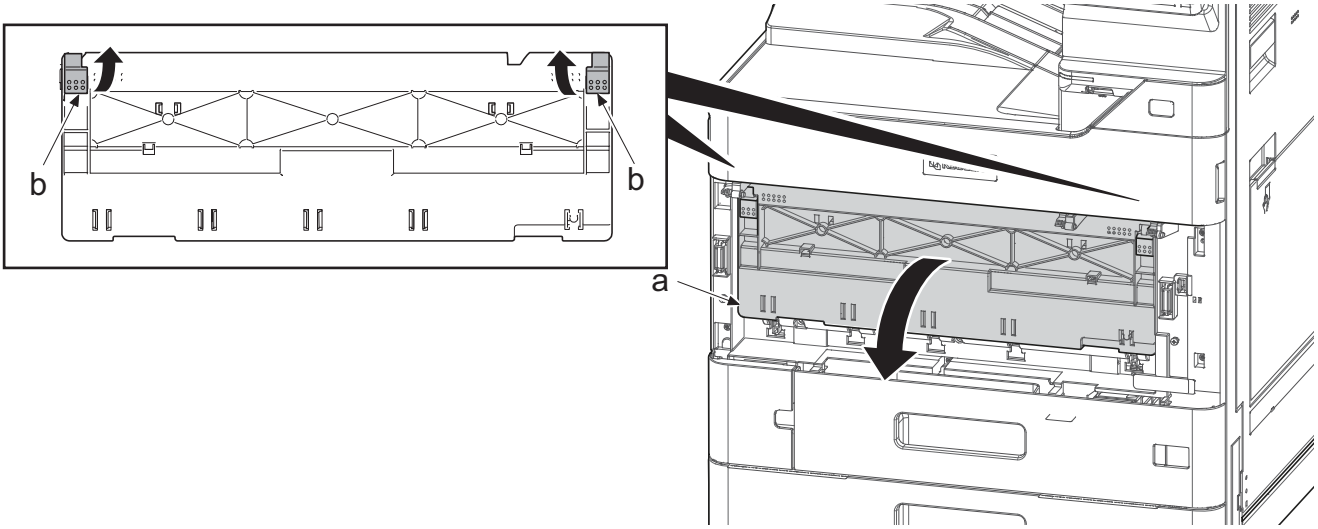

18 Release the hook (b) with the flat-blade screwdriver (a) and remove inner cover (c) in the direction of the arrow.

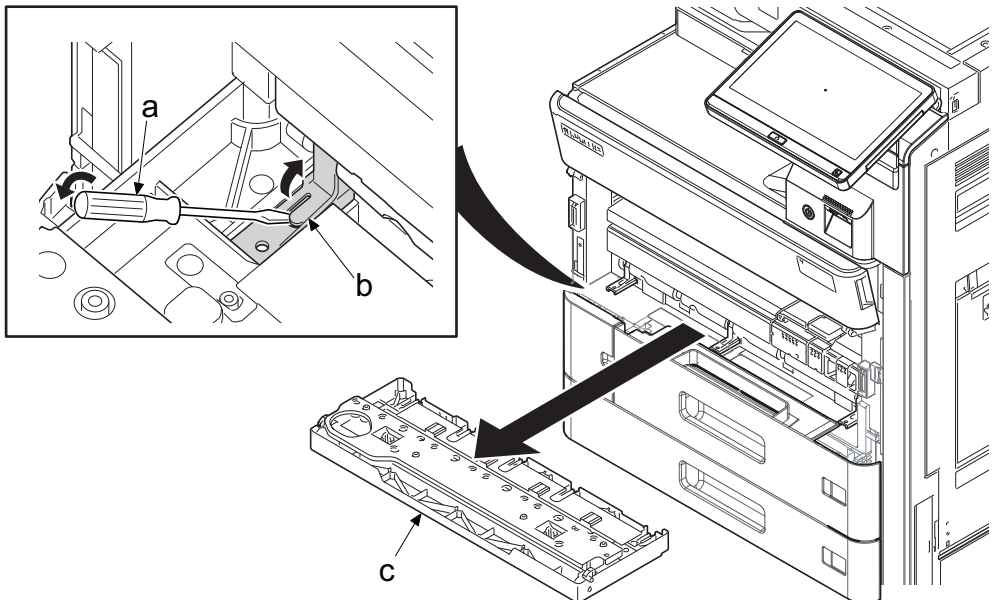

19 Remove three screws (b) (M3x8).

20 Remove one connector (a) and detach the front container unit (c).

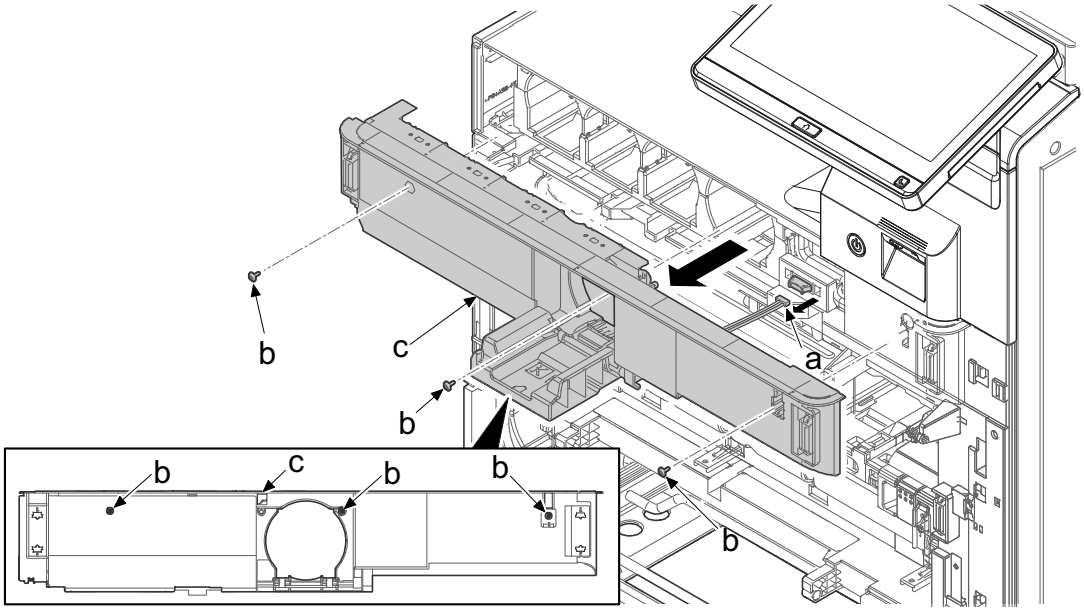

21 Remove 2 screws (a) (M3x10).

22 Push down the rear lower cover (b), release the upper rib, lift in slightly opened state and release the lower hook (c). After that, remove it in the direction of the arrow.

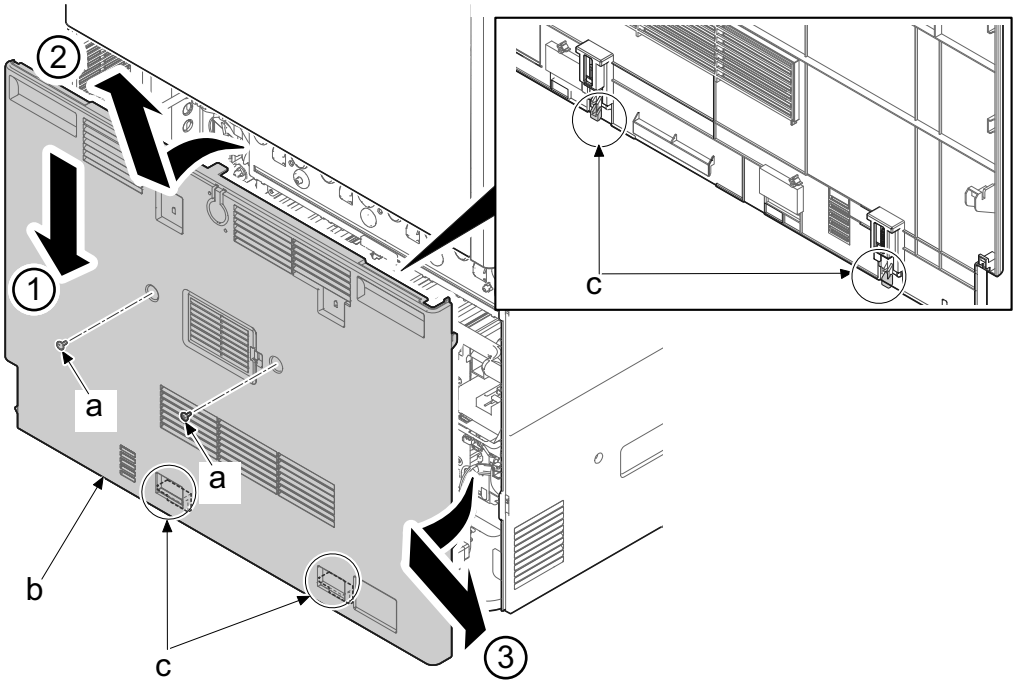

23 Unlock clamp (a) and remove the wire (c) from connector (b) on waste toner box unit.

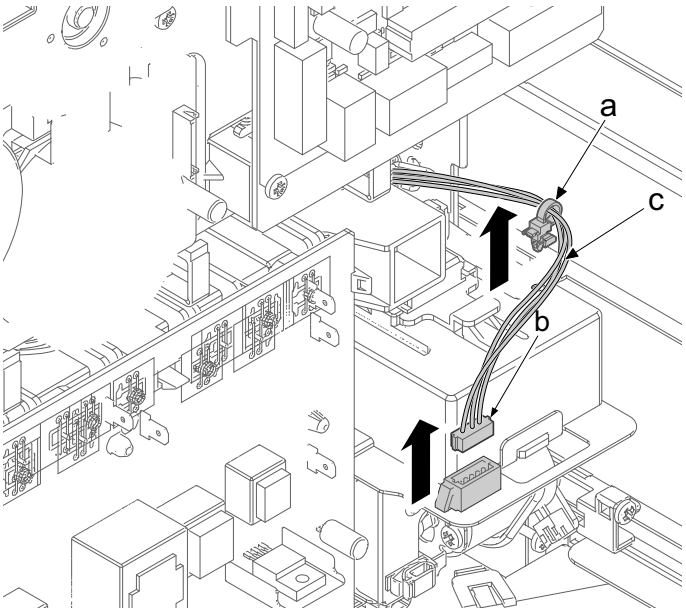

IMPORTANT

Make room for the wire (a) once it connects.

Otherwise, pay attention, wire pulls the toner box unit and that makes detection error or early detection.

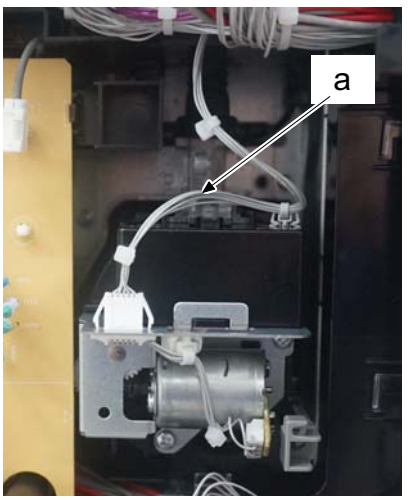

24 Push up the hook (b) of the waste toner joint (a) to release the stopper (c) and pull it out toward you.

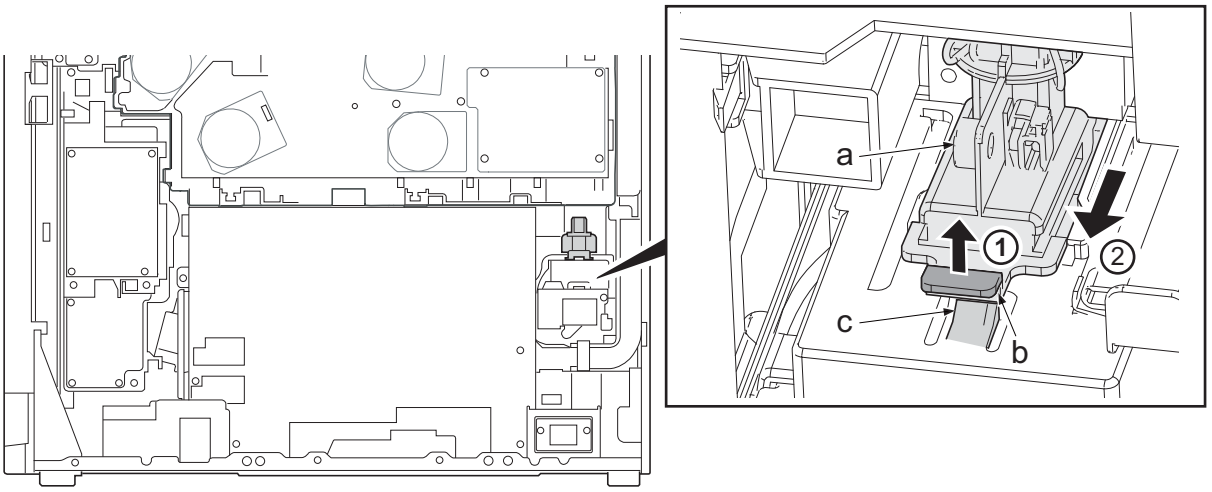

IMPORTANT

Cleaning spring for sensor in waste toner joint may have malfunction unless detach the drive unit without removing waste toner joint (a). This leads waste toner detection error.

Waste toner joint has to be released before take the waste toner box unit away.

25 Pull the rail (b) of upper stage cassette and remove one screw (a) (M3x8).

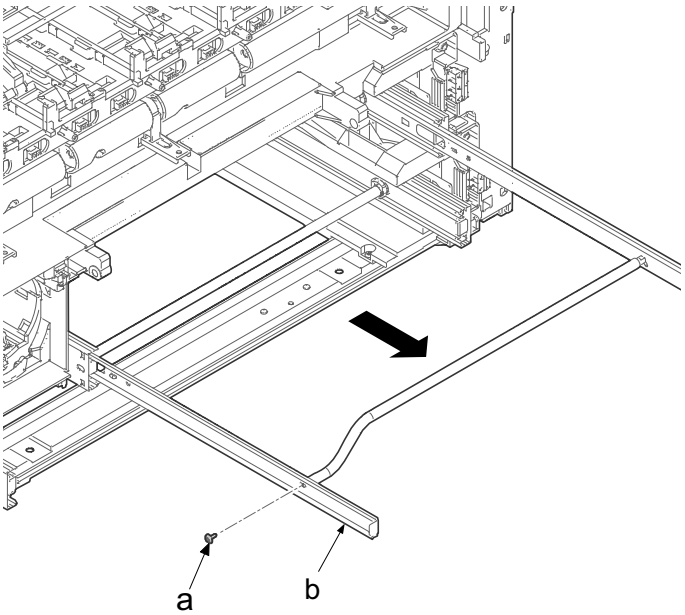

26 Open the right cover.

27 Remove two screws (a) (M3x8) of the right front cover.

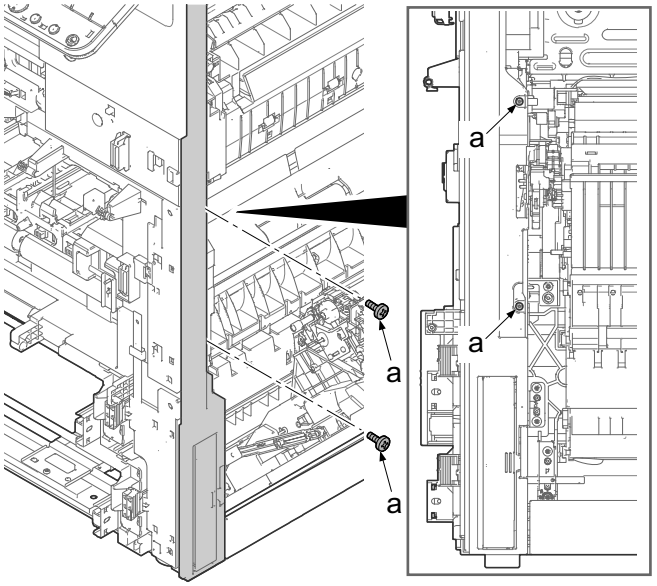

28 Disconnect the connector (c). Remove seven screws (a) (M3x8) and then remove the front inner cover (b).

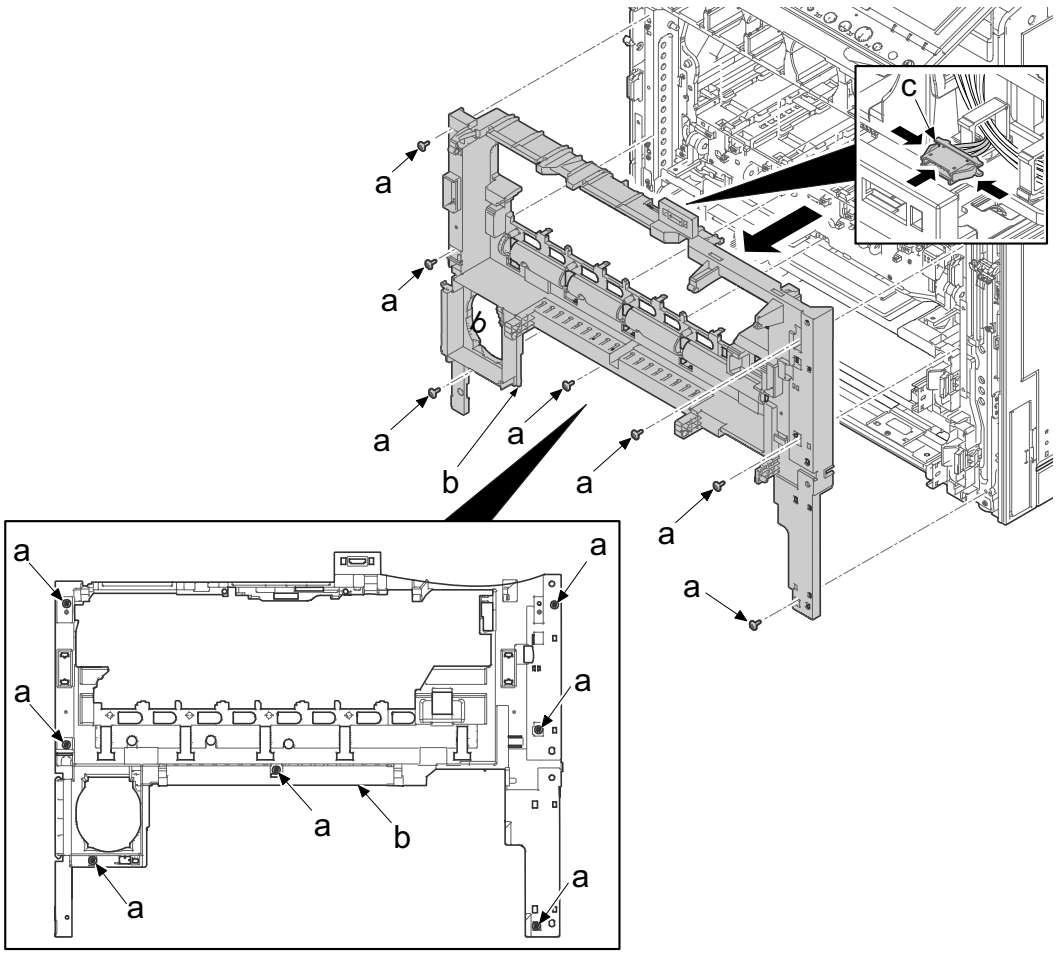

Notes for attaching

Lay down inner cover hinges (a) and confirm that pressure cam (b) for developer unit is down before attachment.

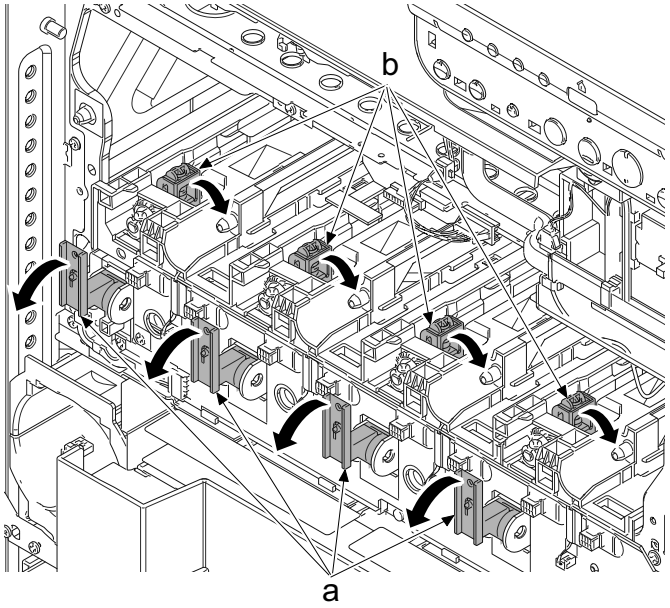

29 Disconnect one connector (a).

30 Remove two screws (b) (M3x8).

31 Remove two hooks (c) and remove the drum developer relay PWB (d).

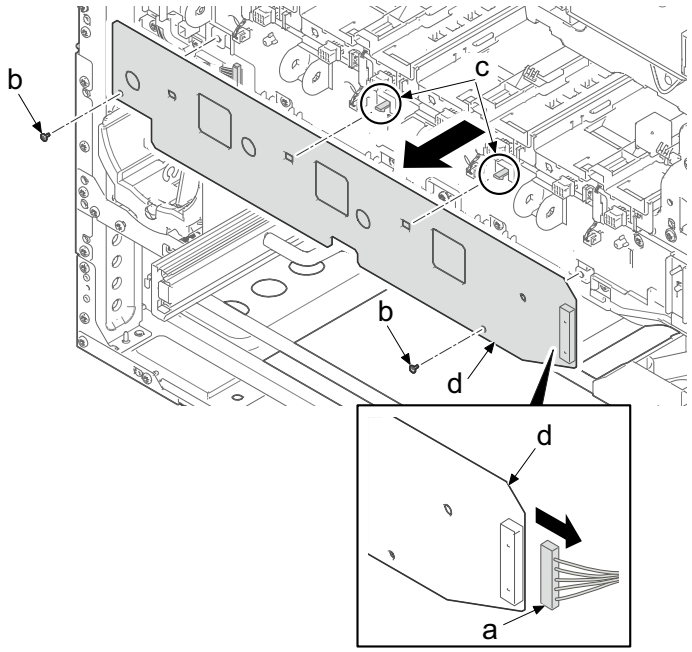

32 Remove two screws (a) (M3x8).

33 Release 4 hooks (c), and then remove the rear left cover (b) in the direction of the arrow.

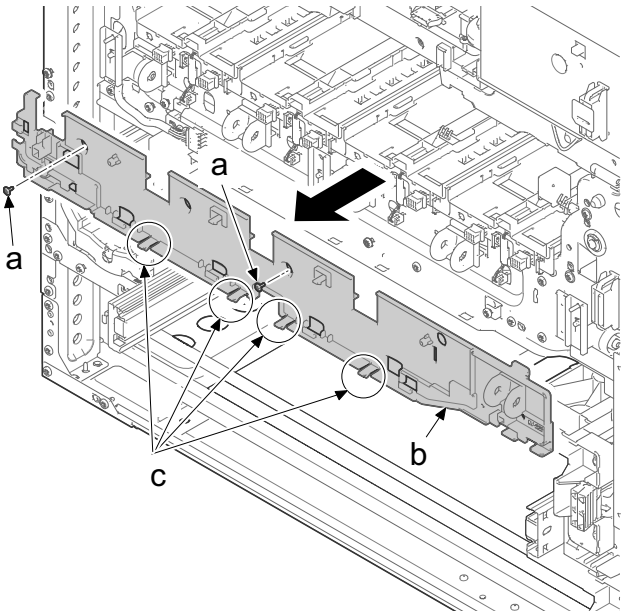

34 Open the front cover.

35 Remove two screws (a) (M4x10) from the left upper cover (c) and the screw (b) (M3x8) from the left lower cover.

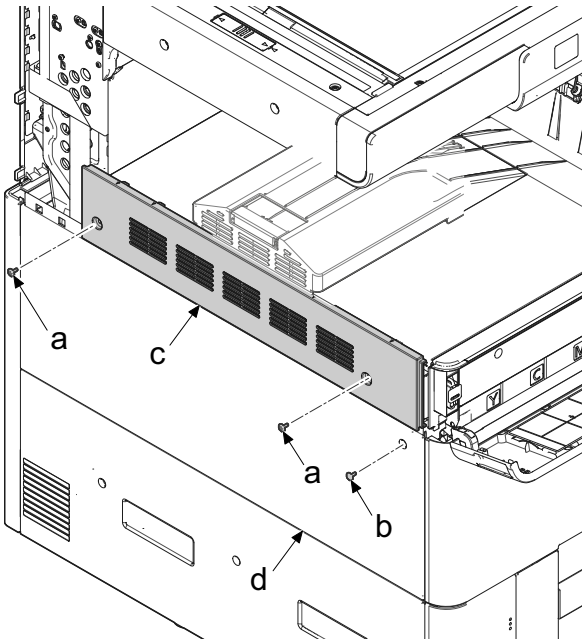

36 Release four hooks (b) in top of the left top cover while spread left lower cover (c) in the direction of the arrow, and remove the left top cover (a).

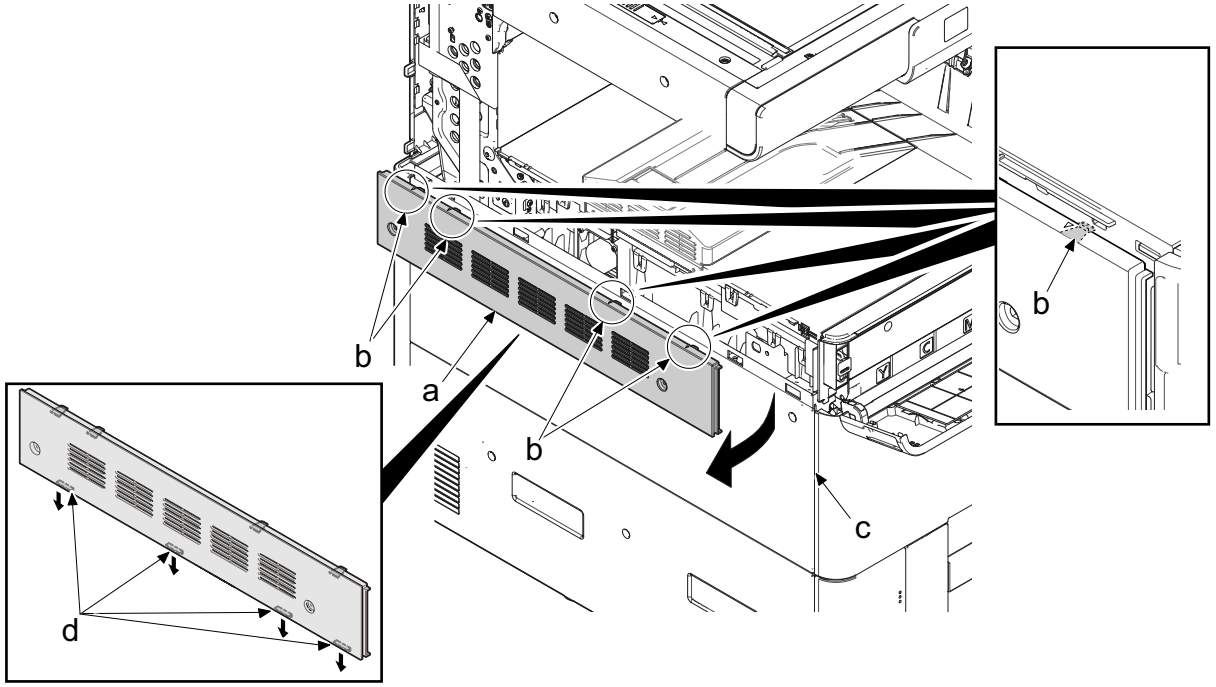

Notes for attaching

latching four lower hooks (c and the upper hook (b) then attach the top left cover (a).

37 Pull out the lower cassette.

38 Remove three screws (a) (M3x8).

39 Lift and remove four hooks (c) and remove left lower cover (b).

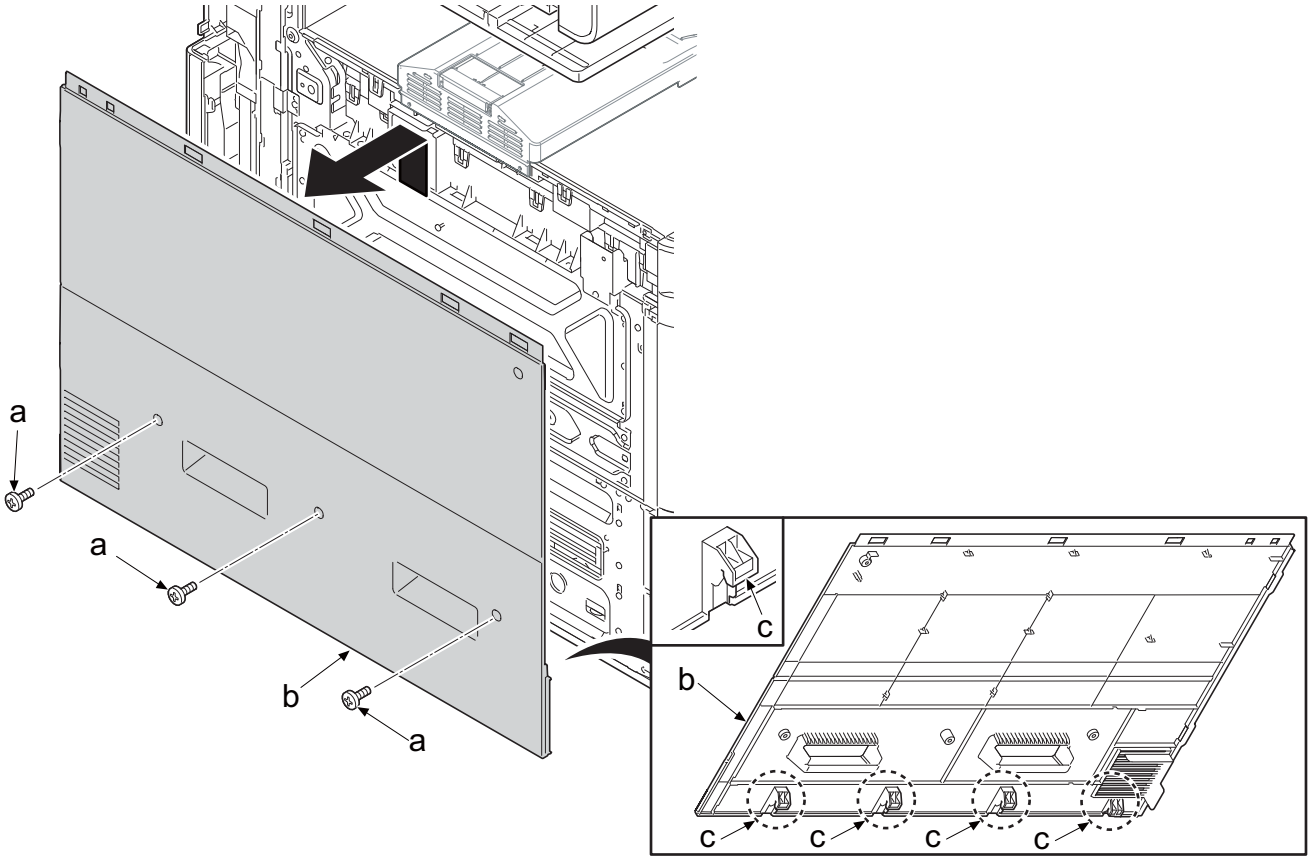

40 Remove the screw (a) (M3x8).

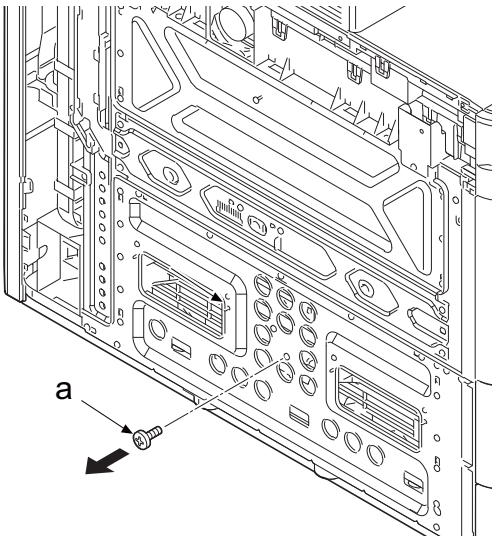

41 Remove two screws (a) (M3x8) and remove the waste toner box unit (b).

42 Check the waste toner unit (b) and clean or replace it.

43 Reattach the parts in the original position.

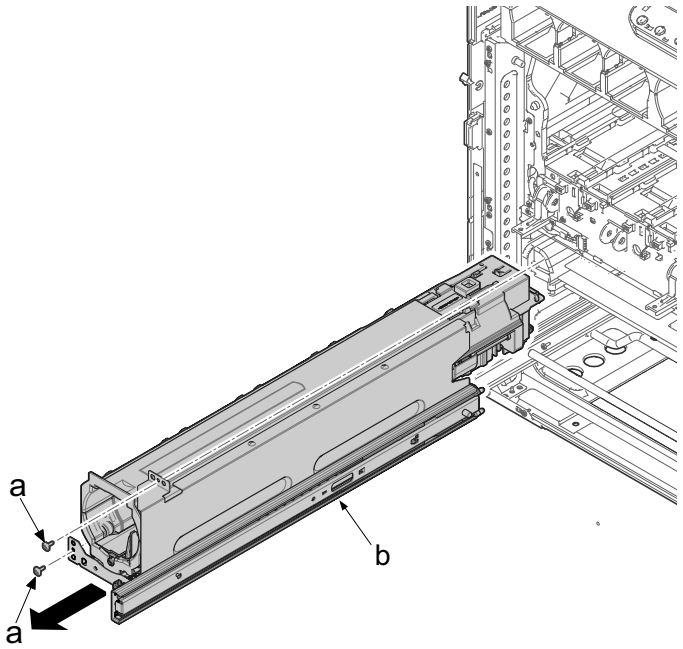

- When replacing with the new waste toner box unit, remove two screws (c)(M3x8) from the old unit (a) and detach the slide rail (b) and attach it to the new unit.

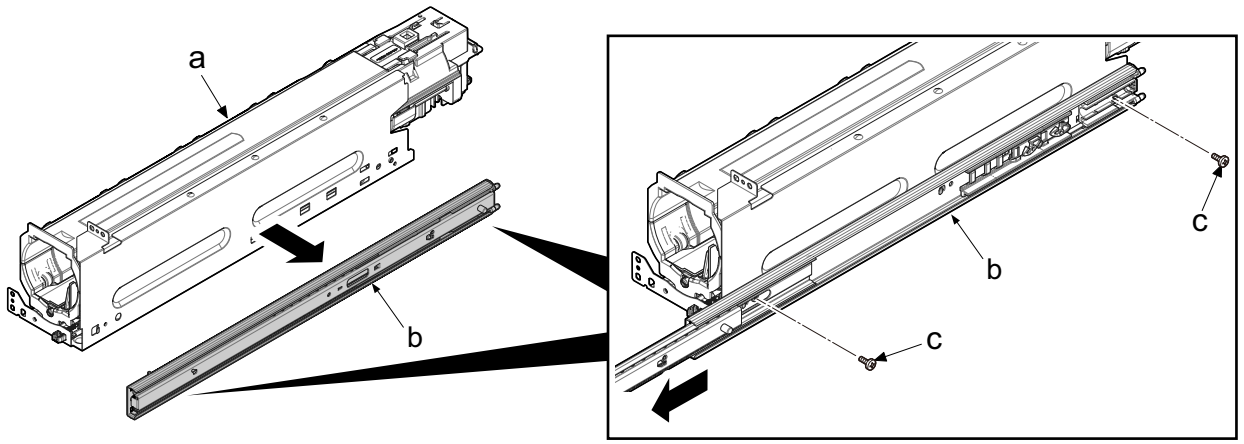

Execute the following setting after replacing the waste toner box.

Waste toner bottle weight detection calibration (execute maintenance mode U155): calibration

- Accessories for waste toner box unit
  A: Waste toner box unit
  B: Waste toner bottle

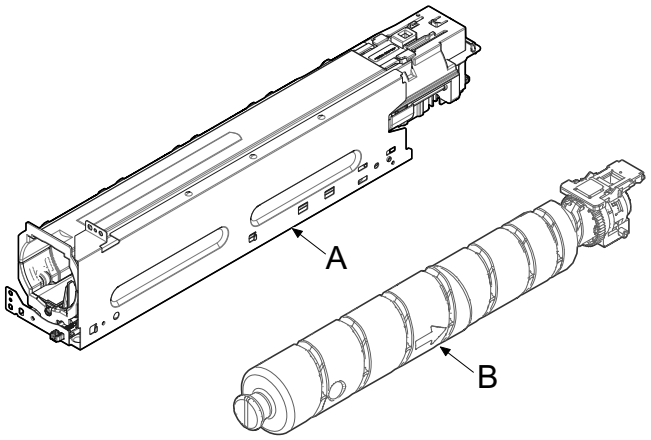

1 Turn on after waste toner box replacement without waste toner bottle.

2 Select maintenance mode U155 and close the waste toner box cover.

3 Select [Calibration] and confirm [None] indicated next to [Waste Toner] then press [Start] key.

4 Confirm that [OK} comes up at next to [Execute].

5 Insert the empty waste toner box and close the waste toner box cover (a).

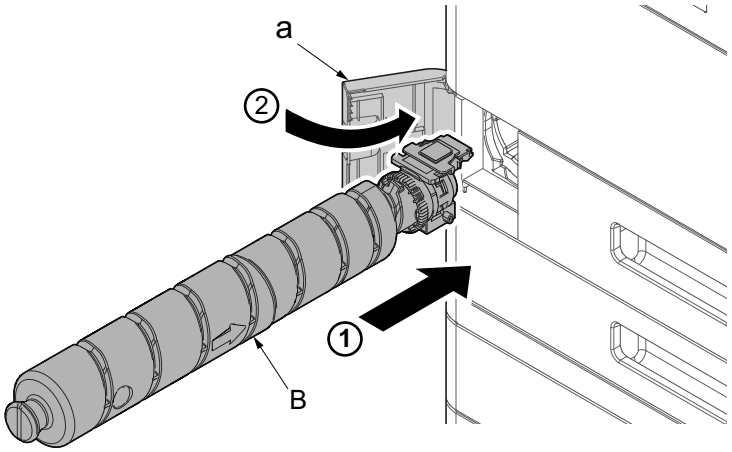

6 Press [Waste Toner] and confirm that [None] turn to [Empty] and press [Execute] then [Start] key.

7 Renew the value next to [None/Empty] and confirm [OK] next to [Execute].

- If numbers (error code) is indicated next to [Execute], redo from the first step.
  (If the detected waste toner box weight unstable (box installed/not installed), an error is indicated)

(4-7)Fan motor attachment direction

When reattaching the fan motor, be careful of the attachment direction (intake/exhaust).

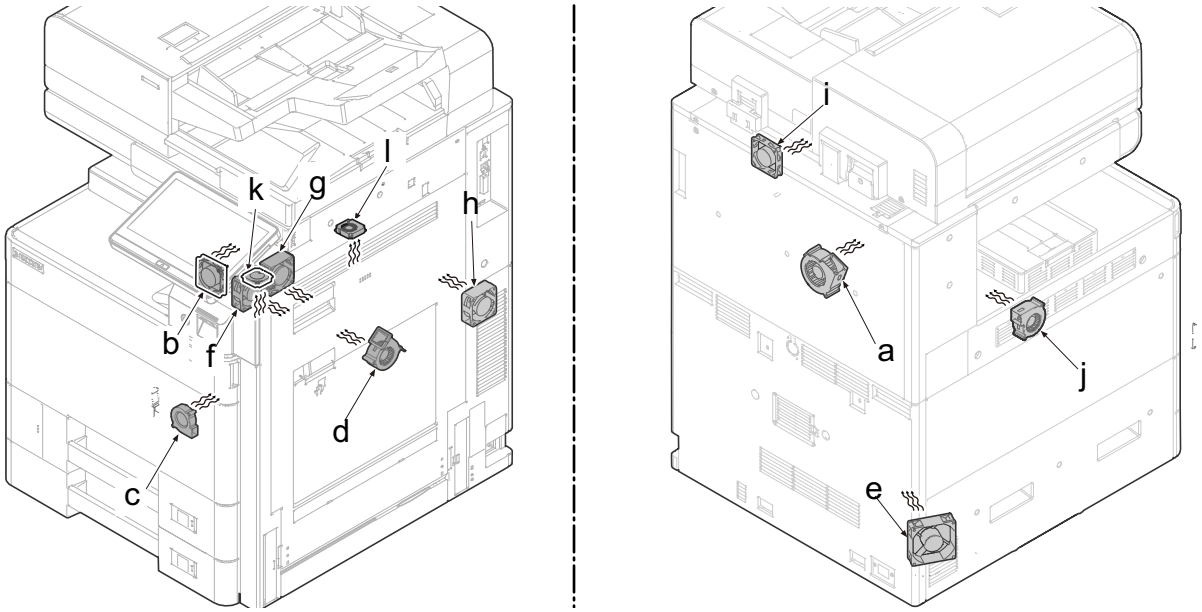

a.	IH PWB fan motor	intake *1	h.	Container fan motor 1	intake *1
b.	Container/Hopper fan motor	intake *1	i.	Exit fan motor	intake *1
c.	Developer fan motor K	intake *1	j.	Container fan motor	intake *1
d.	Fuser edge fan motor	intake *1	k.	Front exit fan motor (70 ppm model)	intake *1
e.	Power source fan motor	intake *1	l.	Rear exit fan motor (70 ppm model)	intake *1
f.	Exit/IH fan motor front	intake *1			
g.	Exit/IH fan motor middle	intake *1			

*1: Rating label side: The inside

(5)PWBs

IMPORTANT

Following procedures have to be done before PWB replacement.

Otherwise PWB gets broken.

- Unplug power code and press power switch for more than 1 second. (Remove electrical charge in main unit.)
- Do not press and hold the power switch more than 5 seconds continuously. Forcibly turning off the power may damage the HDD or the memory so that it causes the failure.

(5-1)Detaching and attaching the engine PWB

1 Remove a screw (a) (M3x10) and then remove the rear upper cover (b) by sliding in the direction of the arrow.

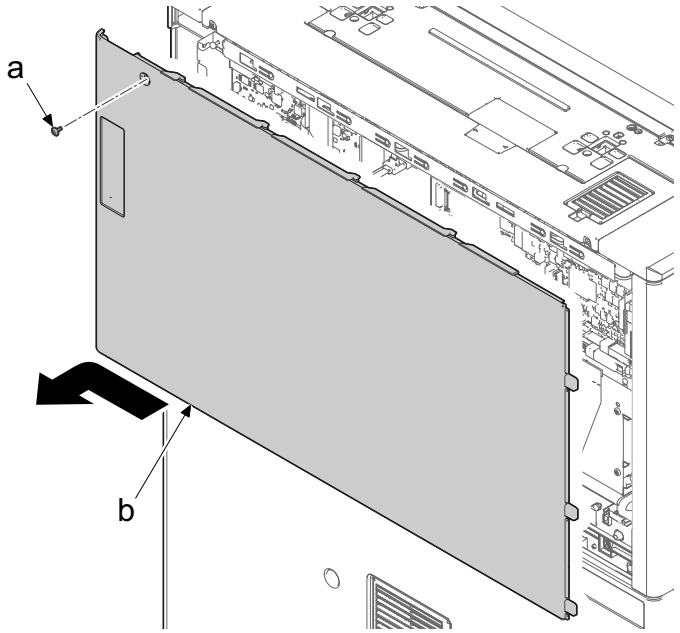

2 Remove the cable fastener from FFC (YC3).

3 Disconnect all the FFC and the connectors from the engine PWB (b).

4 Remove six screws (a) (M3x8) and then remove the engine PWB (b).

5 Check or replace the engine PWB (b), and then reattach the parts in the original position.

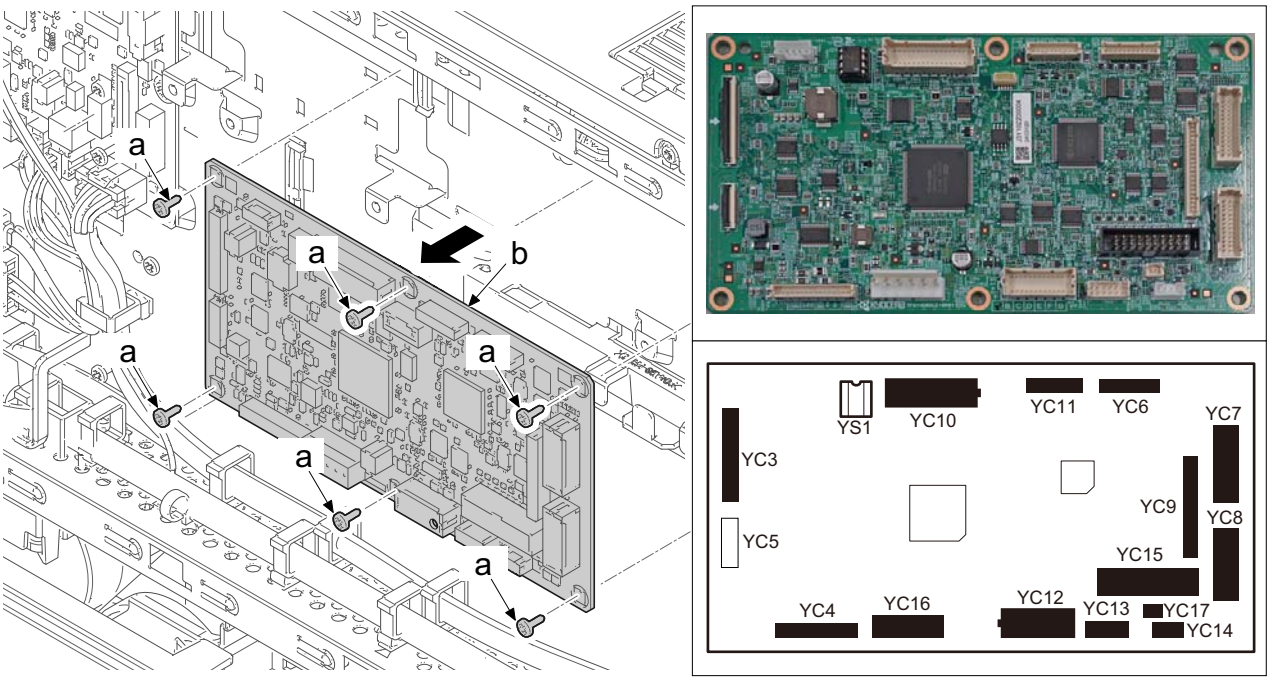

Notes for detaching

In the case that the FFC connector (YC3, YC5) has a lock, release the lock cover (a) and pull out the FFC (b).

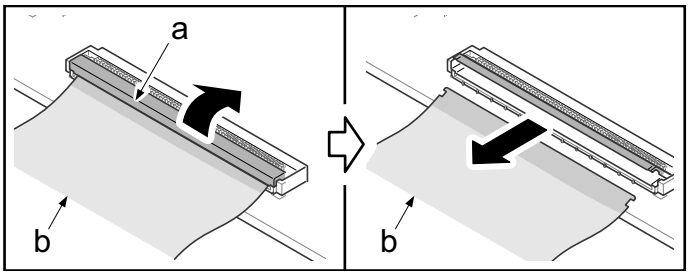

Notes for engine PWB replacement

- When replacing the engine PWB (a), make sure to remove the EEPROM (b) (YS1) from the old board and install it in the new board.
- Install the latest firmware after replacement.

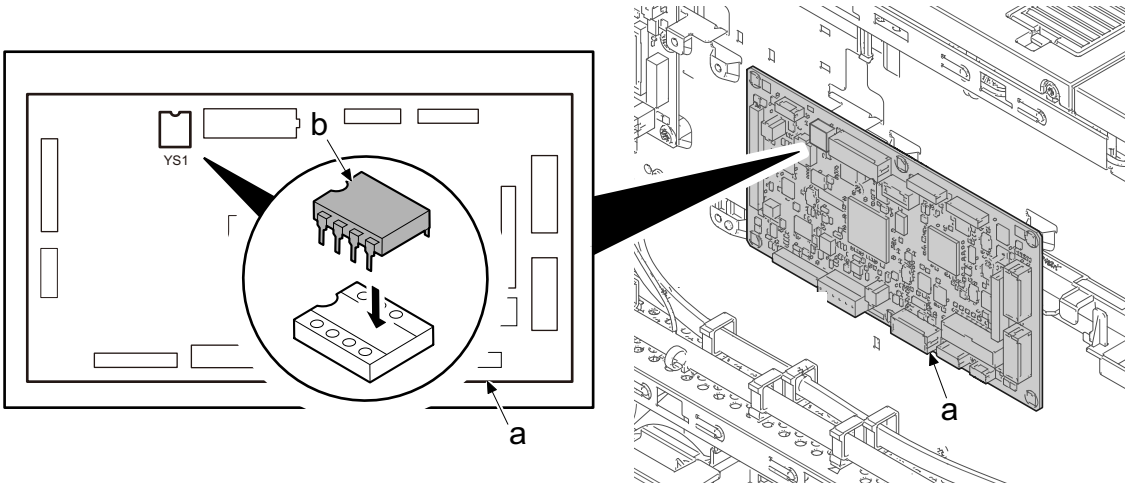

(5-2)Detaching and attaching the main PWB

Notes for main PWB replacement

- Output maintenance report in U000.
- Export machine information to USB memory with in U917.
- Remove the SSD on the main board and attach it to the new main board. (Refer to page 4-122)

IMPORTANT

Main unit does not work without SSD.

Do not replace the main PWB, engine PWB and SSD at the same time.

1 Remove a screw (a) (M3x10) and then remove the rear upper cover (b) by sliding in the direction of the arrow.

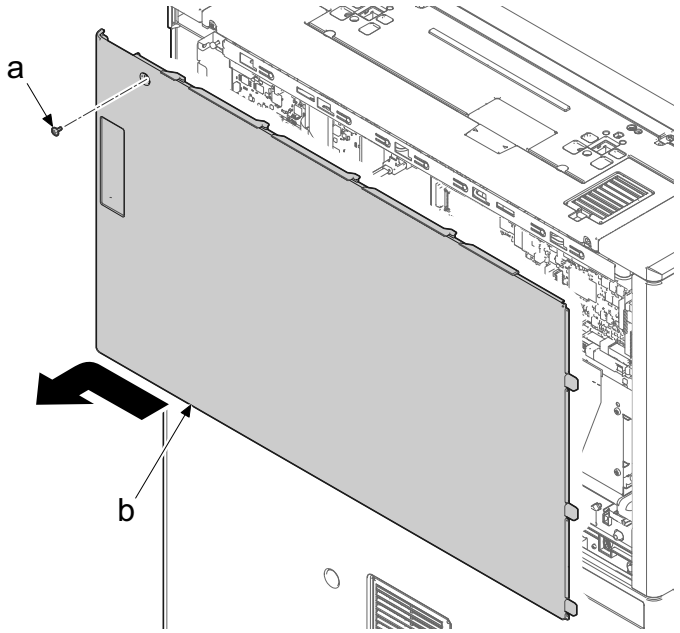

(Step 2 to 4 is for Document processor (CIS) only)

2 Disconnect the connector (b) from the DP relay PWB (a).

3 Remove three screws (a) (M3x8).

4 Detach the DP relay PWB (a) while removing the backside connector (d).

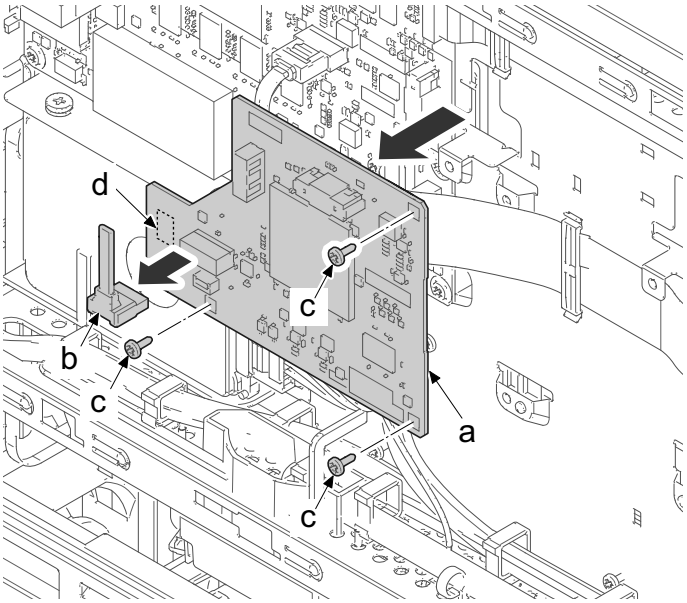

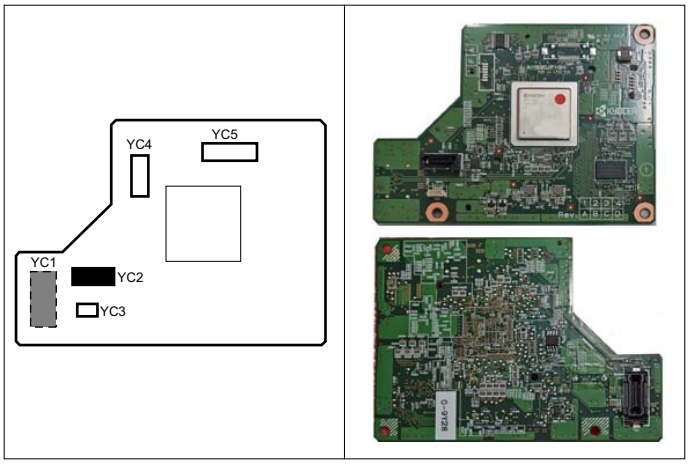

5 Remove the cable fastener from FFC (YC19,YC17).

6 Disconnect all the FFC and the connectors from the main PWB (a).

7 Remove eight screws (b) (M3x8) and remove the main PWB (a).

8 Check the main PWB (a) and clean or replace it if necessary.

9 Reattach the parts in the original position.

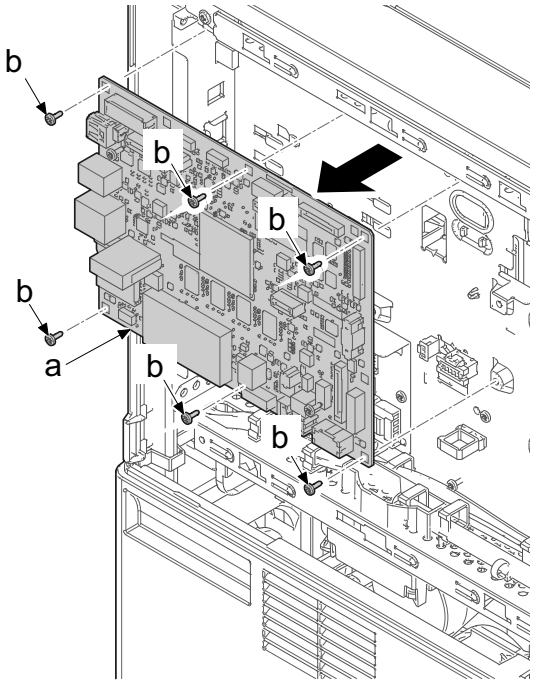

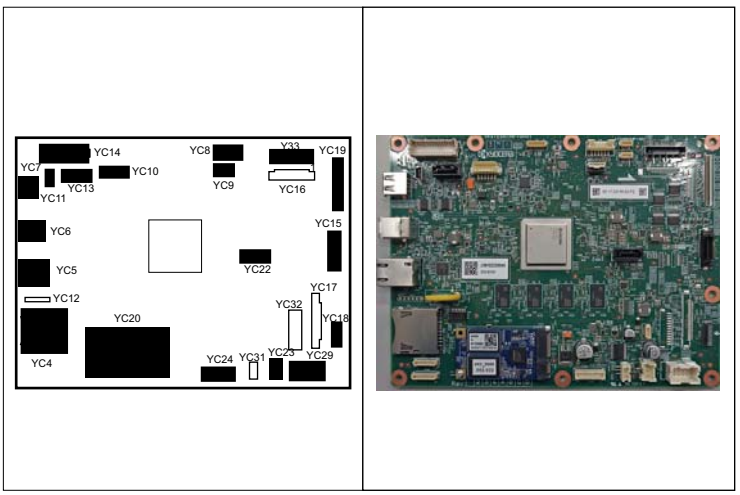

Notes for detaching

In the case that the FFC connector (YC19) has a lock, release the lock cover (a) and pull out the FFC (b).

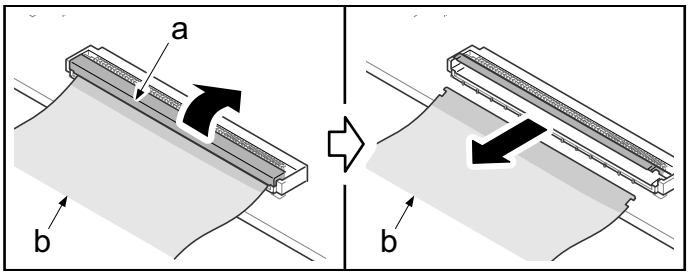

Connect FFC cable

In case of FCC replacement, prepare a set of FCC and 2 connectors, and follow the procedures below.

1 Connect FCC cable to connector (c) as shown in picture.

- Rib (c) on the center of connector has to be opposite side of conductive face of FCC.

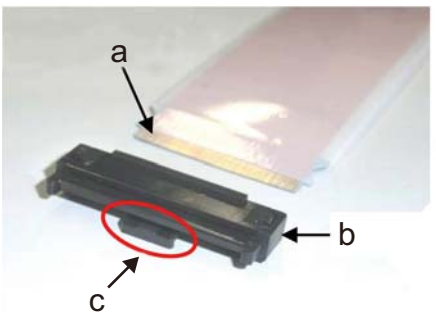

2 Place the FCC to slot (d) of the connector and push it in until conductive face comes to see.

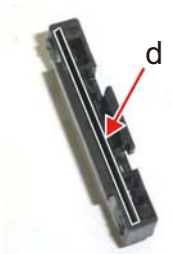

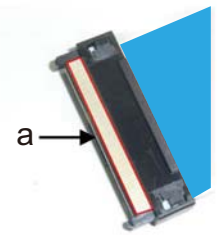

Execute the following setting after replacing the main PWB.

However, if "Data encryption / overwrite erasure" is turned on in the application, perform "When data encryption / overwrite erasure is set to ON" first, and then execute the following procedure.

).

1 Restore backup data on SSD.

- This has to be done before run U004.

Execute maintenance mode U026/ SSD/Restore

2 Restore exported machine settings and job settings by importing with U917 in advance.

3 Set Machine serial number

- C0180 error comes up when turn on machine since no serial number so that U004 has to be run to match the serial numbers in the PWBs.
  Execute it after confirming the engine PWB machine serial number matches the main unit serial number.
  Wrong data will be written when there is a discrepancy in U004.

1 Input "004" using the numeric keys and press [Start] key.

2 Select [Execute] and press [Start] key.

3 Turn the power switch off then on. Wait more than 5 seconds between the power off and on.

4 Firmware update (See page page 5-1)

- Check the latest firmware and upgrade it.

5 ID correction operation setting (maintenance mode U464): Calib

1 Input "464" using the numeric keys and press [Start] key.

2 Select [Calib].

3 Select [Execute] and press [Start] key.

- Calibration starts.

4 Press [Stop] key.

6 Auto halftone adjustment (maintenance mode U410)

1 Input "410" using the numeric keys.

2 Select [Coeciffient].

3 Select [Initialize] and press the [Start] key.

- The correction value will be initialized.

4 Press [Stop] key.

- Execution information screen is displayed.
- Test chart 1, 2 and 3 are output on the A4/Letter paper.

5 Place the test chart 1 on to platen glass table with face down and arrow side far.

- Put approximately 20 sheets of white paper on to the chart.

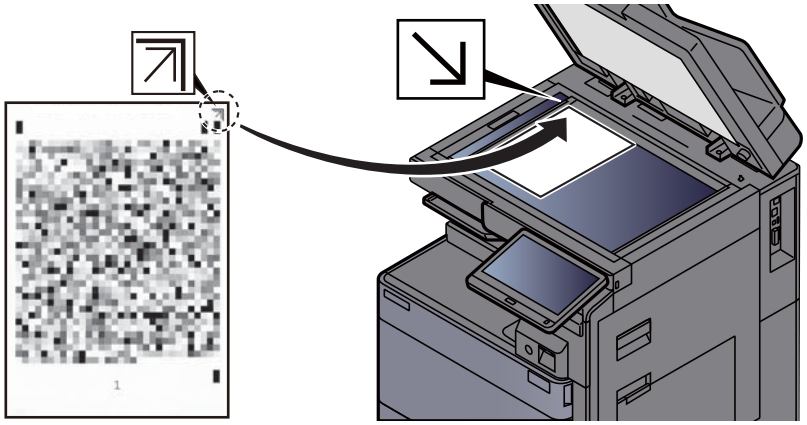

6 Press [Start] key.

- The 1st auto adjustment is executed.

7 Once [OK] comes up then continue with chart 2 and 3 repeating step 2 to 3.

8 [Finish] displays after normal completion.

7 Resetting the initial settings

- Input setting from maintenance report (U000) that output in advance.

No.	Maintenance mode relating to the main unit
U250	Maintenance counter preset
U251	Maintenance counter clear
U253	Double/single count switch
U260	Feed/exit counter switch
U345	Maintenance timing pre-caution setting

U251: Cassette counter

U265: Destination setting

U065: Main Scan adjustment value

U402: Margin setting value

Other setting that is changed in setup

- Registration for net work certification
- In case of displaying customize screen U224: Home screen install
- Set interface block function or security level setting from [System Menu] in case that those are changed from default.
- In case of install Security Kit, Input the key code.
- Set network since MAC address (Printer name) gets changed.

8 Exiting from the maintenance mode

Input "001" using the numeric keys and press [Start] key.

When data encryption / overwrite erasure is set to ON

CAUTION

When replacing the main PWB, the files and fax reception of the box stored in the SSD / HDD and the main unit memory will be erased and cannot be restored.

"HDD mounting machine"

1 Turn off the power switch and unplug the power plug.

2 Replace the main board.

3 Connect the power plug and turn on the power switch.

- Display C640.

4 Select [Flash] in "U026 backup data restoration" and execute [Restore].

5 Turn the power switch off then on. Wait more than 5 seconds between the power off and on.

- Display C640 again.

6 Turn the power switch off then on. Wait more than 5 seconds between the power off and on.

- Display C180.

7 Execute "U906 Fault isolation reset".

8 Turn the power switch off then on. Wait more than 5 seconds between the power off and on.

- Display C640.

9 Write the serial number of the main PWB with "U004 Machine number".

10 Turn the power switch off then on. Wait more than 5 seconds between the power off and on.

11 Activate on the encryption code input screen.

12 Turn the power switch off then on. Wait more than 5 seconds between the power off and on.

- The HDD is automatically formatted.

13 Turn the power switch off then on. Wait more than 5 seconds between the power off and on.

14 Then return to the above procedure and perform steps 1 (page 4-154) to 8.

"No HDD installed (SSD only)"

1 Turn off the power switch and unplug the power plug.

2 Replace the main board.

3 Connect the power plug and turn on the power switch.

- Display C660.

4 In "U026 backup data restoration" select [Flash] and execute [Restore].

5 Turn the power switch off then on. Wait more than 5 seconds between the power off and on.

- Display C660 again.

6 Write the serial number of the main PWB with "U004 Machine number".

7 Turn the power switch off then on. Wait more than 5 seconds between the power off and on.

8 Activate on the encryption code input screen.

9 Turn the power switch off then on. Wait more than 5 seconds between the power off and on.

- Display C660.

10 Select [SSD Format] in "U024 HDD Format" and perform full format.

11 Turn the power switch off then on. Wait more than 5 seconds between the power off and on.

- The SSD is automatically formatted.

12 Turn the power switch off then on. Wait more than 5 seconds between the power off and on.

13 Then return to the above procedure and perform steps 1 (page 4-154) to 8.

(5-3)Detaching and attaching the front drive PWB

1 Open the front cover (a) slightly.

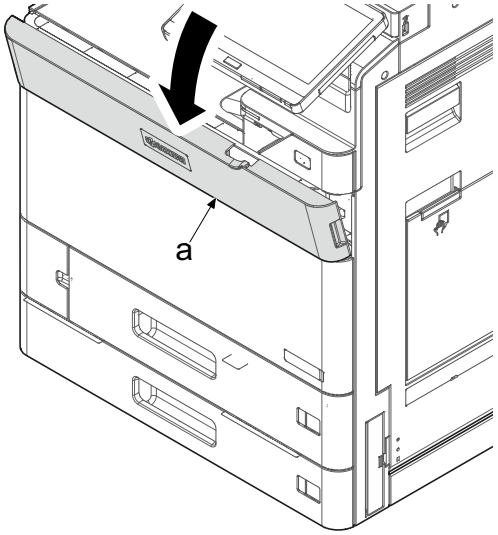

2 Open the front cover (a) and then open the front cover for maintenance (b) while grasping the upper left and right part.

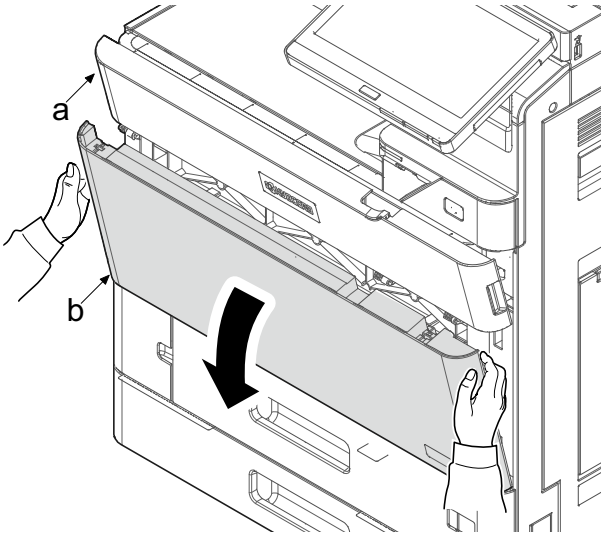

3 Open the front cover (a).

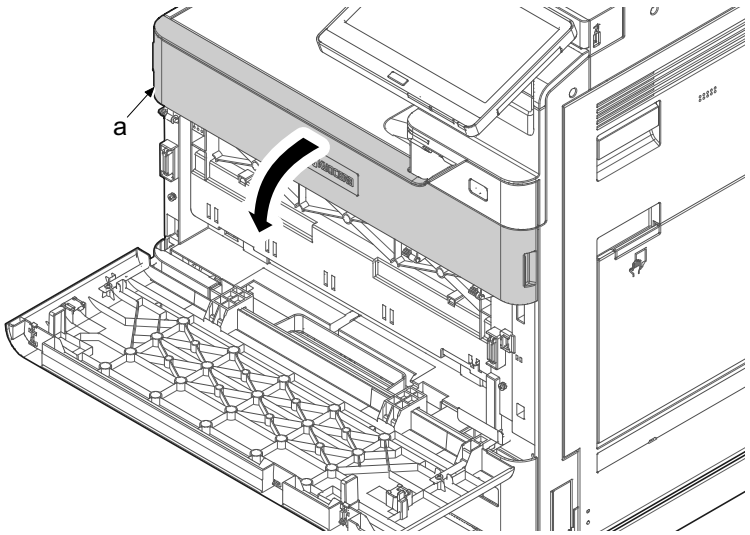

4 Release two hooks (b) of magnet (a) for cover by using flat screwdriver (c) and remove.

5 Remove the container outer cover (d) by using removed magnet (a).

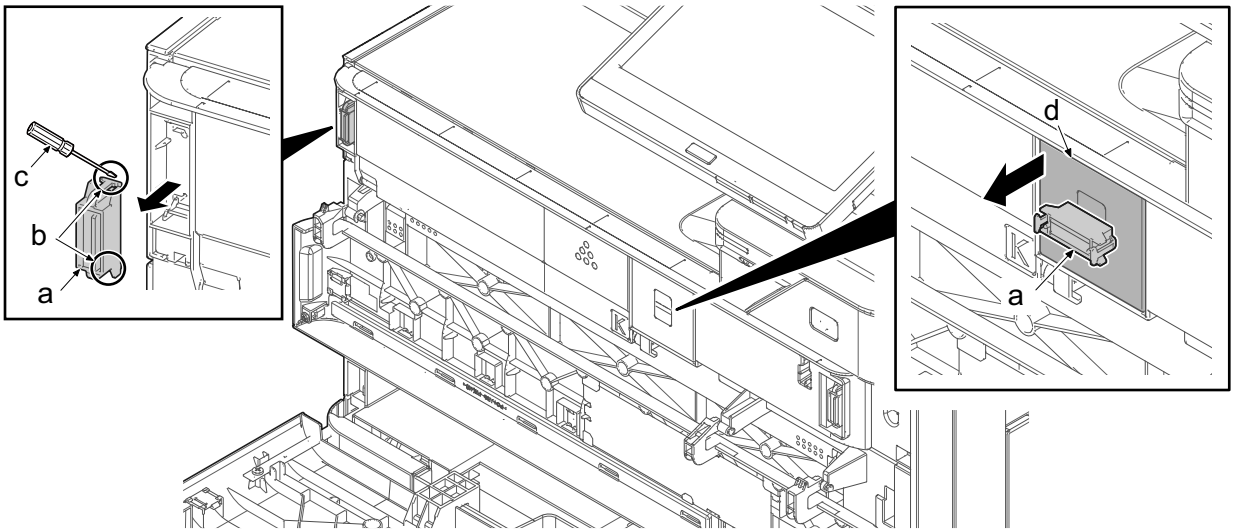

6 Release the lever (a) then open the container cover (b).

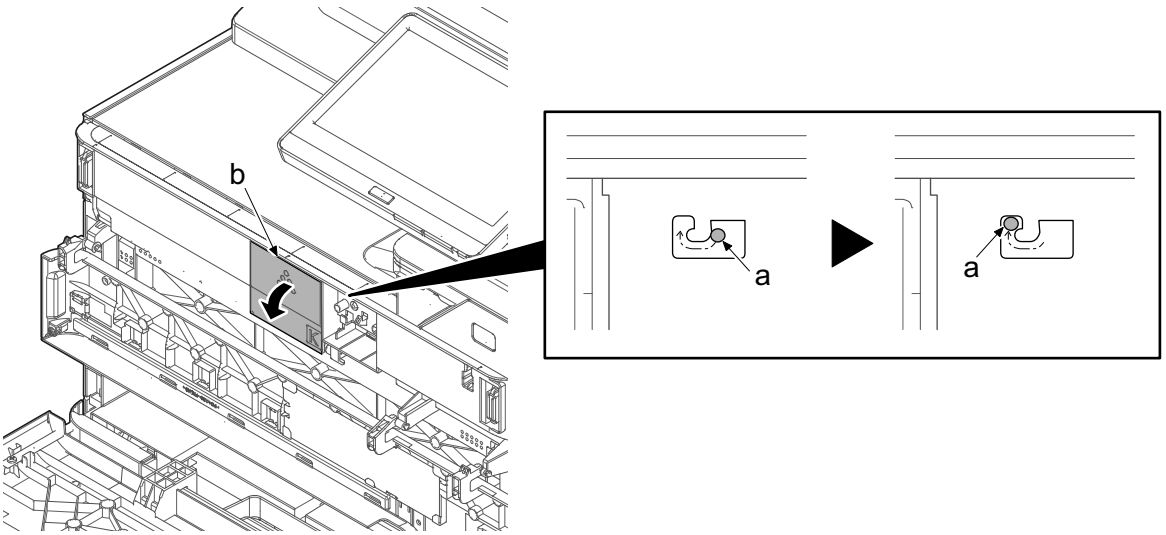

7 Remove the toner container (a) of four colors.

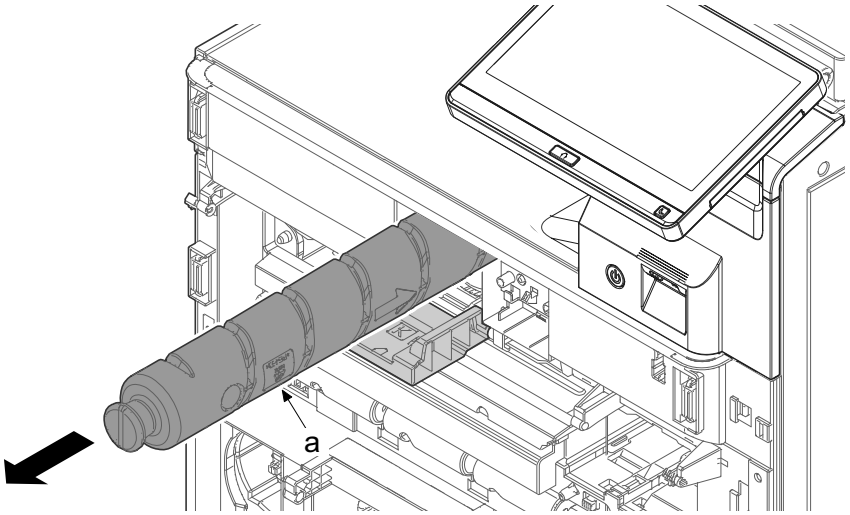

8 Remove the connector (a).

9 Remove three screws (b) then front container cover (c).

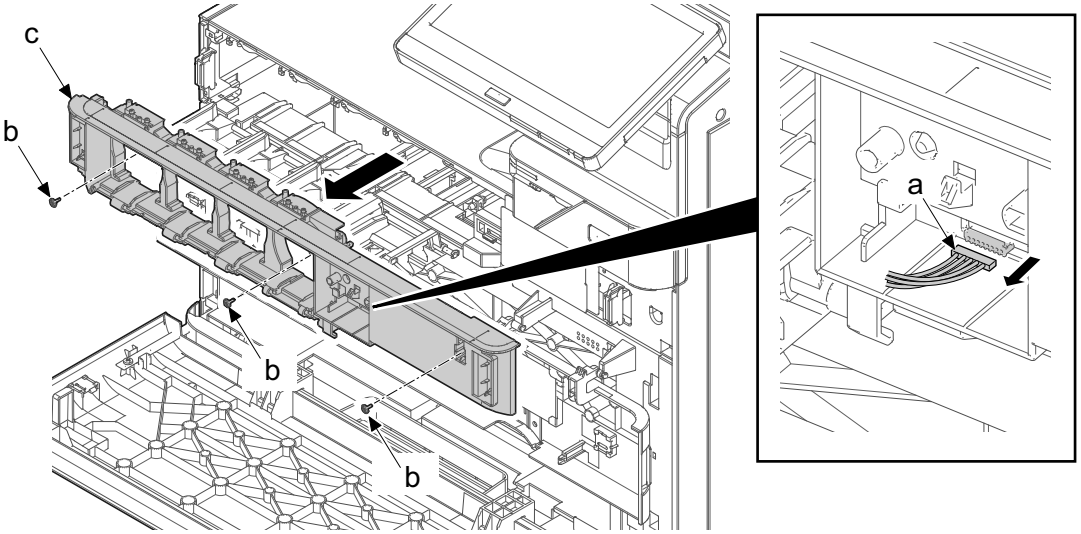

10 Remove all connector from the front DRIVE PWB (a).

11 Remove four screws (b) then remove the front DRIVE PWB (a)

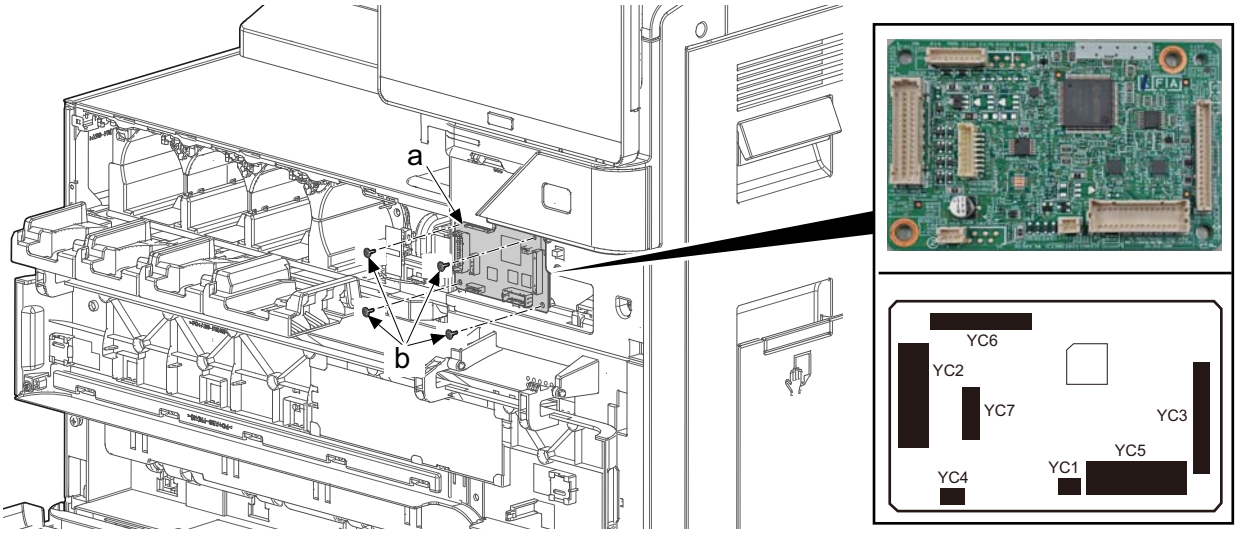

(5-4)Detaching and attaching the main high voltage PWB

1 Remove a screw (a) (M3x10) and then remove the rear upper cover (b) by sliding in the direction of the arrow.

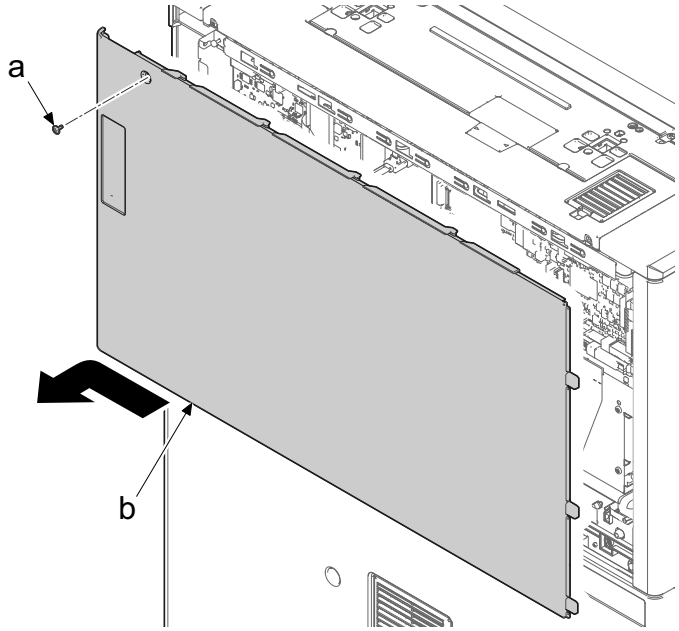

2 Remove two screws (a) (M3x10).

3 Push down the rear lower cover (b), release the upper rib, lift in slightly opened state and release the lower hook (c). After that, detach it in the direction of the arrow.

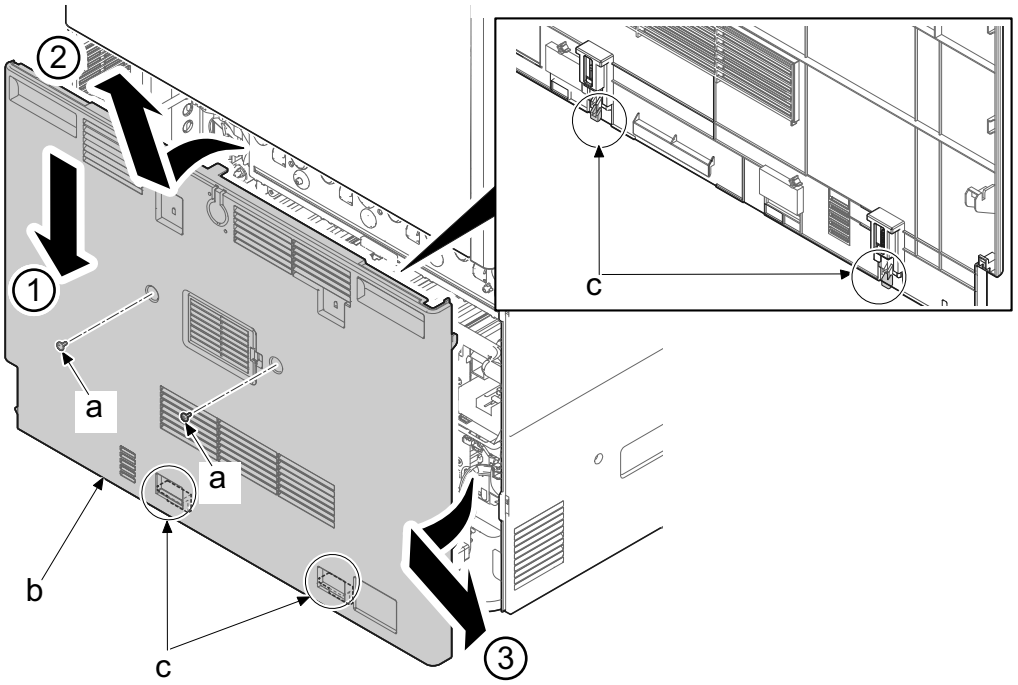

4 Remove three screws (a) (M3x8).

5 Detach the rear stay (b).

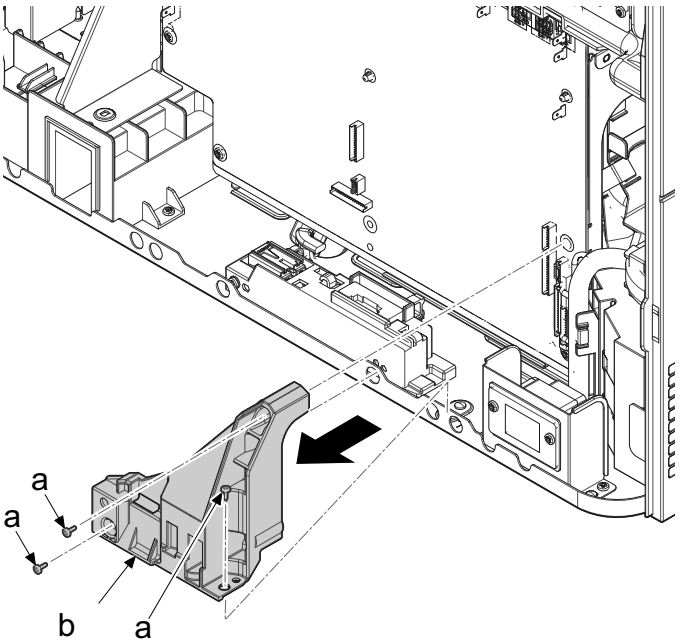

6 Disconnect all the connectors from the main high voltage PWB (a).

7 Remove five screws (b) (M3x8).

8 Release three board supports (e).

9 Release two hooks (c) at the left and right side.

10 Release three upper side hooks (d) and remove the main high voltage PWB (a).

11 Check or replace the main high voltage PWB (a), and then reattach the parts in the original position.

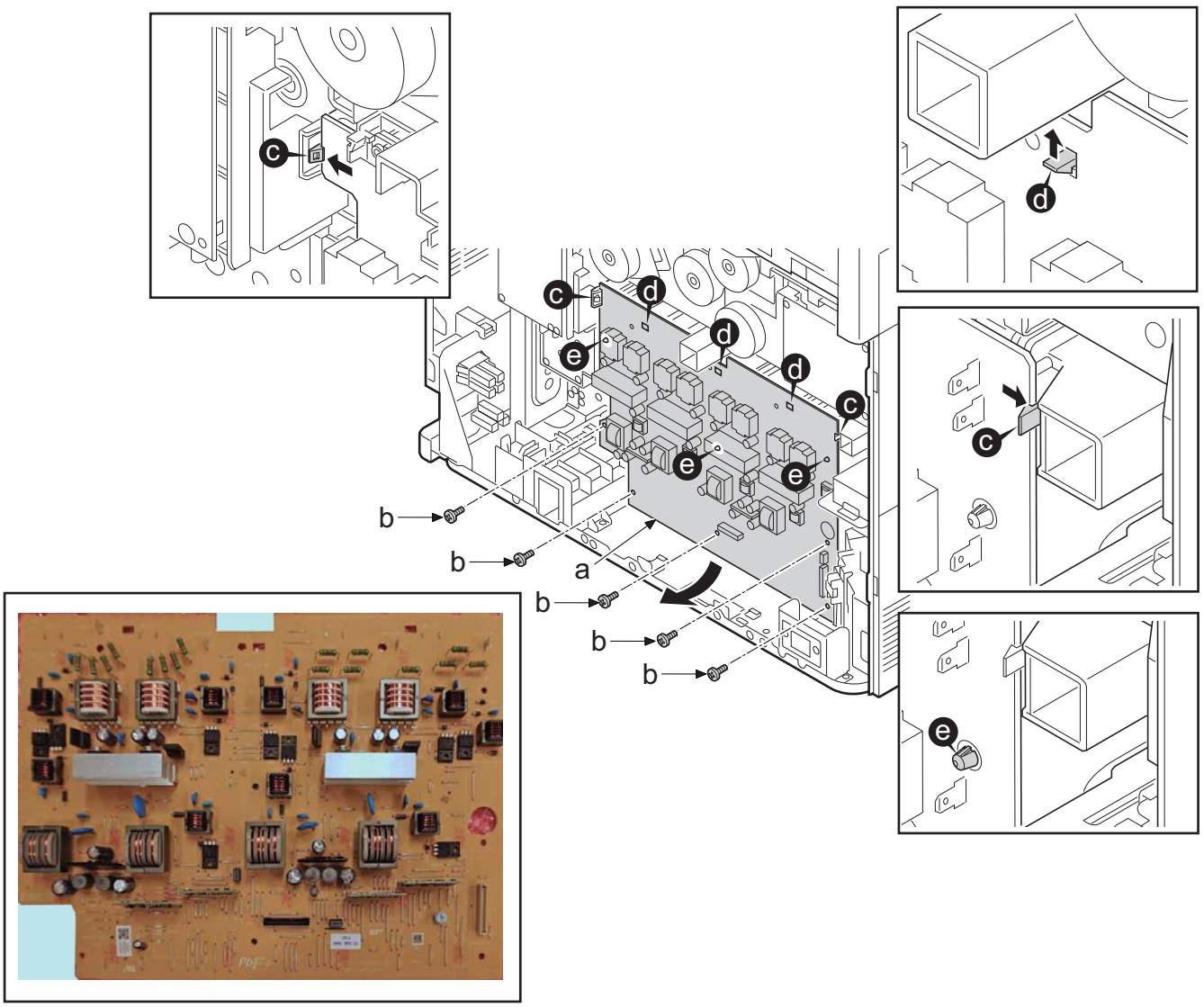

(5-5)Detaching and reattaching the transfer high voltage PWB

1 Remove a screw (a) (M3x10) and then remove the rear upper cover (b) by sliding in the direction of the arrow.

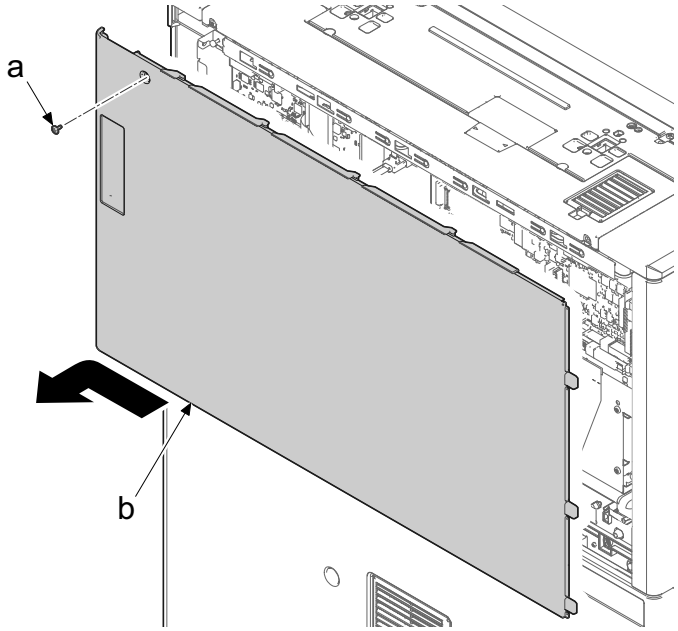

2 If DP is installed, Open it.

3 Remove two screws (a) (M3x8).

4 Remove the DP rear cover (b) in the direction of the arrow.

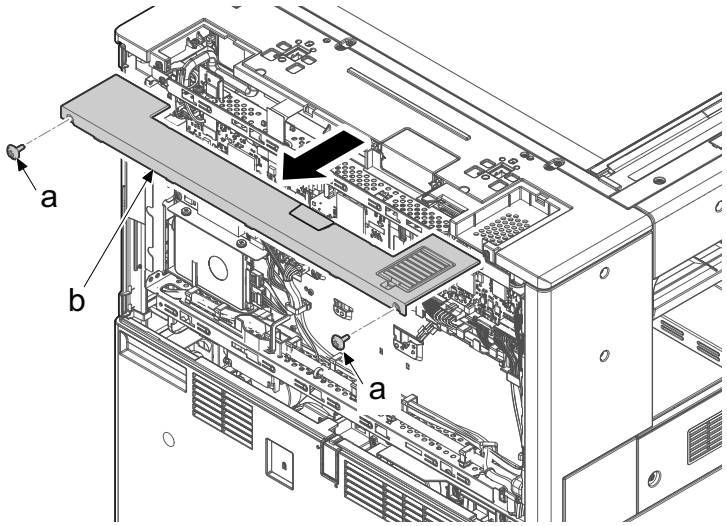

5 Remove two screws (a) (M3x8).

6 Release two hooks (c) and remove the left rear cover (b) in the direction of the arrow.

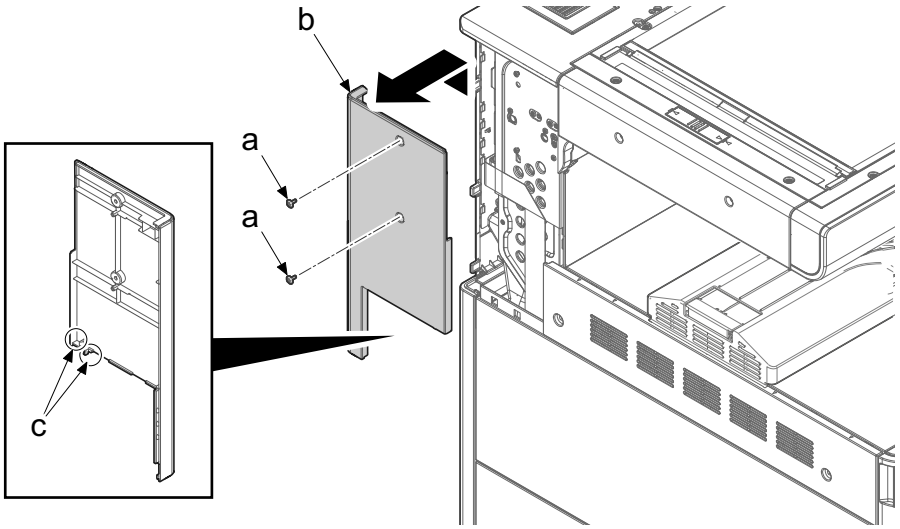

7 Open the right cover (a) of the main unit (b).

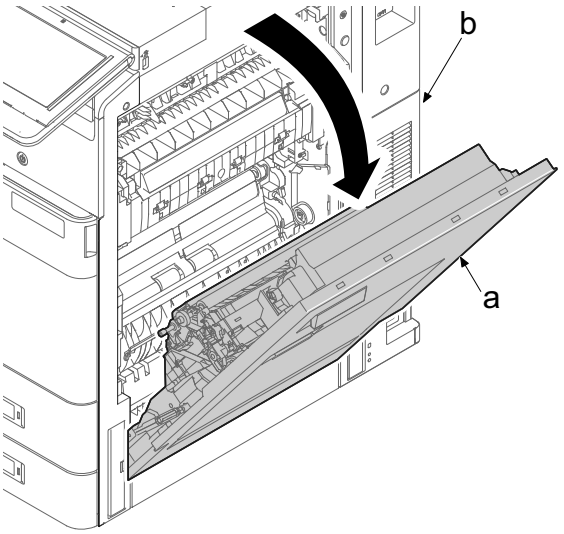

8 Remove two screws (a) (M3x8).

9 Release the hooks (b) and remove the right rear top cover (c).

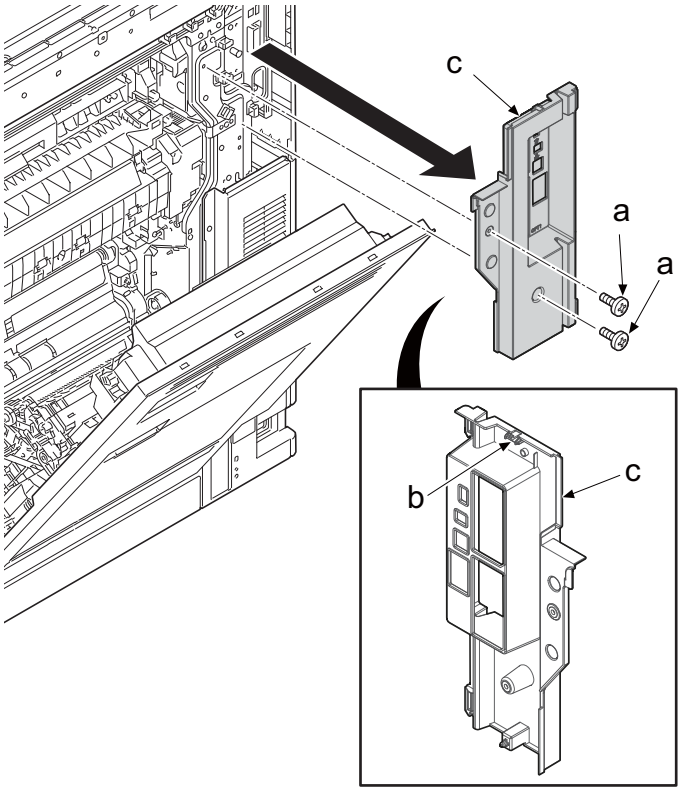

10 Release four connectors (b) from the main PWB (a) and draw from the aperture (e). Remove the wire (c) from two wire saddles (d).

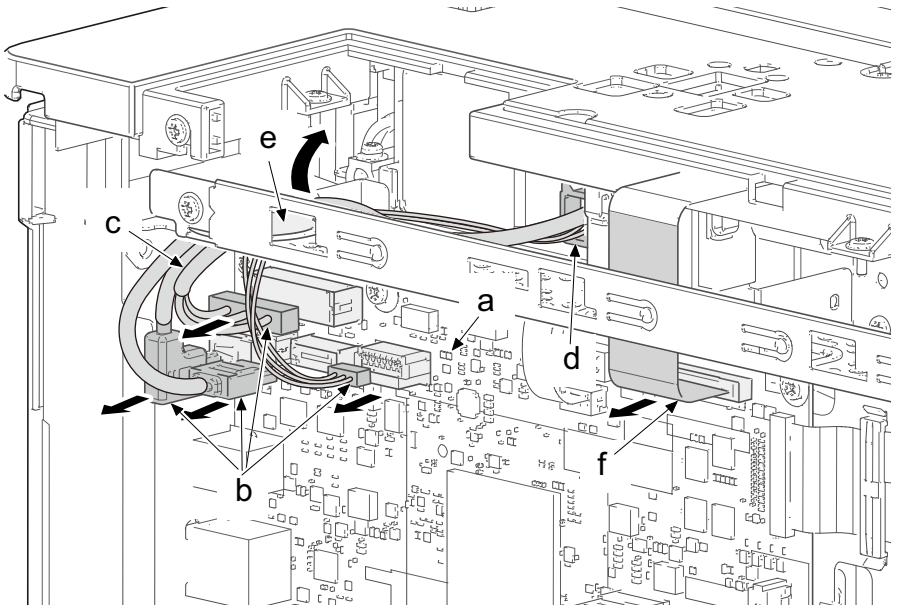

11 Disconnect the FFC and the connector from the engine PWB.

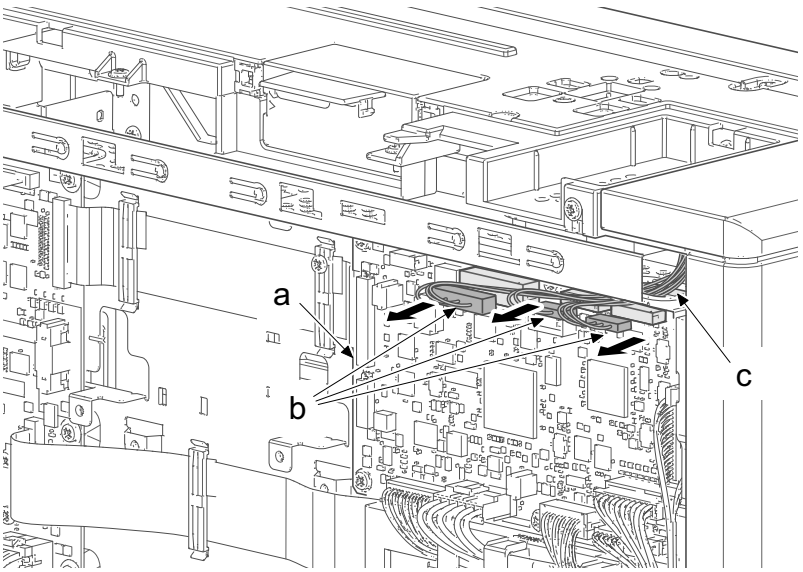

12 Remove two screws (a) (M3x8).

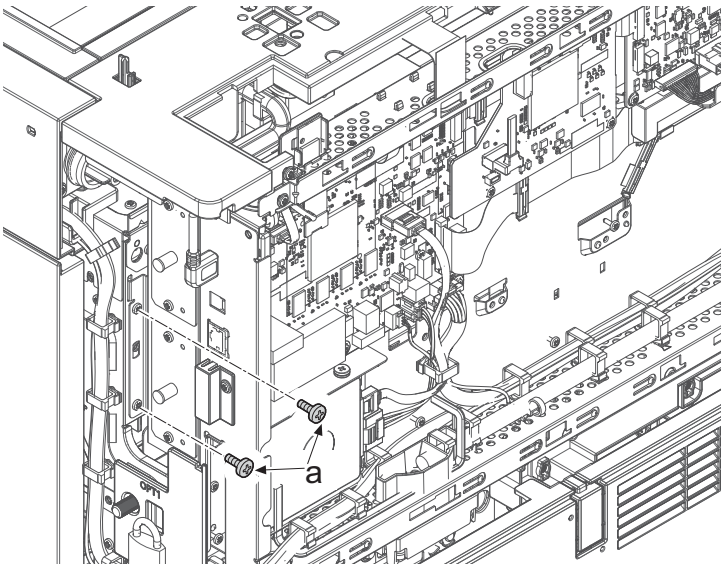

13 After lifting the shield box (a), draw it and release the hooks (b).

14 Open the shield box (a).

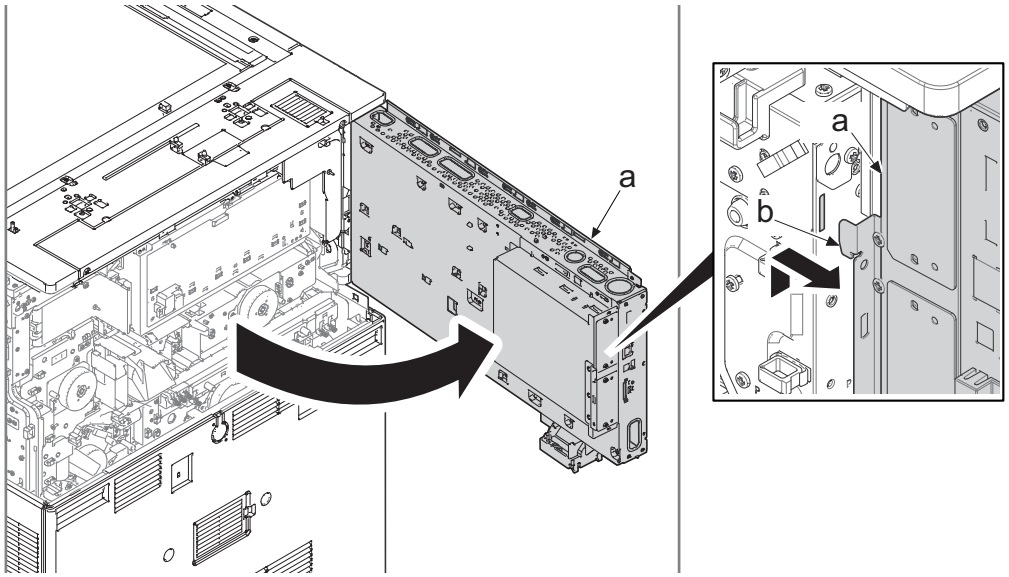

CAUTION

In case of operating at the rear lower side of the machine opening the shield box, pay attention not to hit your head to the shield box.

15 Remove the connector (b) from the container motor (a). Remove ten connectors (d) from image drive PWB (c).

16 Remove the wire (e) from the five wire saddles (f).

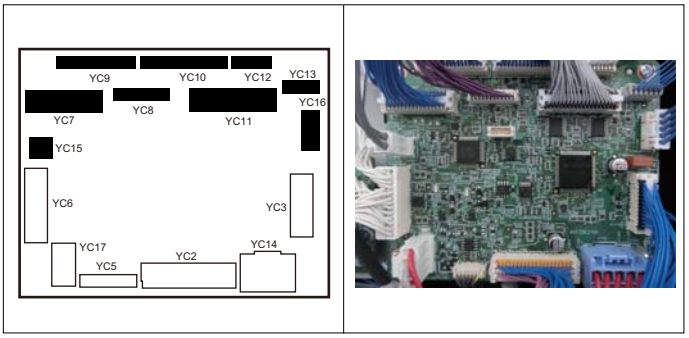

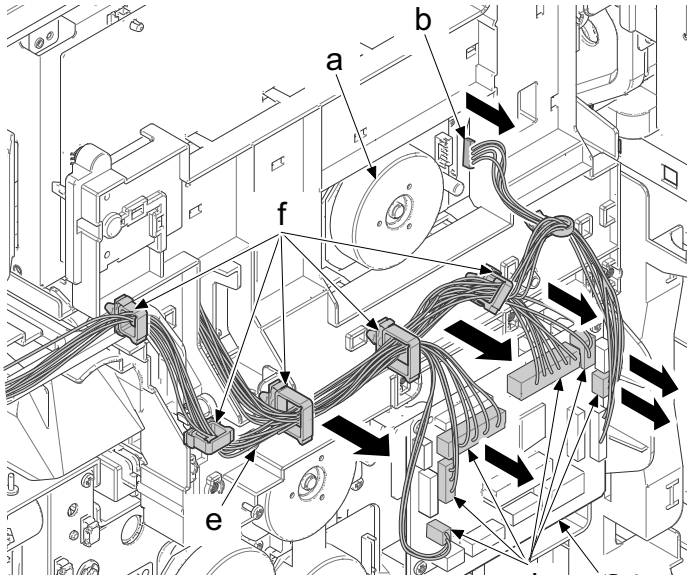

17 Remove two screws (a) (M3x8).

18 Unlatch six upper side hooks (c) with a flat-blade screwdriver (b) and then four lower side hooks (c), and then remove the transfer terminal cover (d).

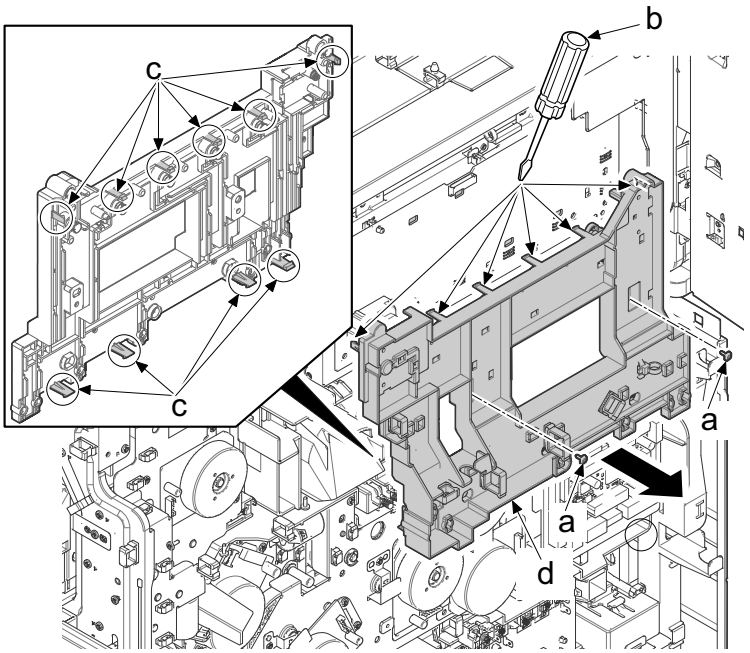

IMPORTANT

When attaching the transfer terminal cover (a), make sure that the rib (b) is between two terminals. (Eight locations)

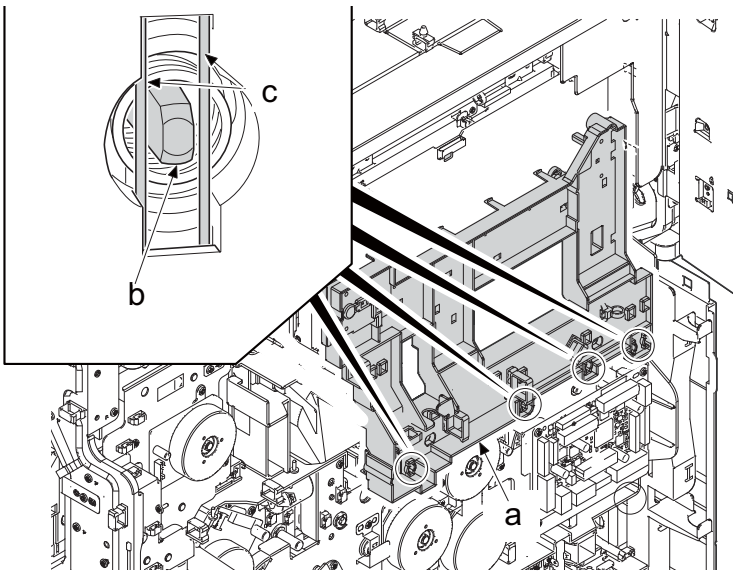

19 Disconnect one connector (b) from the transfer high voltage PWB (a).

20 Remove two screws (c) (M3x8).

21 Release two board supports (b) and remove the transfer high voltage PWB (a).

22 Check or replace the transfer high voltage PWB (a), and then reattach the parts in the original position.

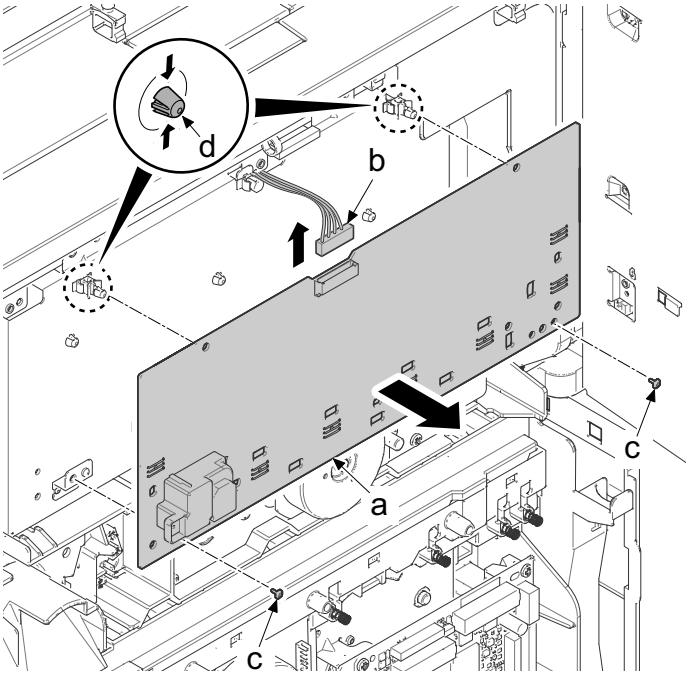

(5-6)Detaching and attaching the Power supply PWB

CAUTION

Even after power off and unplug, some capacitors on power supply board may still have electro charge, so pay attention not to touch those parts.

1 Remove two screws (a) (M3x10).

2 Push down the rear lower cover (b), release the upper rib, and release the lower hook (c) lifting the cover. After that, detach it in the direction of the arrow.

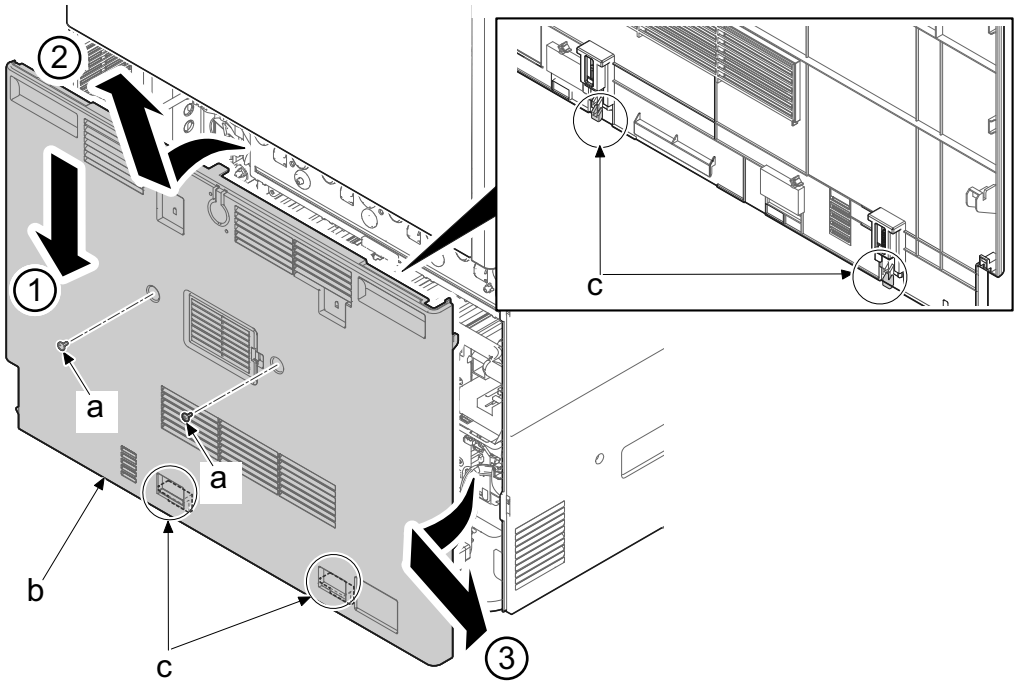

3 Remove three screws (a) (M3x8).

4 Detach the rear stay (b).

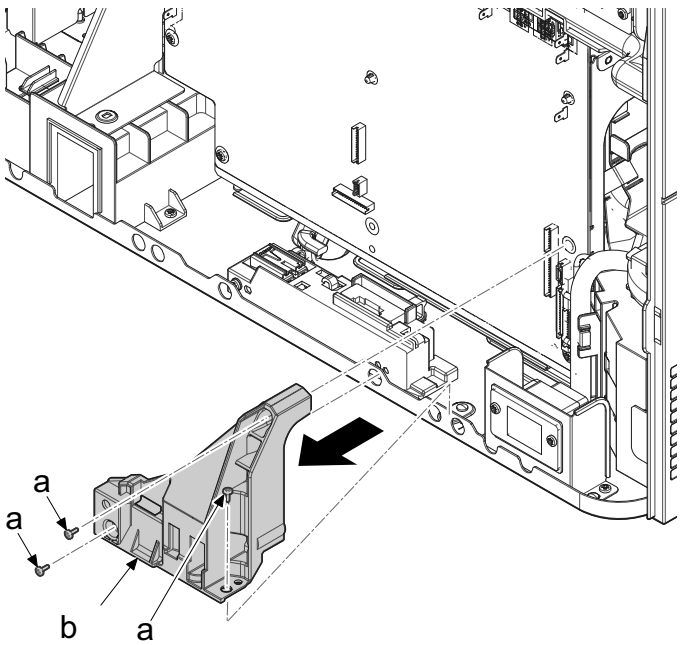

5 Disconnect two connectors (a).

6 Remove the screw (b) (M4x6) and remove the ground terminal (c).

7 Remove the wire saddles (d).

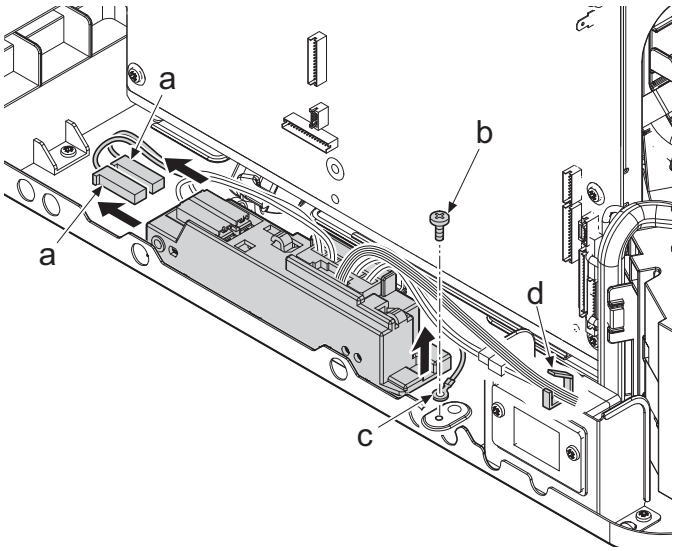

8 Remove one screw (a) (M3x8).

9 Take PF drawer holder (c) away with pulling to release from grooves (d).

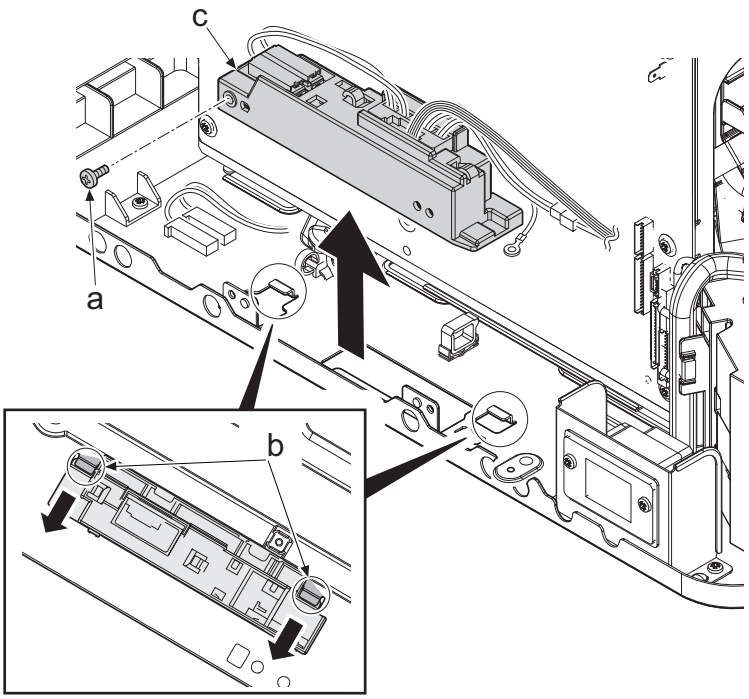

IMPORTANT

When attaching the PF drawer holder (c), make sure to hang it to the two grooves (b).

10 Disconnect all the connectors from the main high voltage PWB (a).

11 Remove five screws (b) (M3x8).

12 Release three board supports (e).

13 Release two hooks (c) at the left and right side.

14 Release three upper side hooks (d) and remove the main high voltage PWB (a).

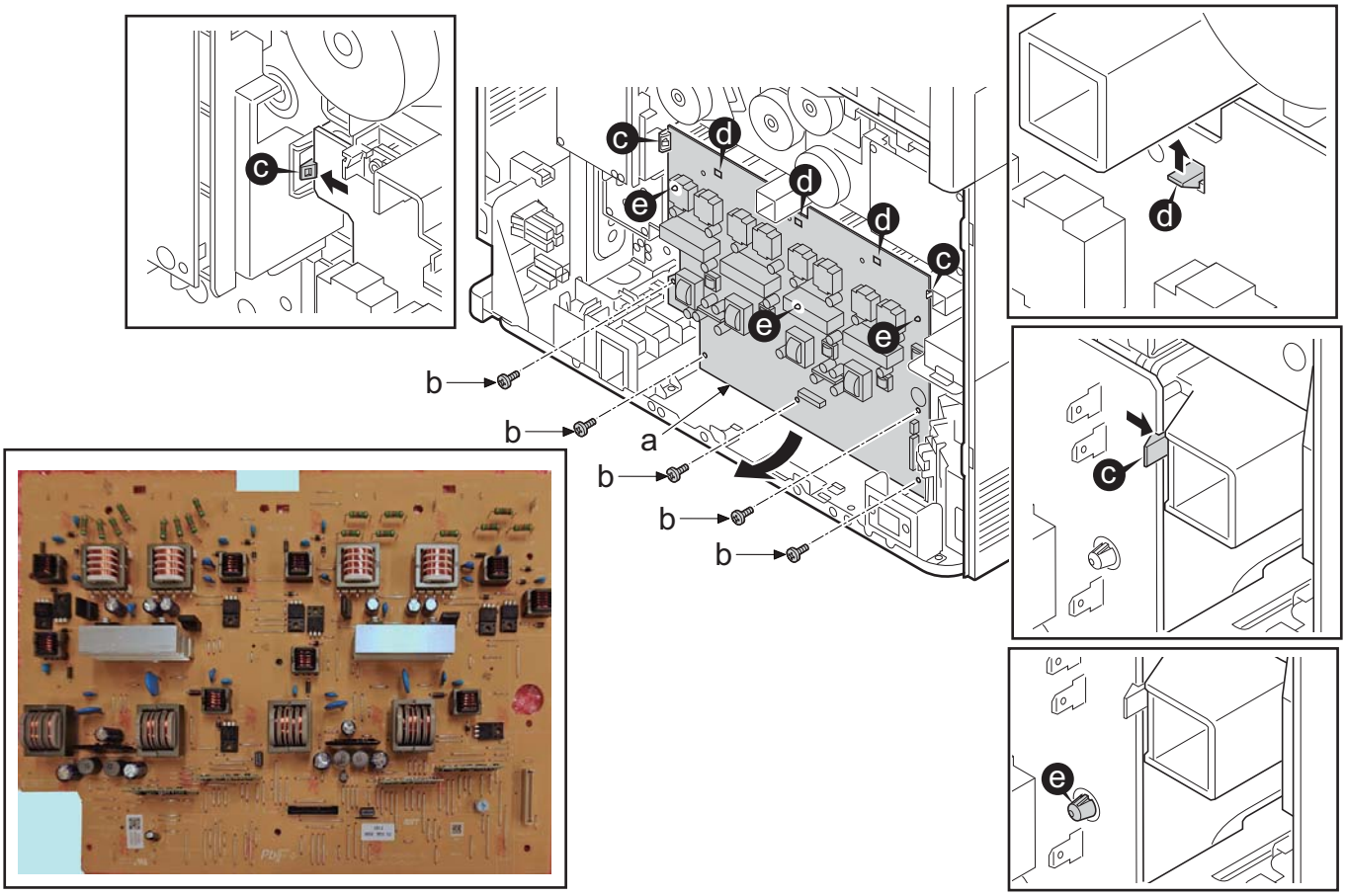

15 Remove two screws (a) (M3x8) and remove the shield lid (b).

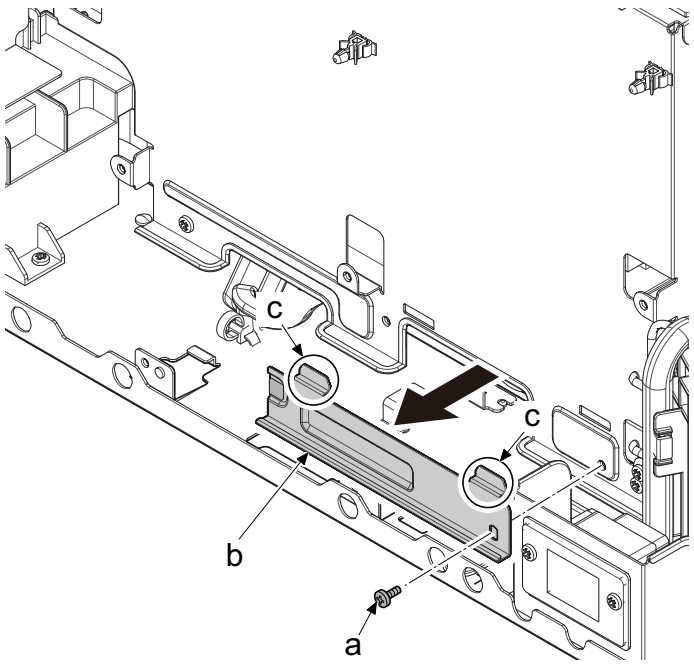

16 Remove four screws (a) (M3x8).

17 Rotating to unplug the lower side in advance and remove the power shield (b).

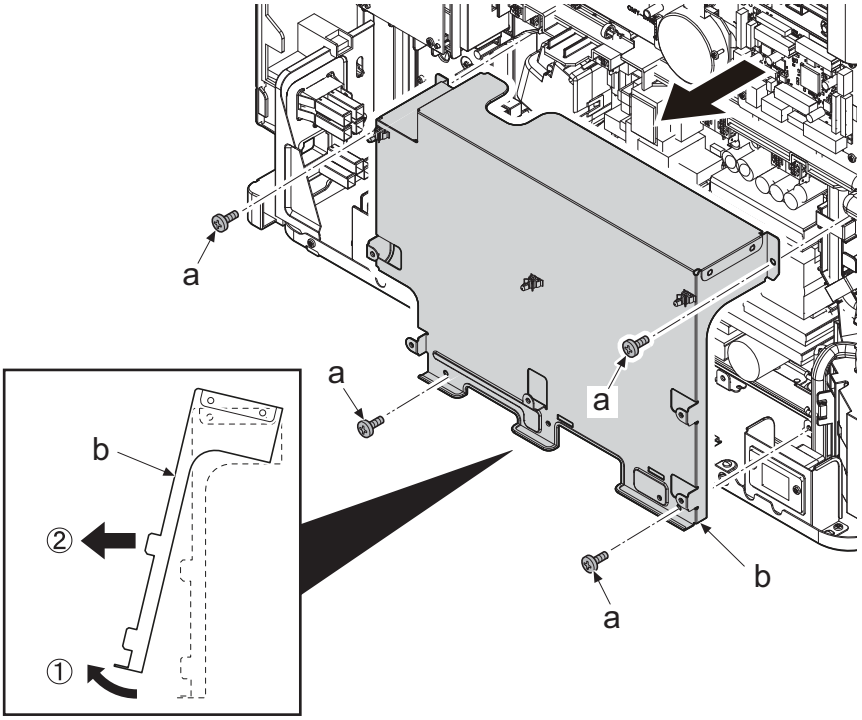

18 Disconnect all the connectors from the Power supply PWB (a).

19 Remove five screws (b) (M3x8).

20 Release two board supports (c) and remove the Power supply PWB (a).

21 Check or replace the Power supply PWB (a), and then reattach the parts in the original position.

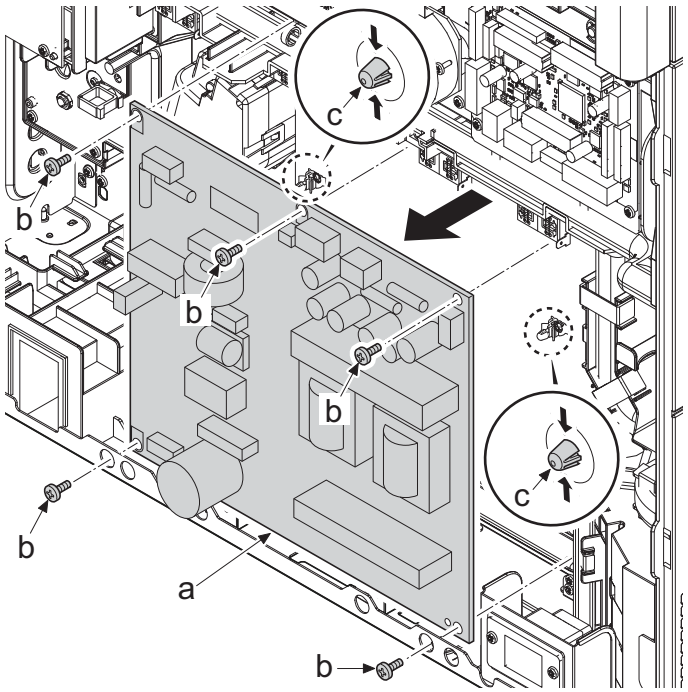

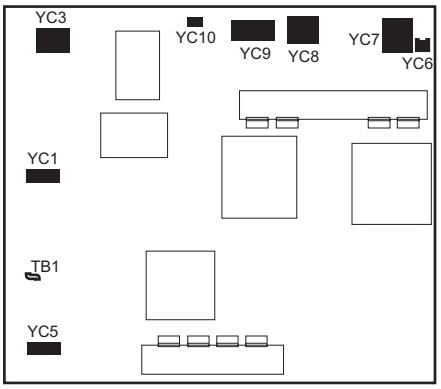

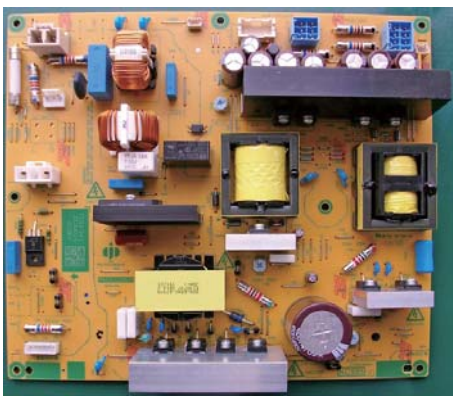

(5-7)Detaching and attaching the IH PWB

1 Lift up operation panel (a).

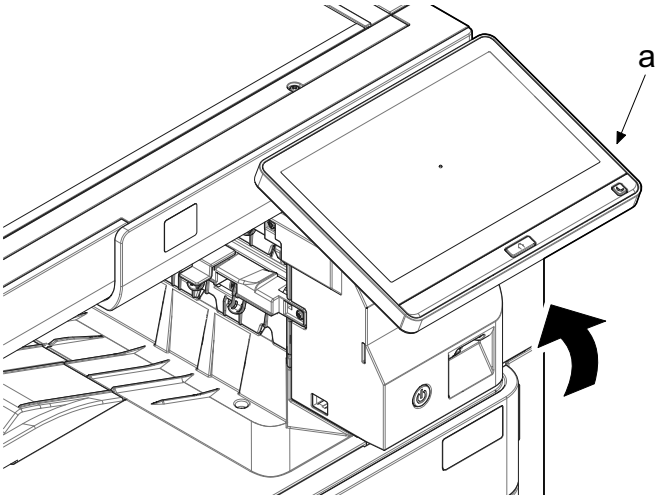

2 Lift up the lever (b) of the sub tray (a) and release the lock then lift up the machine rear side (c) and slide it to the front side.

3 Lift up the pin (d) and remove it then detach the sub tray (a).

4 Remove one screw (e) (M3×8).

5 Remove connector cover (f).

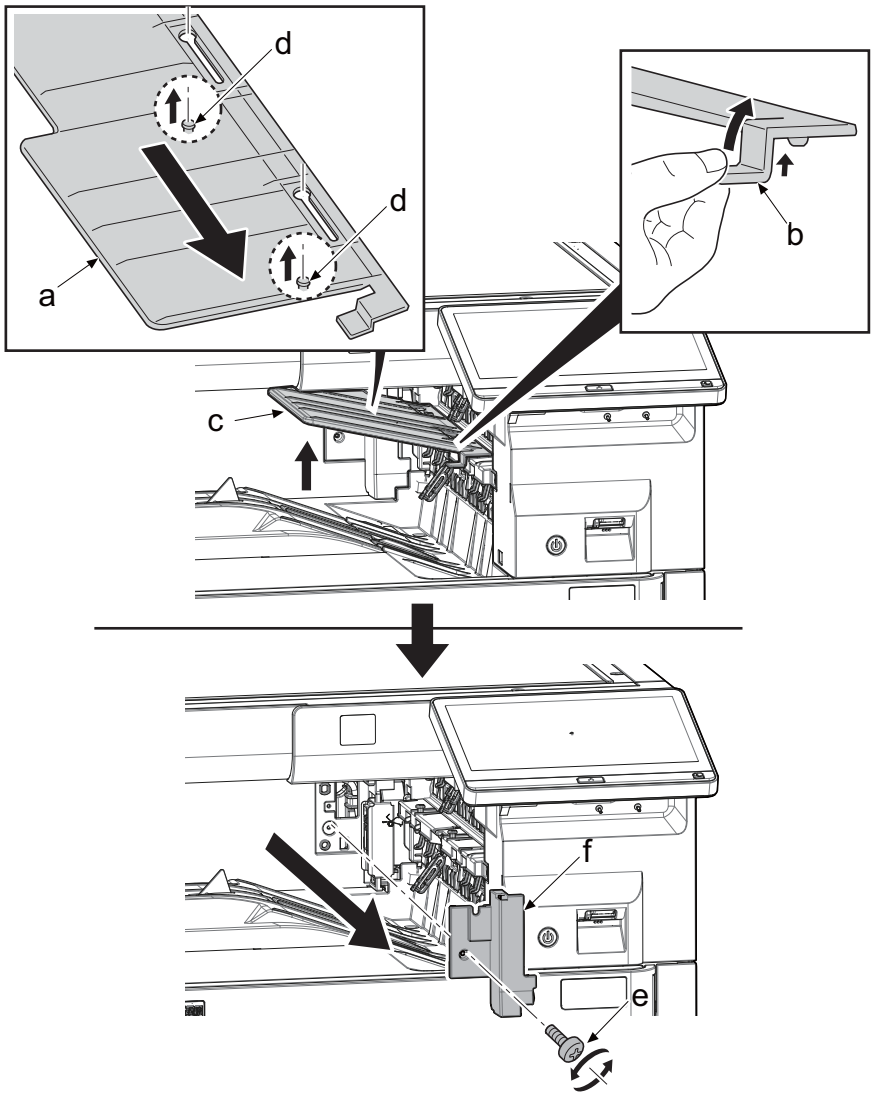

In case that the job separator is installed

1 Remove one screw (a) (M3x8).

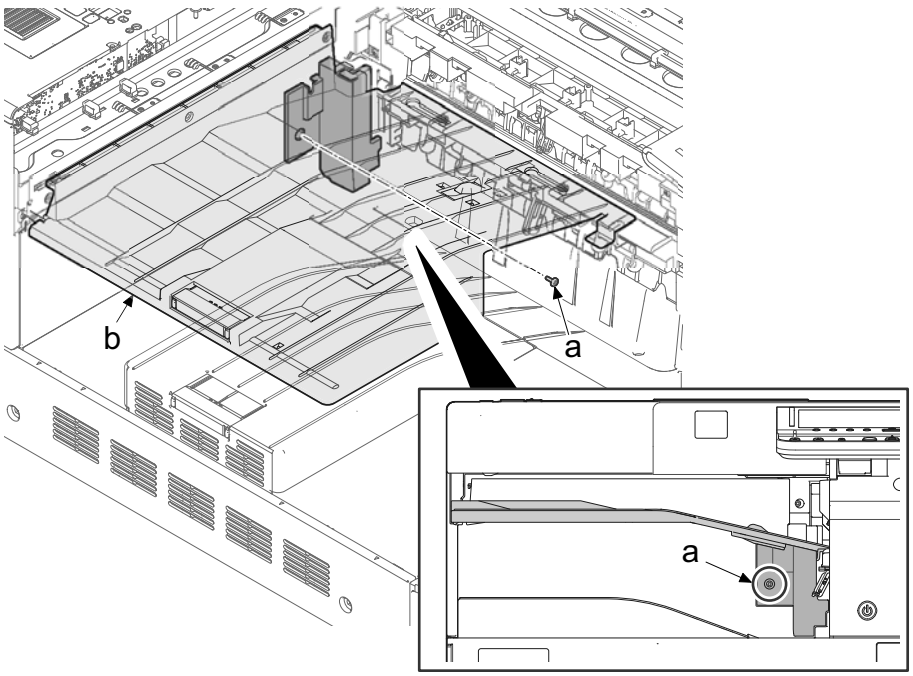

2 Lift the lever (b) of the upper tray (a), release the lock, slide in the direction of the arrow, unplug pin (c) and remove in the direction of the arrow.

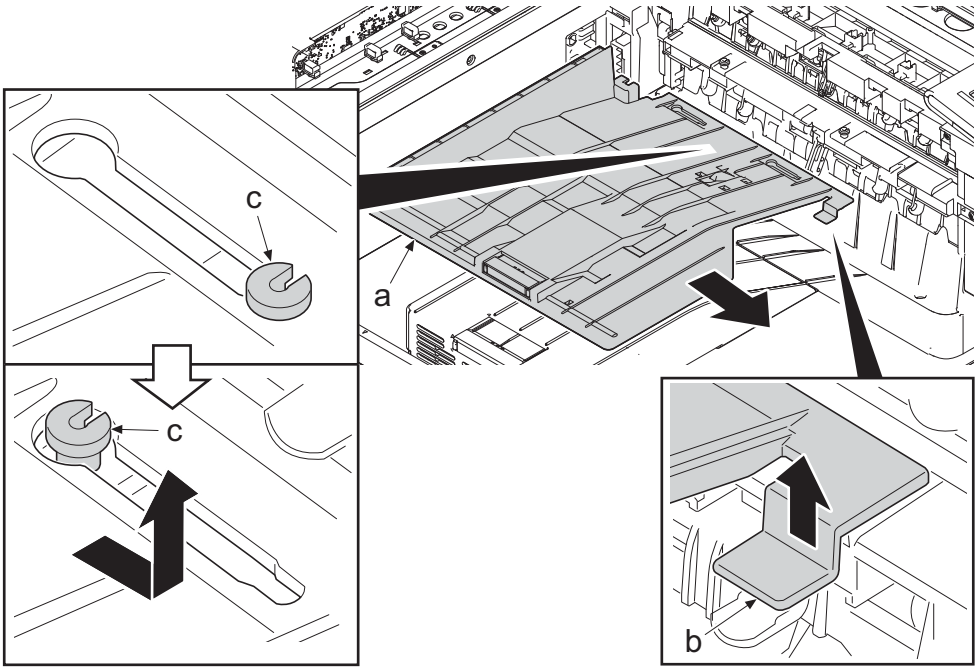

3 Remove two screws (a) (M3x8).

4 Release two hooks (c) and remove the left rear cover (b) in the direction of the arrow.

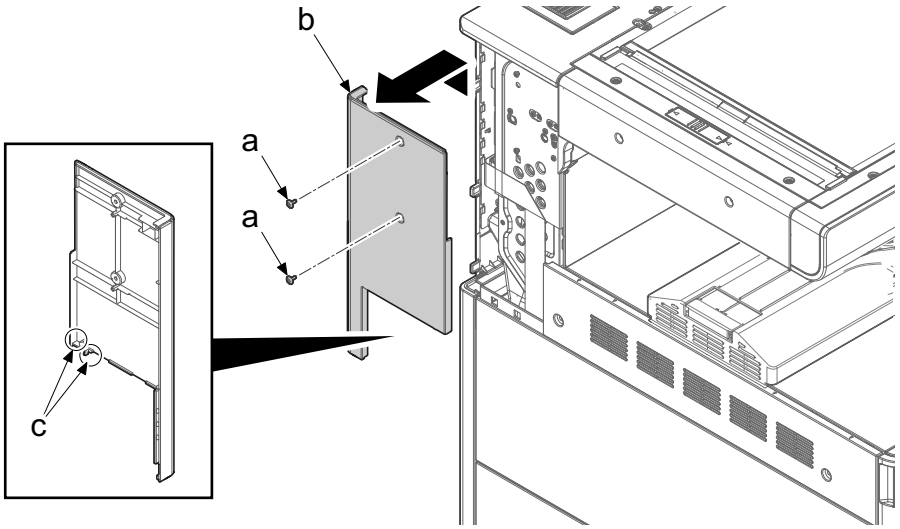

5 Open the front cover.

6 Remove two screws (a) (M4x10) from the left upper cover (c) and the screw (b) (M3x8) from the left lower cover.

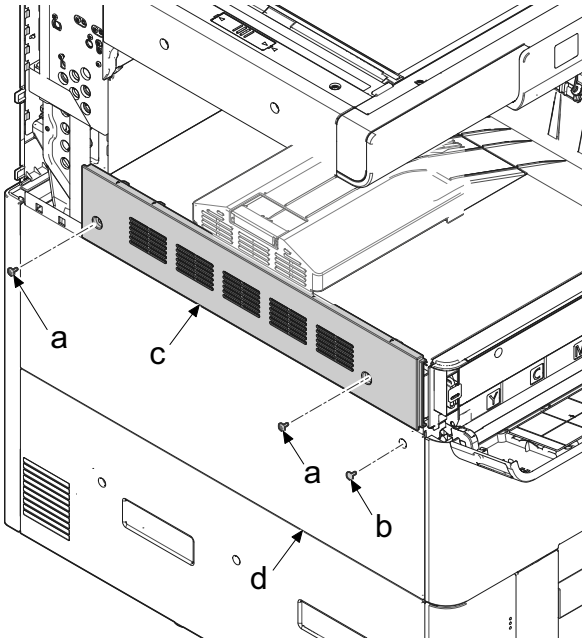

7 Release four hooks (b) in top of the left top cover while spread left lower cover (c) in the direction of the arrow, and remove the left top cover (a).

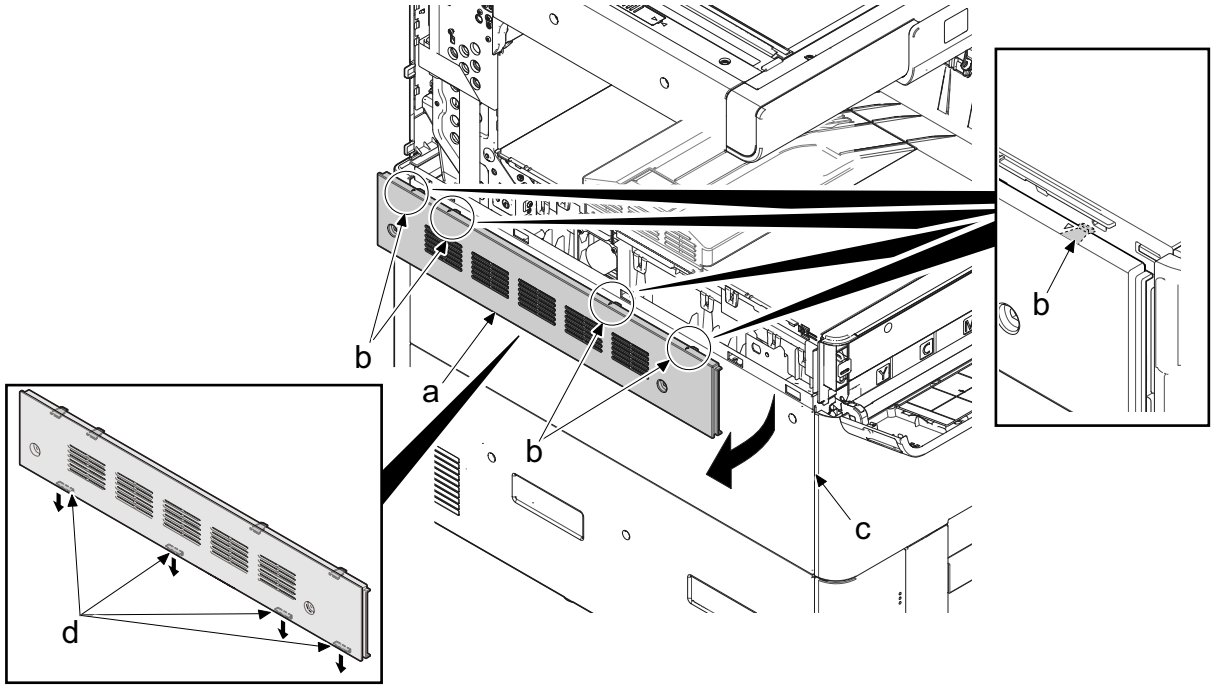

Notes for attaching

latching four lower hooks (c and the upper hook (b) then attach the top left cover (a).

8 Pull out the lower cassette.

9 Remove three screws (a) (M3x8).

10 Lift and remove four hooks (c) and remove left lower cover (b).

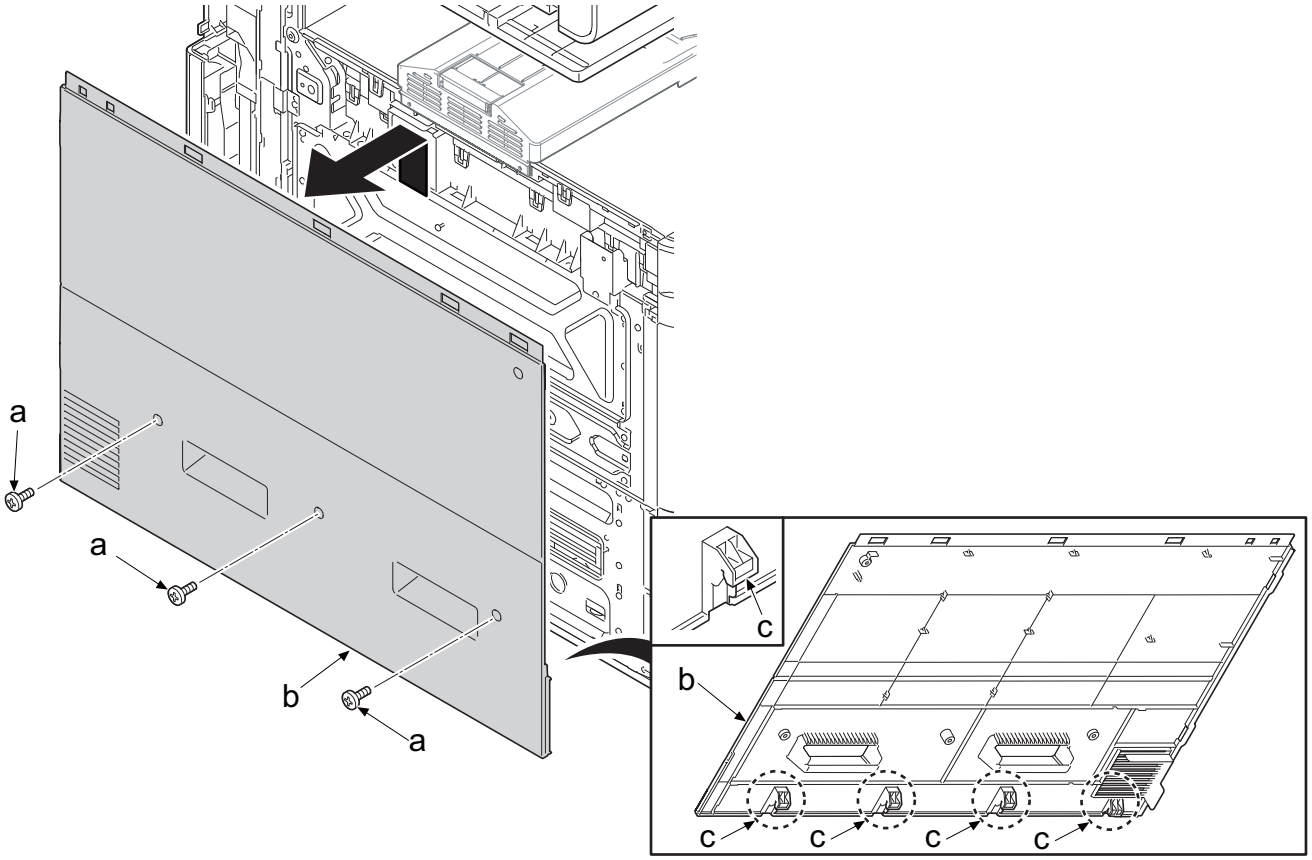

11 Detach the sub tray (a) in the direction of the arrow.

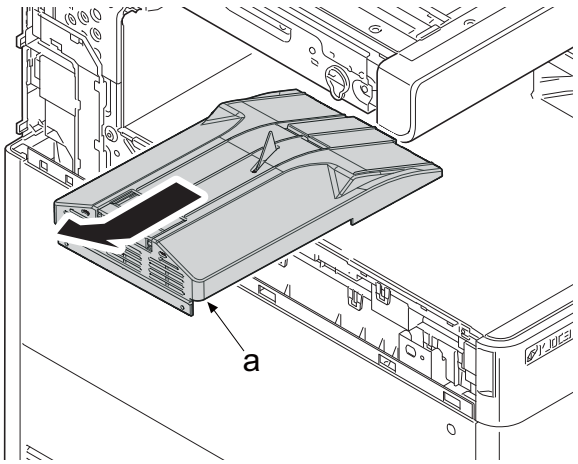

12 Remove three screws (a) (M3x8).

13 Remove the DP rear cover (b) in the direction of the arrow.

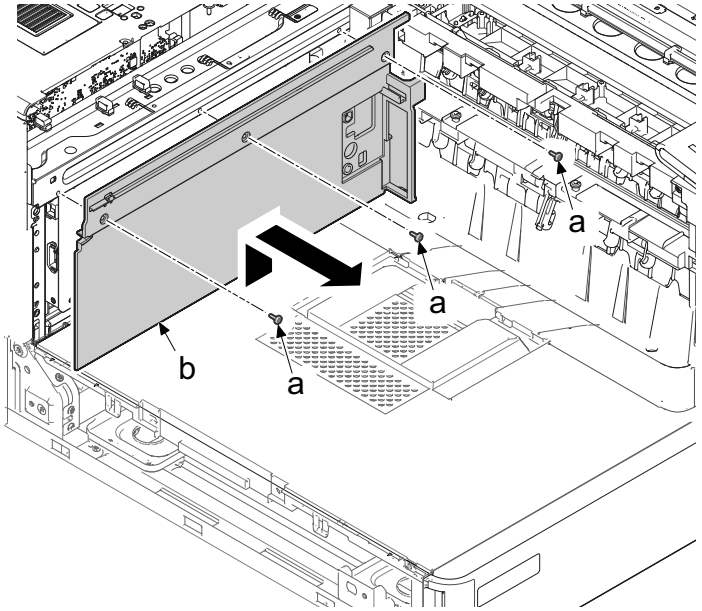

14 Remove one screw (a) (M3x8).

15 Detach the sensor mounting plate (b).

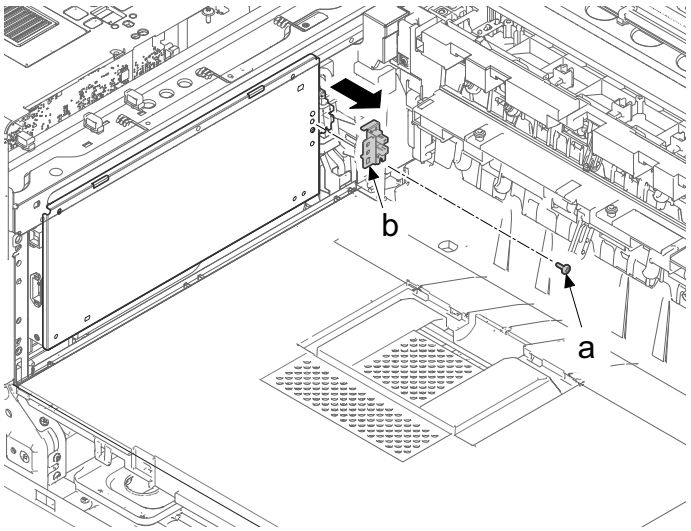

16 Remove four screws (a) (M3x8).

17 Detach the IH shield plate (b).

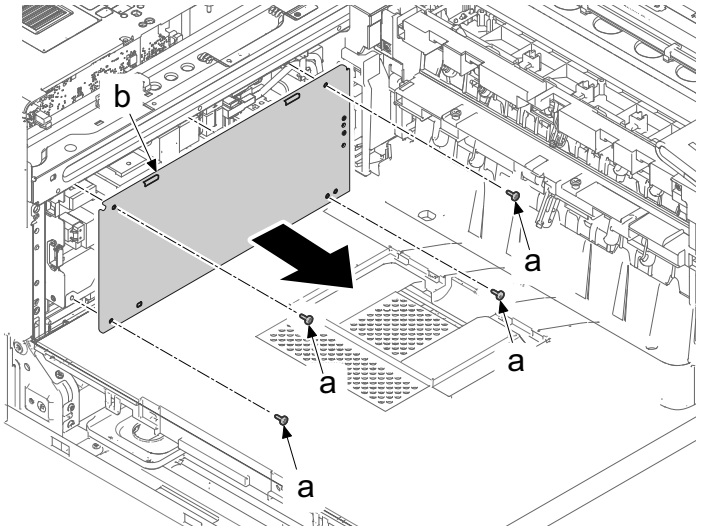

18 Disconnect all connectors from the IH PWB (b).

19 Remove six screws (a) (M3x8).

20 Release 3 board supports (c) and remove the IH PWB (b).

21 Check or replace the IH PWB (b), and then reattach the parts which is removed.

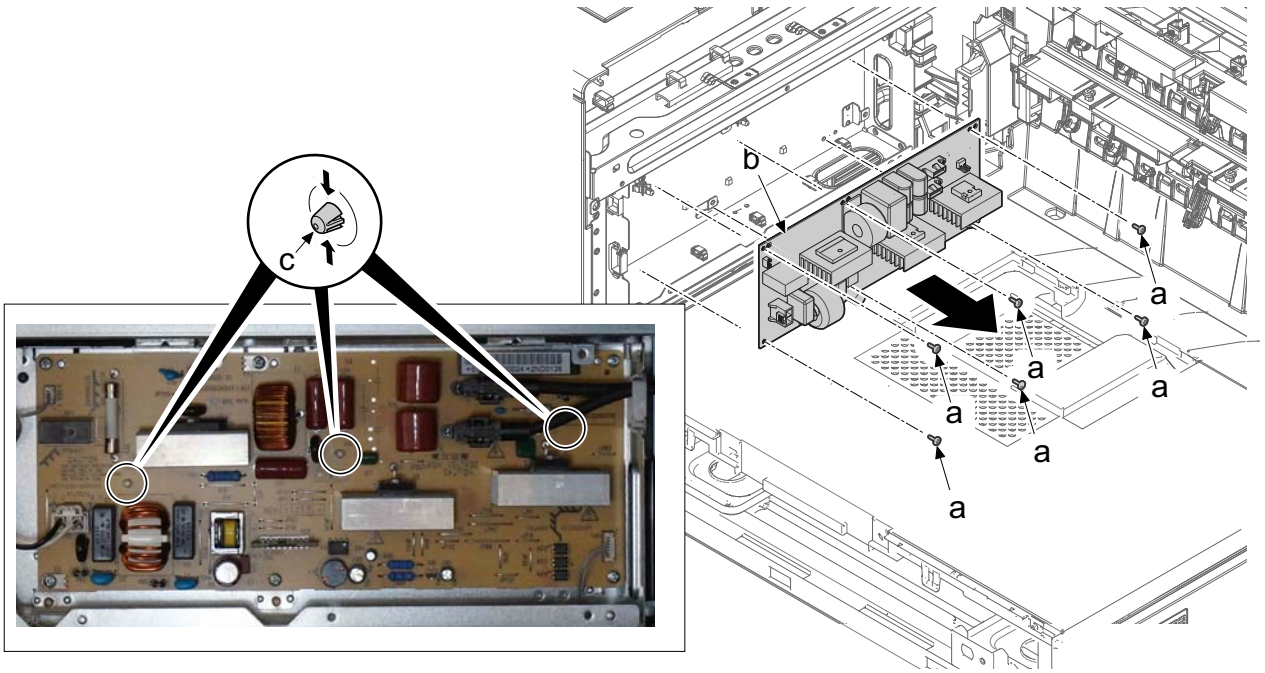

(5-8)Detaching and attaching the operation panel PWB

1 Get the operation panel (a) straight.

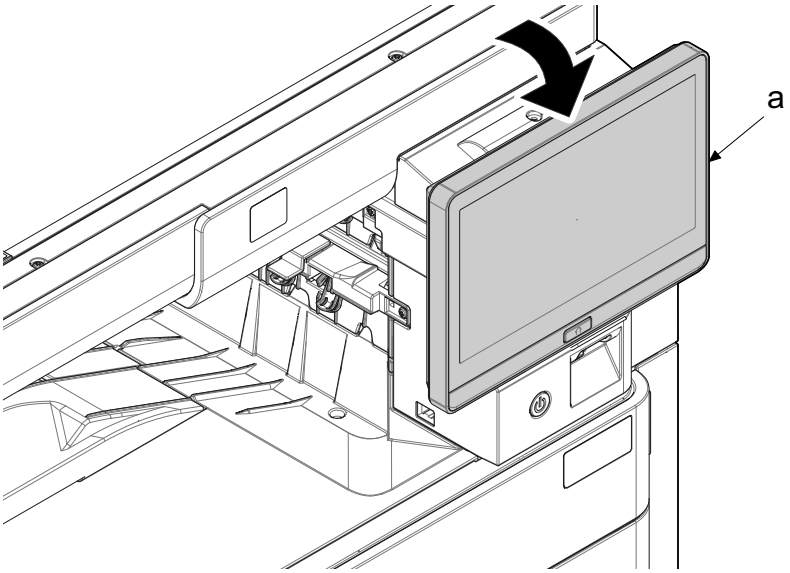

2 Insert a finger into the aperture (c) of the ISU front right cover (b) to pull it toward you and remove four lower hooks (d). Unlatch six upper hooks (e) in the direction of the arrow to remove it.

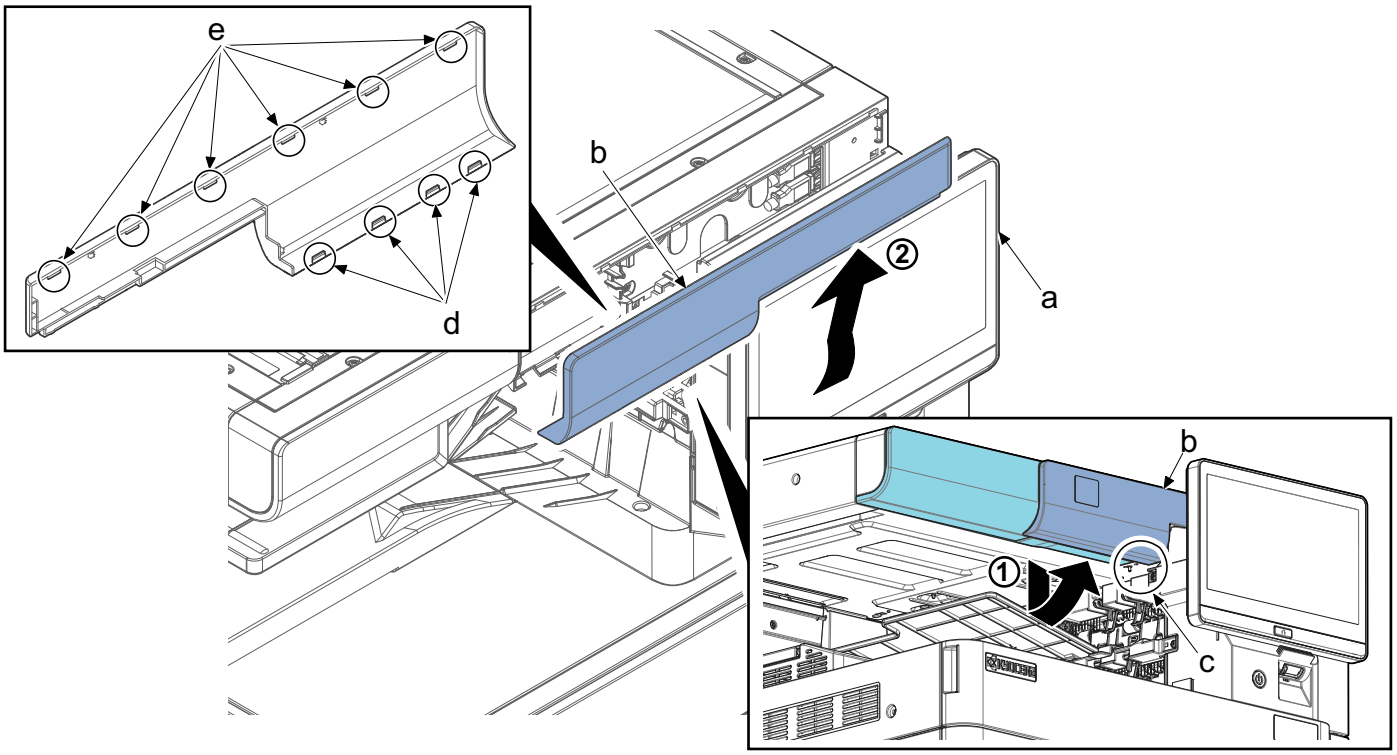

3 Remove the screw (a) (M3x8).

4 Release two ribs (d) with a flat-blade screwdriver (c).

5 Detach the exit upper cover (b) in the direction of the arrow.

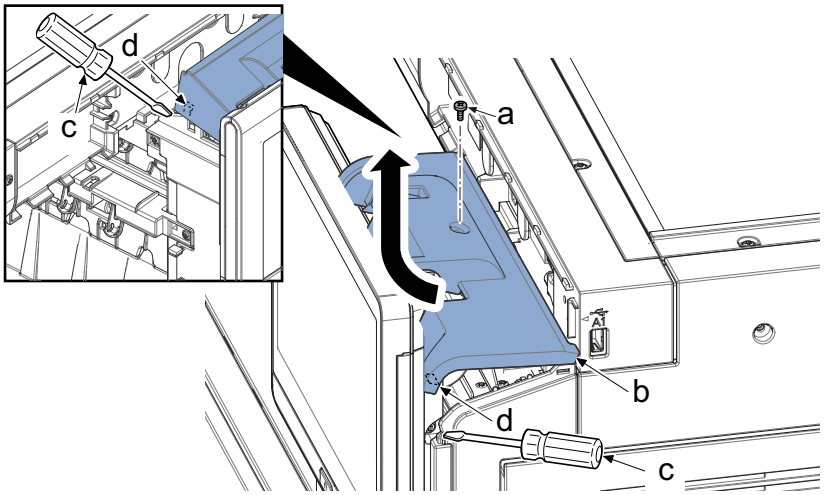

6 Remove one screw (a) (M3x8).

7 Remove the operation lid (c) from the operation unit (b) in the direction of the arrow.

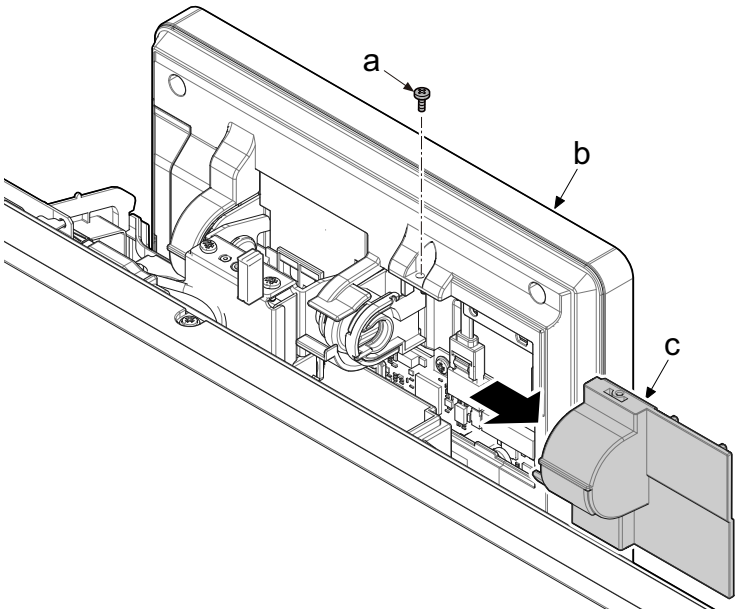

8 Disconnect 4 connectors (b) from the operation unit (a).

9 Detach the wire guide (c).

10 Remove two screws (d) (M3x8).

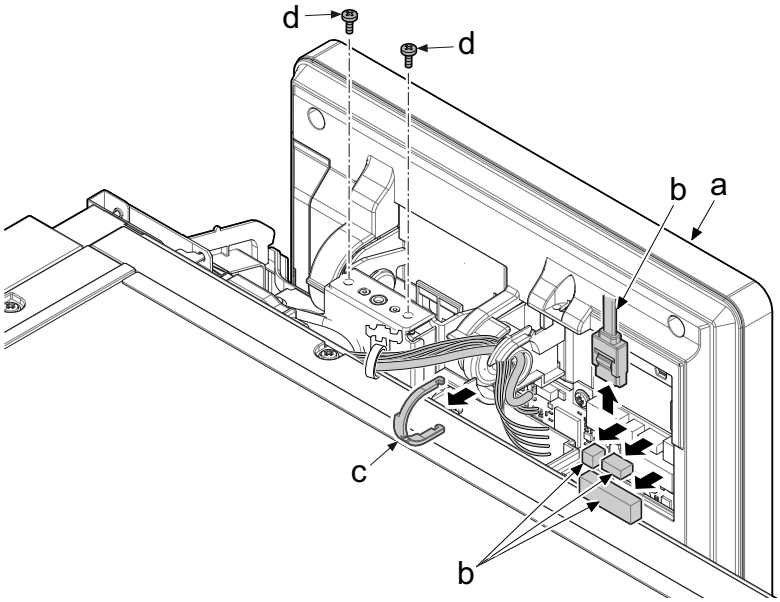

Pull toner container (K) out in ready mode.

In case that container cover (b) is locked, open it with container solenoid that is run by maintenance mode U033

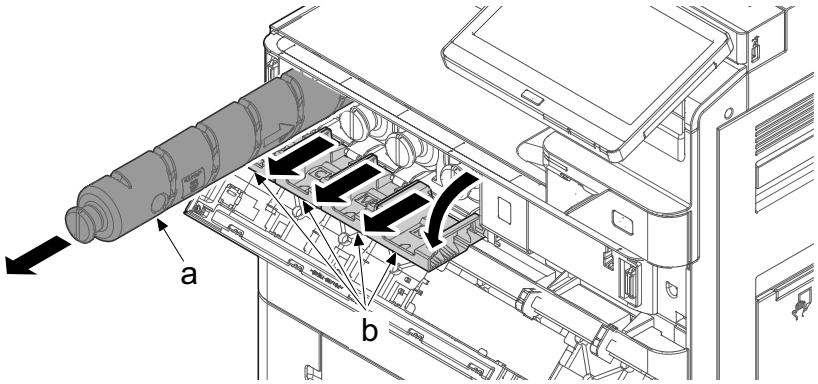

11 Remove three screws (b) (M3x8).

12 Remove one connector (a) and detach the front container unit (c).

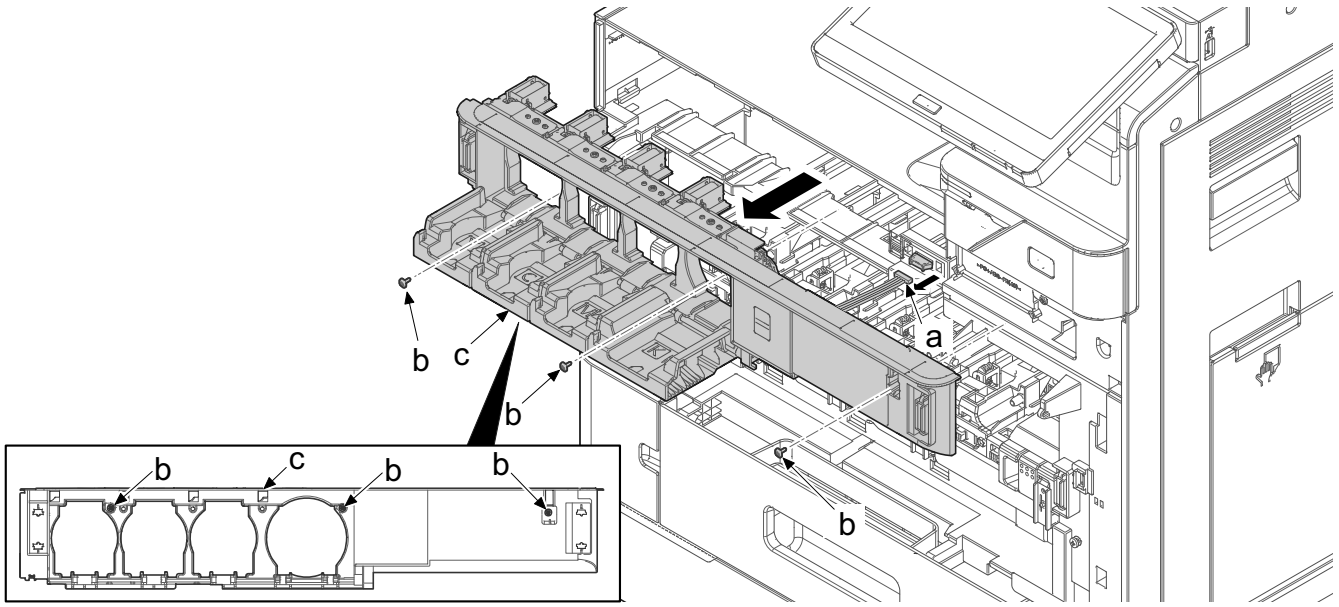

13 Lift up operation panel (a).

14 Unlatch two hooks (b) with a flat-blade screw driver and remove the front cover (d).

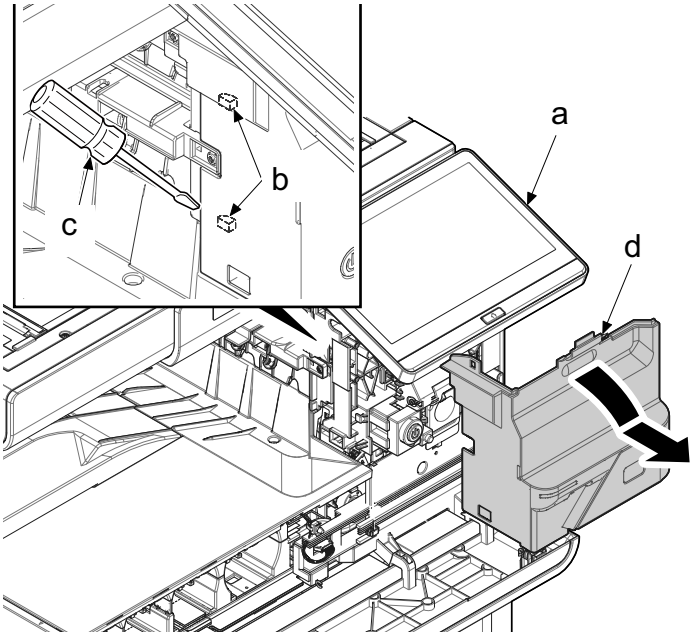

Notes for attaching

When attaching the front cover (d), insert two lower hooks latch the hooks (b) completely.

15 Remove two screws (a) (M3x8) and remove the operation section (b).

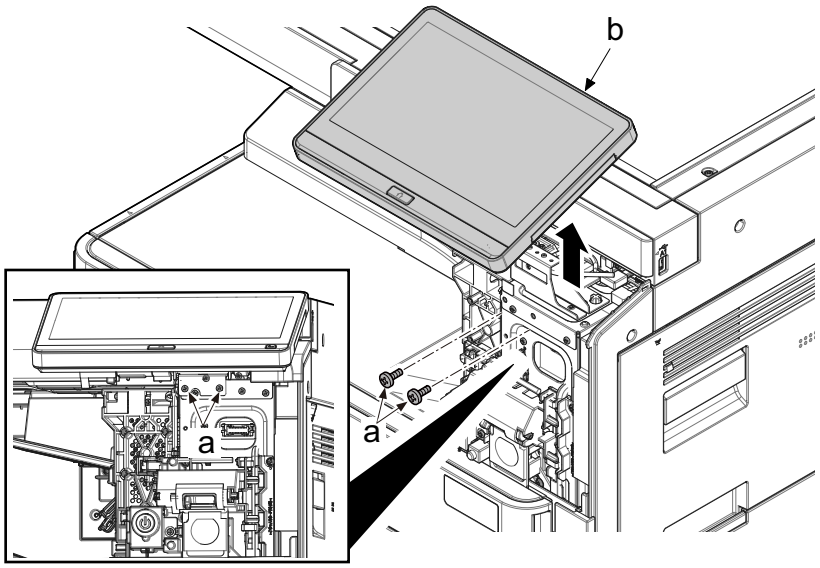

16 Remove the screw (a) (M3x8).

17 Release two hooks (b), and then remove the operation unit lid (c) in the direction of the arrow.

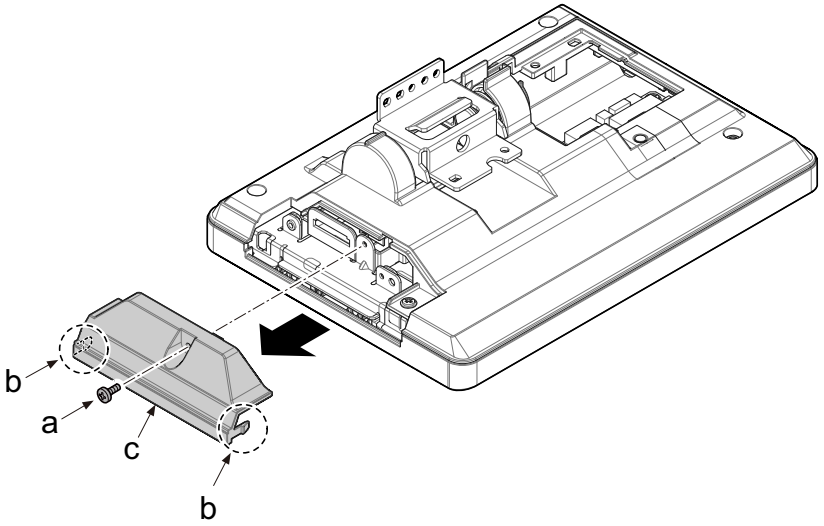

18 If the bracket is down then rotate it to up.

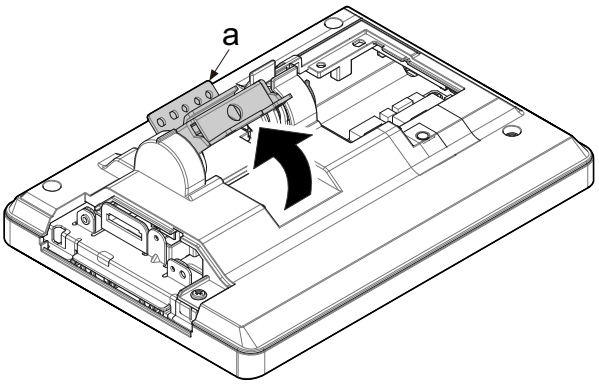

19 Remove 4 screws (a) (M3x8) and remove the operation rear cover (c) from operation section (b).

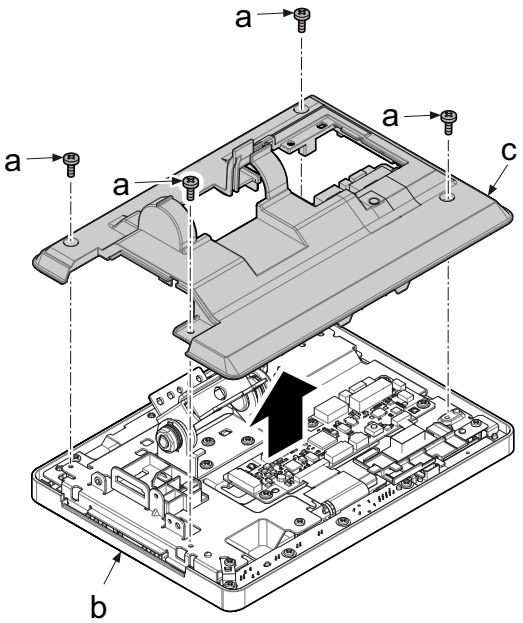

20 Remove 2 screws (g) (M3x8) and remove the operation lower rear cover (e) from operation section (b).

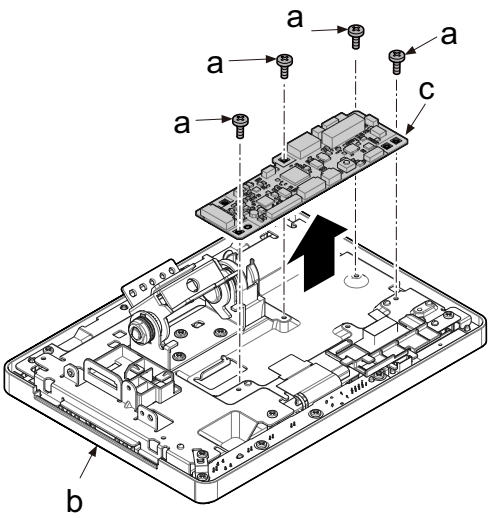

21 Disconnect all FFCs , FPCs and the connectors from the operation PWB (c).

22 Remove 4 screws (a) (M3x8) and remove the operation panel main PWB (c) from operation section (b).

23 Check or replace the operation panel main PWB (c) and then reattach the parts which are removed.

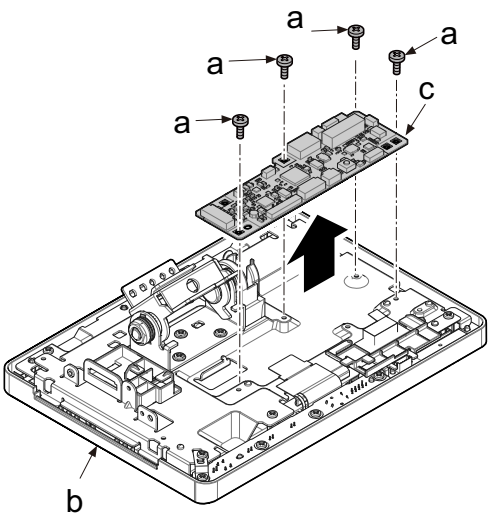

(6)Sensor adjustment

(6-1)Attach MP paper width sensor

1 Set MP paper width guide to A6 size.

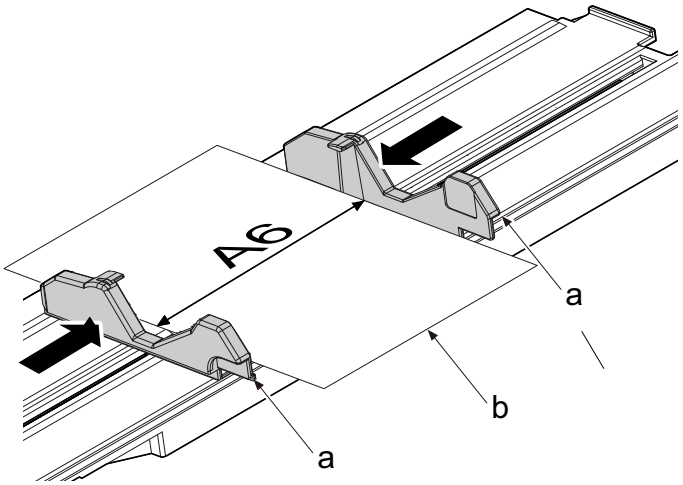

2 Insert positioning pin (b) to square hole (a) on MP lift plate.

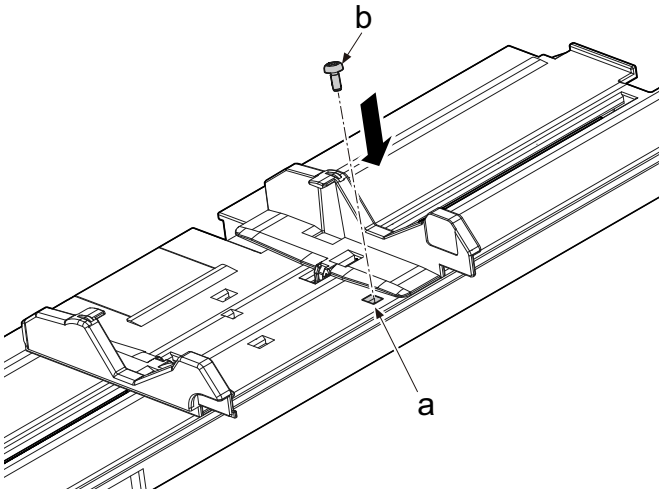

3 Up side of MP lift plate (b) down holding the positioning screw (a)

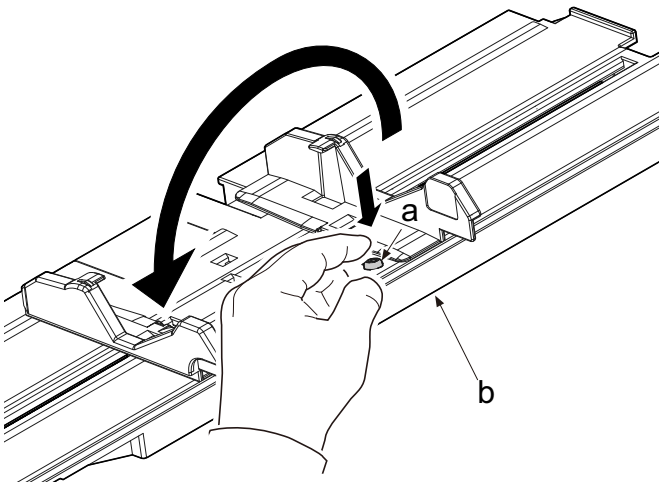

4 Insert the positioning screw (a) to hole of the gear and attach it.

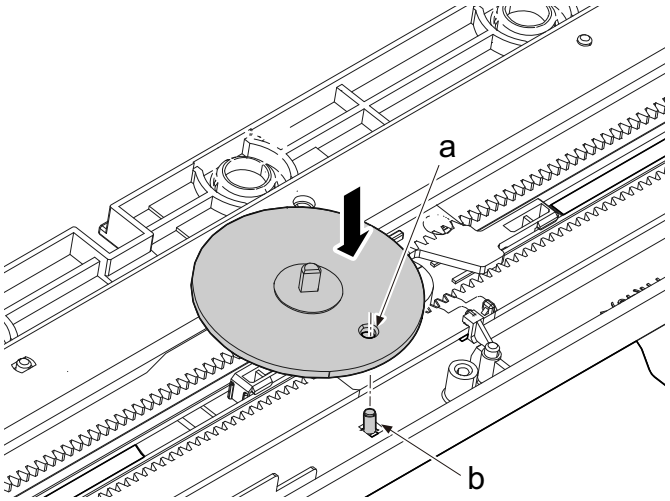

5 Align D-cut of MP paper width sensor to D-cut shaft and attach it.

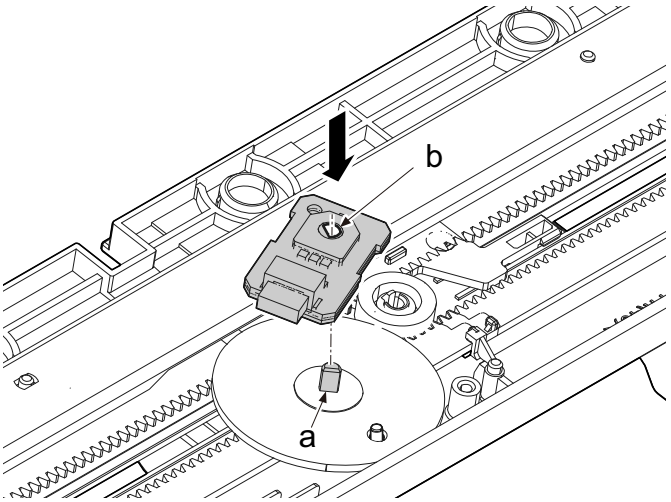

6 Align Cut-off if sensor cover to positioning screw (b) and remove the positioning screw. Attach sensor cover.

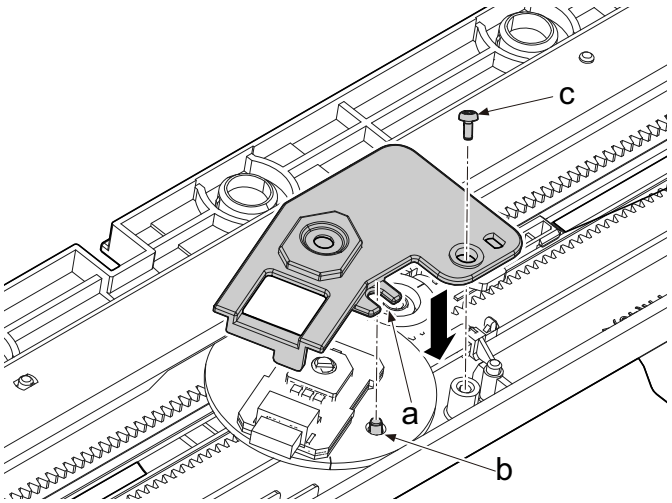

4 - 7 Disassembly and assembly (Enhancement)

(1)Paper feeder (PF-7140)

(1-1)Detaching and attaching the PF drive unit

1 Remove five screws (a). Remove PF rear cover (c) from the paper feed unit (b).

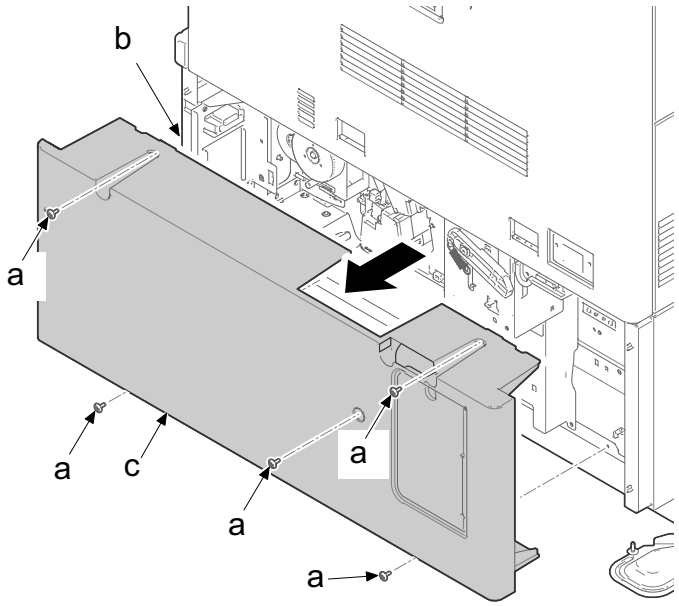

2 Disconnect the connector (b) of the motor (a).

3 Remove three screws (b) and detach the PF drive unit (d).

4 Check or replace the PF drive unit (d), and then reattach the parts in the original position.

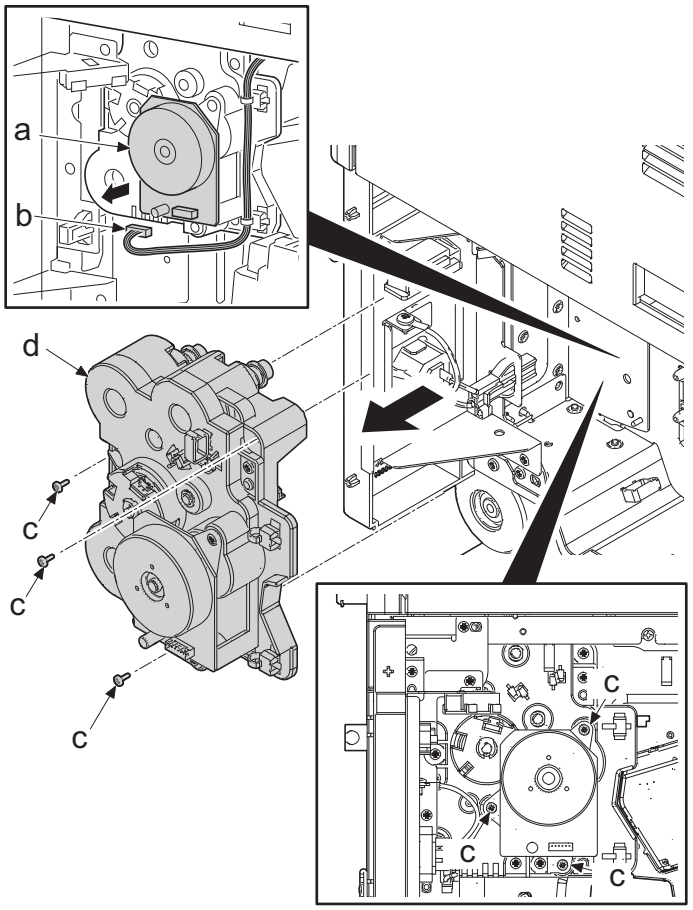

(1-2)Detaching and attaching the PF lift motor

1 Pull out the upper cassette (a) from the paper feeder (c) and remove it in the direction of the arrow.

2 Pull out the lower cassette (b) from the paper feeder (c) and remove it in the direction of the arrow.

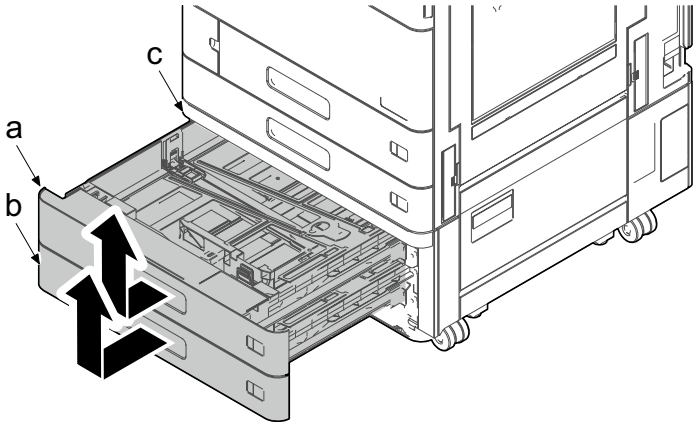

3 Disconnect two connectors (a) and three screws (b). Remove the PF lift motor (c).

4 Check, clean or replace PF lift motor (c) and then reattach in the original position the parts which are removed.

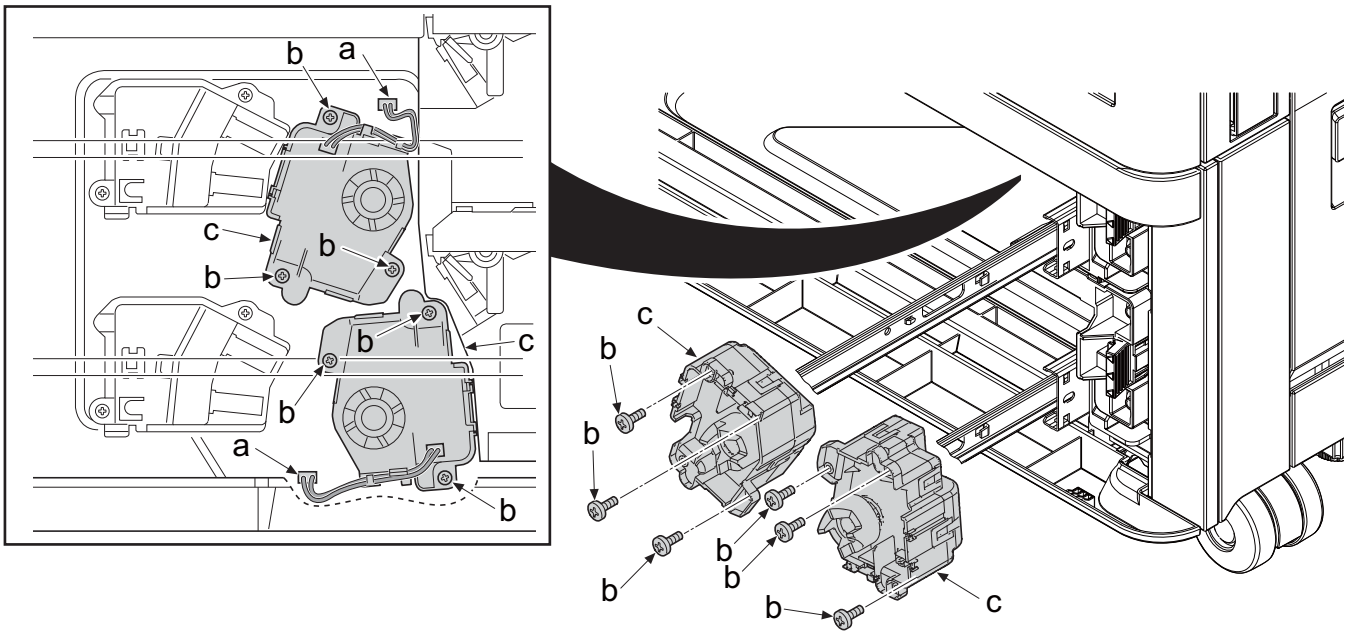

Replacement steps

1 When replace PF lift motor, disconnect connector (b) from original PF lift motor (a) and remove wire (c) releasing 2 hooks (d).

2 Connect (b) of wire (c) to new PF lift motor (e) and latch 2 hooks (f).

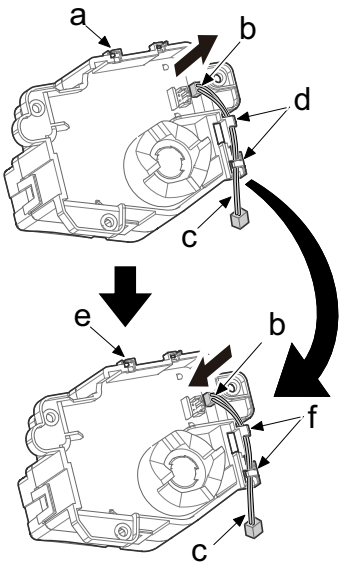

(1-3)Detaching and attaching the PF PWB

1 Remove five screws (a). Remove PF rear cover (c) from the paper feed unit (b).

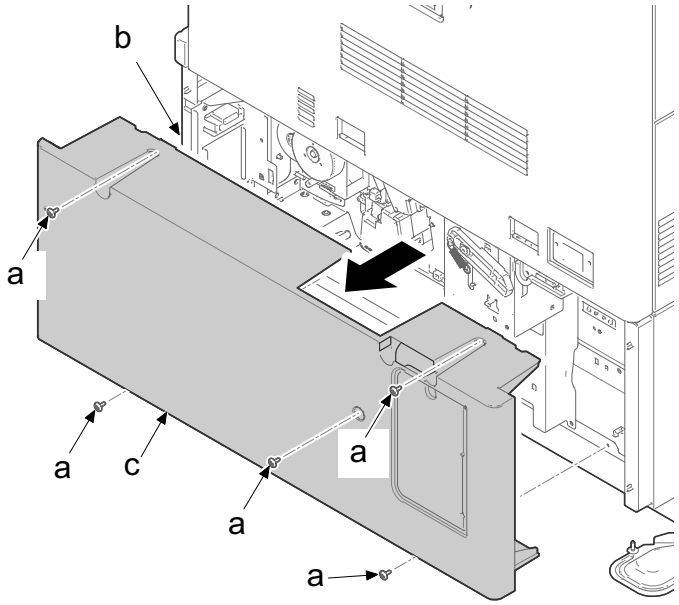

2 Disconnect all the connectors from the PF main PWB (a).

3 Remove two screws (b) and remove the PF main PWB (a).

4 Check or replace the PF main PWB (a), and then reattach the parts in the original position.

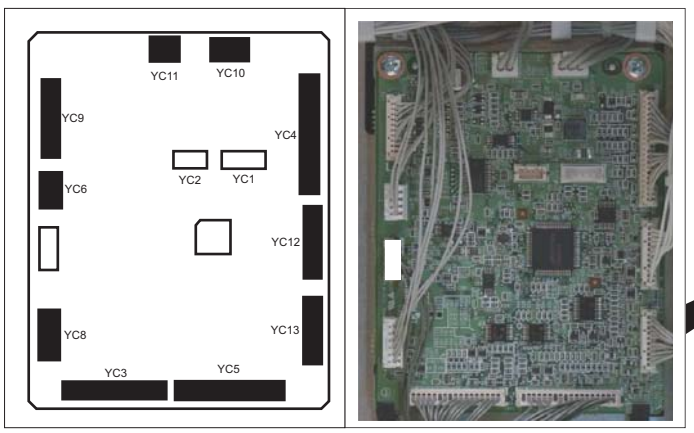

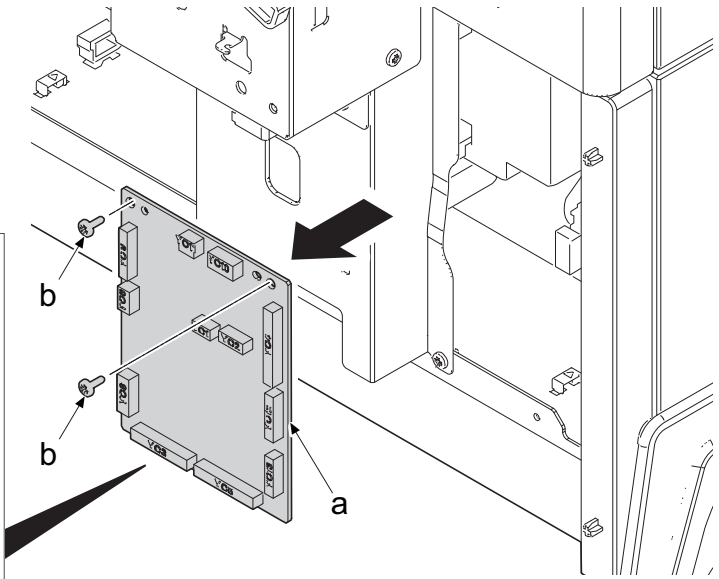

Notes for PF PWB replacement

- After replacing it, upgrade the firmware to the newest one.
- Execute U901 and input the engine counter value.

(2)Large capacity feeder (PF-7150)

(2-1)Detaching and attaching the PF drive unit

1 Remove five screws (a).

2 Remove PF rear cover (c) from the paper feed unit (b).

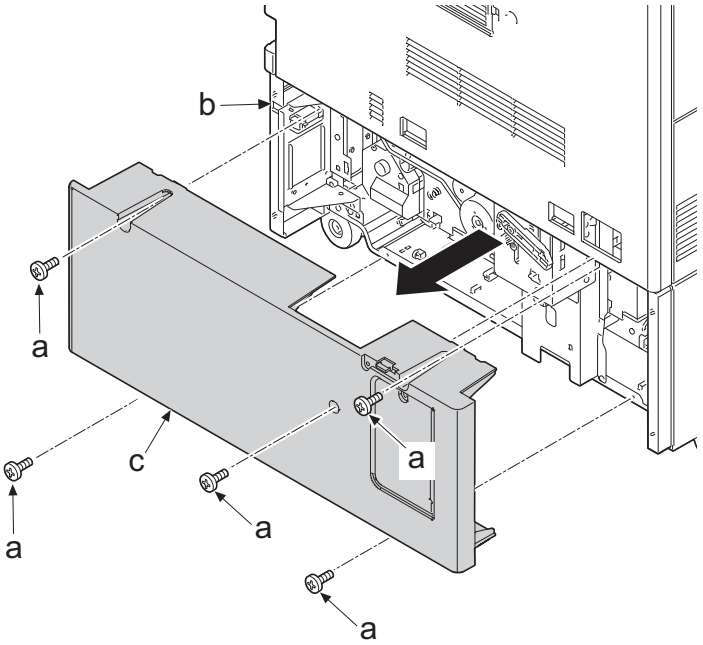

3 Remove four screws (b).

4 Remove the interface assembly (a).

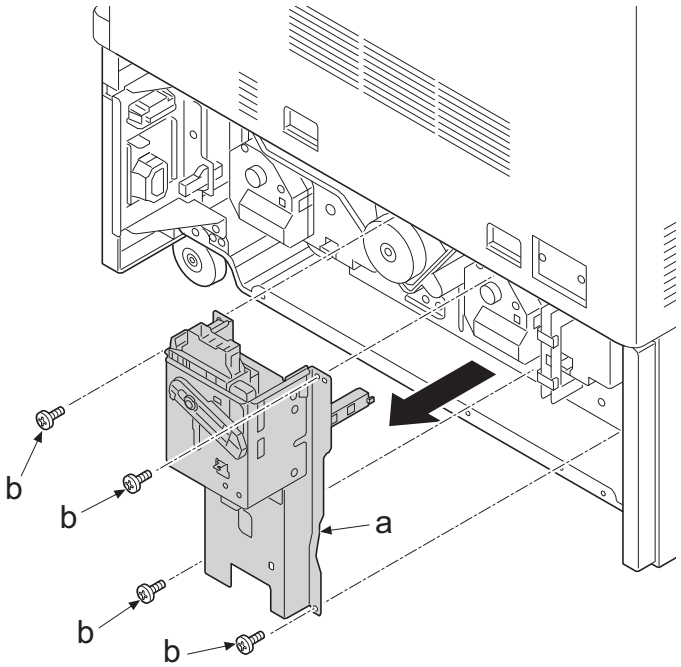

5 Release the three wire saddles, and release the wire stoppers (b) and remove wires (c)

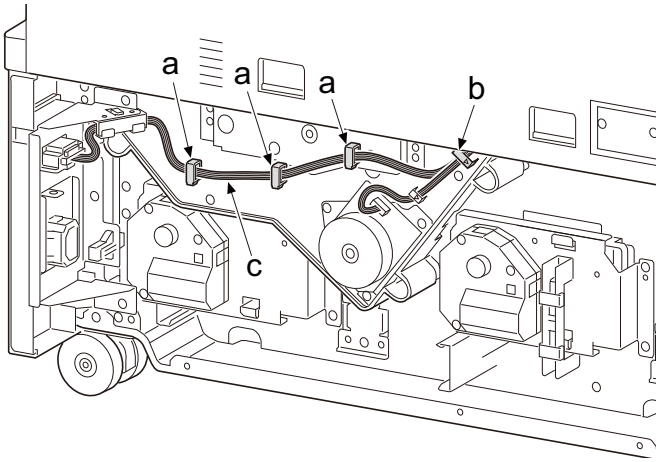

6 Pull the lever (b) of the wire holder (a) and remove the wire holder (a).

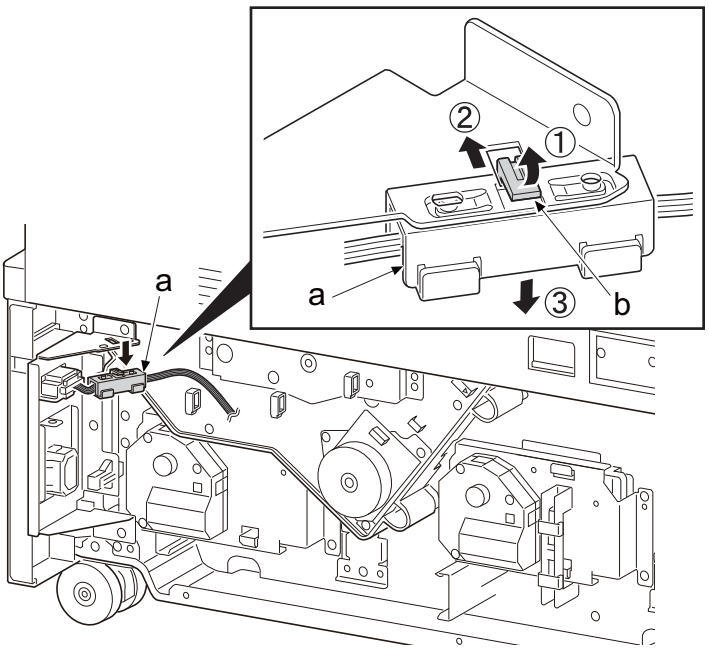

7 Remove five screws (b) and detach the PF drive unit (a) in the direction of the arrow.

8 Check or replace the PF drive unit (a), and then reattach in the original position the parts which are removed.

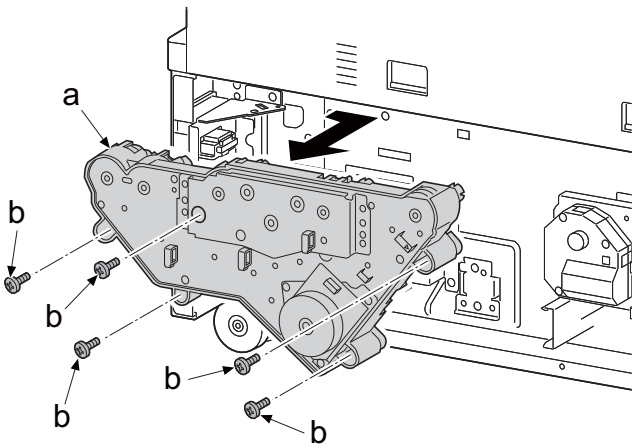

(2-2)Detaching and attaching the PF lift motor

1 Remove five screws (a).

2 Remove PF rear cover (c) from the paper feed unit (b).

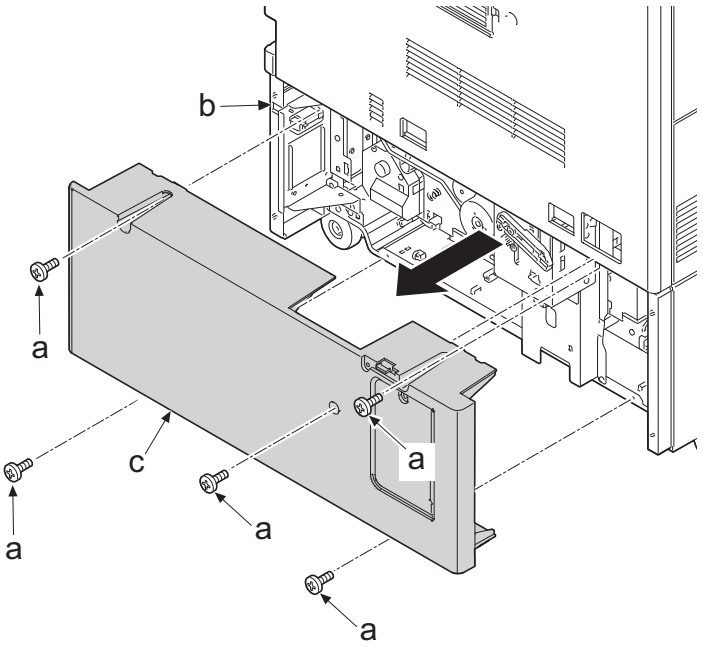

3 Remove four screws (b).

4 Remove the interface assembly (a).

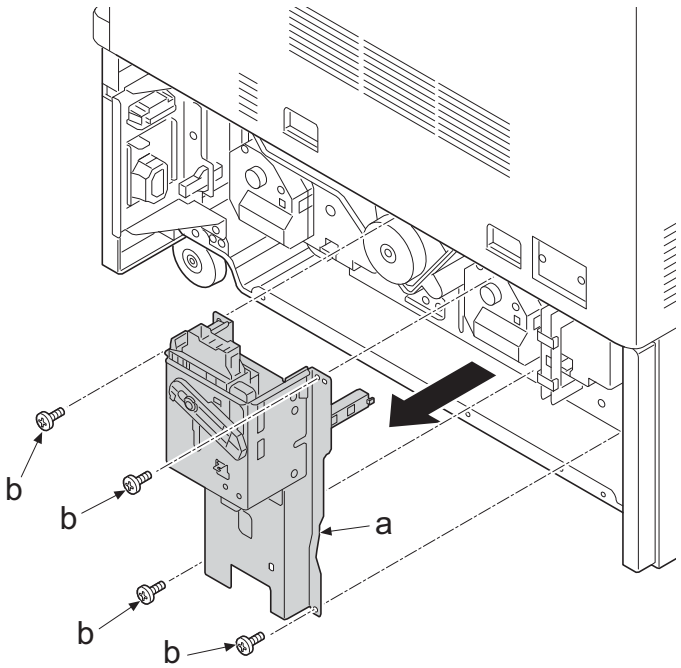

5 Disconnect the connector (c). Remove three screws (b) and detach the lift motor 2 (a).

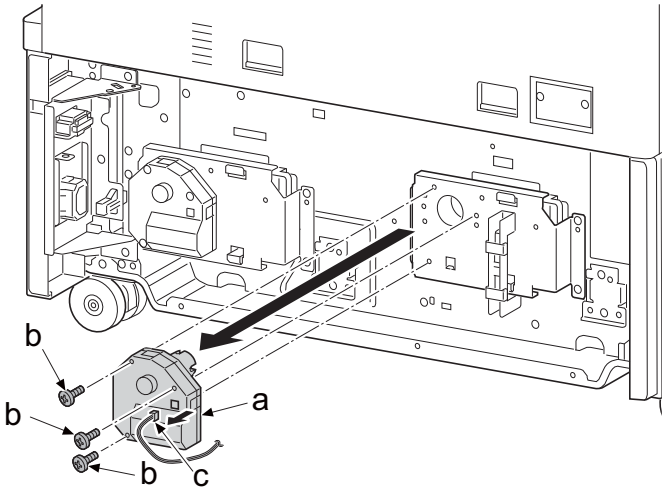

6 Release the hook (d) from the square hole (c) of the side frame and remove the PF lift motor 1 unit (a).

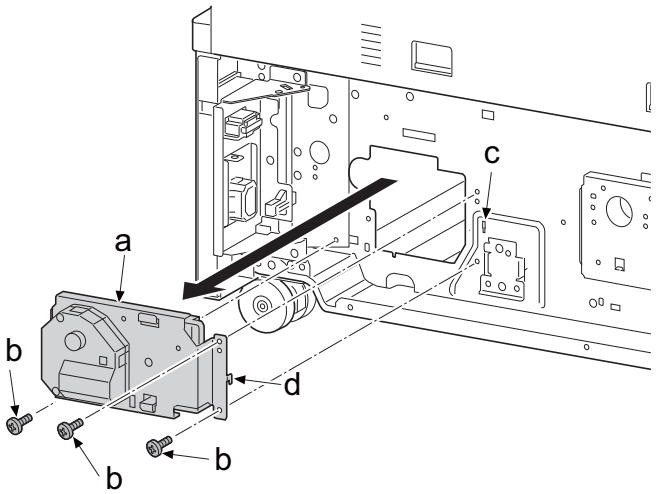

7 Disconnect connector (c) and detach the PF lift motor 1 (a).

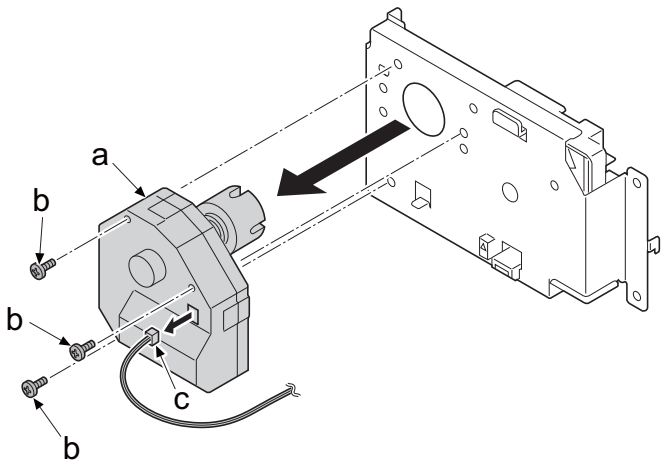

8 Check or replace the PF lift motor, and then reattach the parts in the original position.

(2-3)Detaching and attaching the PF PWB

1 Remove five screws (a).

2 Remove PF rear cover (c) from the paper feed unit (b).

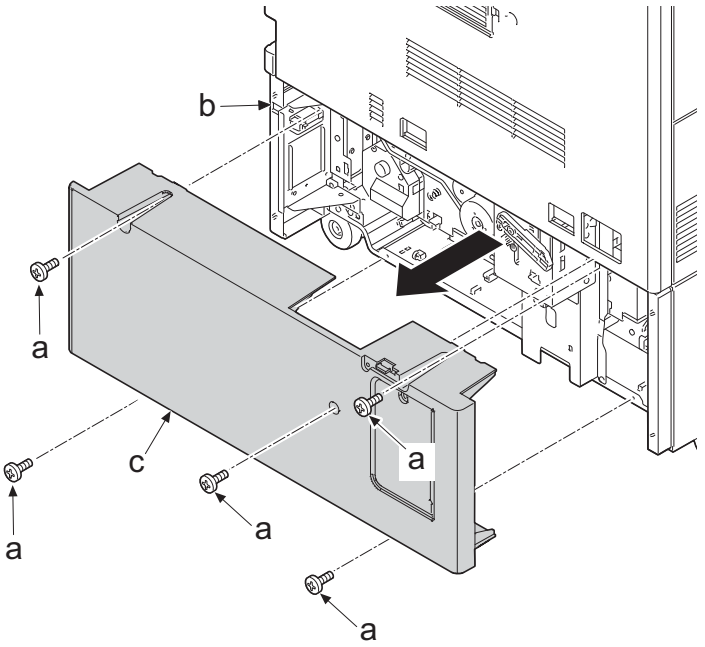

3 Disconnect all the connectors from the PF main PWB (a).

4 Remove two screws (b) and remove the PF PWB (a).

5 Check or replace the PF main PWB (a), and then reattach the parts in the original position.

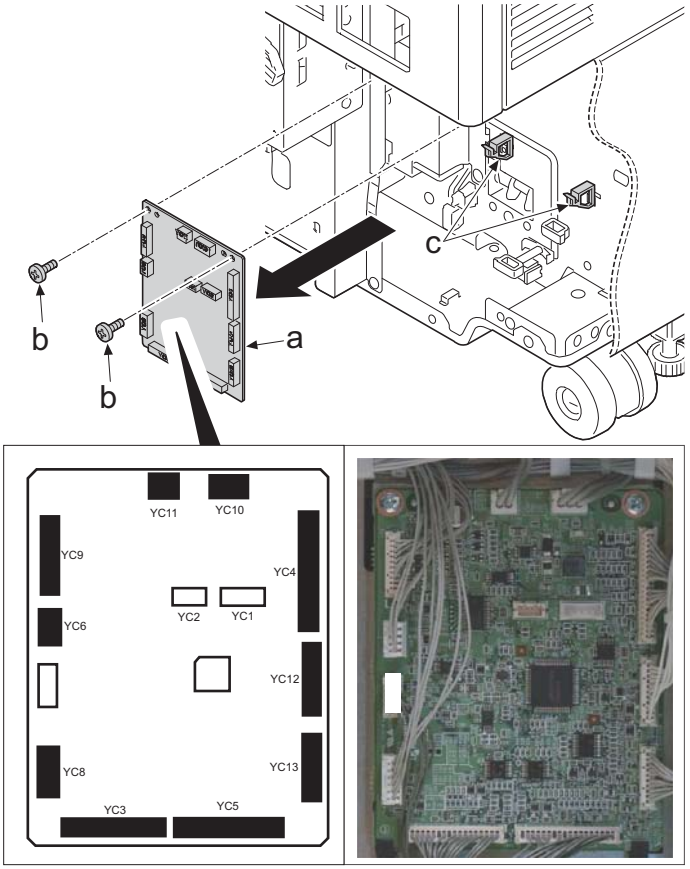

Notes for PF PWB replacement

- After replacing it, upgrade the firmware to the newest one.
- Execute U901 and input the engine counter value.

(3)Side Deck (PF-7120)

(3-1)Detaching and attaching the PF drive unit

1 Remove four screws (a). Remove PF rear cover (c) from the paper feed unit (b).

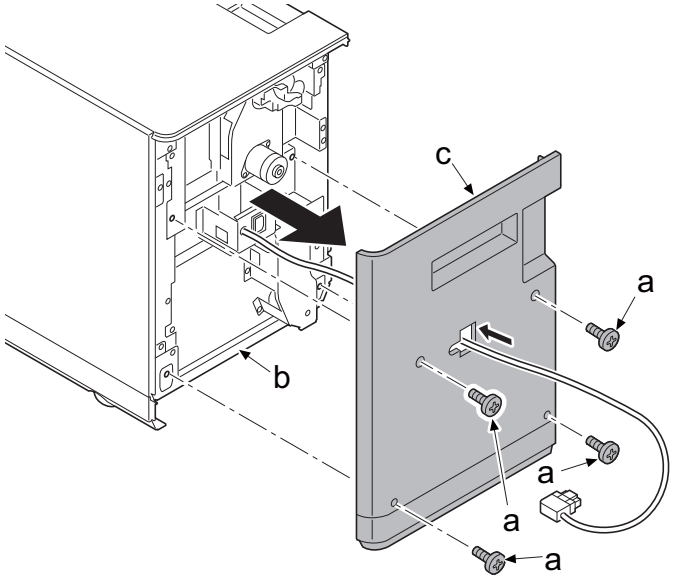

2 Disconnect the three connectors (a) and the connector (b) from the PF PWB (d).

3 Remove two wire stoppers (c) and remove the wire.

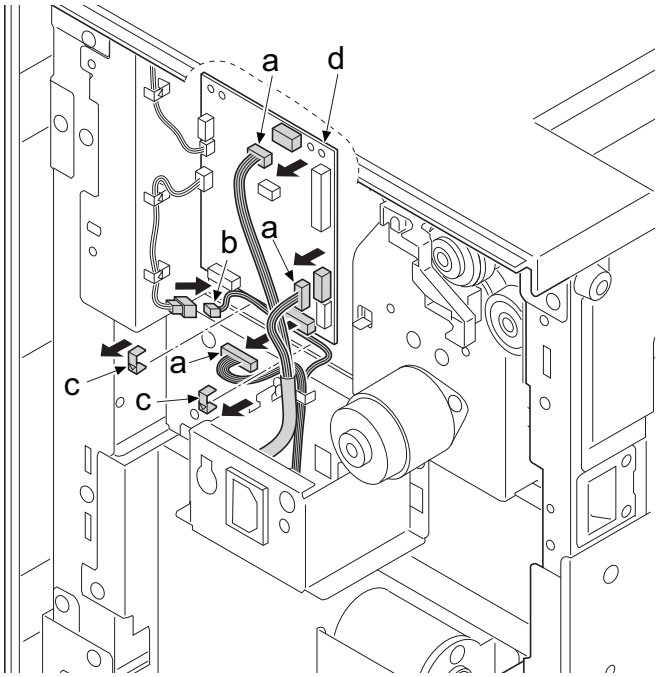

4 Remove four screws (b) and detach the PF drive unit (a) from the main unit while pushing in the switch lever (c).

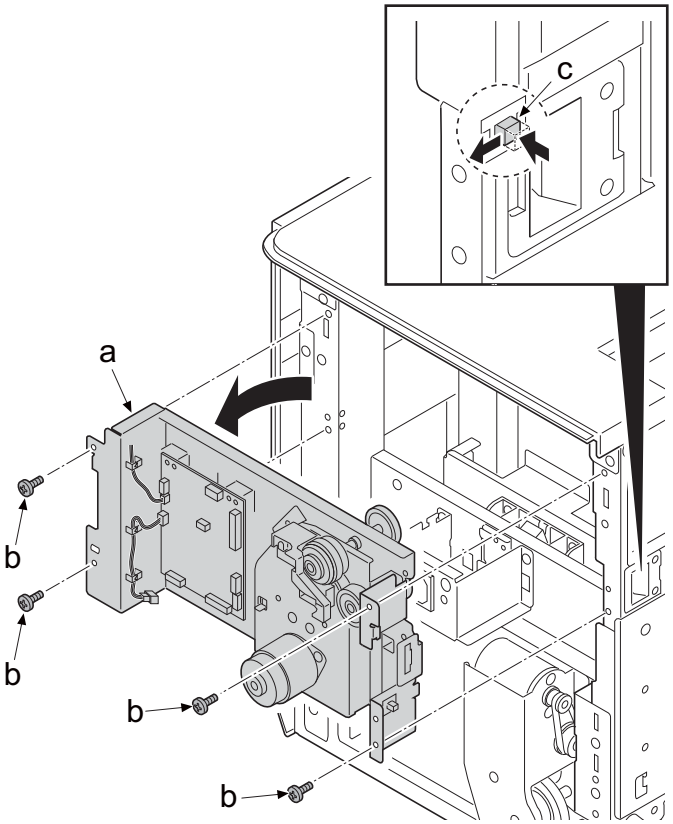

(3-2)Detaching and attaching the PF lift motor

1 Remove four screws (a) and detach the DP rear cover (b).

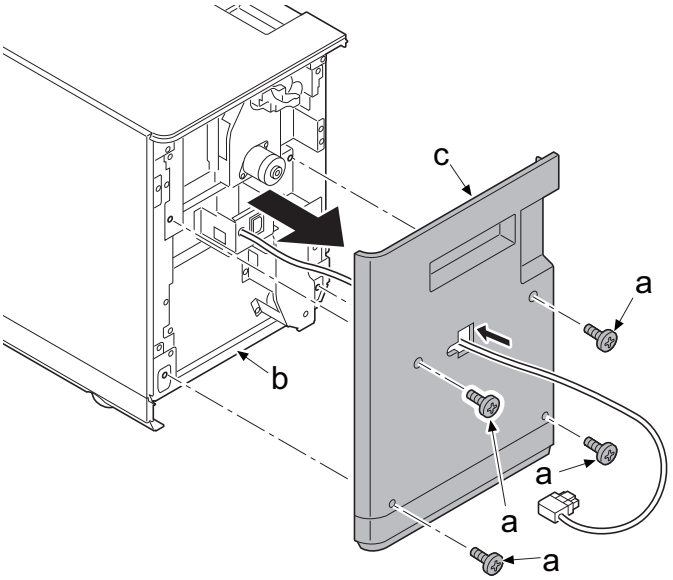

2 Release six wire stoppers (d) and one cable clamp, and then remove the wire of PF lift motor (a).

3 Disconnect the connector (b) and (c).

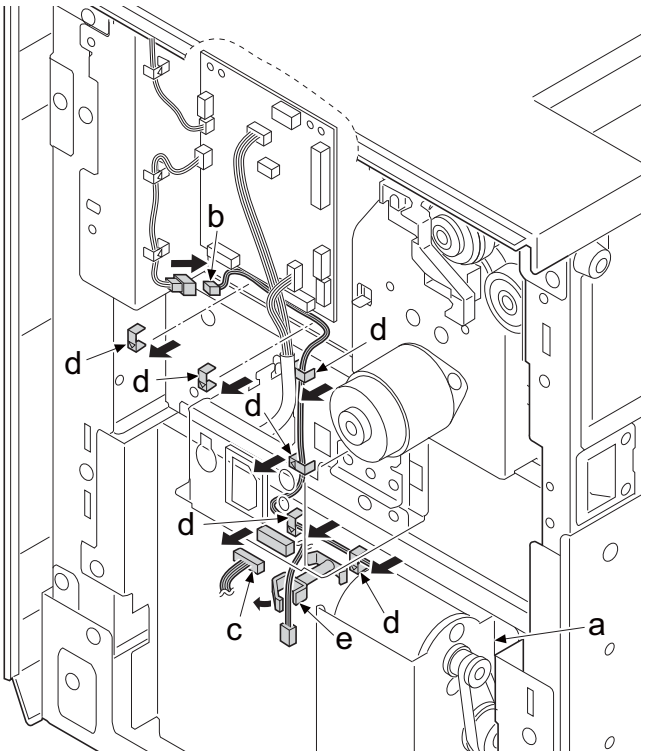

4 Remove three screws (b) and detach the PF lift motor (a).

5 Check or replace the PF lift motor unit (a), and then reattach the parts in the original position.

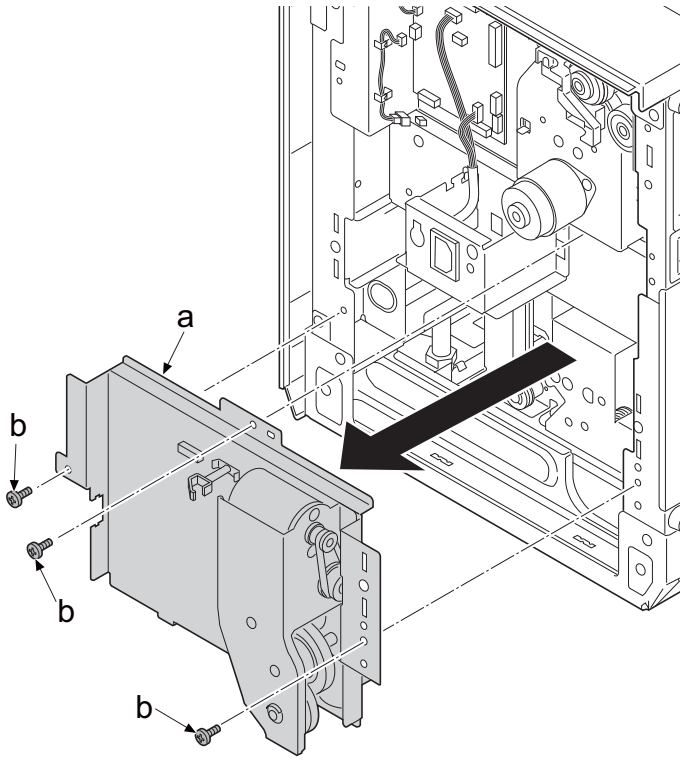

(3-3)Detaching and attaching the PF PWB

1 Remove four screws (a) and detach the DP rear cover (b).

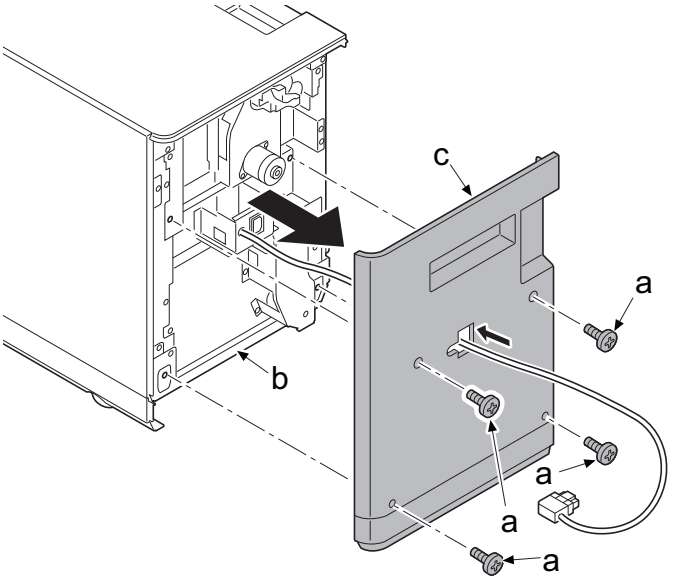

2 Disconnect all the connectors from the PF PWB (a).

3 Remove two screws (b) and remove the PF PWB (a) from 2 hooks (c).

4 Check or replace the PF PWB (a), and then reattach the parts in the original position.

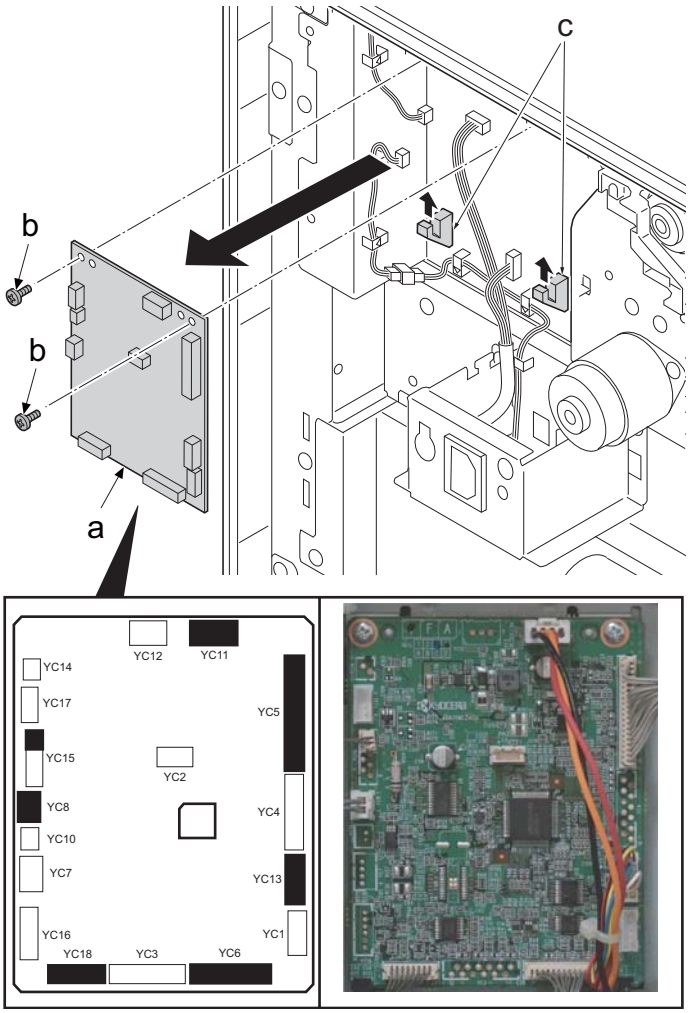

Notes for PF PWB replacement

- After replacing it, upgrade the firmware to the newest one.
- Execute U901 and input the engine counter value.

(4)Document processor (DP-7150)

(4-1)Detaching and attaching the document processor

1 Open the document processor (a).

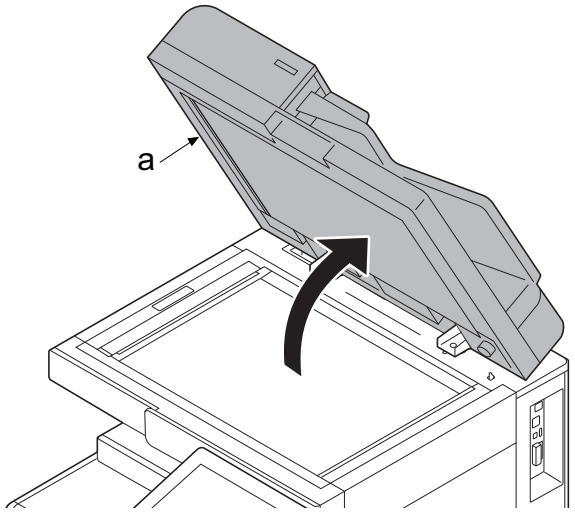

2 Remove one screw (a) (M3x10) and slide the rear top cover (b).

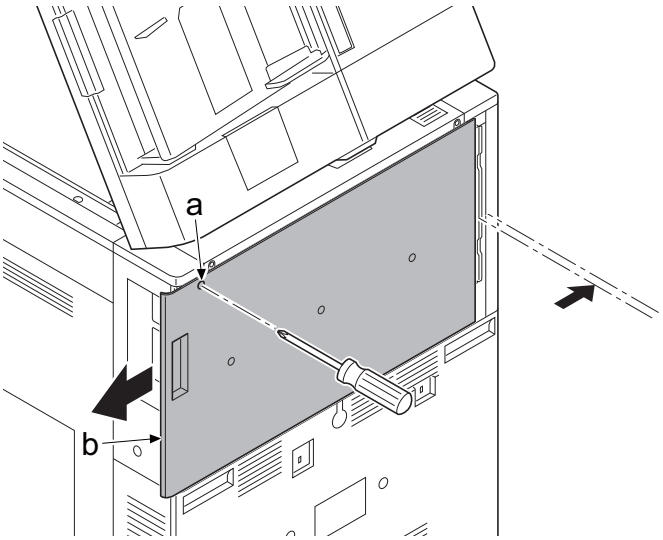

3 Remove two screws (a) and remove the DP rear cover (b).

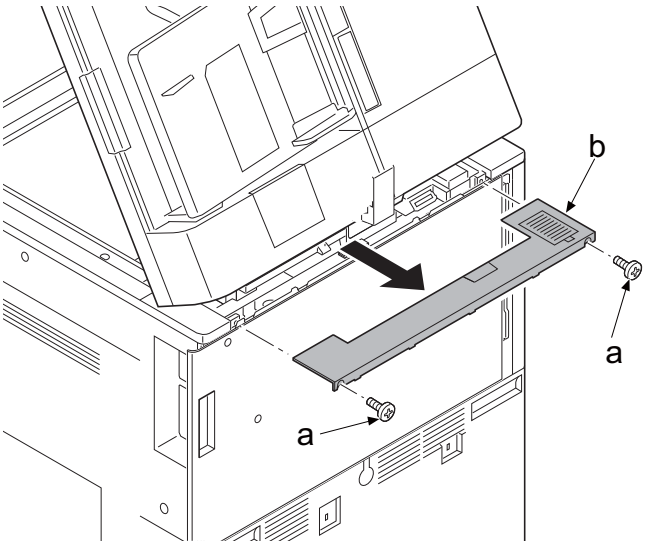

4 Close the document processor (a).

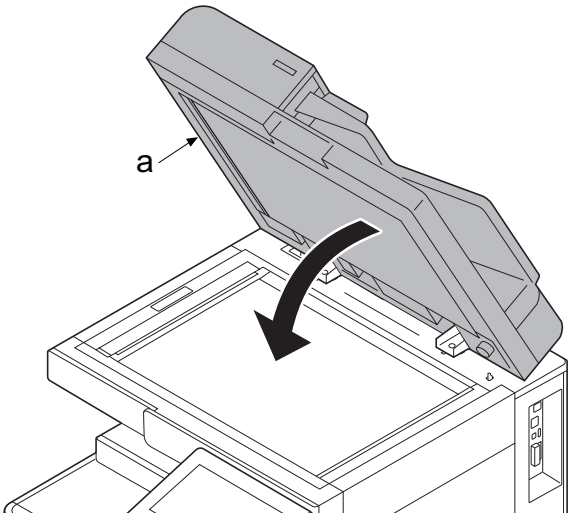

5 Detach the DP wire cover (a).

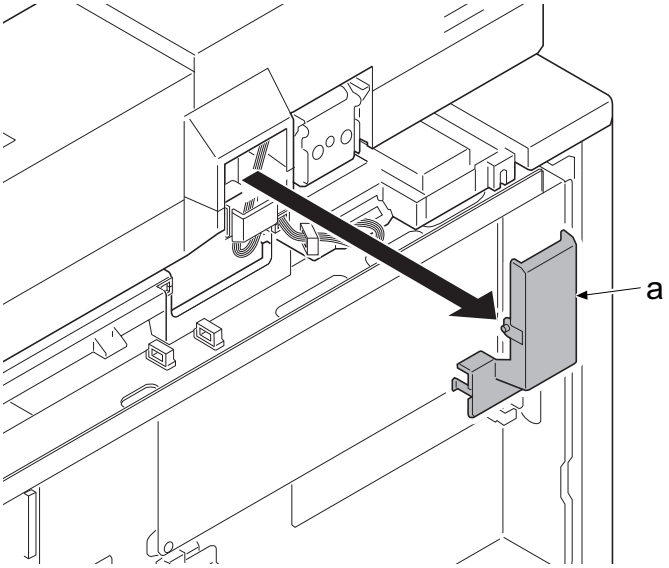

6 Remove the DP wire connector (a).

7 Remove the DP wire from wire saddles (b) and wire saddles (c)

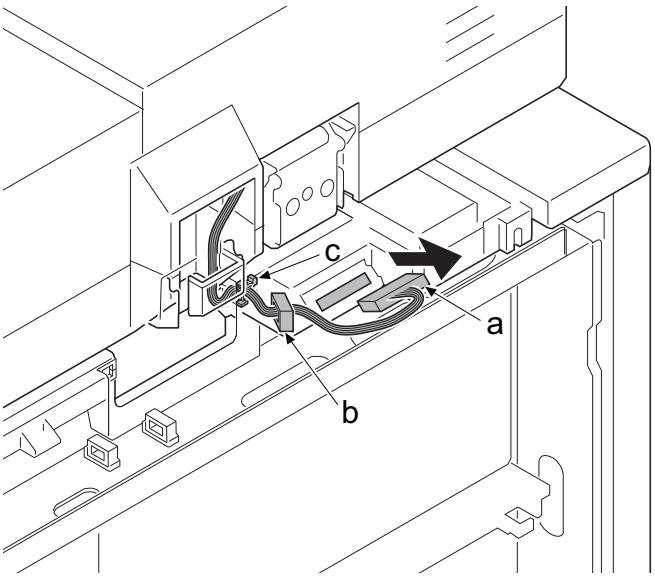

8 Remove the DP wire connector from the wire holder (b).

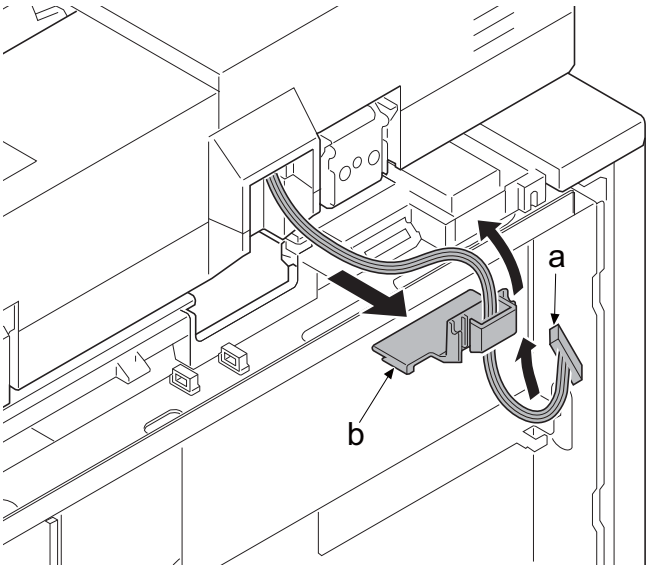

9 Lift up the document processor (a) in the direction of the arrow and remove the hinge (c) from the main unit (b).

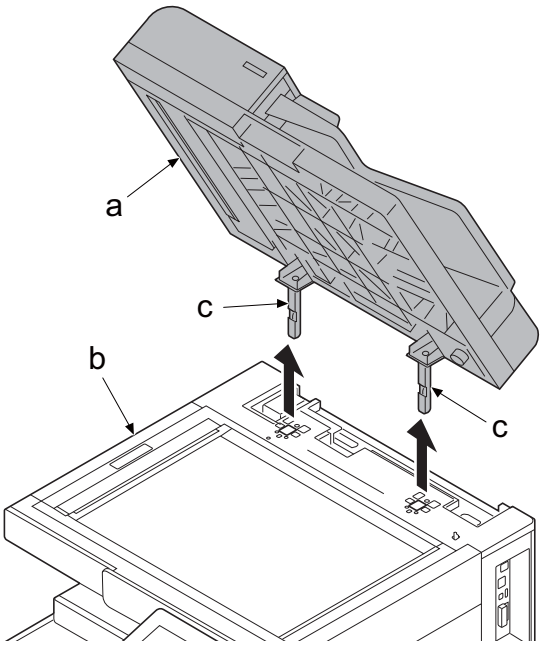

(4-2)Detaching and attaching the DP rear cover

1 Open the DP top cover (b) of the document processor (a).

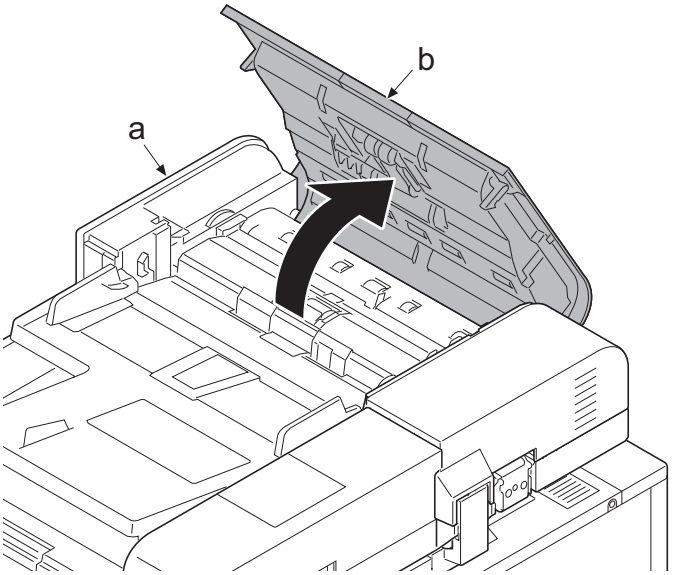

2 Remove one screw (a) and remove the DP rear left cover (b).

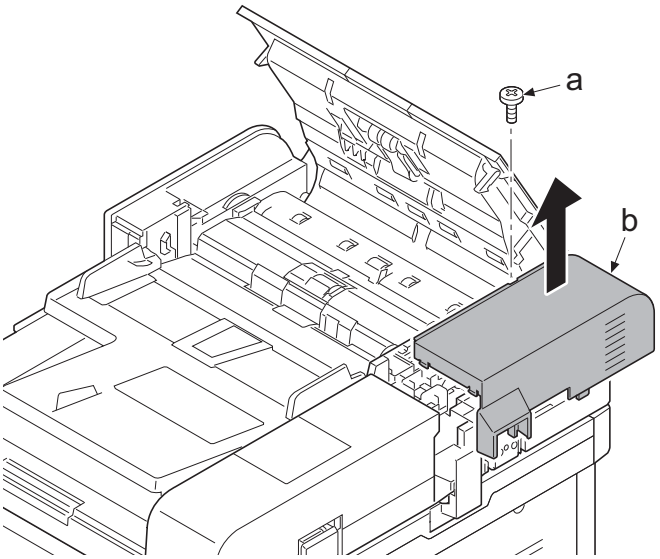

(4-3)Detaching and attaching the DP PWB

1 Open the DP top cover (b) of the document processor (a).

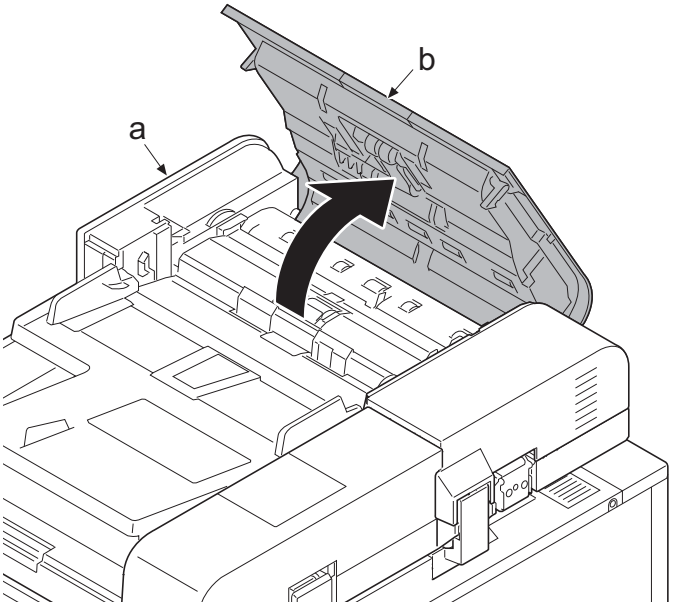

2 Remove one screw (a) and remove the DP rear left cover (b).

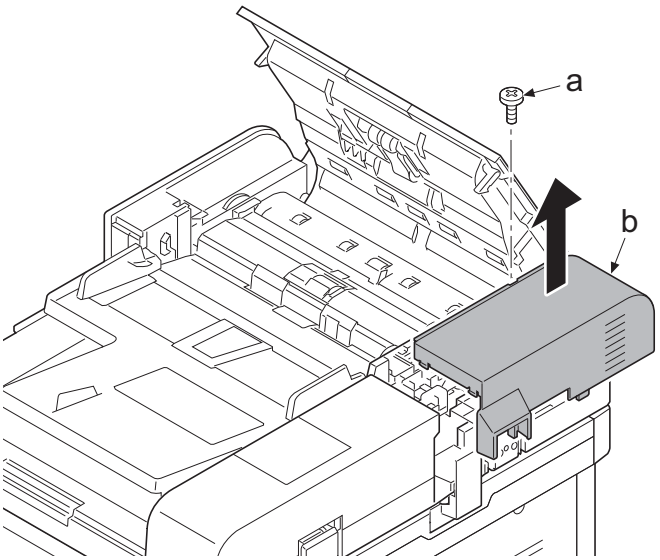

3 Open the lid (a) and remove the DP rear middle cover (b).

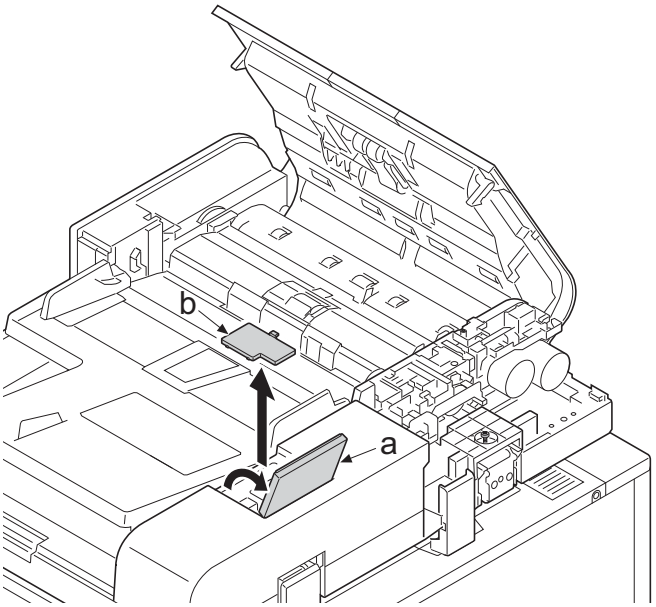

4 Remove one screw (a) and remove the DP rear right cover (b).

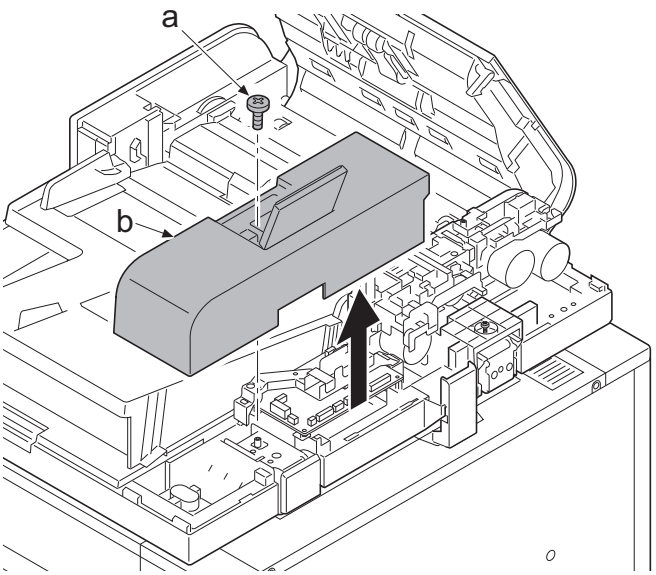

5 Remove two wire stoppers (a).

6 Remove one screw (b) and detach the wire guide (c).

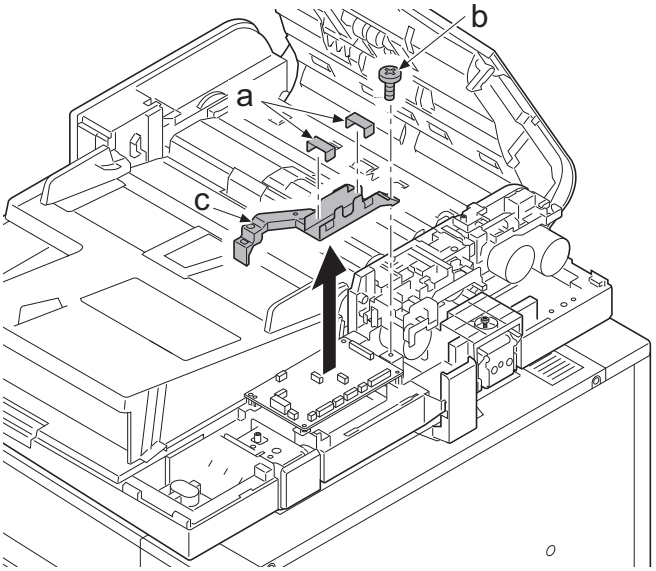

7 Disconnect all connectors from the DP PWB (b).

8 Remove four screws (a).

9 Detach the DP PWB (b) from the document processor (c).

10 Check or replace the DP PWB (b), and then reattach the parts in the original position.

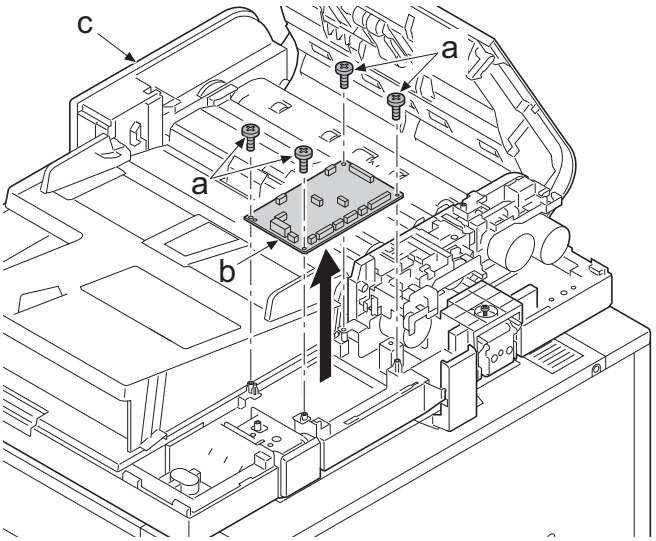

Notes for DP PWB replacement

- When replacing the DP PWB, make sure to remove the EEPROM from the old board and install it in the new board.
- Install the latest firmware after replacement.

(5)Document processor (DP-7160/DP-7170)

(5-1)Detaching and attaching the document processor

1 Open the document processor (a).

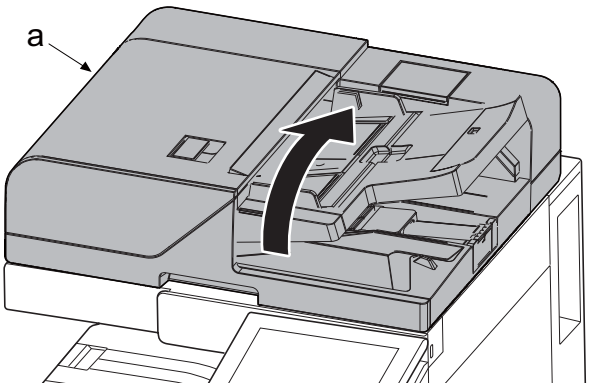

2 Remove a screw (a) (M3x10) and then remove the rear upper cover (b) by sliding in the direction of the arrow.

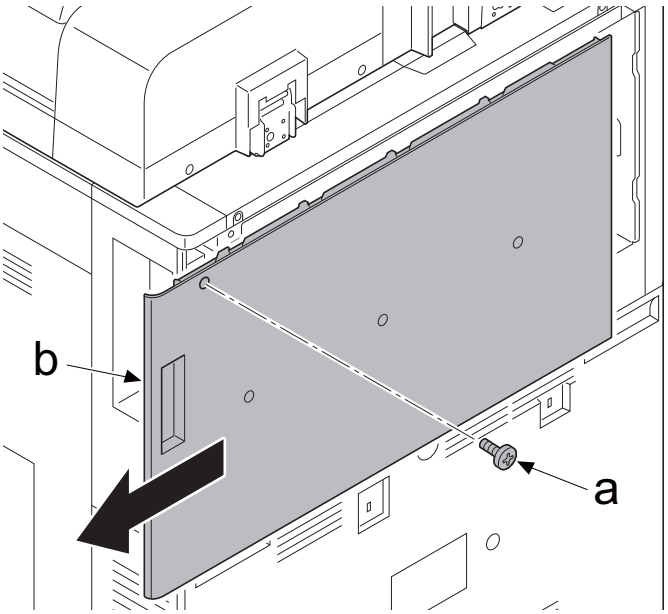

3 Remove two screws (a) and remove the DP rear cover (b).

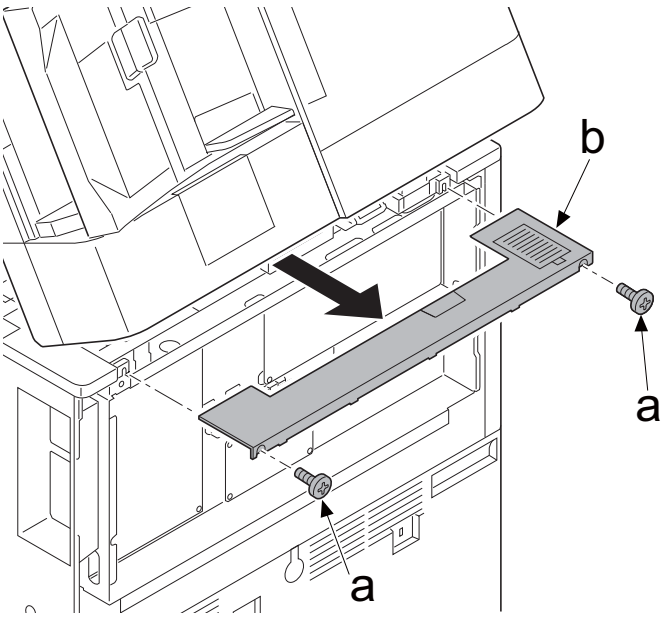

4 Close the document processor (a).

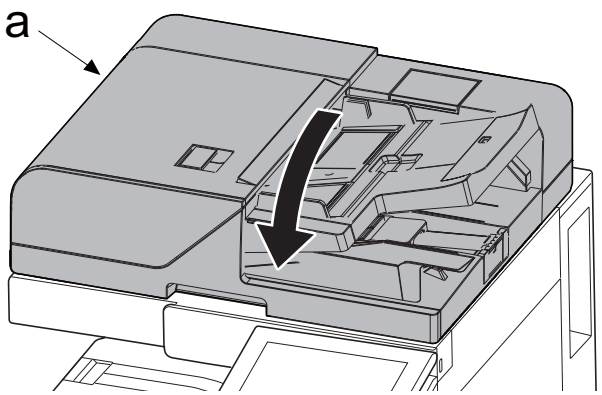

5 Detach the DP wire cover (a).

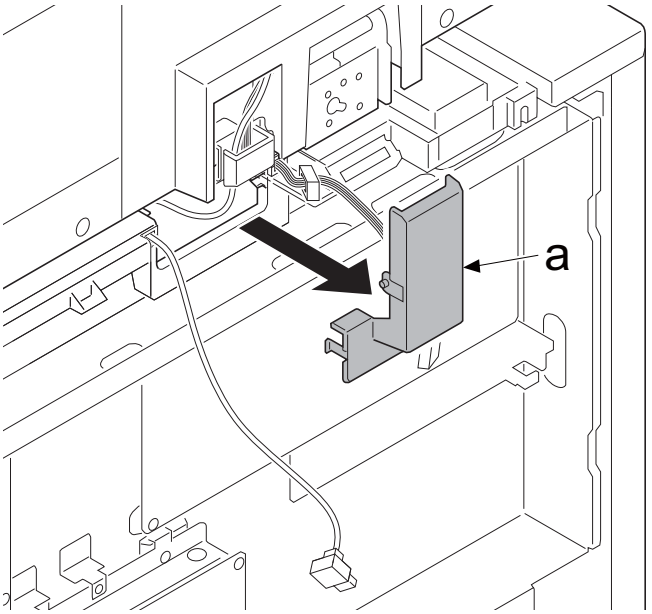

6 Disconnect the connector (a), release two wire saddle (b) and remove the DP wire (b).

7 Disconnect the connector (d), release three wire saddle (f) and remove the DP wire (e).

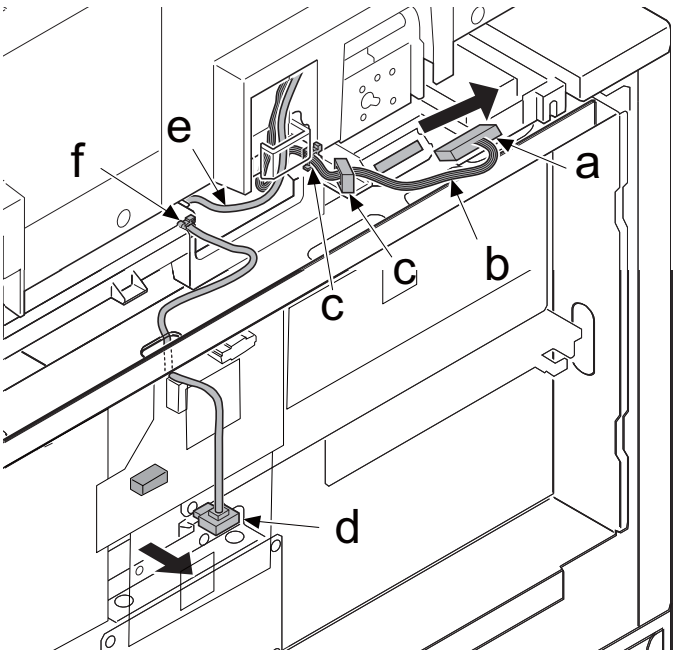

8 Remove the DP wire connector (a) from the wire holder (b).

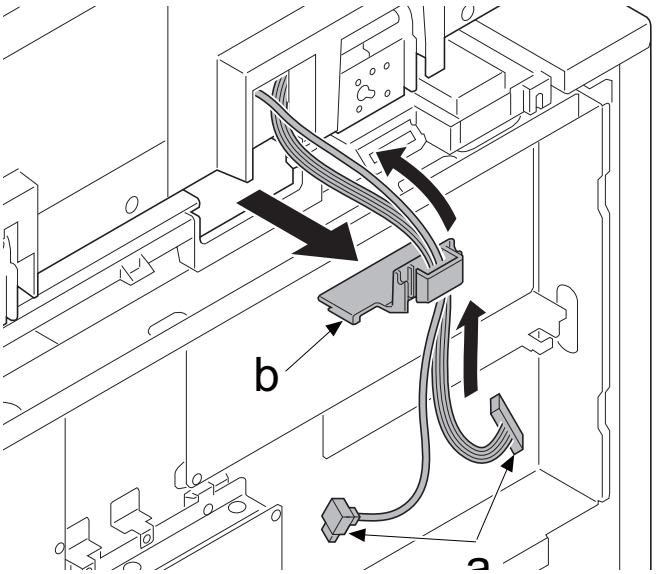

9 Open the document processor.

10 Remove two screws (a) and two pins (b).

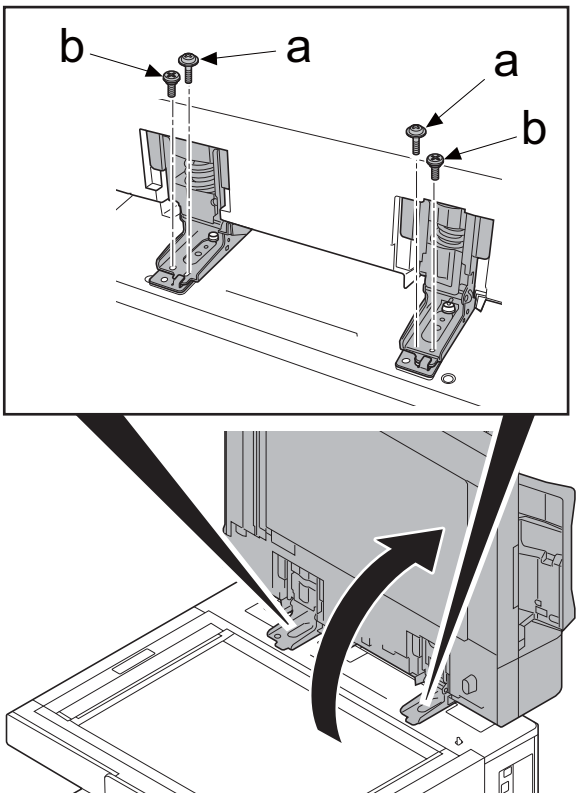

11 Slide the document processor (a) in the direction of the arrow and remove the hinge (c) from the main unit (b).

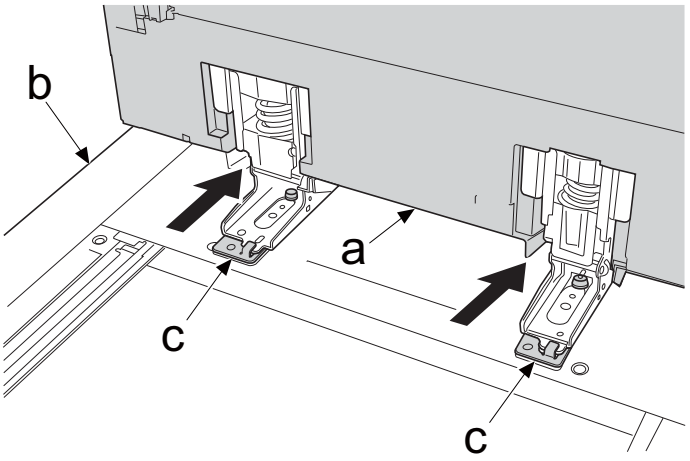

(5-2)Detaching and attaching the DP rear cover

1 Open the DP top cover (b) of the document processor (a).

2 Remove the strap (c) from DP top cover.

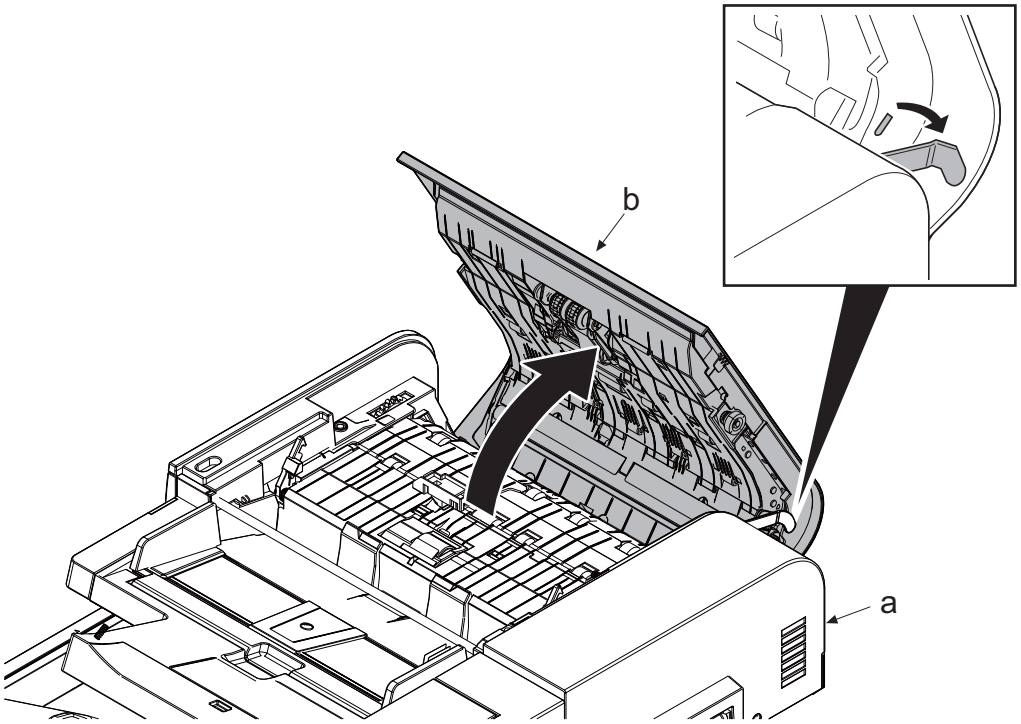

3 Remove four screws (a) and detach the DP rear cover (b).

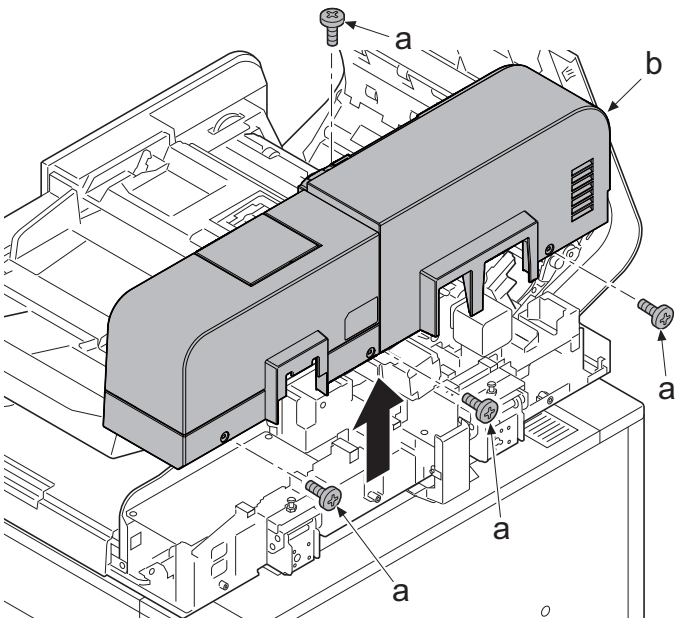

(5-3)Detaching and attaching the DP PWB

1 Open the DP top cover (b) of the document processor (a).

2 Detach the Strap (c) from the DP top cover (b).

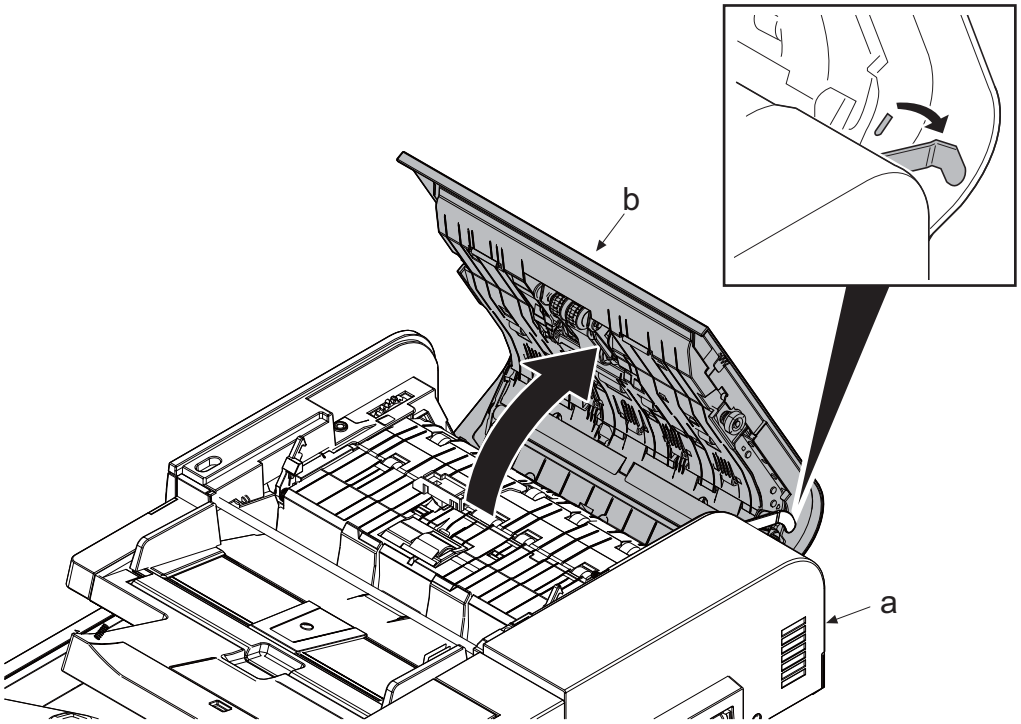

3 Remove four screws (a) and detach the DP rear cover (b).

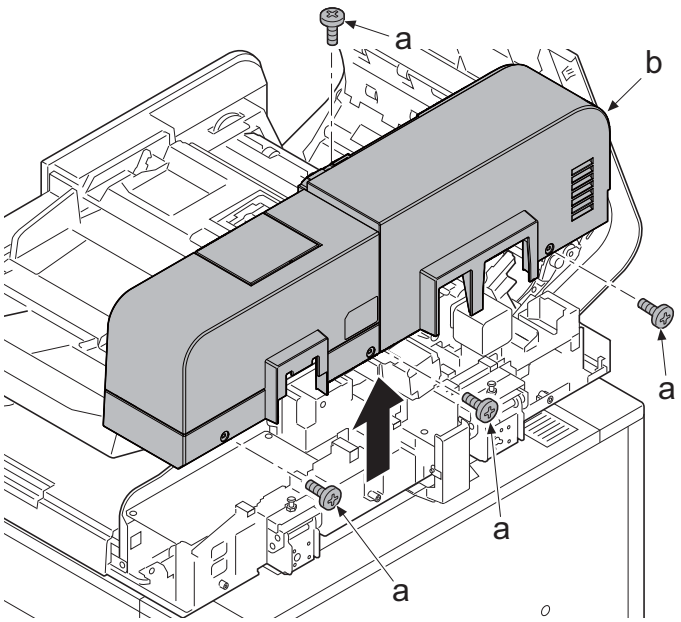

4 Disconnect all connectors from the DP PWB (b).

5 Remove two screws (a).

6 Detach the DP PWB (b) from the document processor (c).

7 Check or replace the DP PWB (b), and then reattach the parts in the original position.

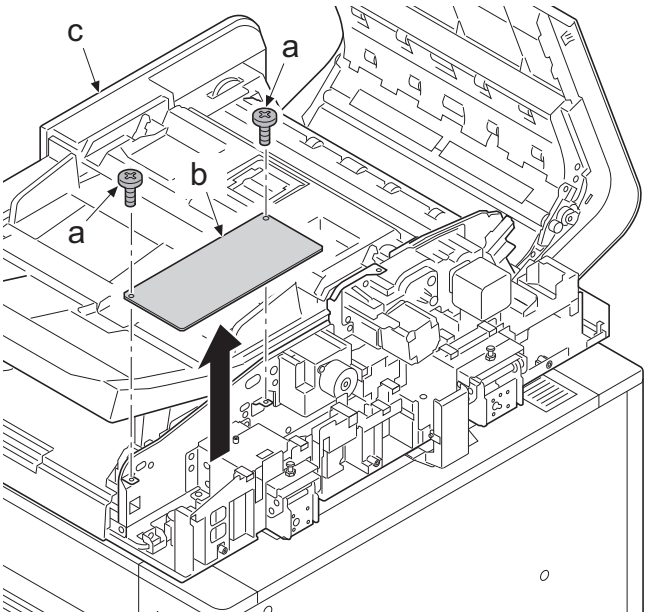

Notes for DP PWB replacement

- When replacing the DP PWB, make sure to remove the EEPROM from the old board and install it in the new board.
- Install the latest firmware after replacement.

(5-4)Detaching and attaching DPCIS

1 Open the DP top cover (b) of the document processor (a).

2 Detach the Strap (c) from the DP top cover (b).

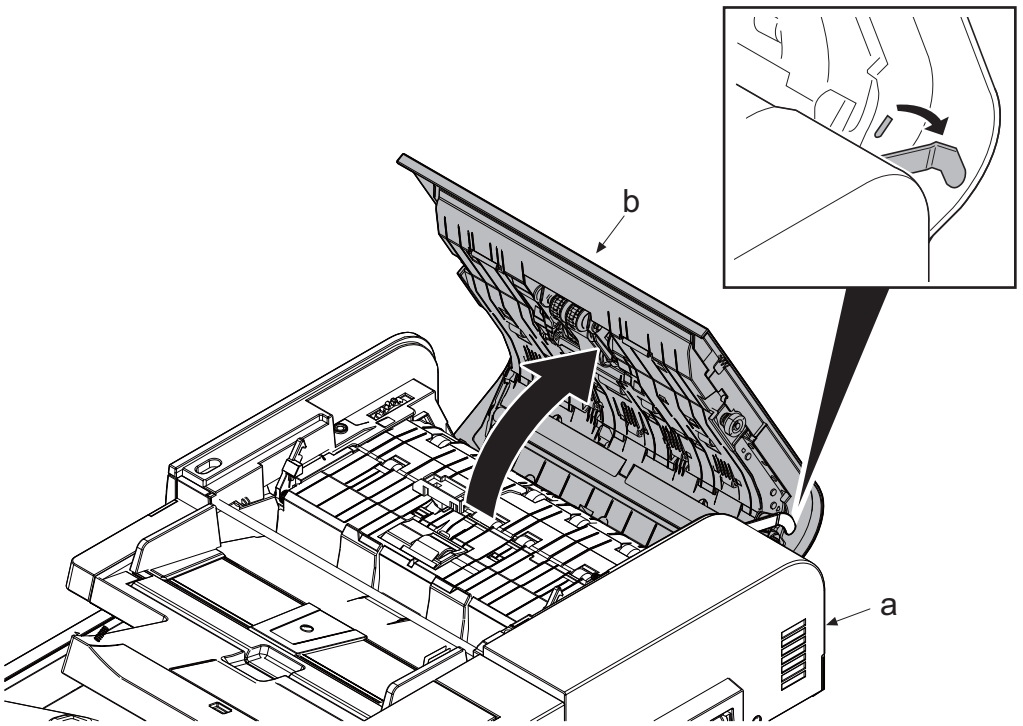

3 Remove four screws (a) and detach the DP rear cover (b).

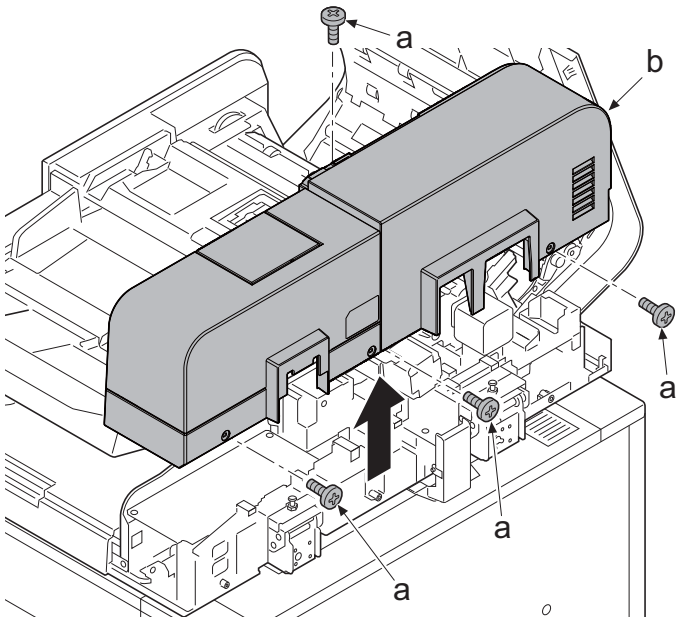

4 Remove two screws (b) at the machine rear side, detach DPCIS unit (a) the upward.

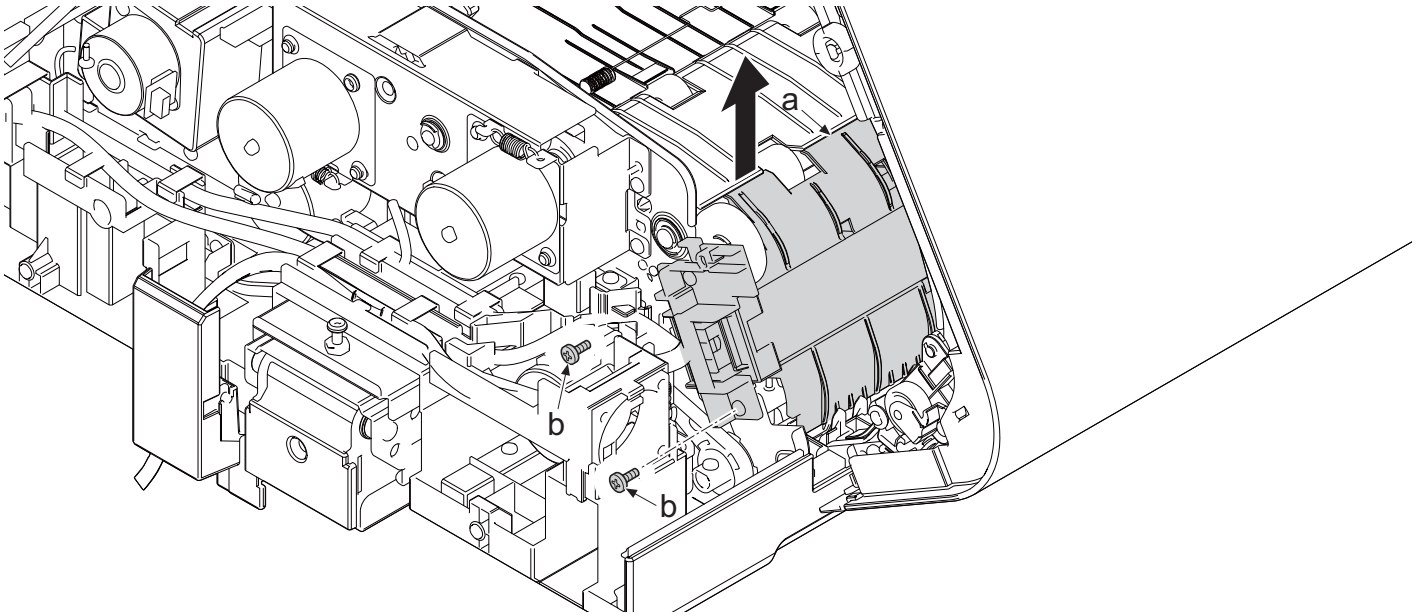

5 Disconnect two connectors (b) from the DPSHD PWB (a).

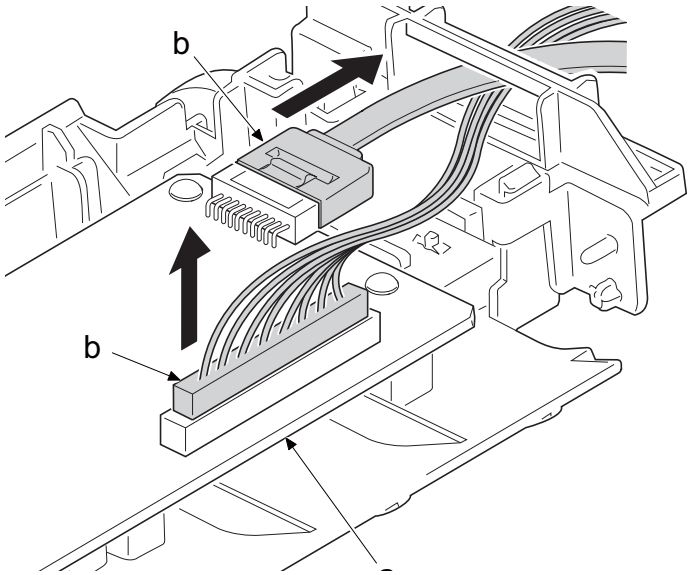

6 Pushing the two hooks (c) of the front and rear glass holder (b) in the direction of the arrow to unlatch them then take them away.

7 Take DPCIS glass (d) and DPCIS (e) from DPCIS unit (a)

- Pay attention about face/back of DPCIS glass when attaching the CIS glass.
  Pay attention to the marking in the figure.
  Miss the face/back or the marking leads paper dust contamination and it is affected scanning quality.

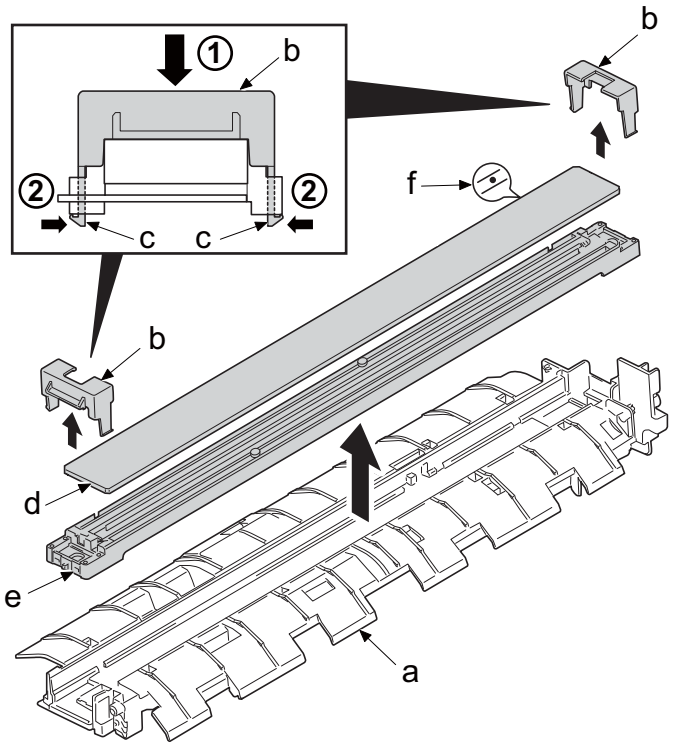

IMPORTANT

Check the position of black marking (f) for distinction of the face/back side of the glass.

Also, make sure not to touch the glass surface.

If it should get dirty, wipe it off with a dry cloth.

8 Disconnect the connector (e).

9 Remove four pins (c) with the flat-head screwdriver (b) and detach DPSHD PWB (d).

10 Replace the DPCIS and then reattach the parts in the original position.

11 When replacing the new DPCIS assembly, execute the following procedures.

12 Clean the CIS roller and contact glass (CIS).

13 Execute maintenance mode U091 (White lines correction setting). (See page page 6-89)

14 Make test copy with gray originals.

15 When white streak appears on the image of the test copy, executing step 13, 14 again, repeating till white streak disappears.

16 Execute maintenance mode U411 (scanner auto adjustment) (See page page 6-259)

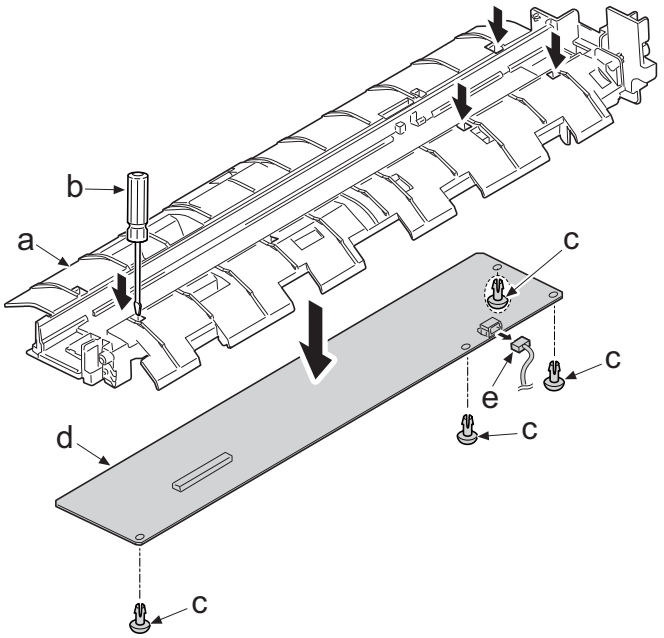

(6)Inner Shift tray (JS-7100)

(6-1)Detaching and attaching the Inner Shift tray unit

(6-2)Detaching and attaching the JS PWB

1 Open the front cover (a).

2 Remove two screws (b) of the left upper cover (d) and one screw (c) of the left lower cover (e).

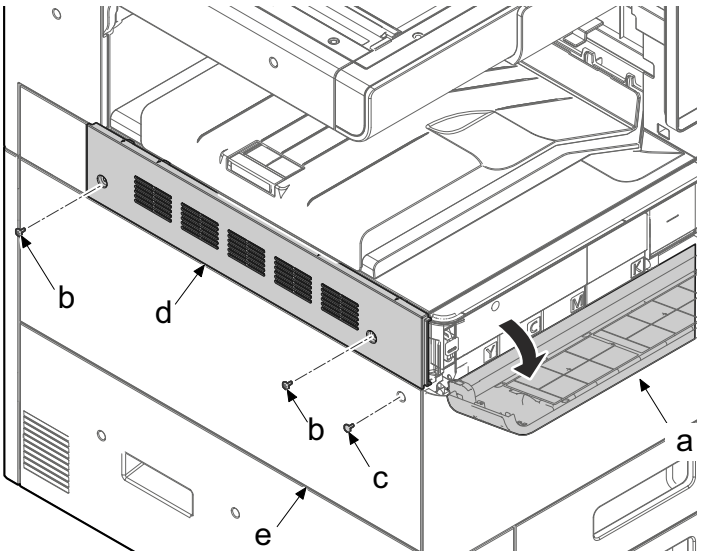

3 Remove the left upper cover (a).

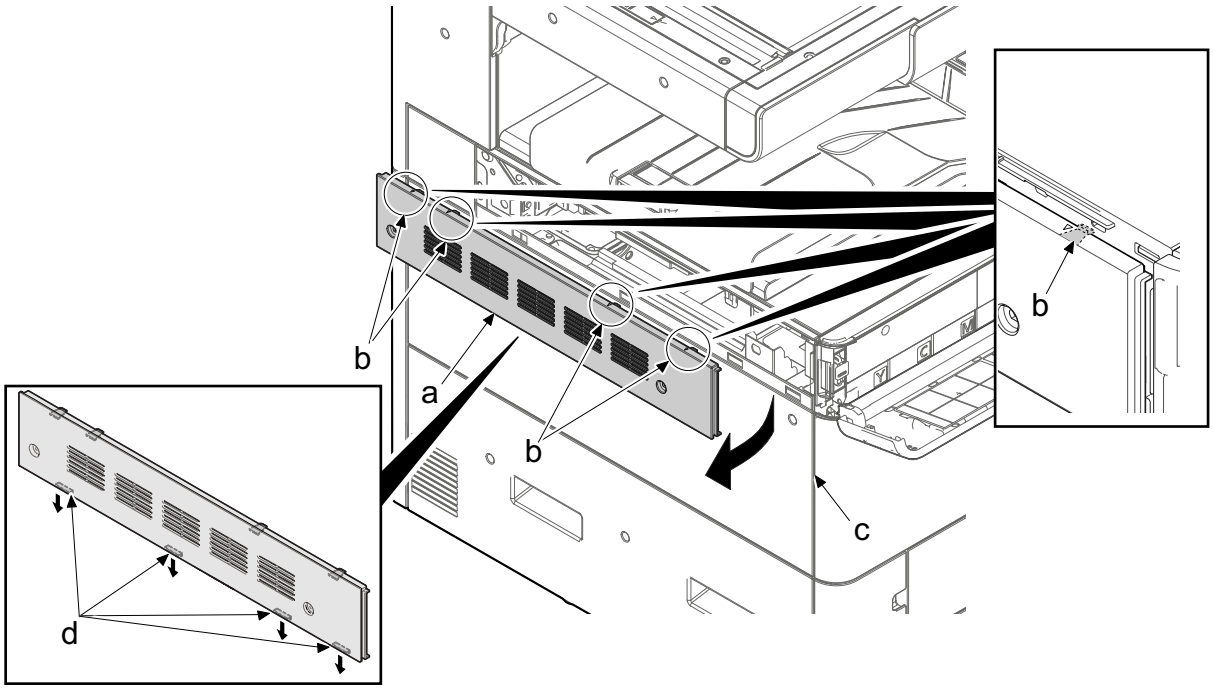

4 Remove the inner shift tray unit (a).

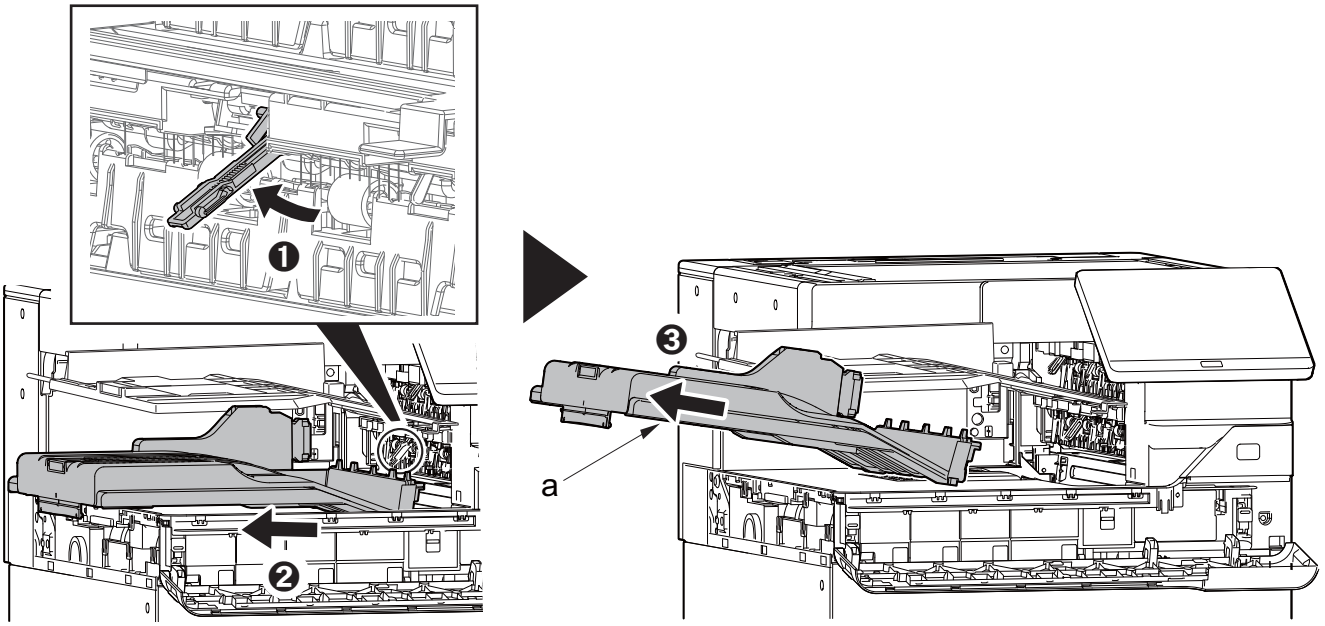

5 Remove the fixed pin (a) from the inner shift tray unit (b).

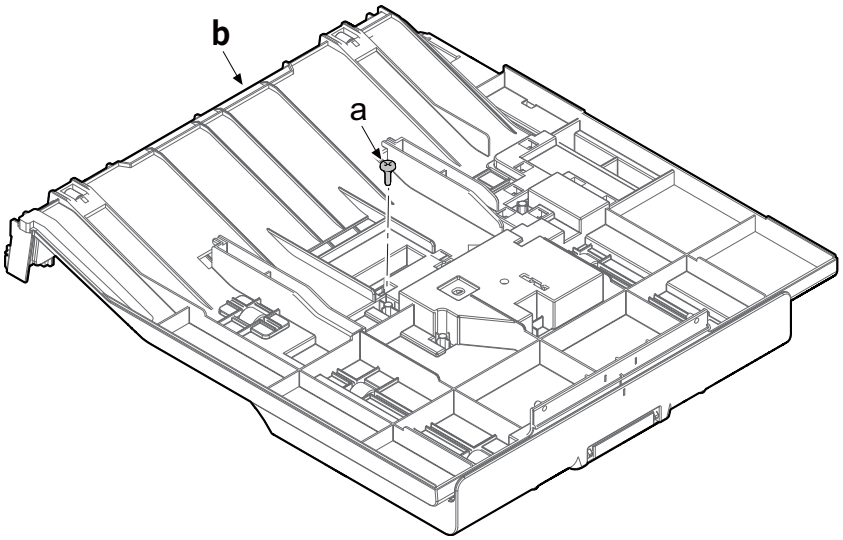

6 Release the hook (a1)/(a2)/(a3) and remove the shift tray (b) from the inner shift tray unit.

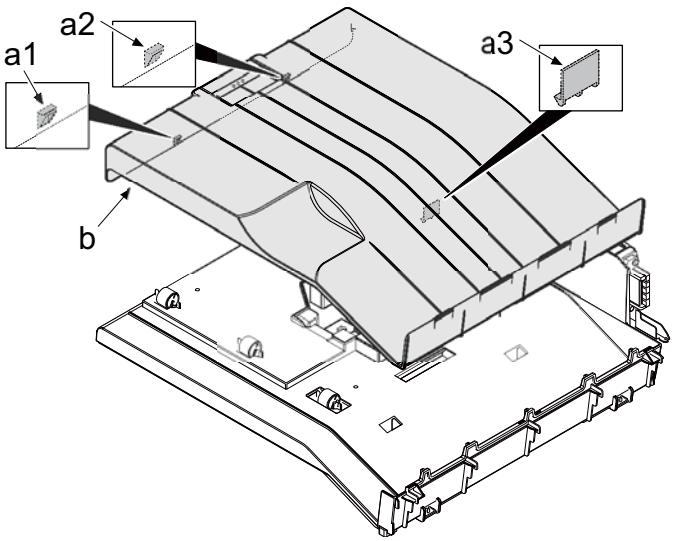

7 Remove the screw (a).

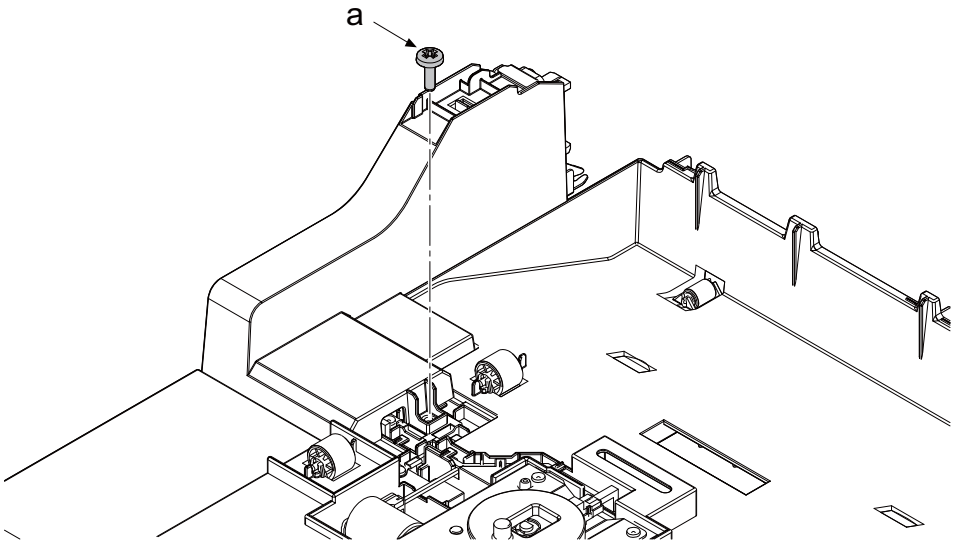

8 Release the hook (a) and remove the connector cover (b).

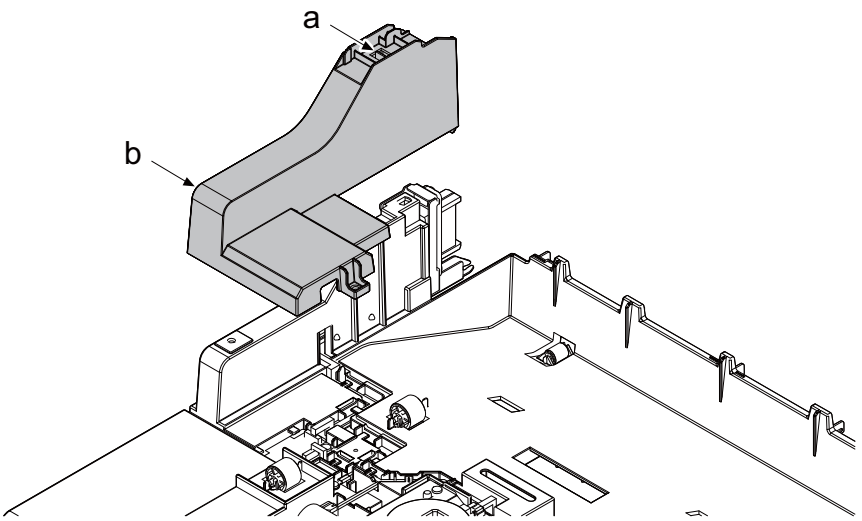

9 Remove two screws (a).

10 Disconnect the two connectors (b) and remove the JS PWB.

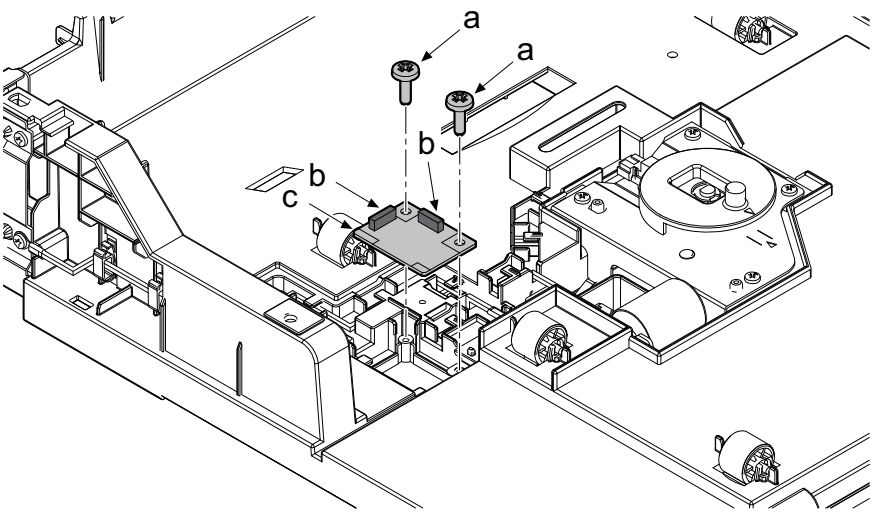

(7)Inner Finisher (DF-7100)

(7-1)Detaching and attaching the DF PWB

1 Slide the DF main unit (a) in the direction of the arrow.

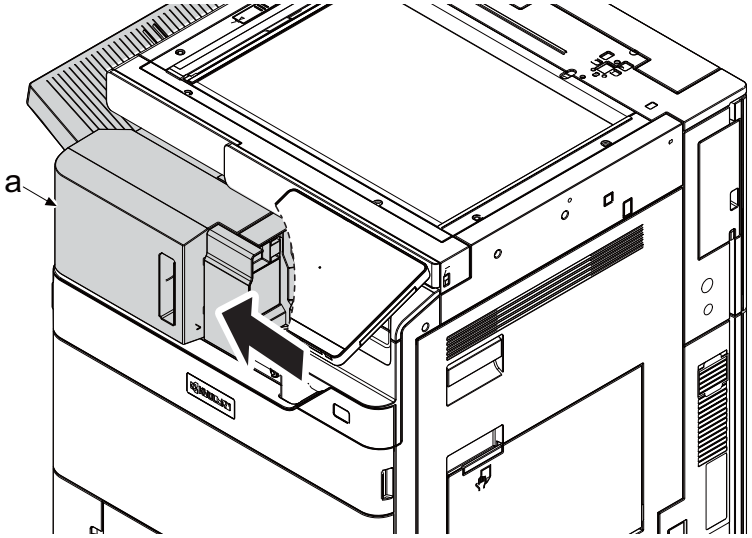

2 Open the staple cover (a).

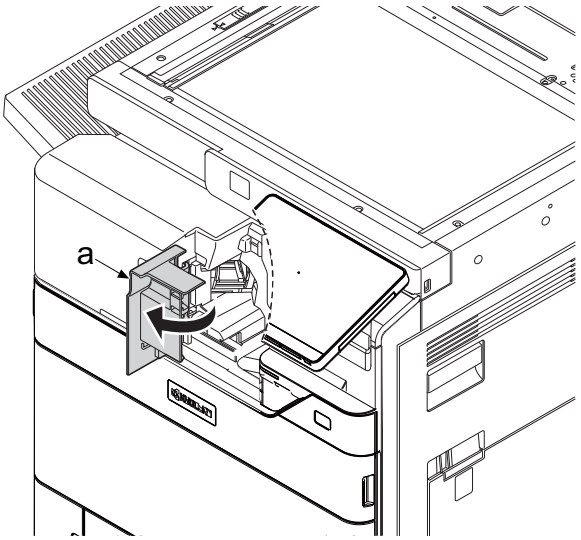

3 Remove the screw (a).

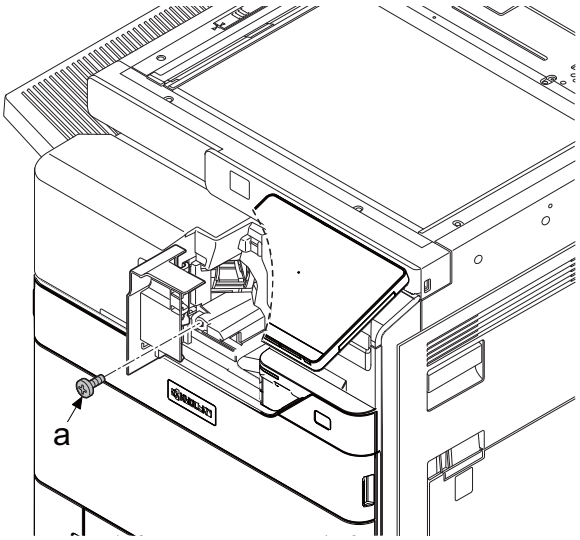

4 Remove the screw (a) .

5 Lift up the DF front cover (b) and unlatch two hooks (c) to remove it.

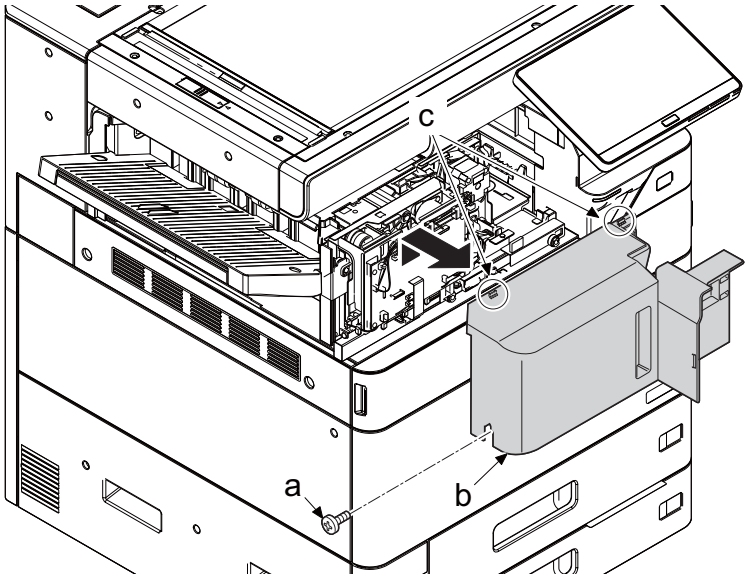

6 Disconnect all the connectors from the DF PWB (a).

7 Remove four screws (b) and detach the DF PWB (a).

8 Check or replace the DF PWB (a), and then reattach the parts in the original position.

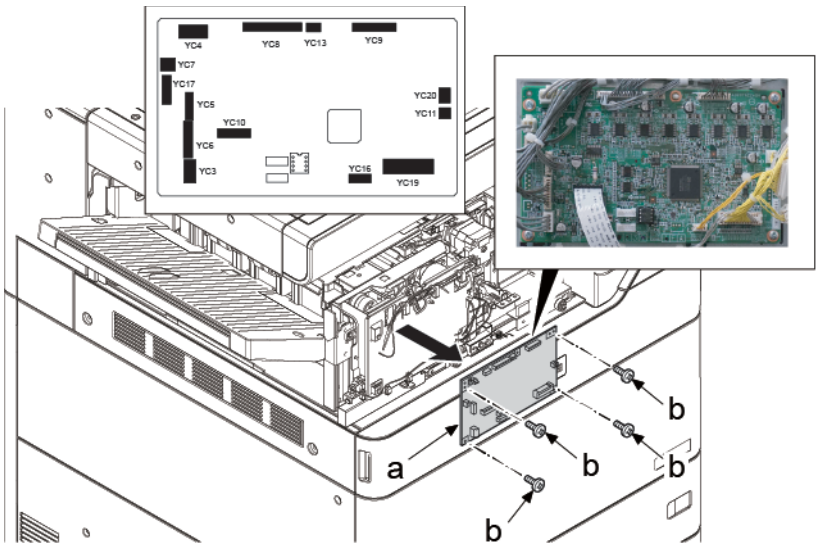

Notes for DF PWB replacement

- When replacing the DF PWB, make sure to remove the EEPROM from the old board and install it in the new board.
- Install the latest firmware after replacement.

(7-2)Detaching and attaching the staple unit

1 Open the front cover (a).

2 Remove two screws (b) from the left top cover (c) and the screw (d) from the left lower cover (e).

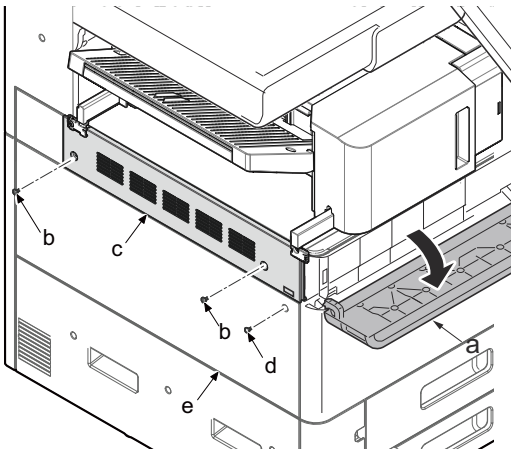

3 Release four hooks (b) in top of the left top cover while spread left lower cover (c) in the direction of the arrow, and remove the left top cover (a).

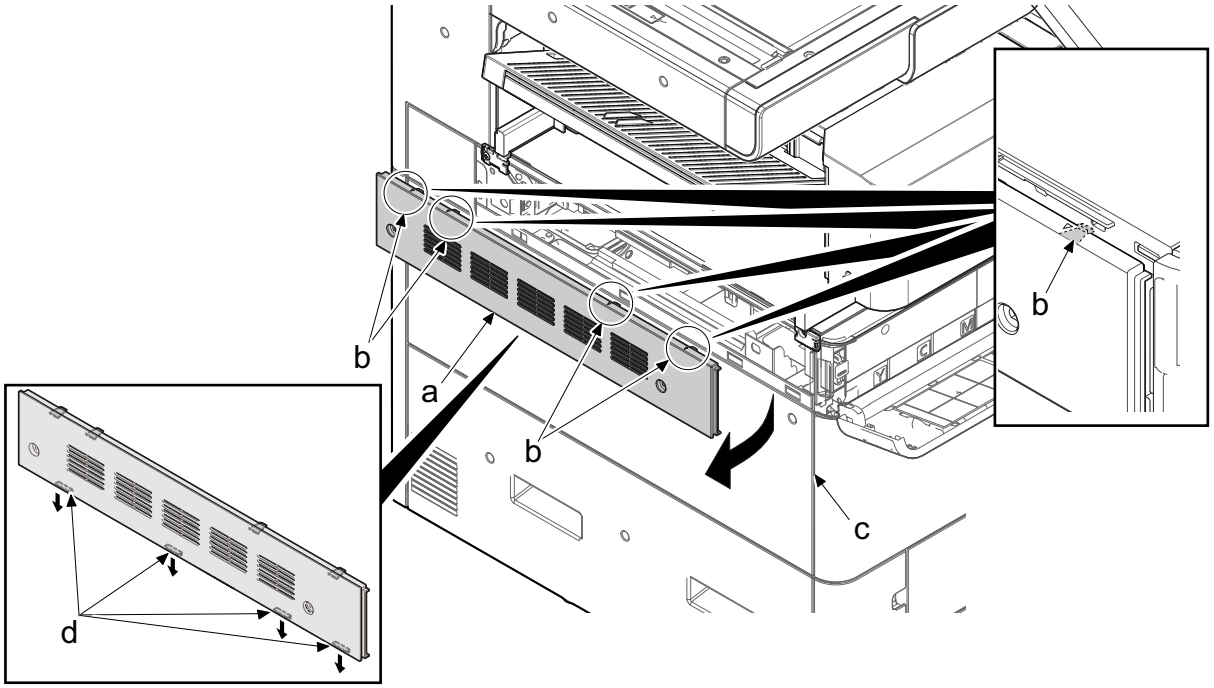

Notes for attaching

- Attach the top left cover (c) after latching four lower hooks (d) and then the upper hook (e).

4 Remove two screws (a) .

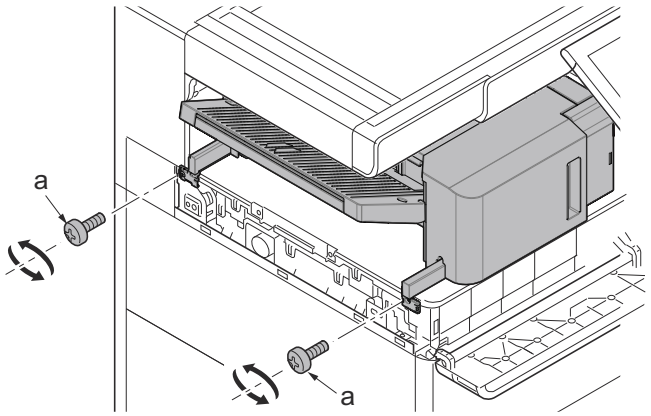

5 Slide the DF main unit (a) in the direction of the arrow.

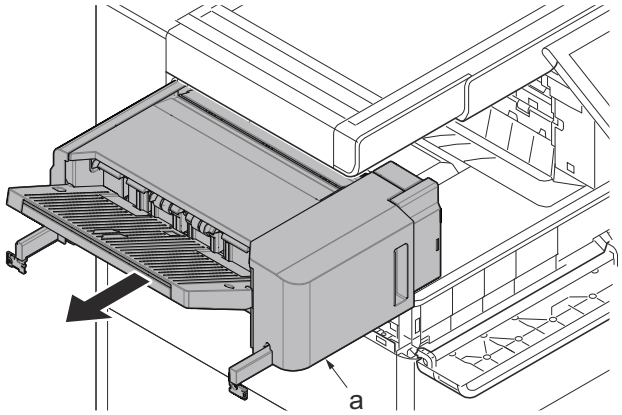

IMPORTANT

Do not get positions (b) to touch anything once place DF unit (a).

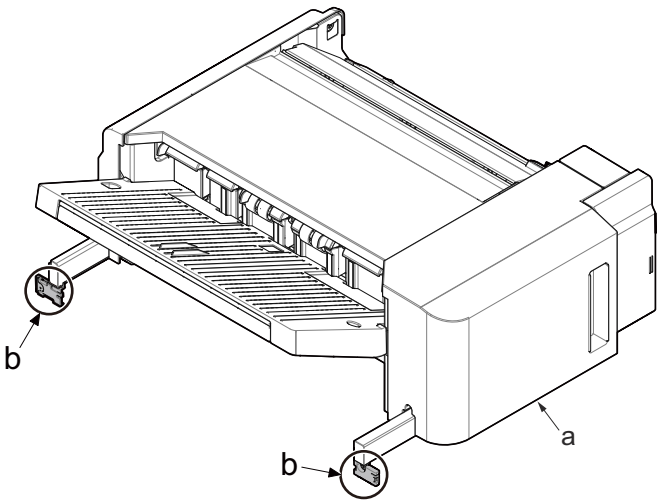

6 Get the DF unit (a) slide.

7 Open the staple cover (b).

8 Remove the screw (c) .

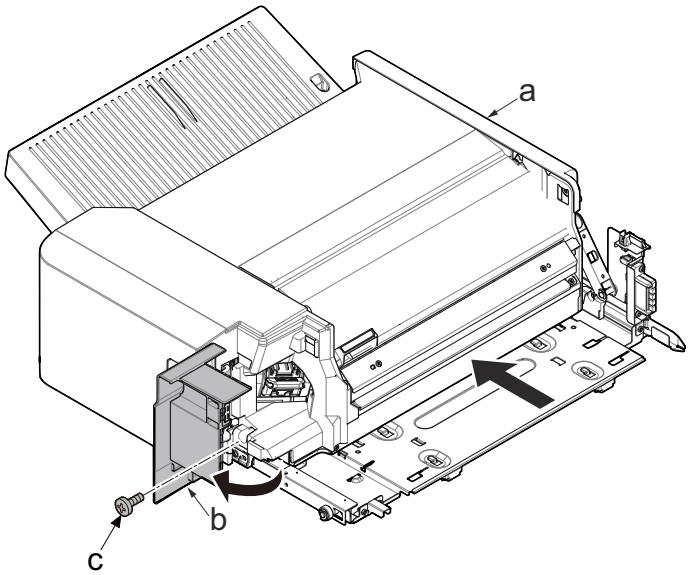

9 Remove the screw (a) .

10 Detach the upper exit cover (b) in the direction of the arrow.

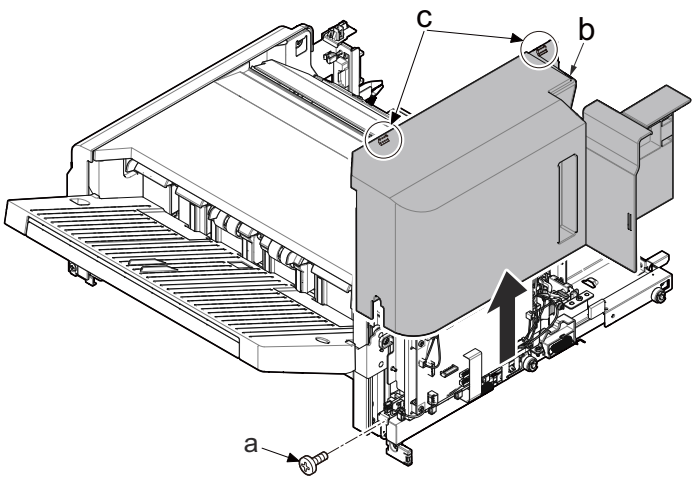

11 Pull out wire saddle (a).

12 Disconnect two connectors (b).

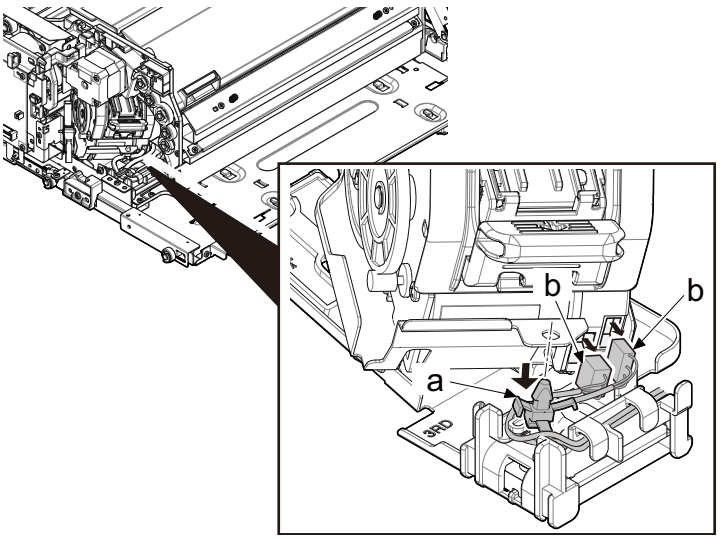

13 Get top of DF unit (f) down.

14 Slide drawer unit (b).

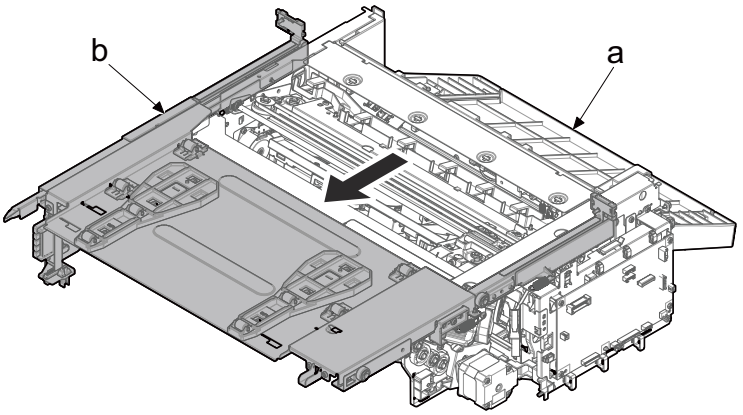

15 Remove the screw (a) .

16 Detach DF front sensor cover (b).

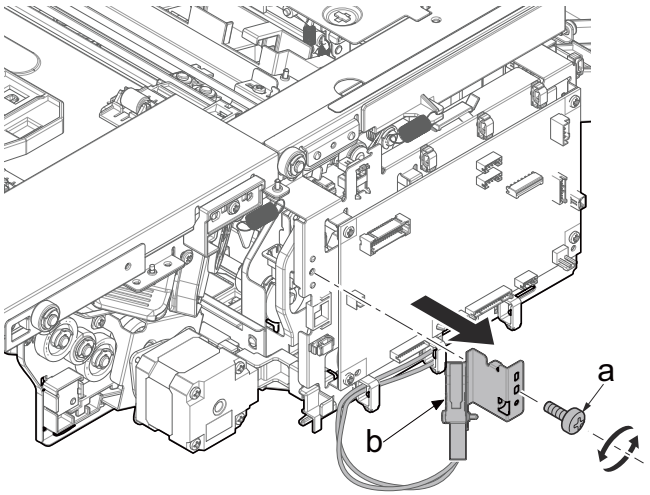

17 Slide DF staple unit (a) to center.

18 Remove two screws (b) .

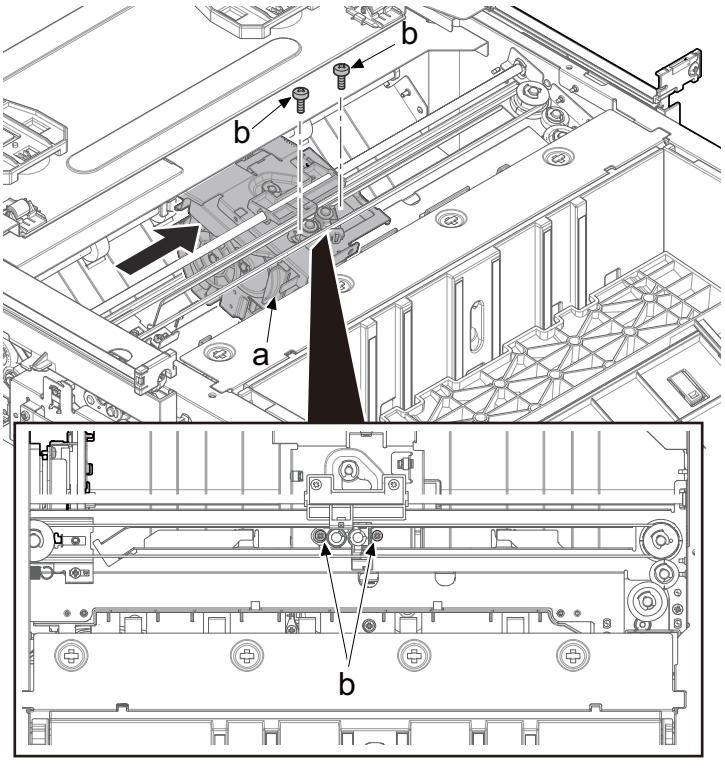

19 Slide the removed DF staple unit (a) without any interference with the mount.

20 Rotate it and make the gear up.

21 Rotate it and get the DF staple unit (c) to aperture (d) side.

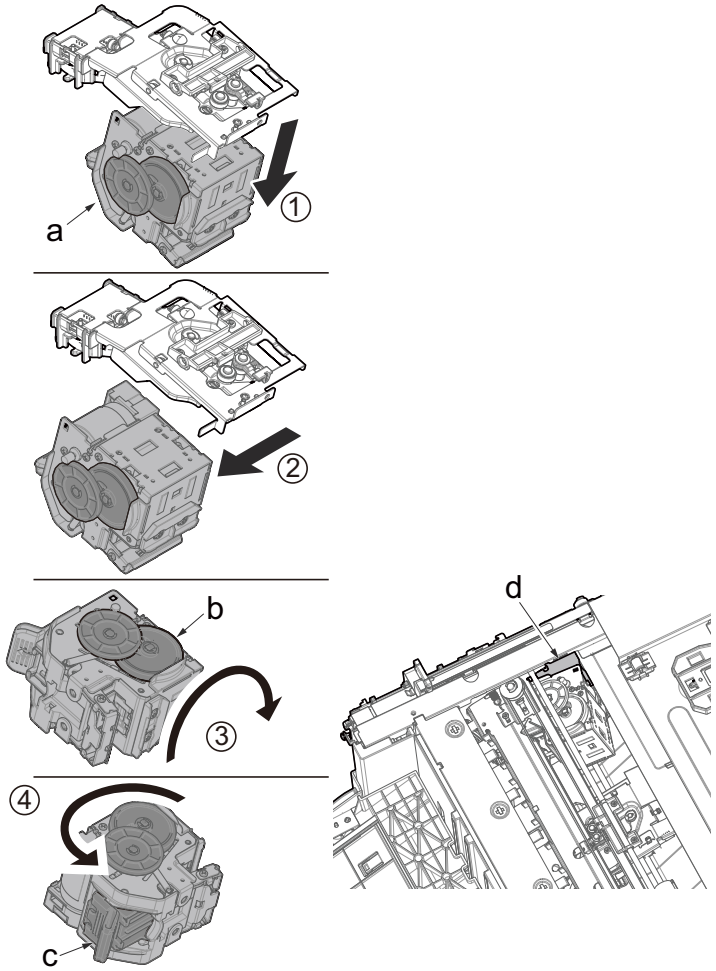

22 Pull out DF stable unit (a) from the aperture.

23 Check or replace the DF staple unit (a), and then reattach the parts in the original position.

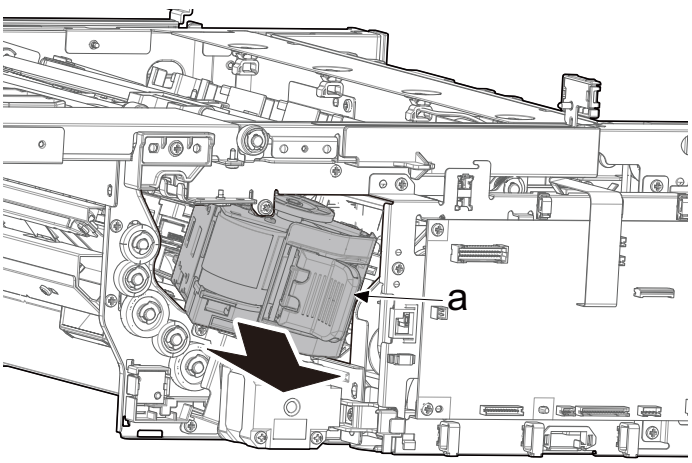

- In case of DF staple unit (a) replacement, detach staple guide (b) and attach to the new staple unit.

IMPORTANT

Be careful that damage on gear or other parts while the unit go through the aperture.

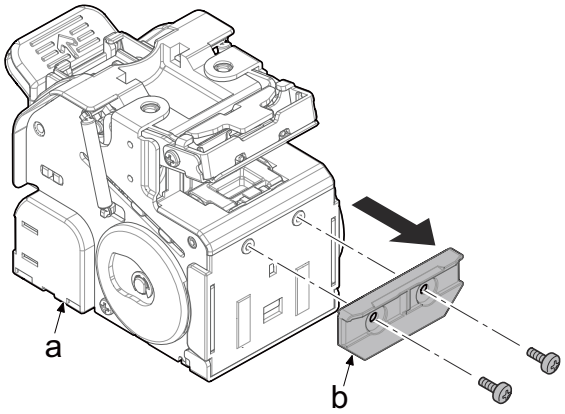

(8)Attachment Kit (AK-7110)

(8-1)Detaching and attaching BR convey motor

1 Remove three screws (a) and remove the rear cover (b) in the direction of the arrow.

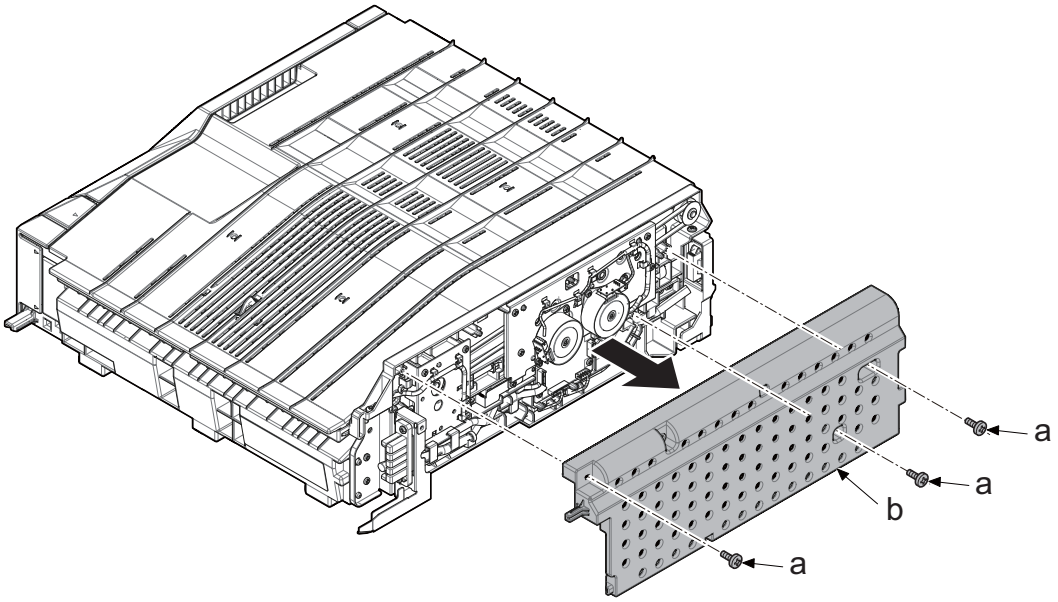

2 Disconnect two connectors (a).

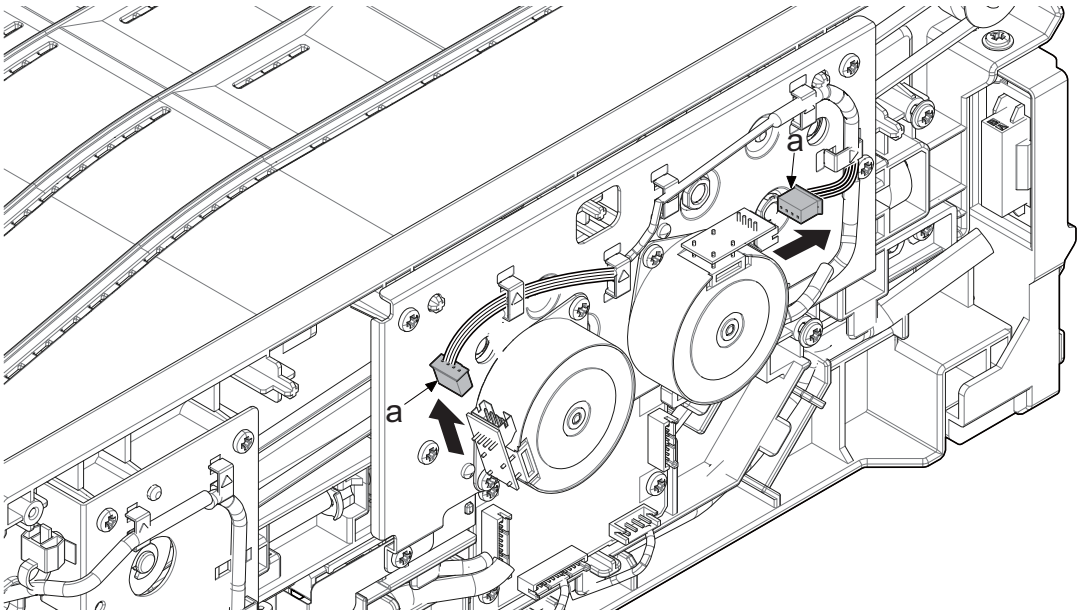

3 Remove 2 screws (a) and detach BR convey motor 1 (b) and 2 (c).

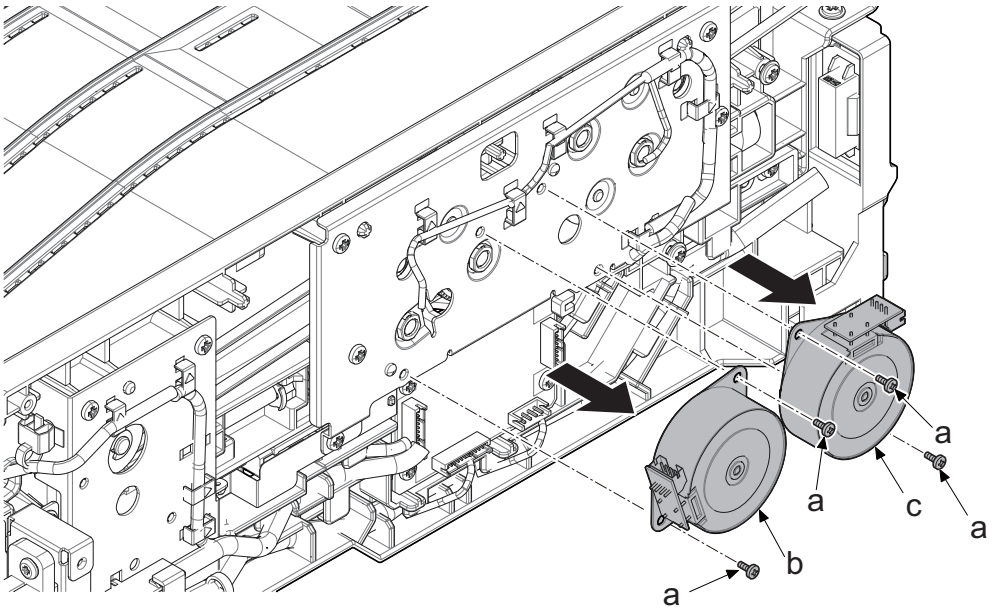

4 Check or replace the BR convey motor 1 or 2, and then reattach the parts in the original position.

(8-2)Detaching and attaching the BR PWB

1 Remove three screws (a) and remove the rear cover (b) in the direction of the arrow.

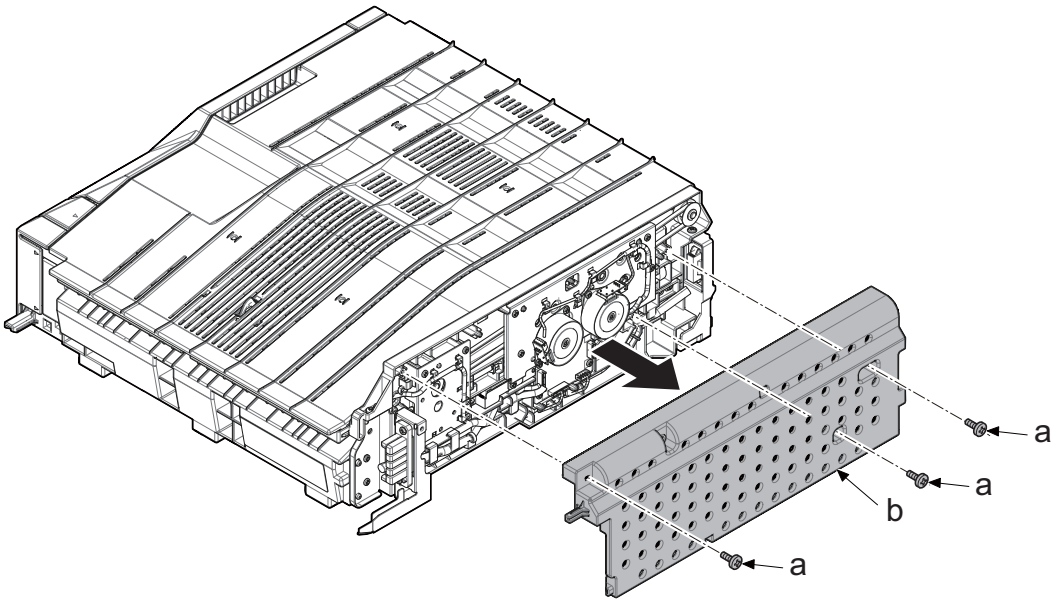

2 Disconnect all connector.

3 Remove three screws (a) and remove the BR PWB (b) in the direction of the arrow.

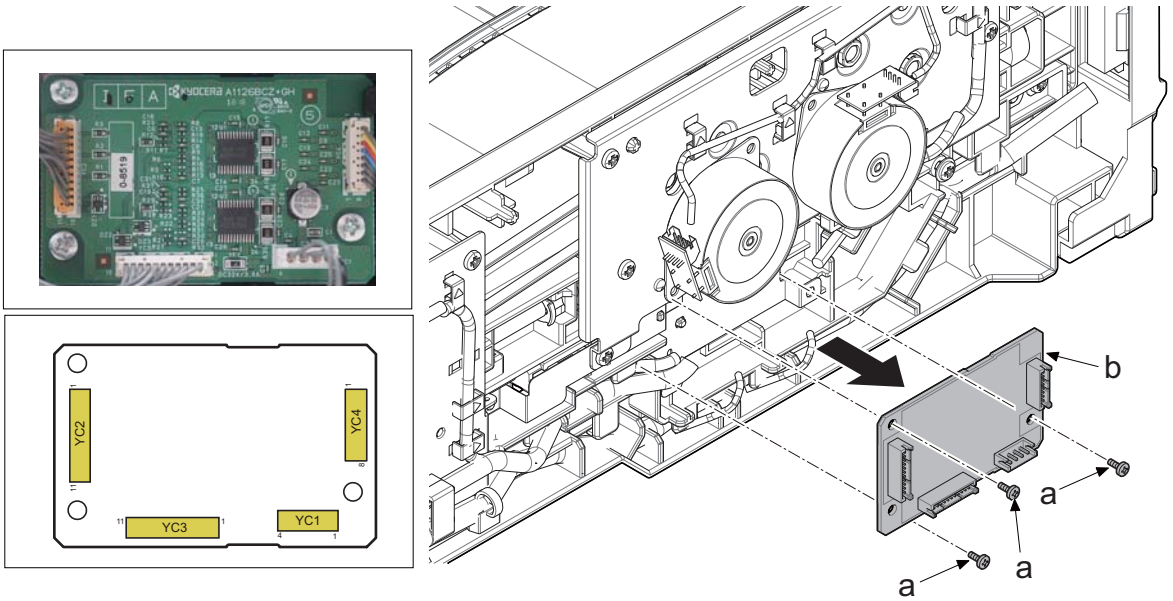

4 Check or replace the BR PWB (b), and then reattach the parts in the original position.

(9)1000-sheet Finisher (DF-7120)

(9-1)Detaching and attaching the DF staple unit

1 Open the DF front cover (a).

2 Pull out the waste punch box (b) and then remove it.

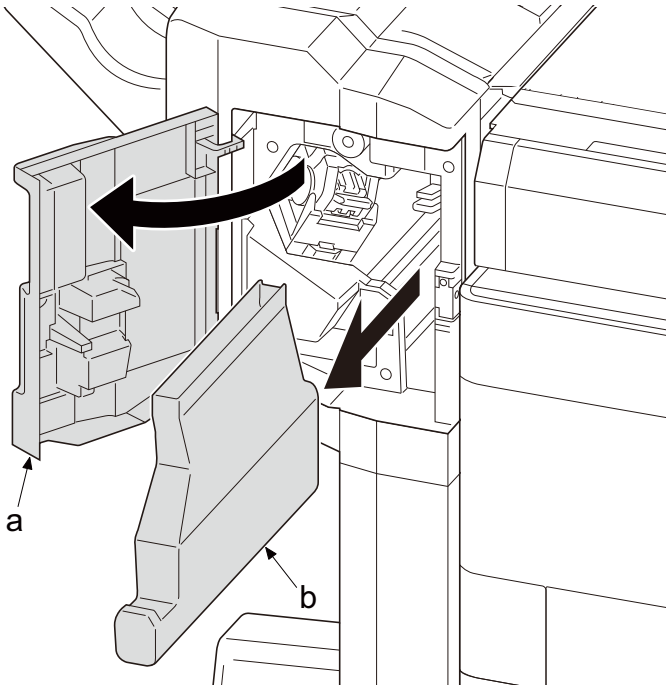

3 Insert a flat-head screwdriver (c) under the lever (b) of the staple cover (a) and lift it up to release the lock and open the DF staple cover (a).

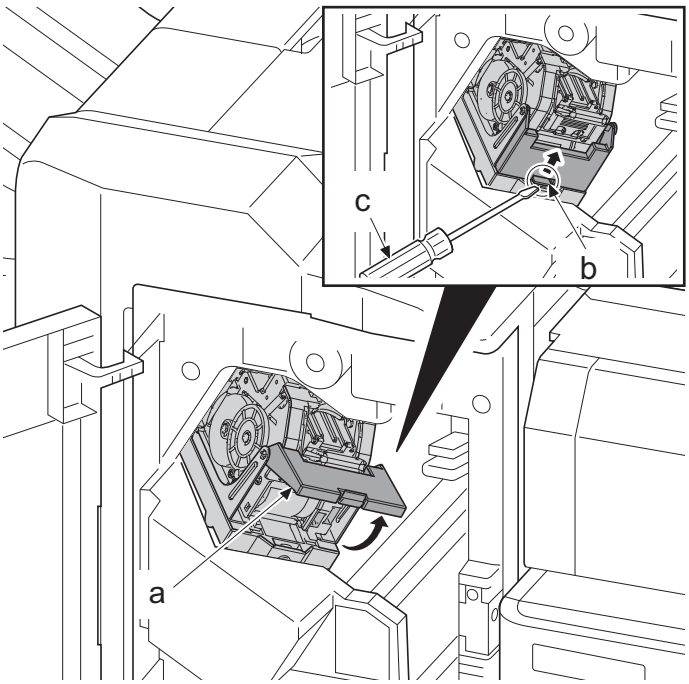

4 Disconnect two connectors (b) from the DF staple unit (a).

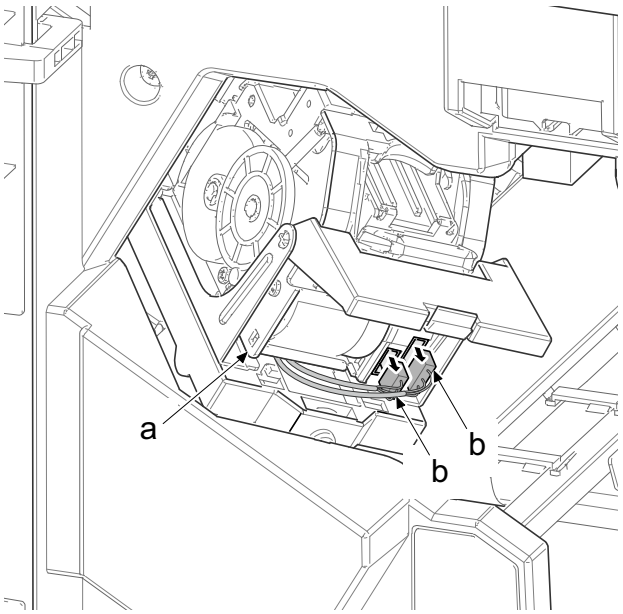

5 Lift up the DF staple unit (a) from the front side to release the hook (b) and pull it out toward you.

6 Check or replace the DF staple unit (a), and then reattach the parts in the original position.

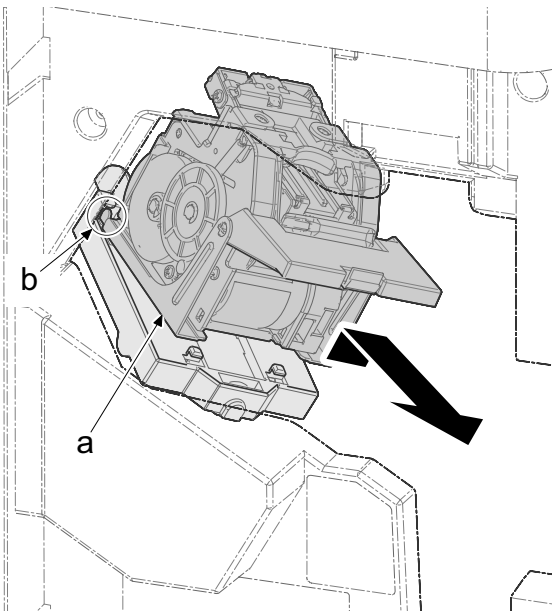

- When replacing the DF staple unit (a), detach the staple guide (b) and staple mounting plate (c) to attach the new DF staple unit.

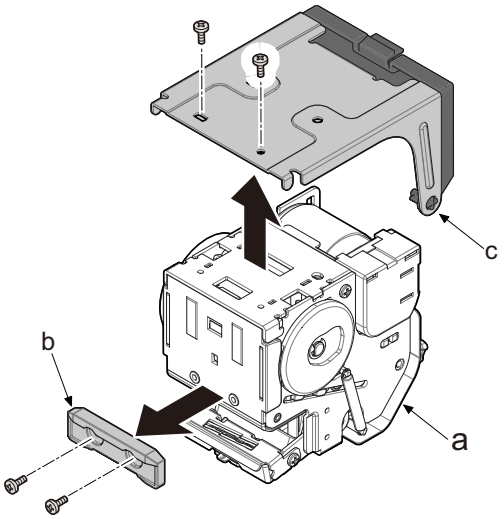

(9-2)Detaching and attaching the DF PWB

1 Remove the screw (a) .

2 Detach the lid (b).

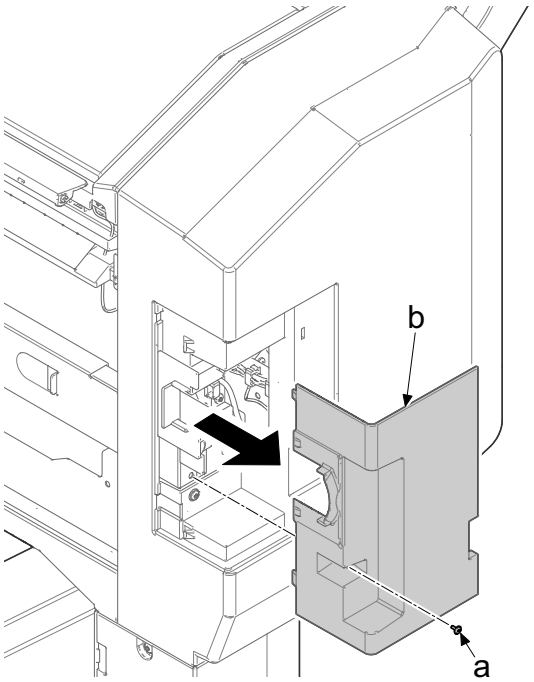

3 Remove two screws (a) .

4 Release three hooks (b) and remove the DF rear cover (c).

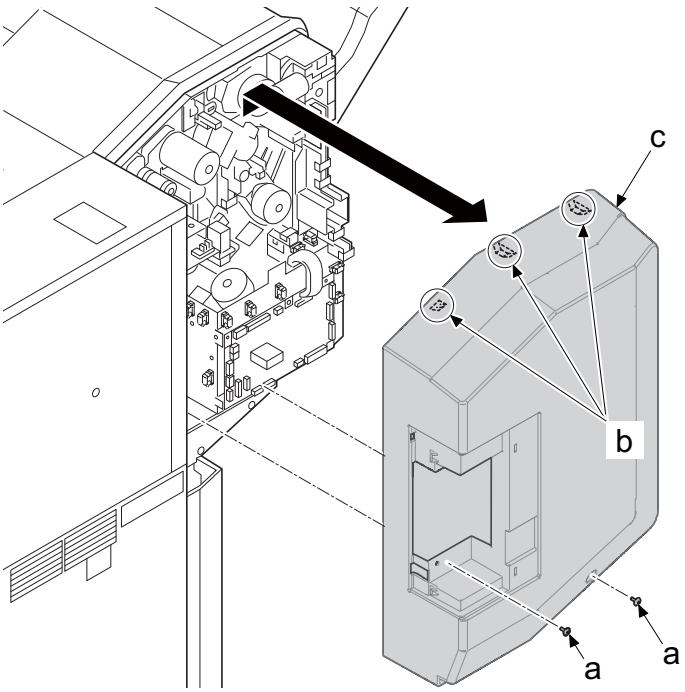

5 Disconnect all the connectors from the DF PWB (a).

6 Remove four screws (b) .

7 Remove the board support (c) and remove the DF PWB (a).

8 Check or replace the DF PWB (a), and then reattach the parts in the original position.

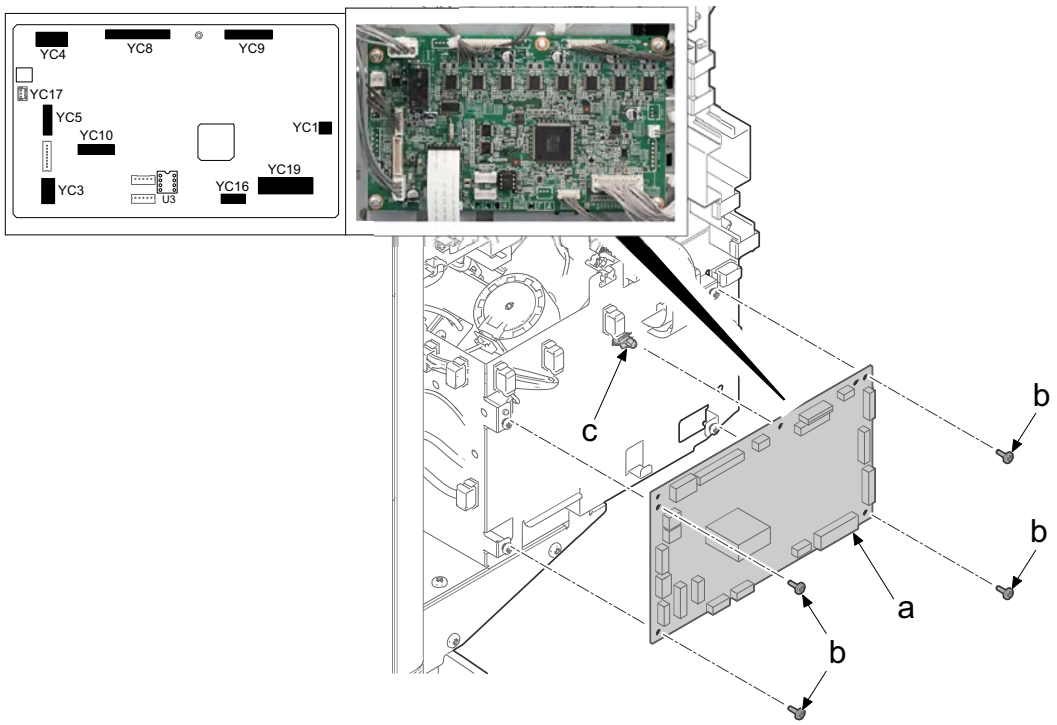

Notes for DF PWB replacement

- When replacing the DF PWB, make sure to remove the EEPROM from the old board and install it in the new board.
- Install the latest firmware after replacement.

(10)4000-sheet Finisher (DF-7140)

(10-1)Detaching and attaching the DF staple unit

1 Open the DF front cover (a).

2 Pull out the waste punch box (b) and then remove it.

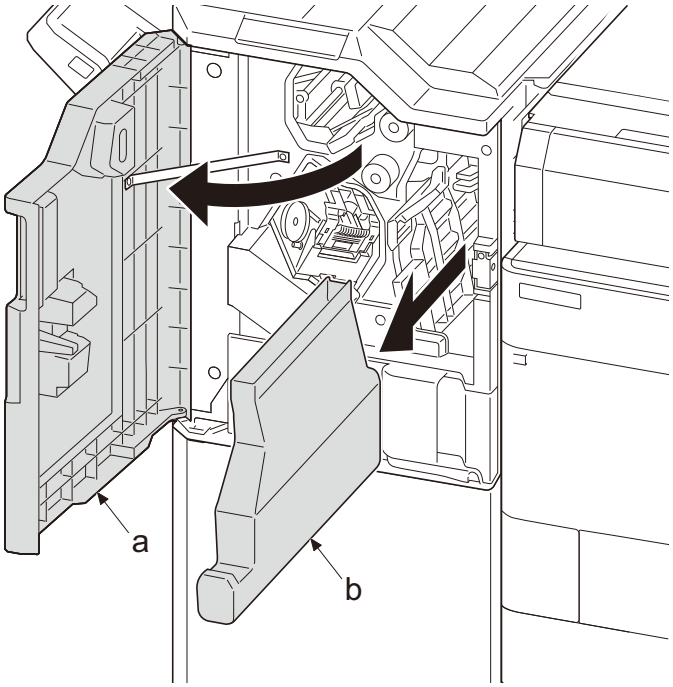

3 Insert a flat-head screwdriver (c) under the lever (b) of the staple cover (a) and lift it up to release the lock and open the DF staple cover (a).

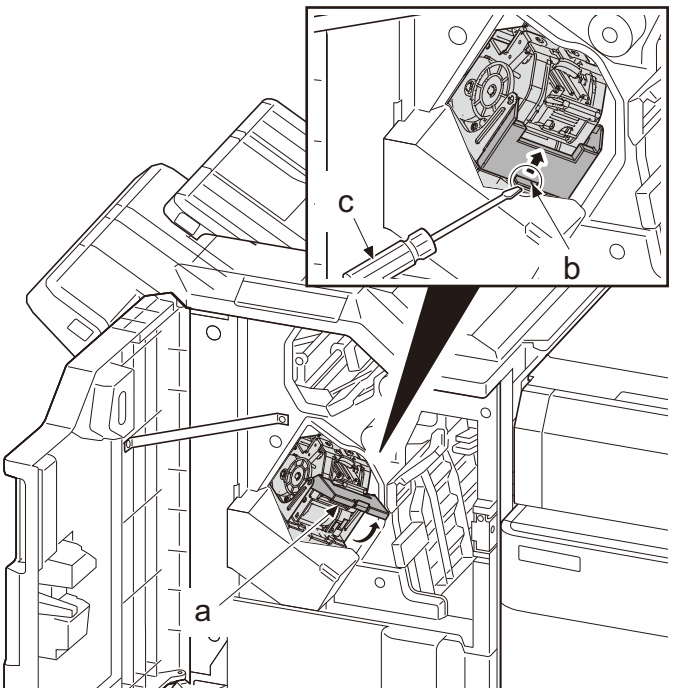

4 Disconnect two connectors (b) from the DF staple unit (a).

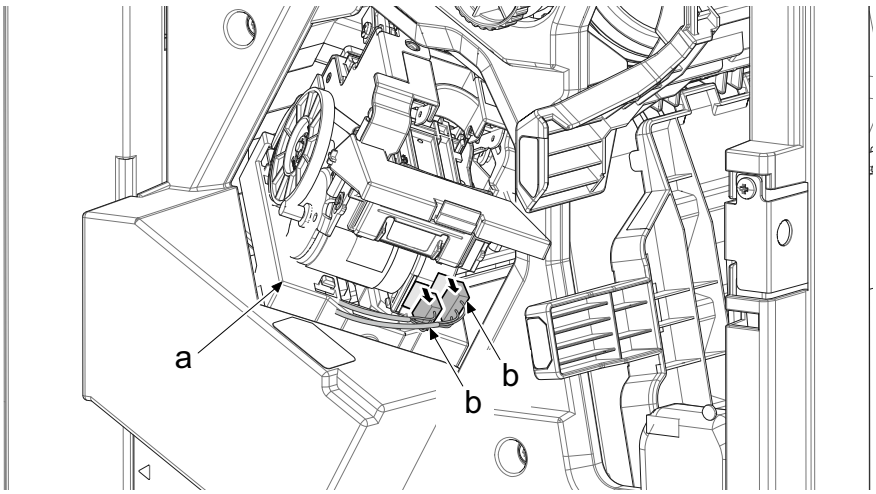

5 Lift up the DF staple unit (a) from the front side to release the hook (b) and pull it out toward you.

6 Check or replace the DF staple unit (a), and then reattach the parts in the original position.

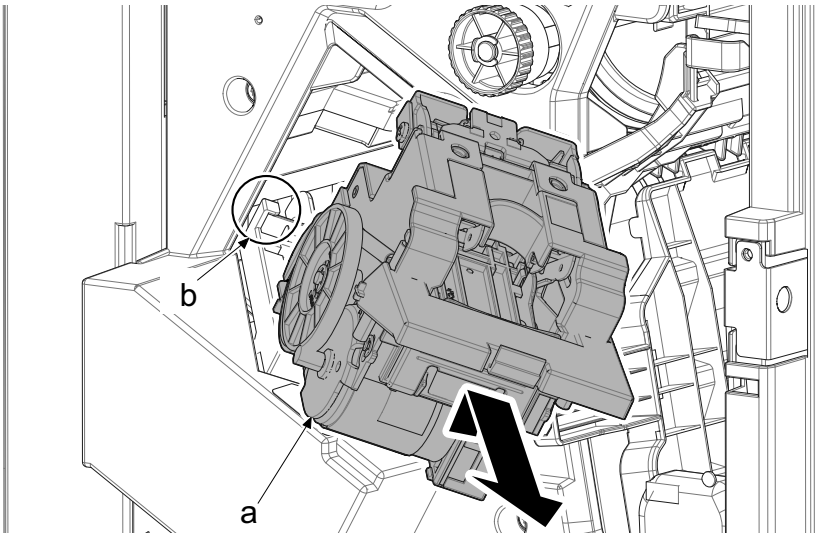

- When replacing the DF staple unit (a), detach the staple guide (b) and staple cover (c) to attach the new DF staple unit.

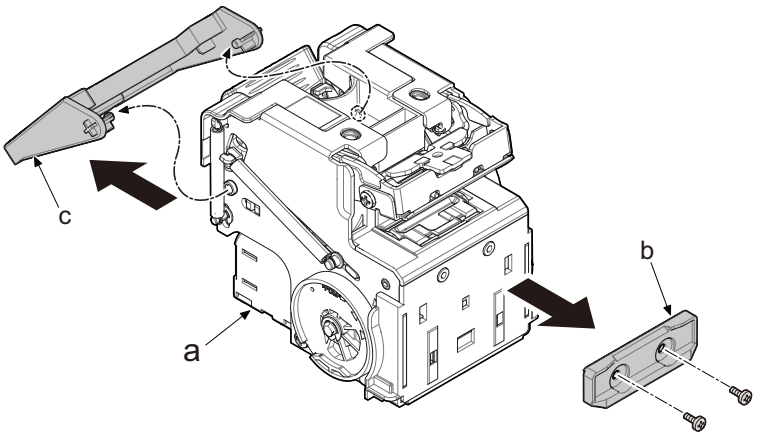

(10-2)Detaching and attaching the DF PWB

1 Remove the screw (a) .

2 Detach the lid (b).

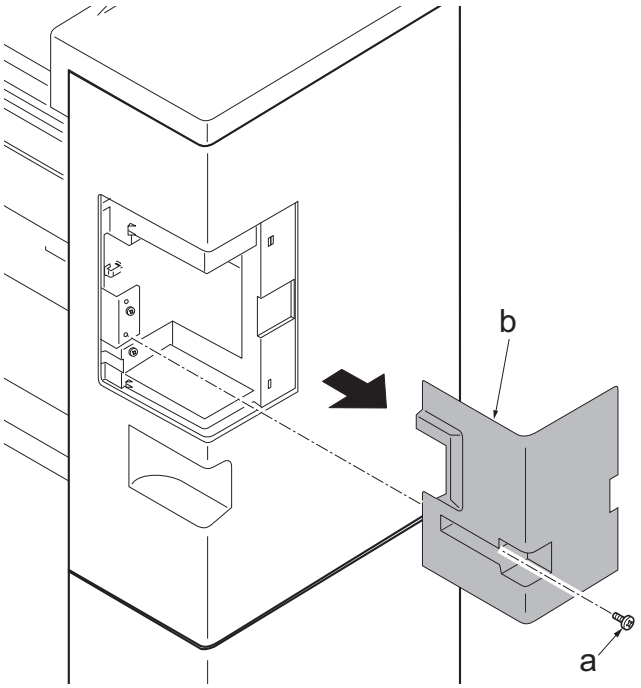

3 Remove three screws (a) .

4 Detach the DF rear cover (b).

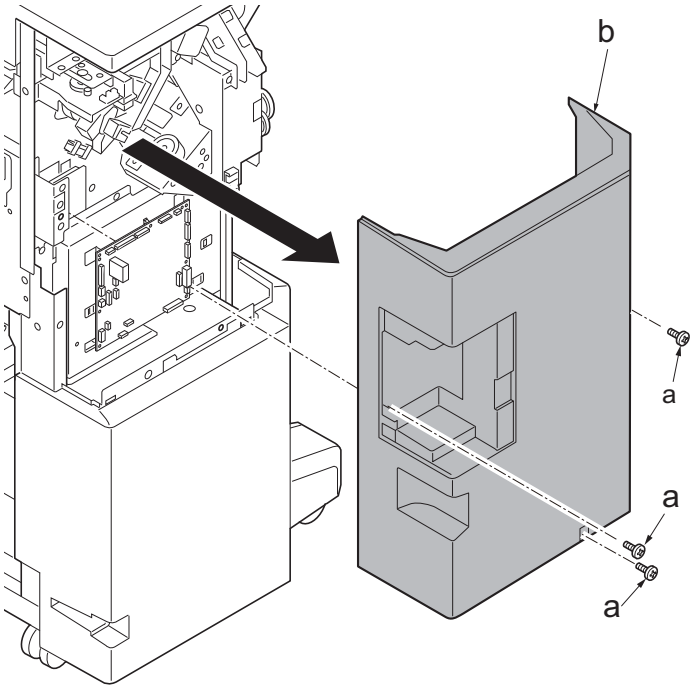

5 Disconnect all the connectors from the DF PWB (a).

6 Remove six screws (b) and remove the DF PWB (a).

7 Check or replace the DF PWB (a), and then reattach the parts in the original position.

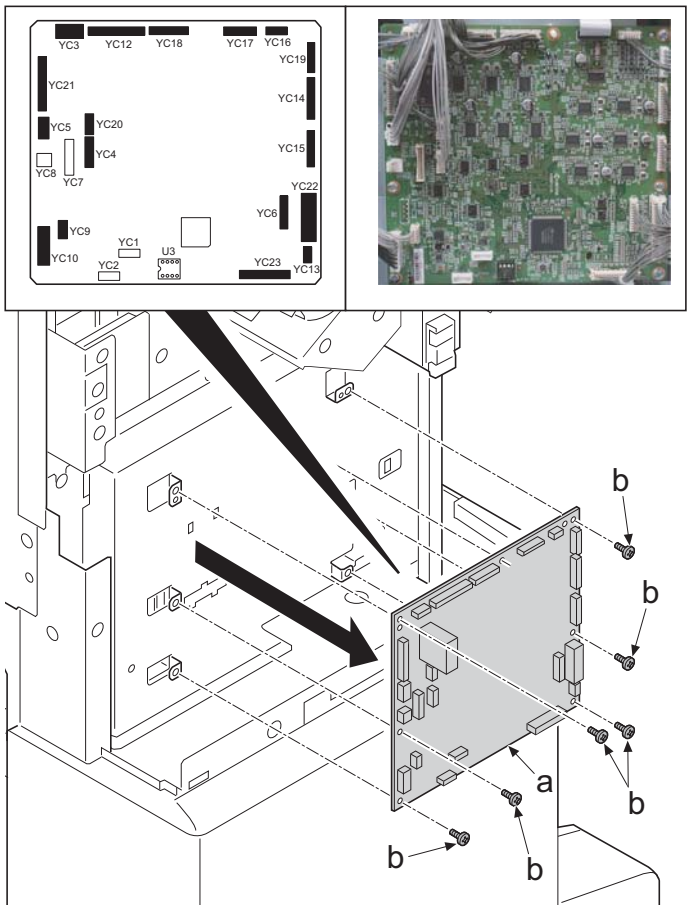

Notes for DF PWB replacement

- When replacing the DF PWB, make sure to remove the EEPROM from the old board and install it in the new board.
- Install the latest firmware after replacement.

(11)Booklet folding Unit (BF-730)

(11-1)Detaching and attaching the BF staple unit

1 Remove 4 screws (a) and remove the 2 brackets (b) in the direction of the arrow.

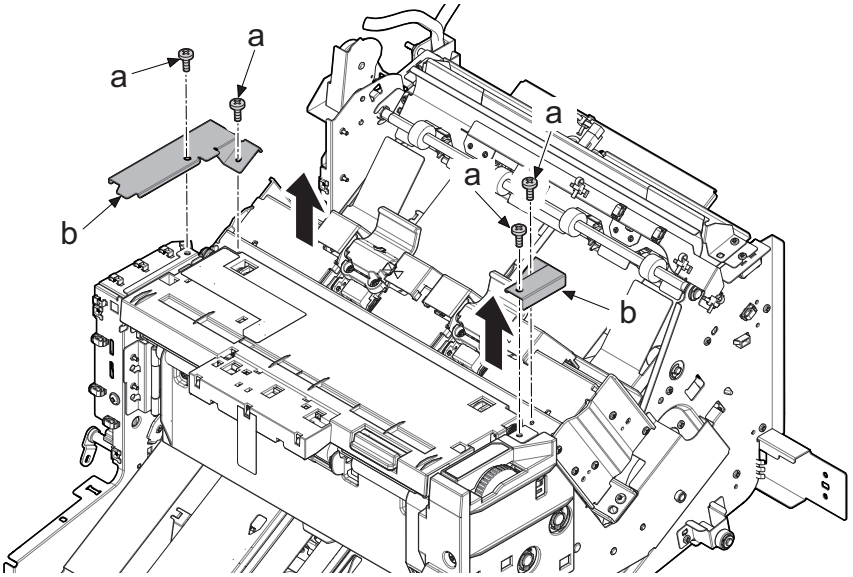

2 Remove 2 screws (a) and remove the BF staple unit (b) in the direction of the arrow.

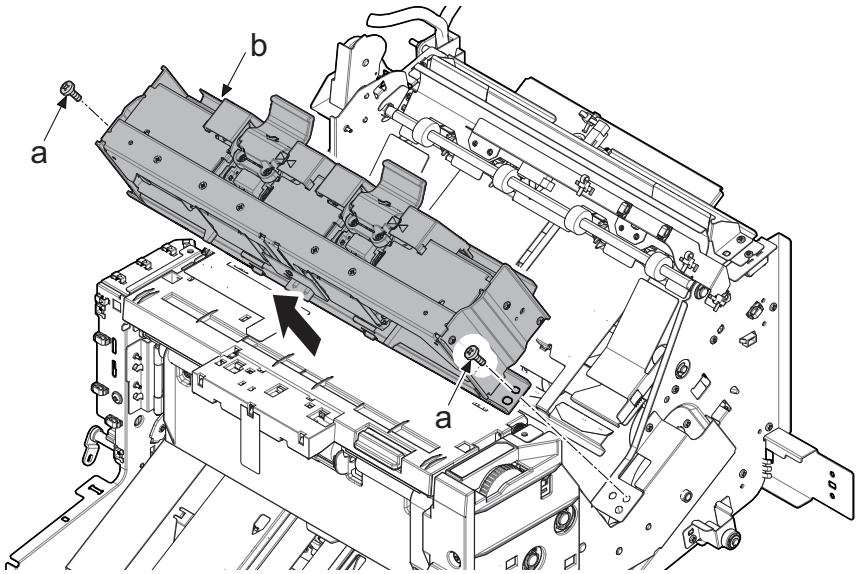

(11-2)Detaching and attaching the BF PWB

1 Raise the BF unit (a) upward.

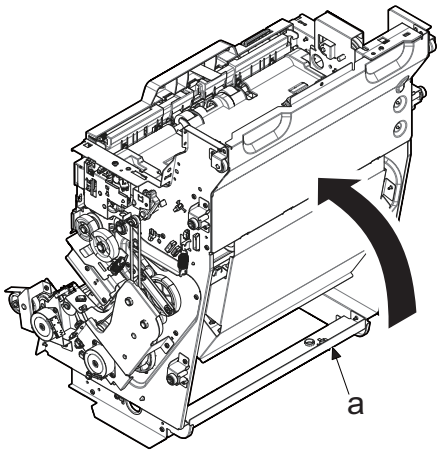

2 Remove 4 screws (a) and remove the PWB cover (b) in the direction of the arrow.

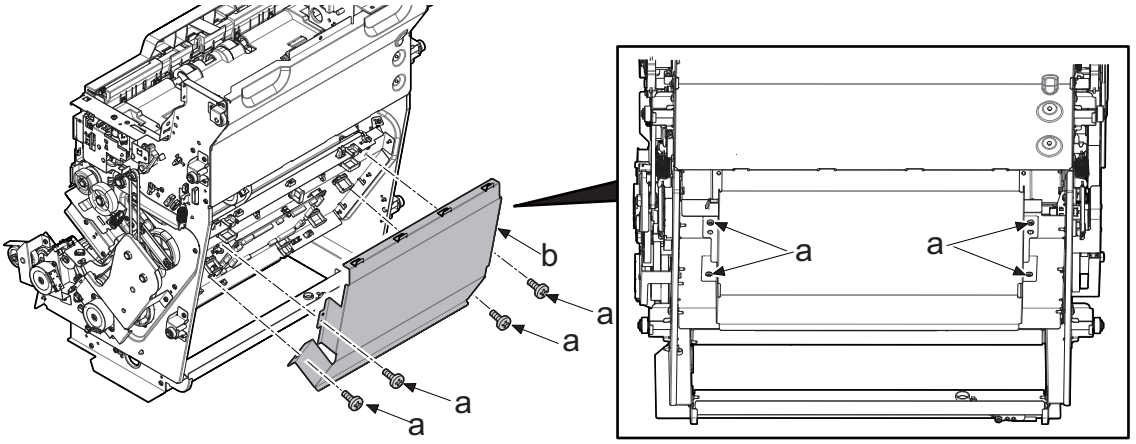

3 Disconnect all connectors.

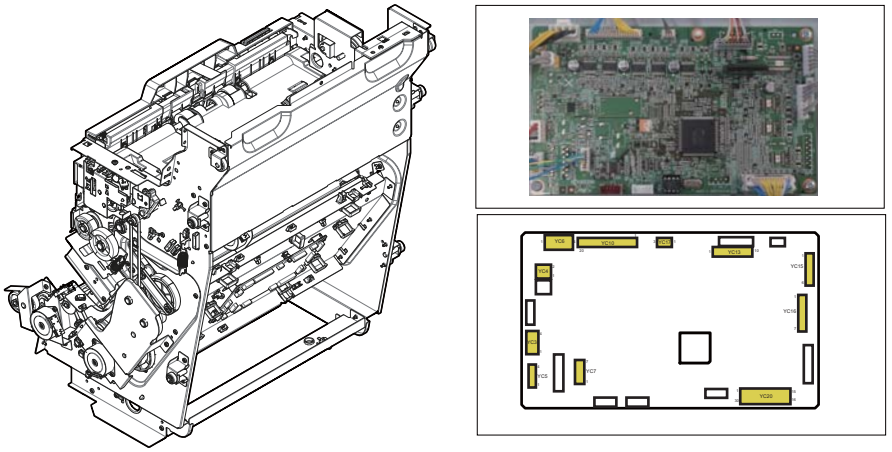

4 Remove four screws (a) .

5 Release lock for saddle (b) and take BF PWB away.

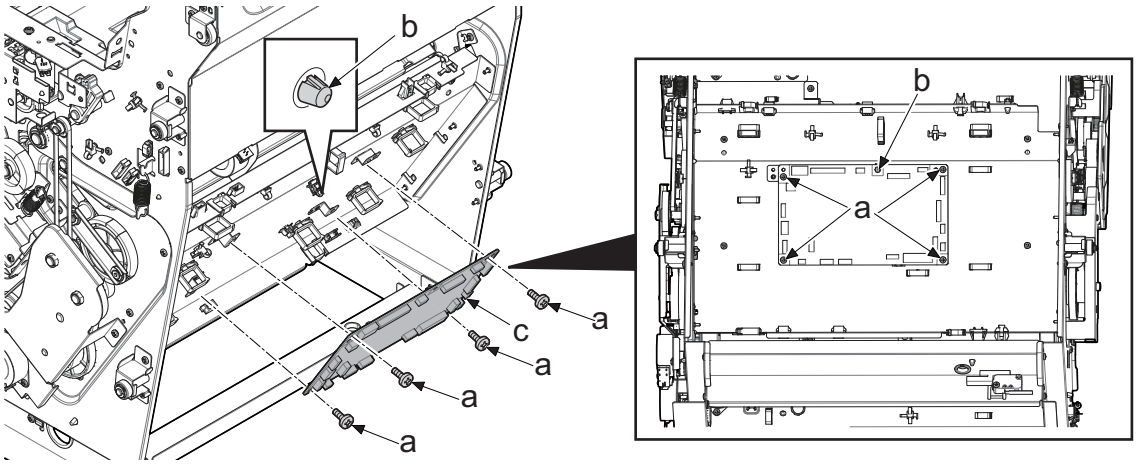

Notes for BF PWB replacement

- When replacing the BF PWB, make sure to remove the EEPROM from the old board and install it in the new board.
- Install the latest firmware after replacement.

(12)100 sheet staple finisher (DF-7150)

(12-1)Separation of enhancement units

NOTE

In case of maintenance for enhancement, separate them if necessary.

See Installation guide for the detail of separation.

(12-2)Detaching and attaching the front cover

Top cover/Upper inner cover/Upper rear cover/Lower rear cover

1 Open upper front cover (a).

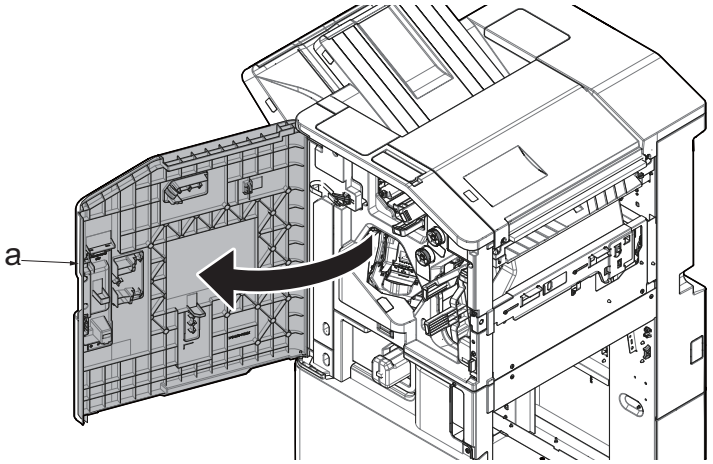

2 Remove top cover front lid (a) and rear lid (b) with flat screwdriver (c).

3 Remove four screws (d).

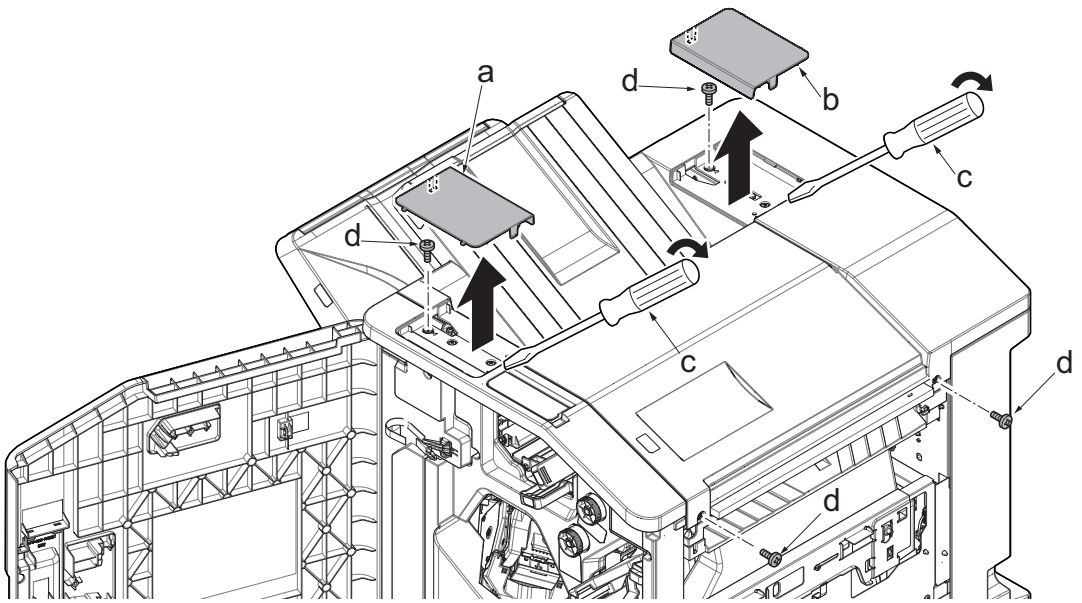

4 Remove 4 screws (a) and then remove the upper inner cover (b).

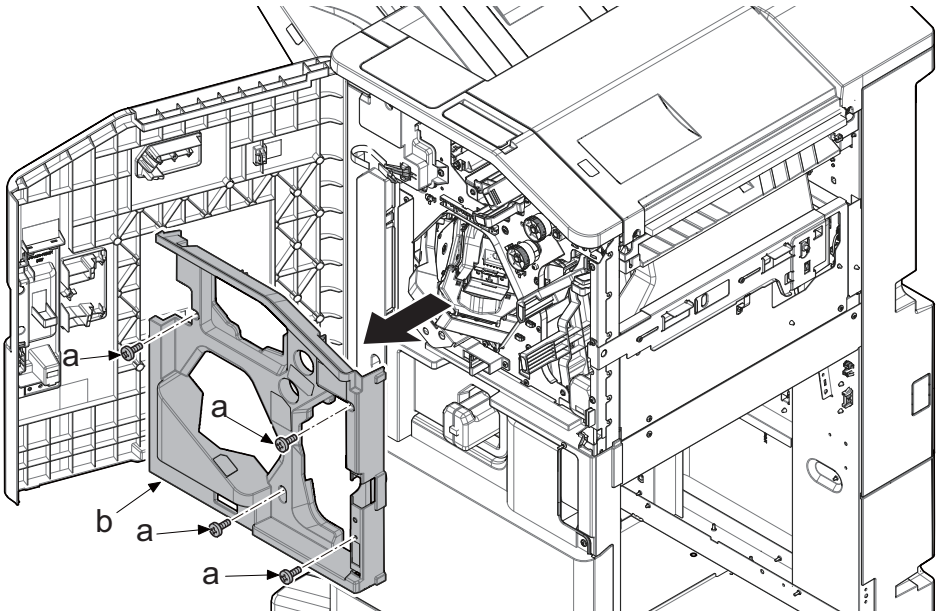

5 Remove connector (a) and wire form clamp (b).

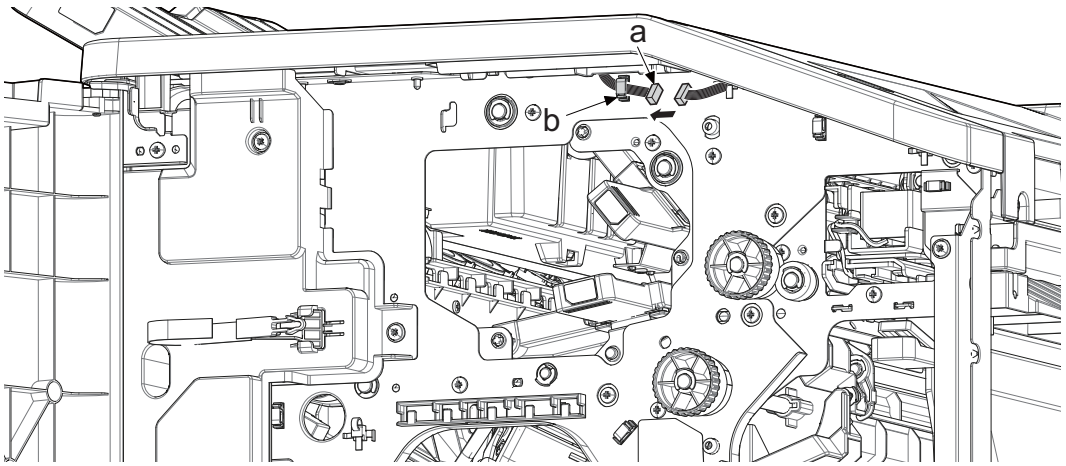

6 Detach the top cover (a) in the direction of the arrow.

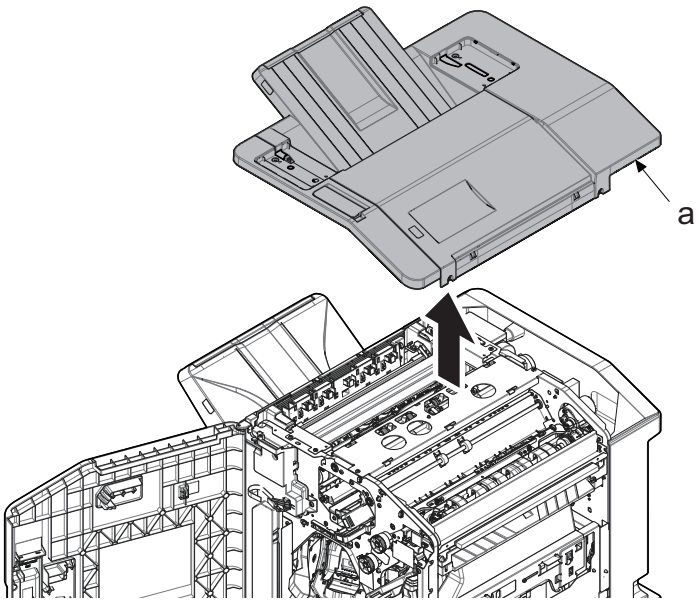

7 Remove three screws (a) and remove the upper rear cover (b) in the direction of the arrow.

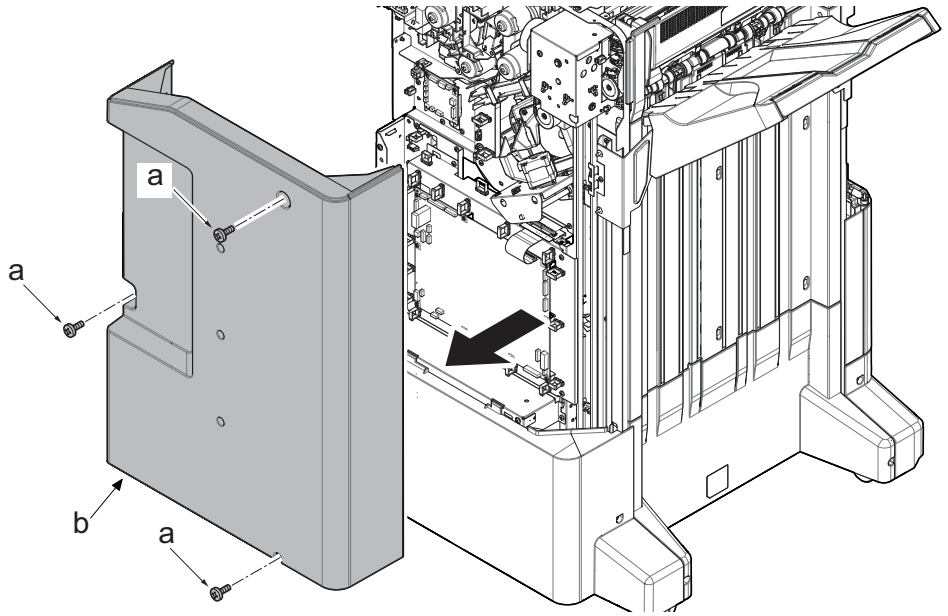

8 Remove two screws (a). Release two hooks (c), and then remove the lower rear cover (b) in the direction of the arrow.

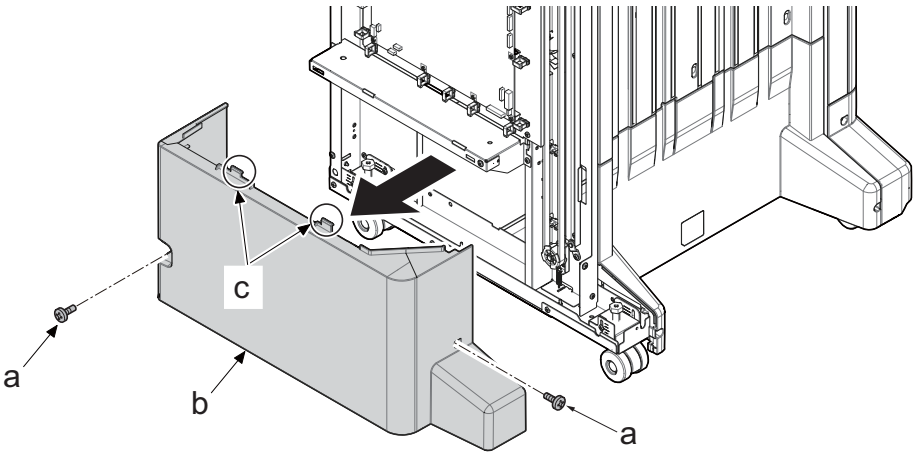

Upper front cover/Upper left cover/Middle front cover/Lower inner cover/Lower front cover/ Lower left cover

1 Open upper front cover (a).

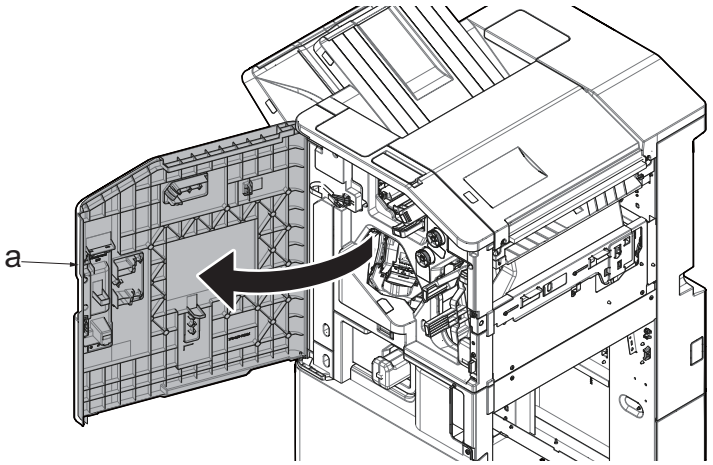

2 Remove top cover front lid (a) and rear lid (b) with flat screwdriver (c).

3 Remove four screws (d).

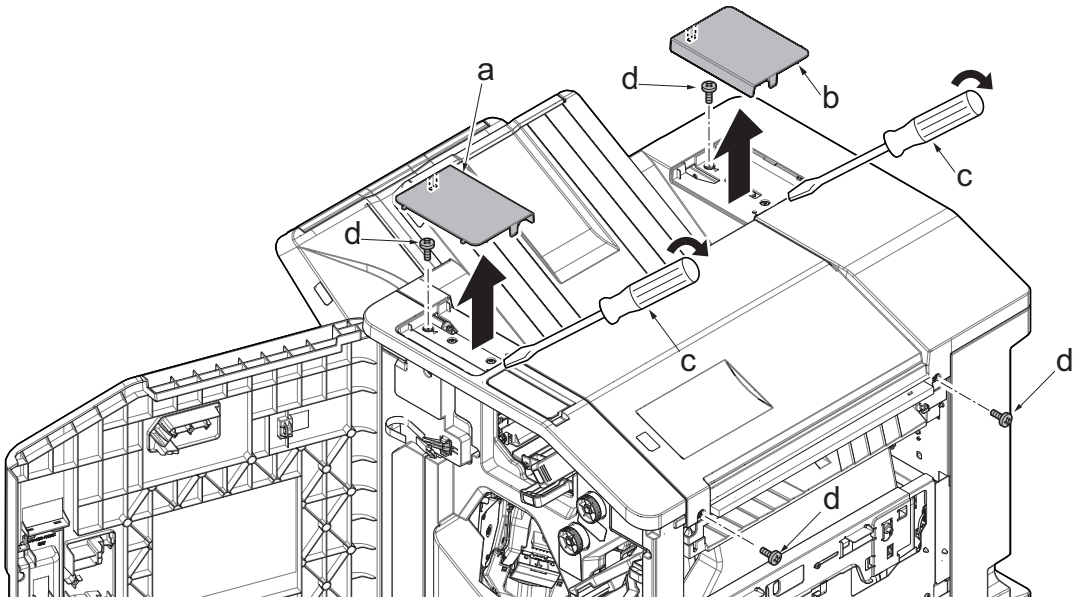

4 Remove 4 screws (a) and then remove the upper inner cover (b).

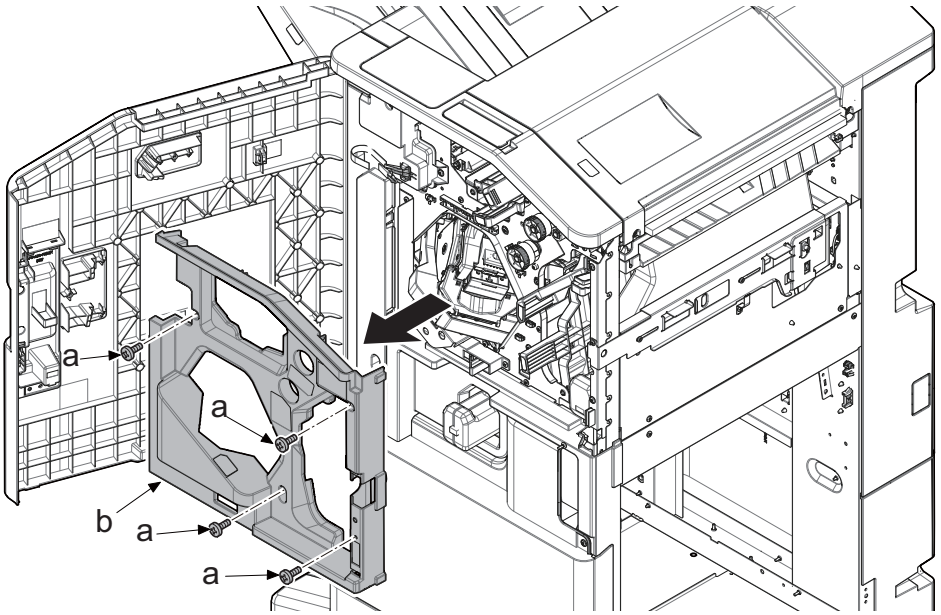

5 Remove connector (a) and wire form clamp (b).

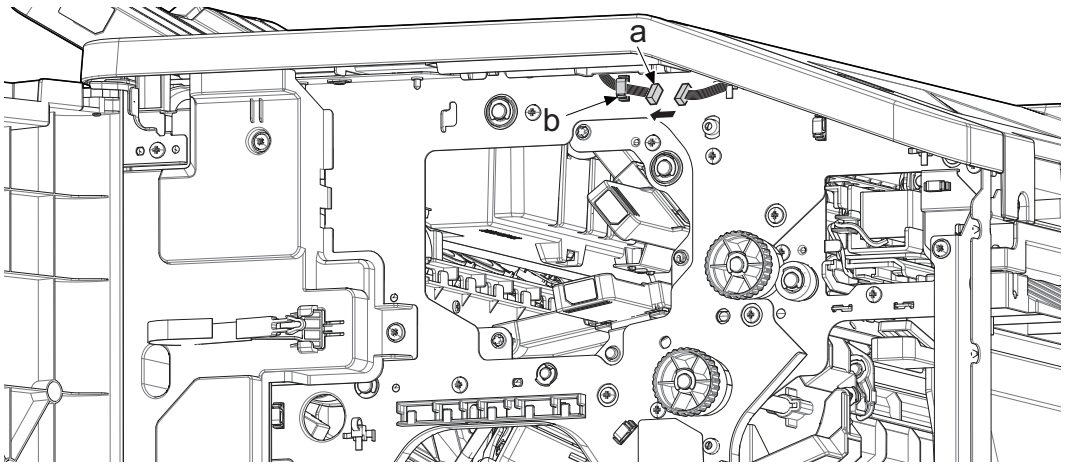

6 Detach the top cover (a) in the direction of the arrow.

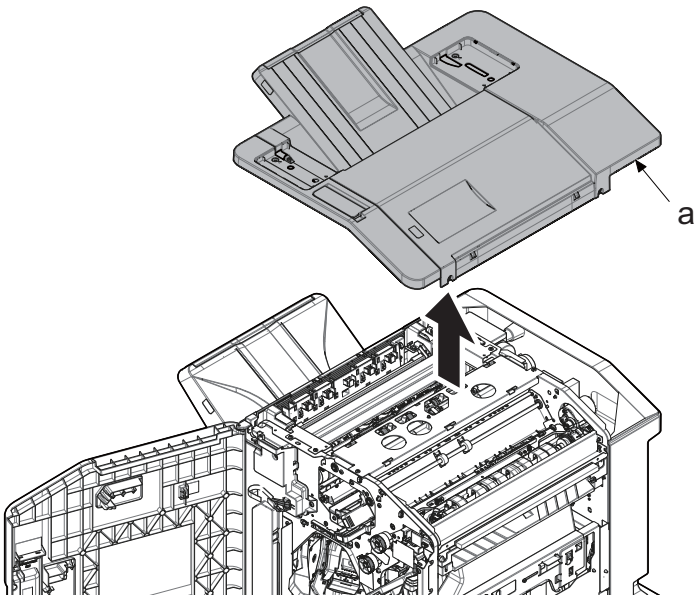

7 Remove the strap (c) in the direction of the arrow by pushing hook (a) with screwdriver (b).

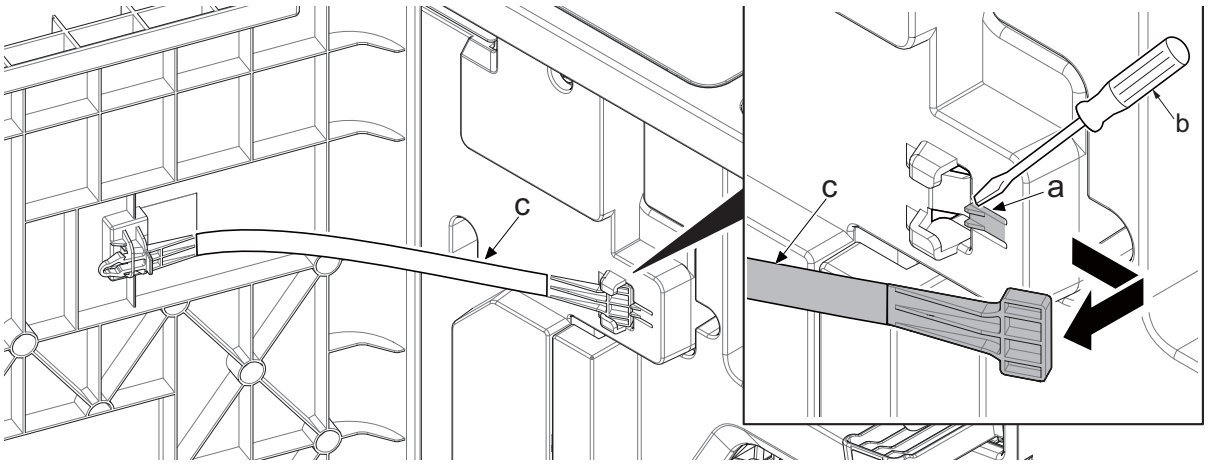

8 Remove three screws (a) and fulcrum shaft bracket (b) and upper front cover (c) in the direction of the arrow.

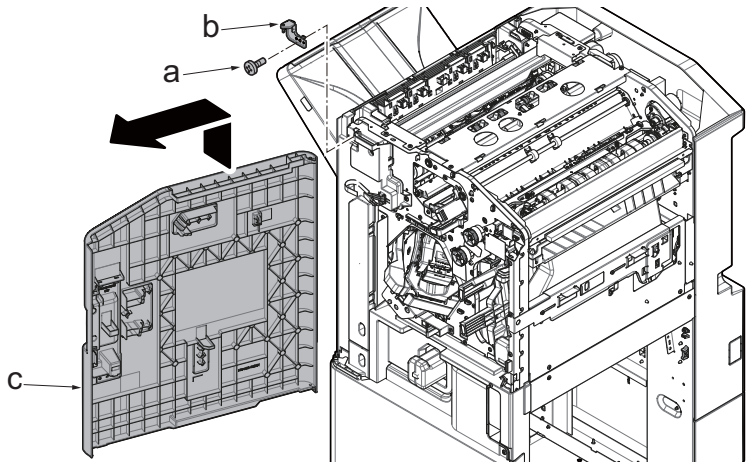

9 Remove three screws (a) and remove the upper left cover (b) in the direction of the arrow.

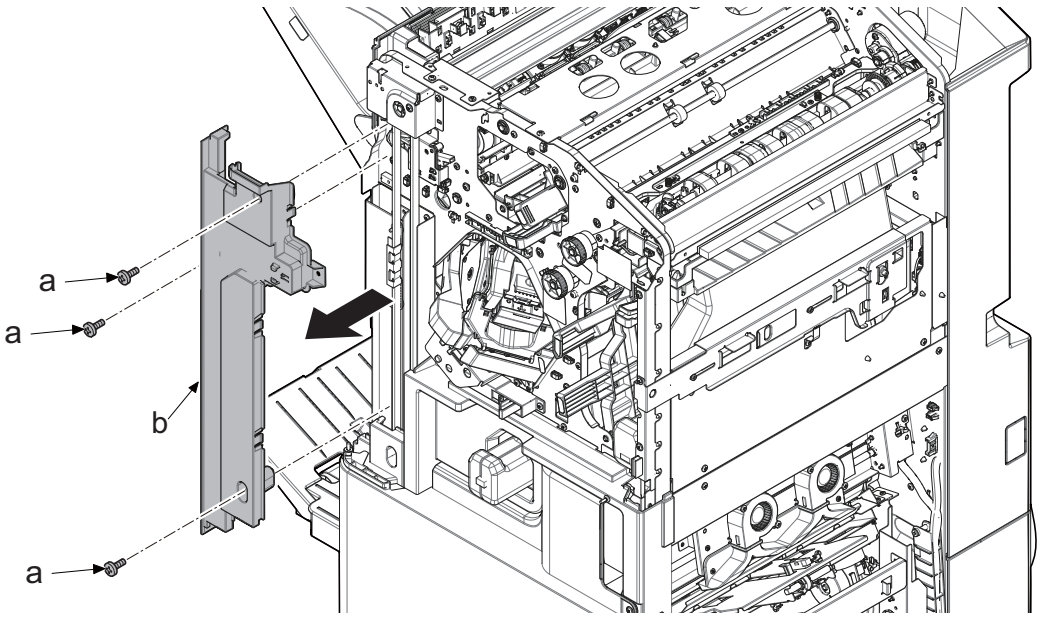

10 Remove screw (a) and remove the middle front cover (b) in the direction of the arrow.

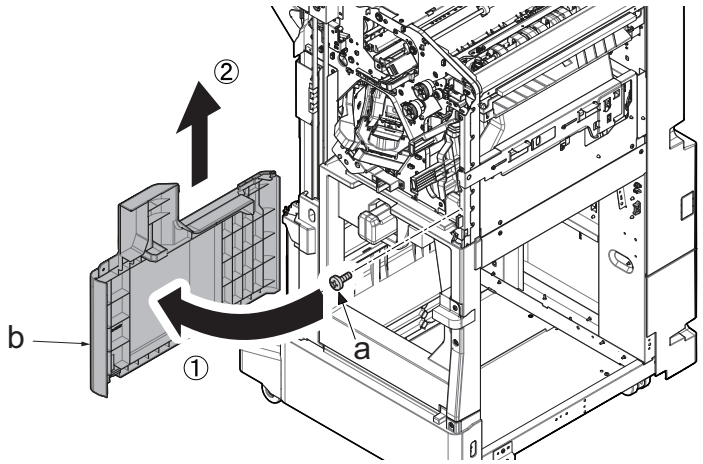

11 Remove 2 screws (a) and remove the lower front cover (b) in the direction of the arrow.

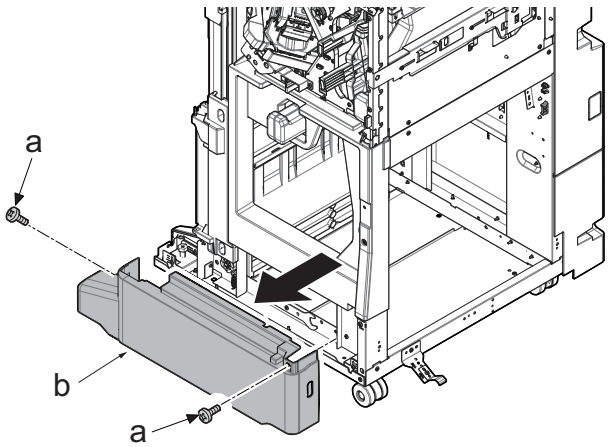

12 Remove 2 screws (a) and then remove the lower inner cover (b).

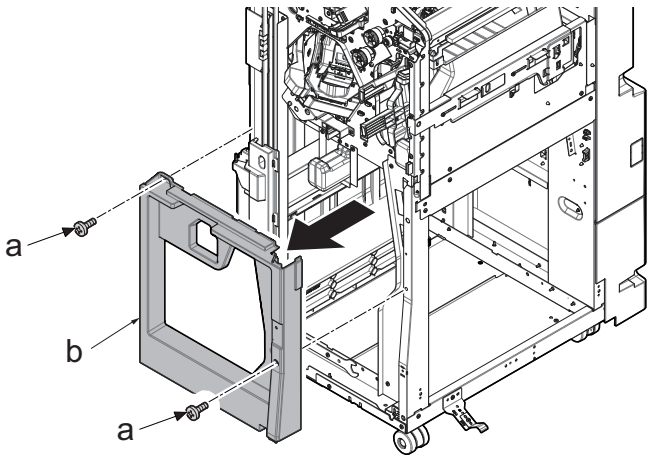

13 Remove 2 screws (a) and remove the lower left cover (b) in the direction of the arrow.

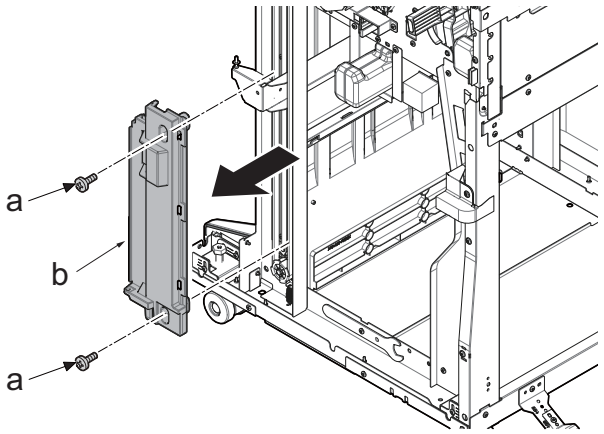

Detaching and reattaching the DF staple unit

IMPORTANT

- When installing BF, remove it in advance.
- If it is attached to the main unit, drive the DF tray motor with U240 and move tray A to the lowest position.

1 Open the front upper cover [A] of the DF-7150 and remove the strap [B].

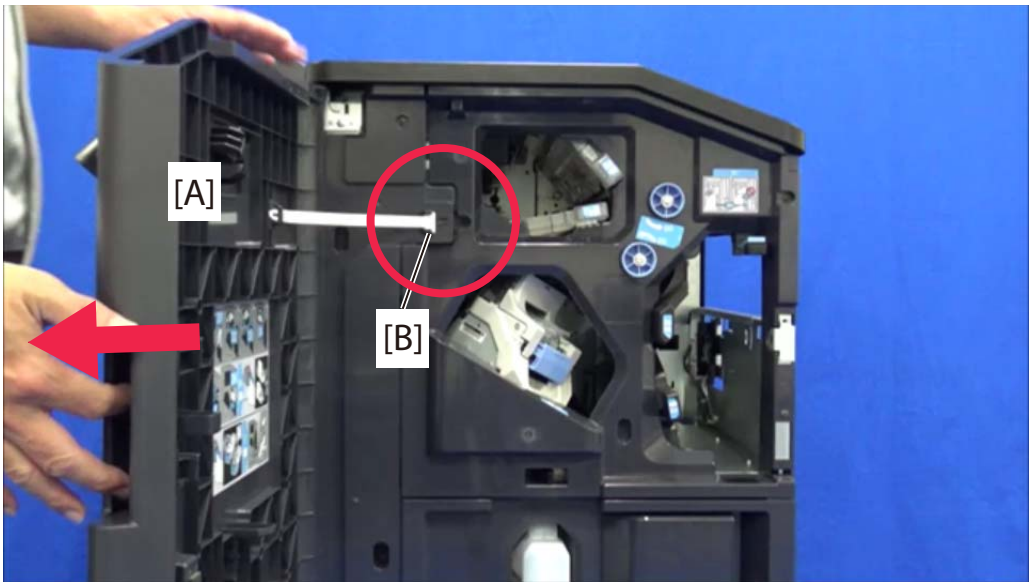

2 Remove the screw [A] of metal plate for the fulcrum shaft, and remove the front upper cover [B]. (Screw x1)



3 Remove the stopper and remove the JAM release handles [A] and [B].

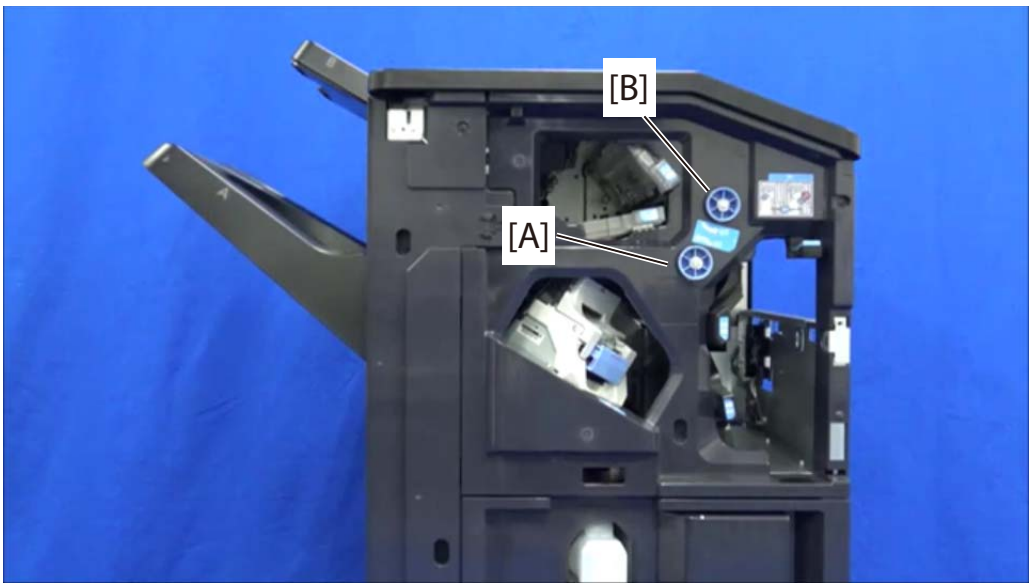

4 Remove the screw [A] and remove the upper inner cover [B]. (Screw x4)

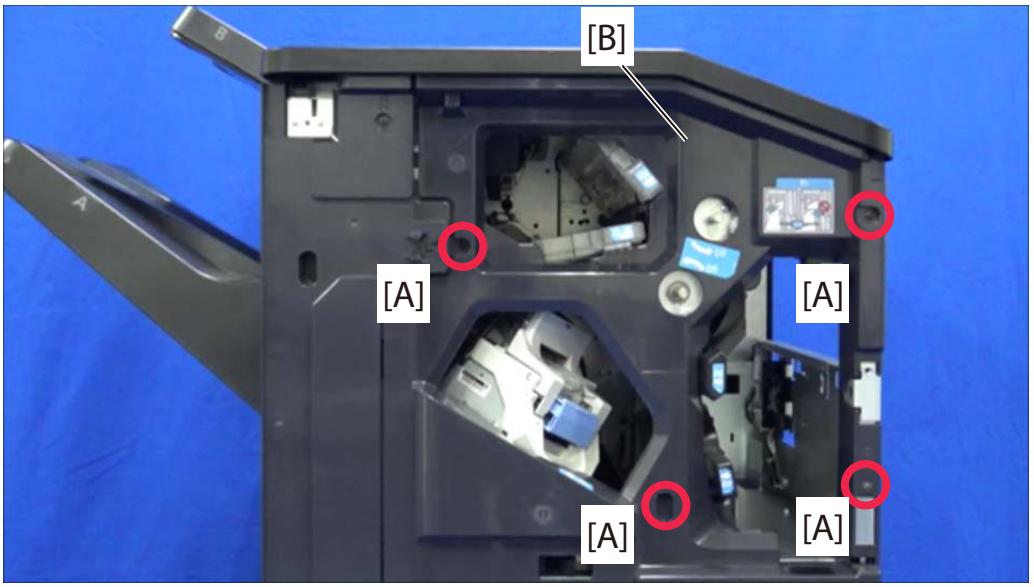

5 Remove the screw "A" and remove the left inner cover [B]. (Screw x3)

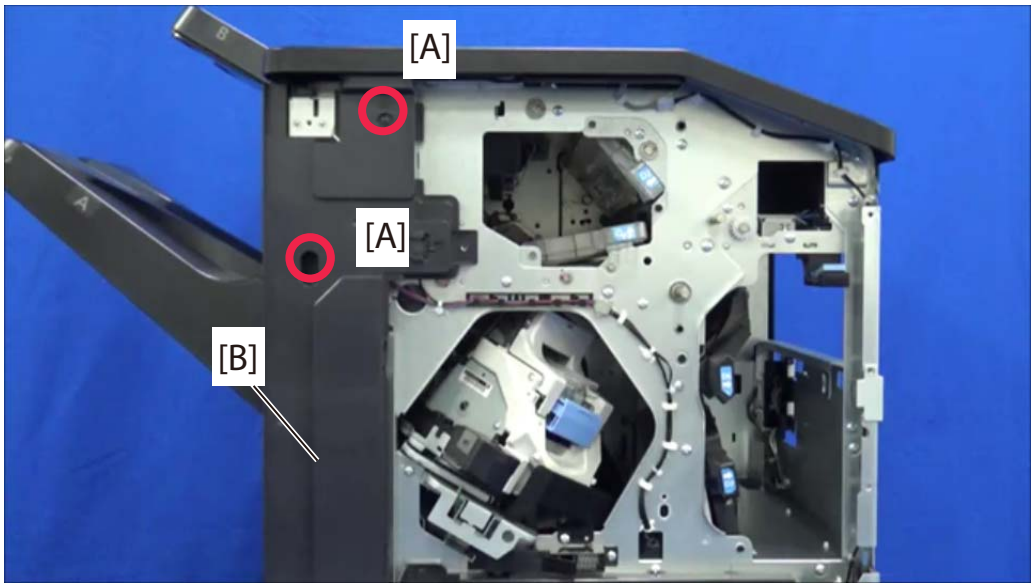

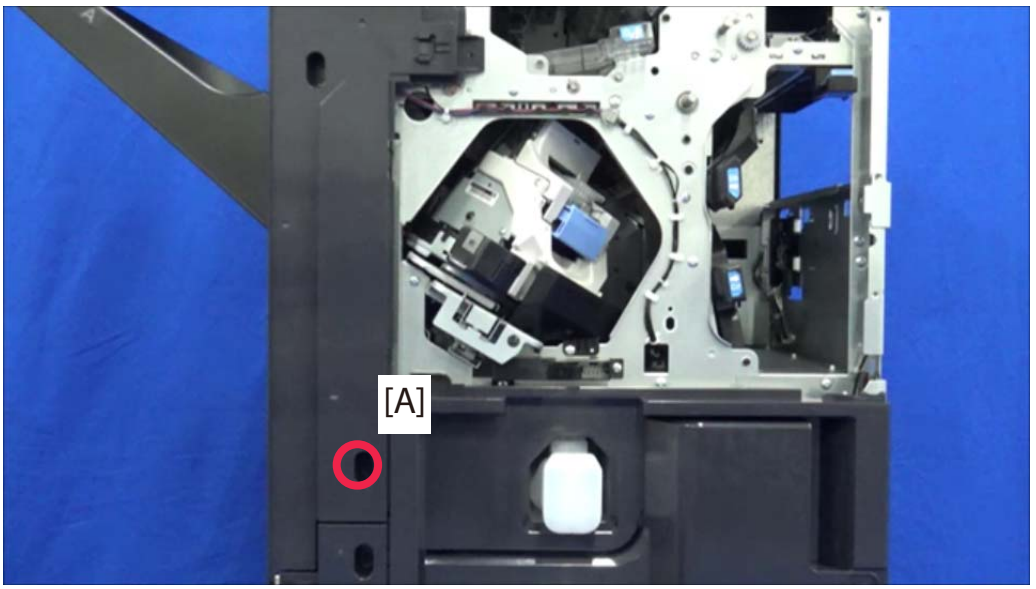

6 Pull out tray A [A], remove the screw [B], and remove tray A [A]. (Screw x2)

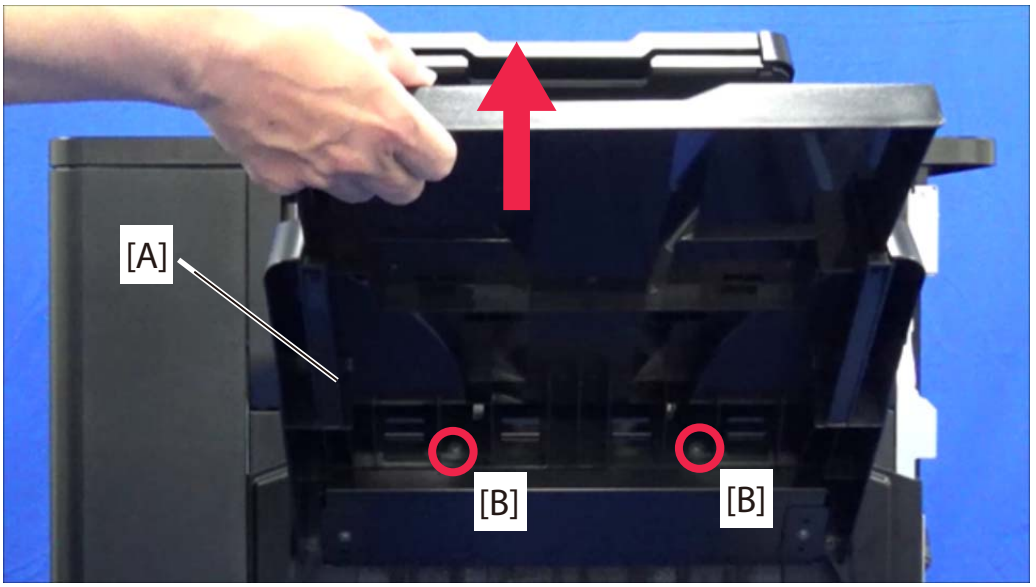

7 Remove the screw [A] and remove the rear upper cover [B]. (Screw x3)

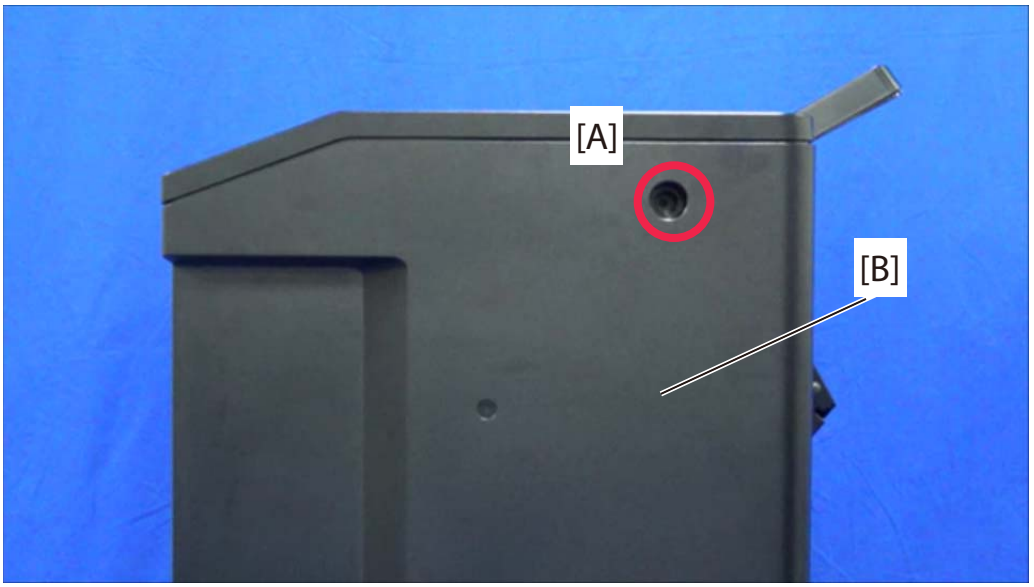

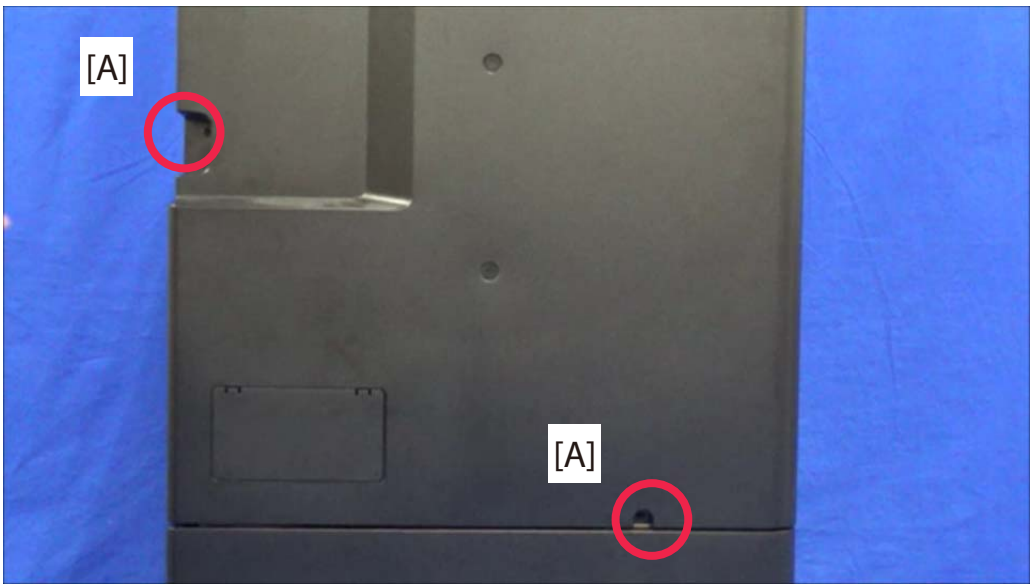

8 Rotate the DF tray motor [A] in the direction of the arrow (clockwise) to lower the tray [B}.

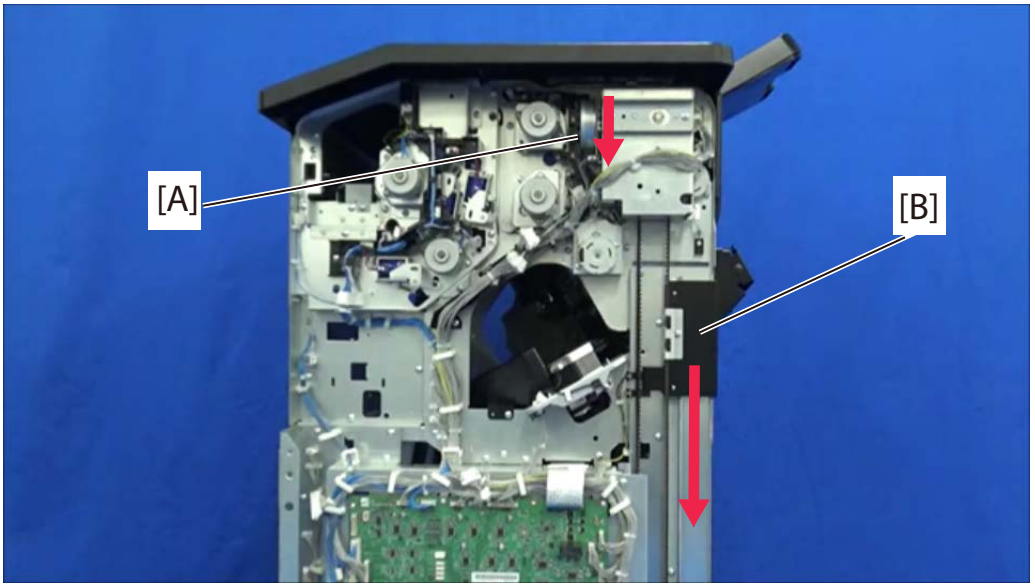

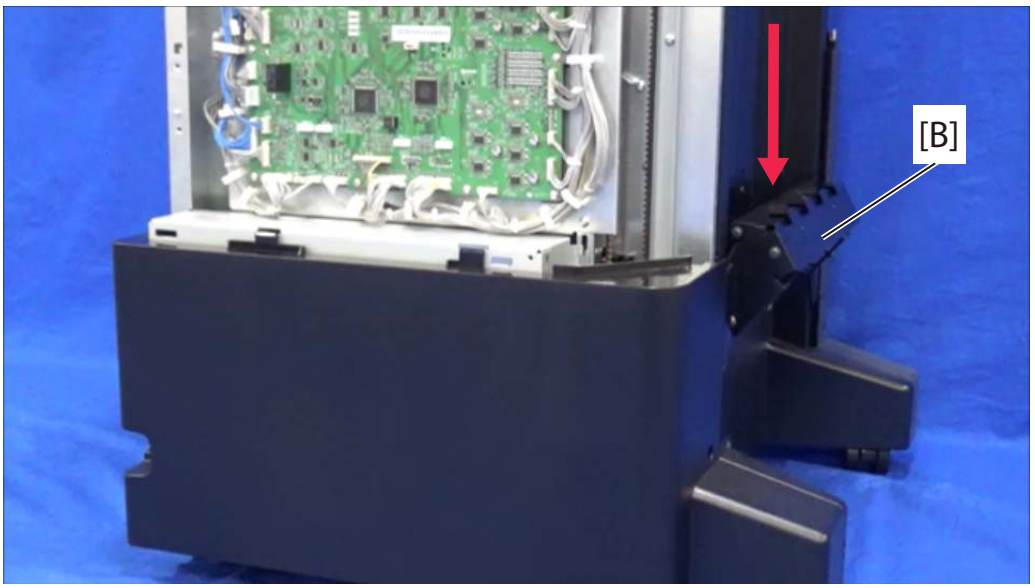

9 Remove the screw [A] and remove the partition cover [B]. (Screw x9)

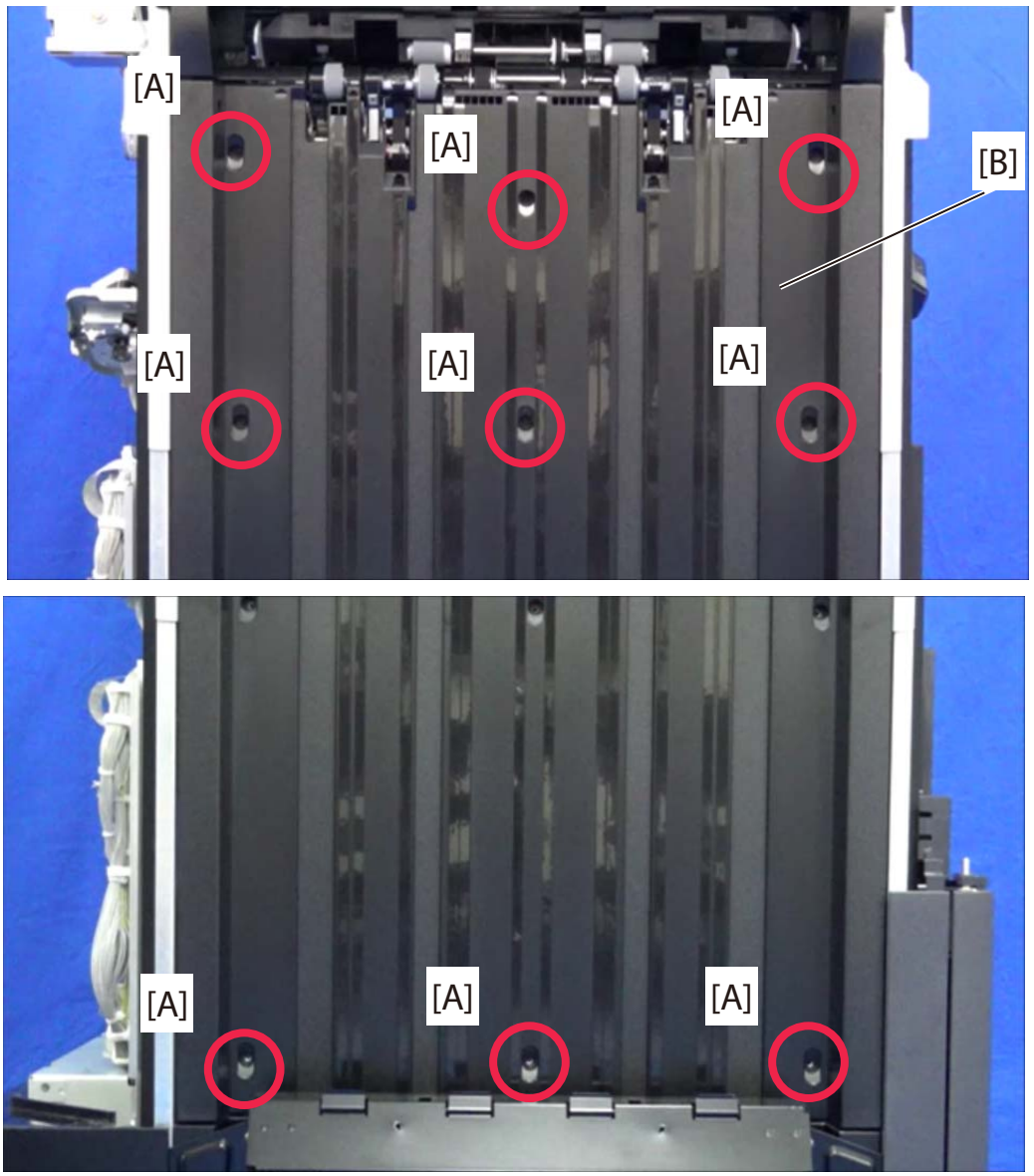

10 Remove the 5 connectors [A] of the exit unit.

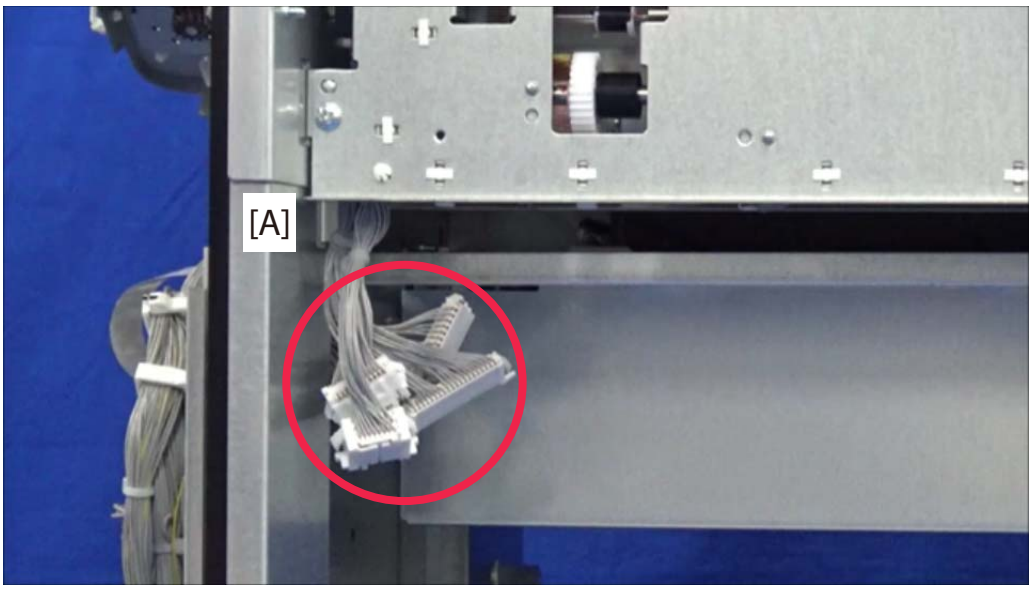

11 Remove the screw [B] of the exit unit [A]. (Screw x4)

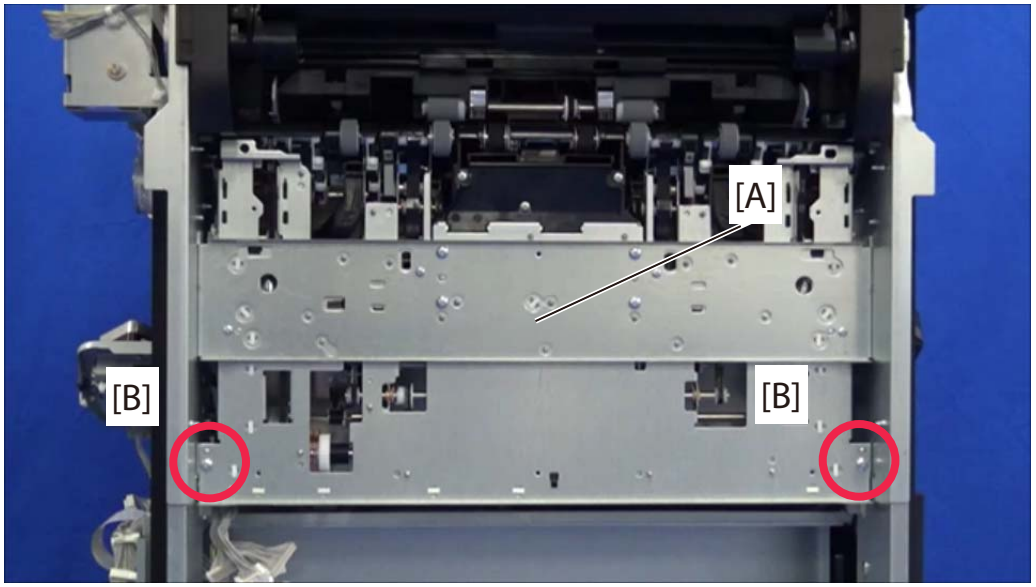

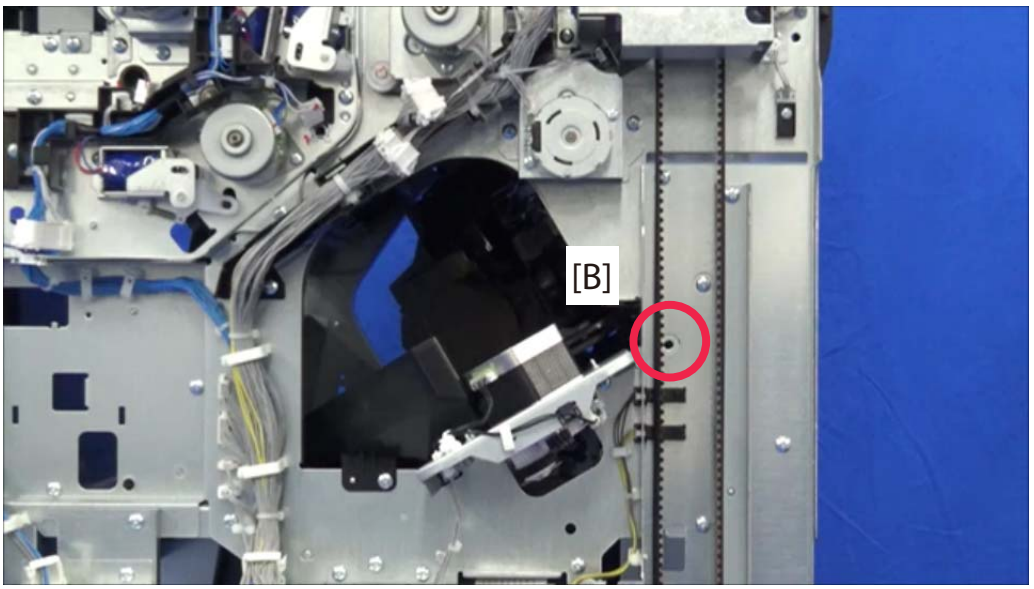

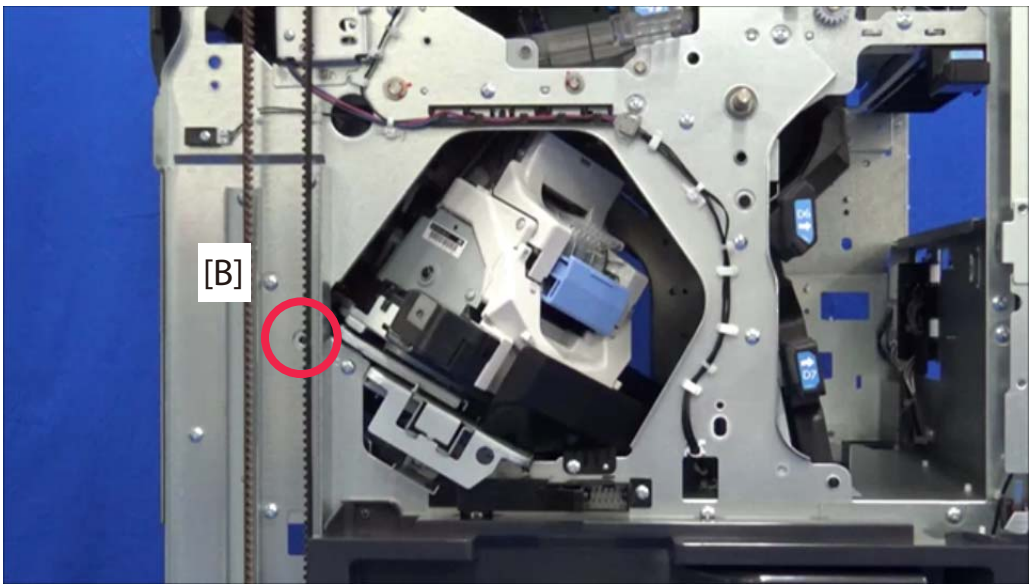

12 Raise the exit pulley [A] and lift the exit unit [B] to remove it.

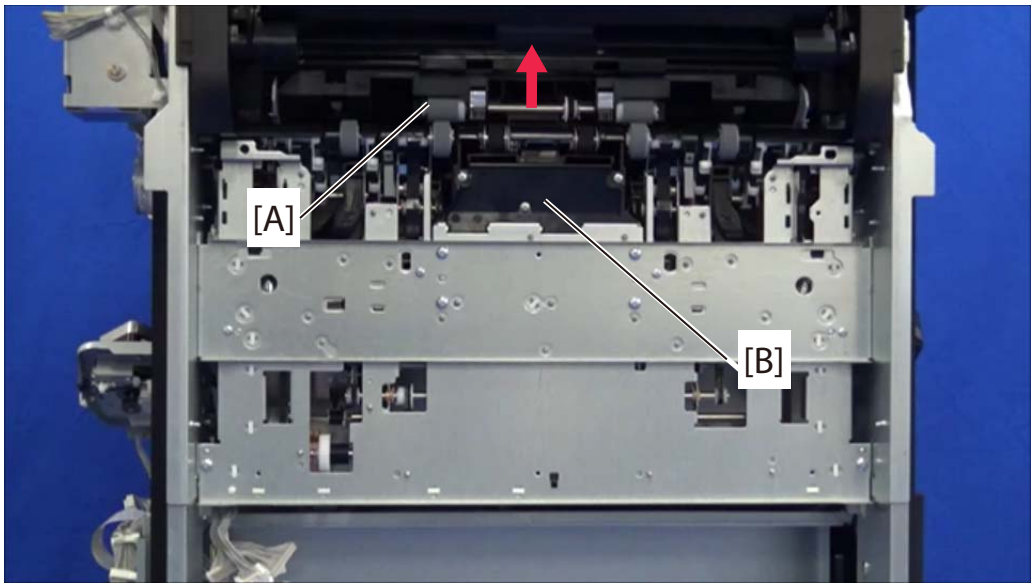

IMPORTANT

When removing the discharge unit, avoid the front and rear stoppers [A] from interfering with the guide holder [B].

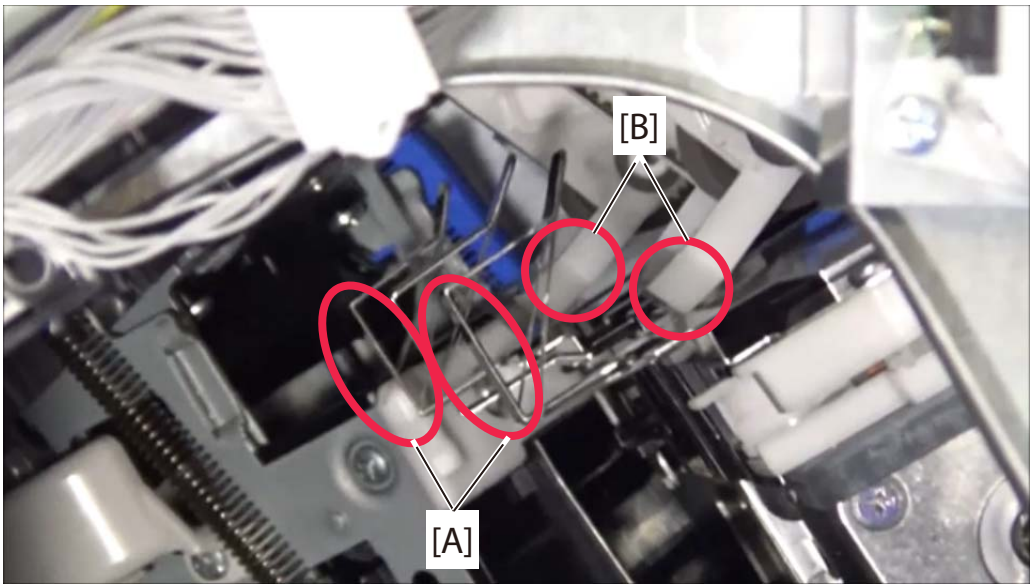

13 Remove the screw [A] and remove the duct A [B]. (Screw x1)

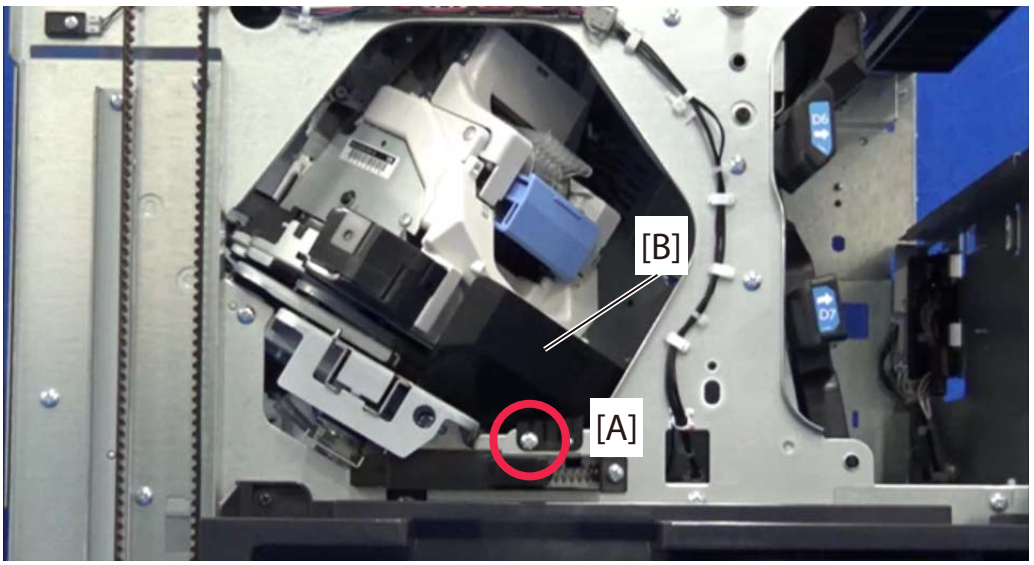

14 Open the wire cover [B] of the staple unit [A], remove the two connectors [C].

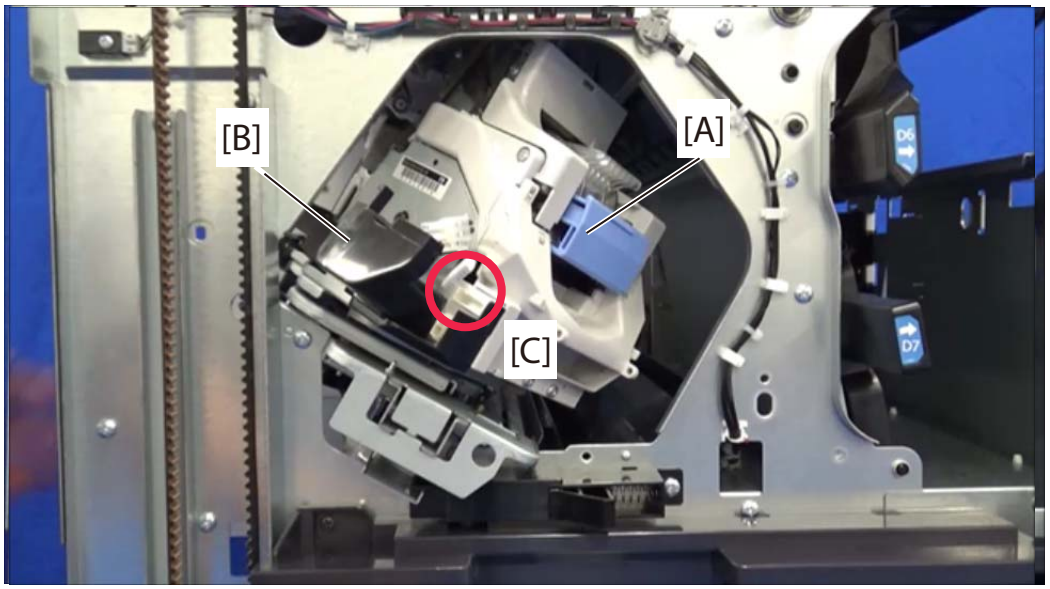

15 Release the wire saddle [A] and remove the fixing screw [C] of the staple unit [B]. (Screw x1)

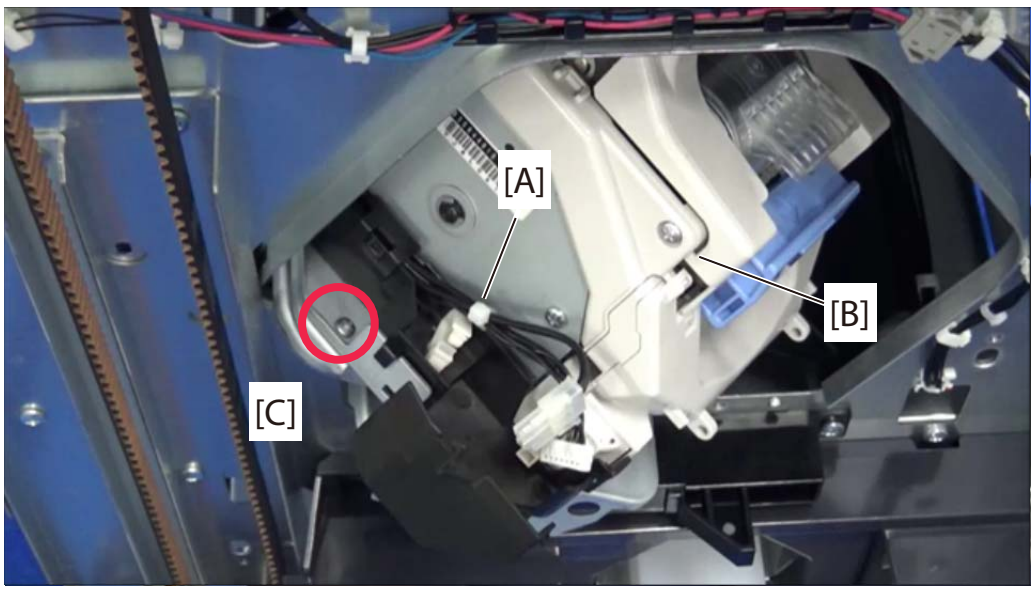

16 Release the stapler lock [A] and move the stapler unit [B] to the rear side.

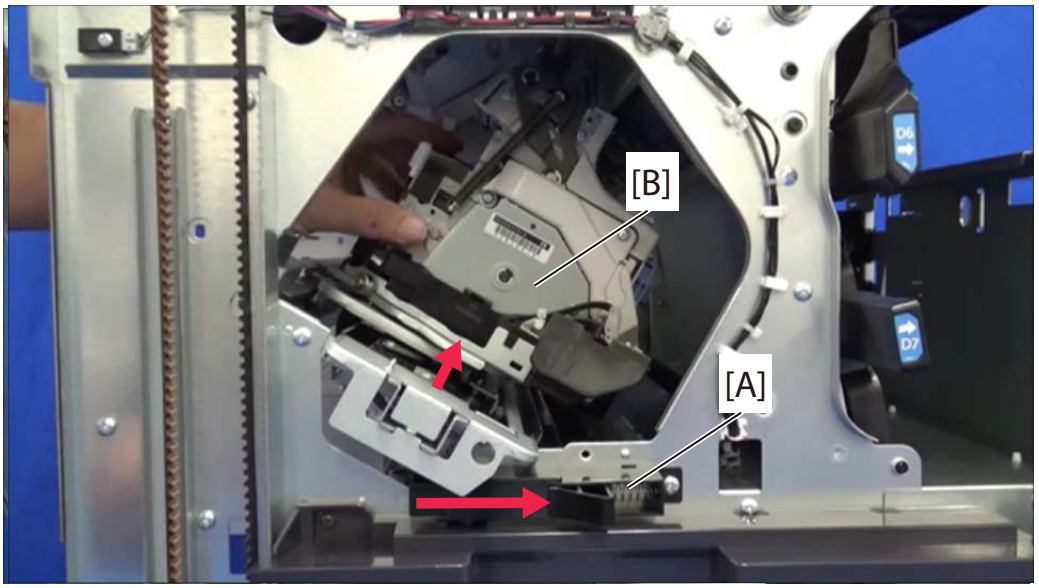

17 Release the wire [A].

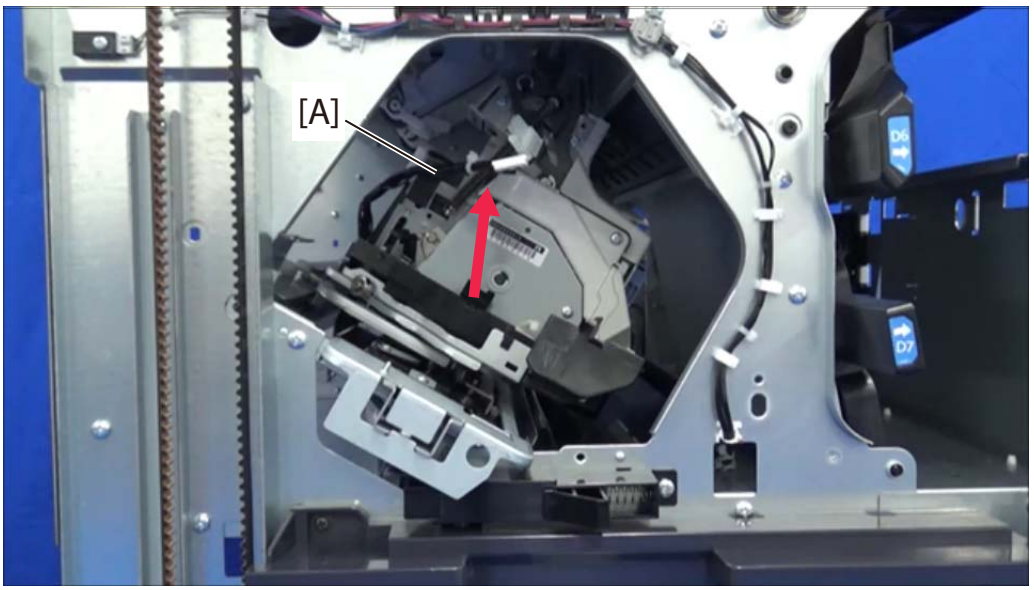

18 Move the staple unit [A] to the center and remove the wire [B].

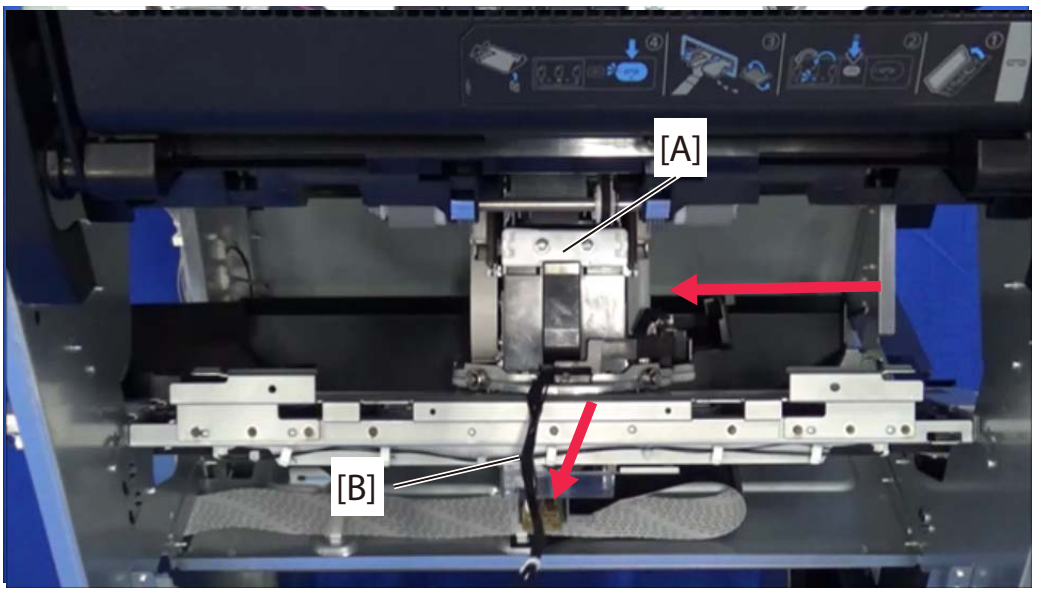

19 Lift and remove the staple unit [A].

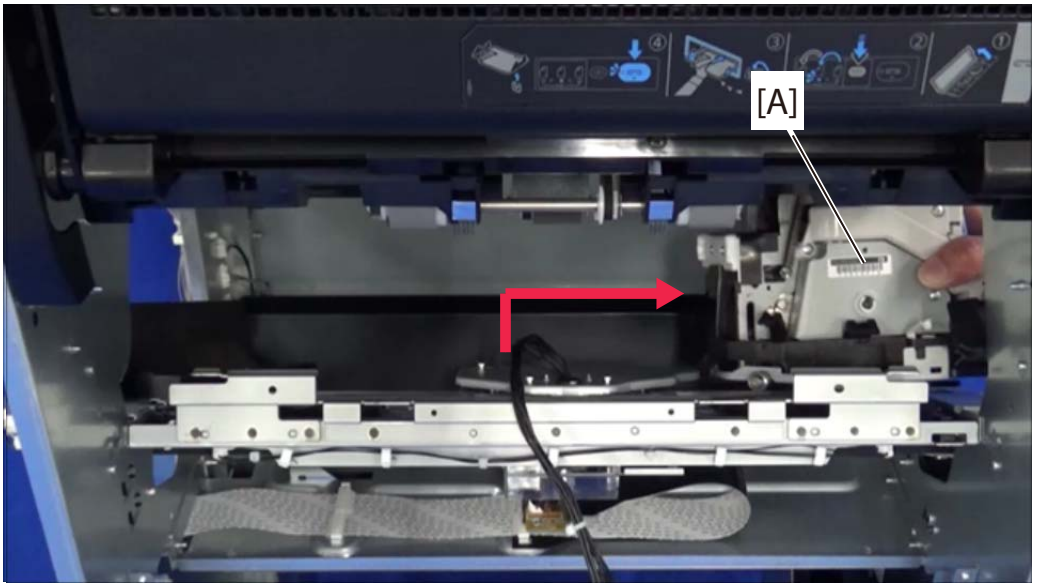

20 Remove the staple cartridge [A].

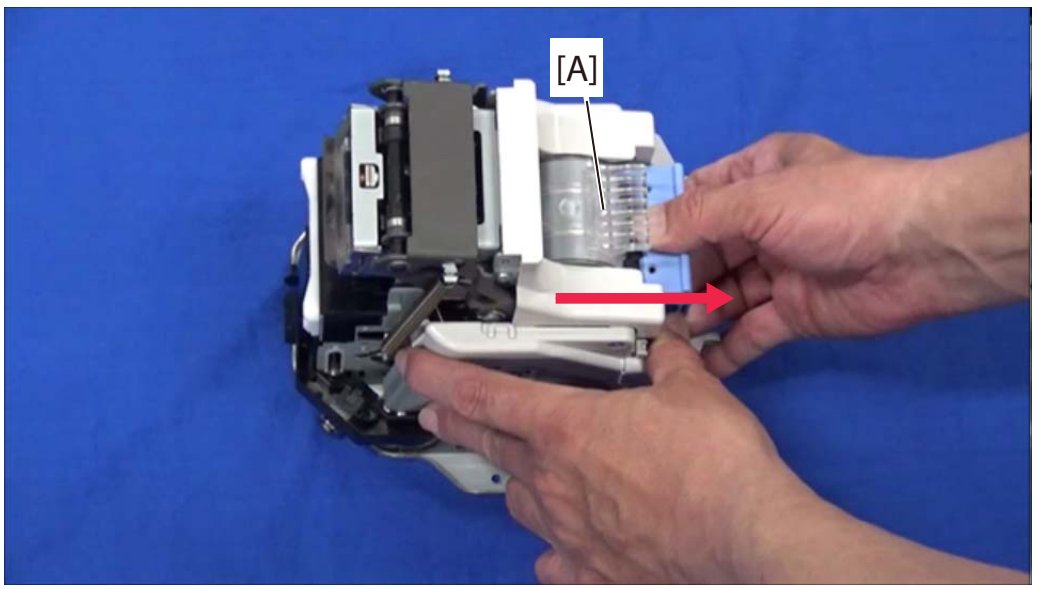

21 Turn over the staple unit [A], remove the screw [B], and remove the staple mount [C]. (Screw x4)

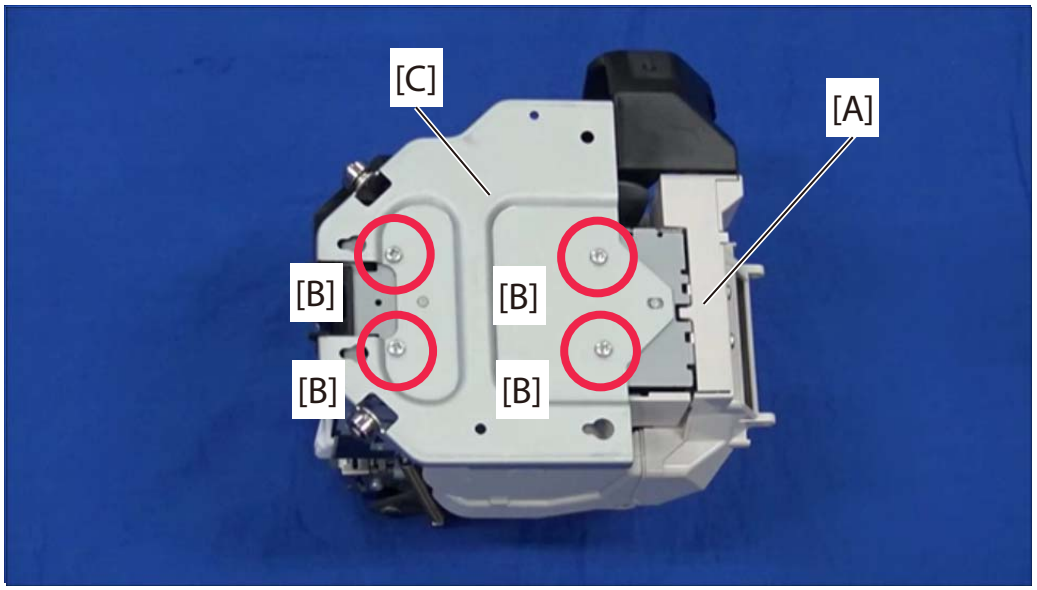

22 Remove the wire guide [A].

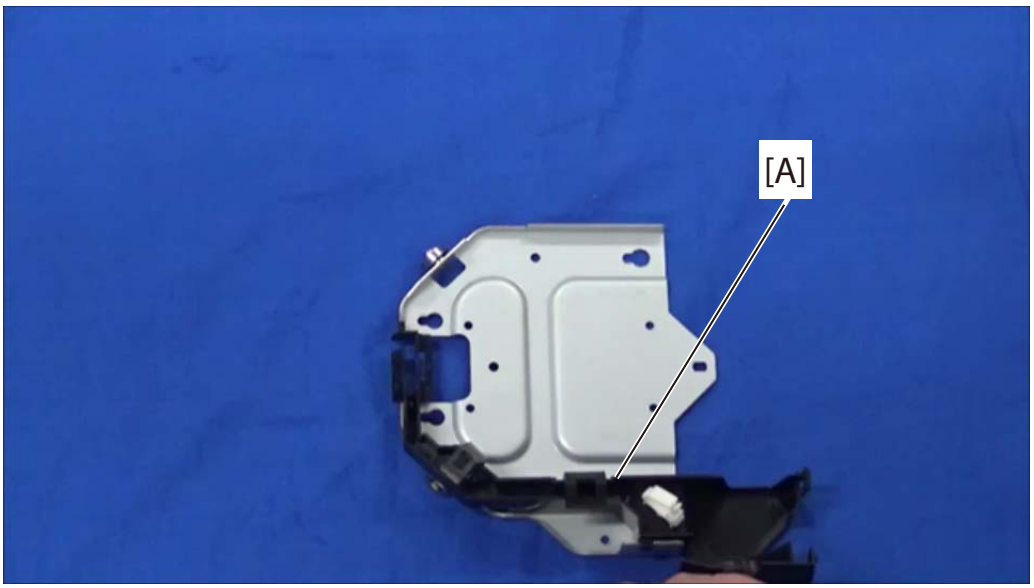

(12-3)Detaching and attaching the PWB

Main PWB

1 Remove three screws (a) (M4x10) and remove the upper rear cover (b) in the direction of the arrow.

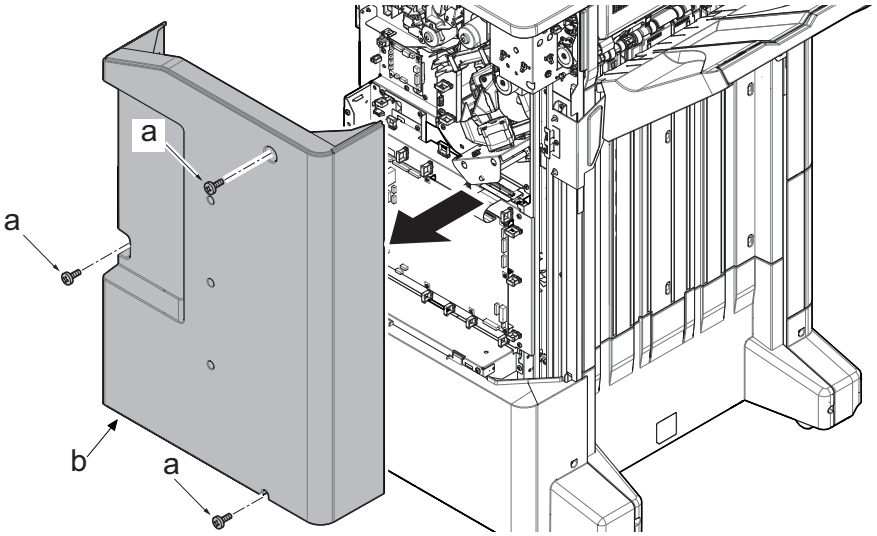

2 Disconnect all connector.

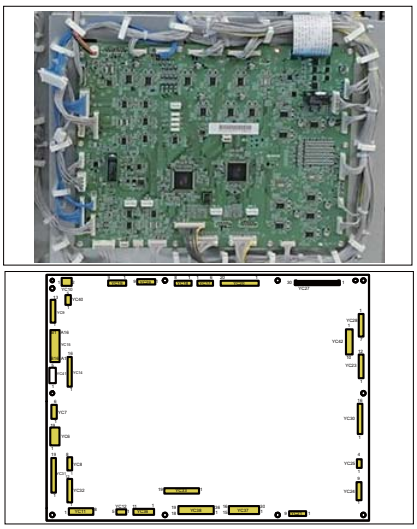

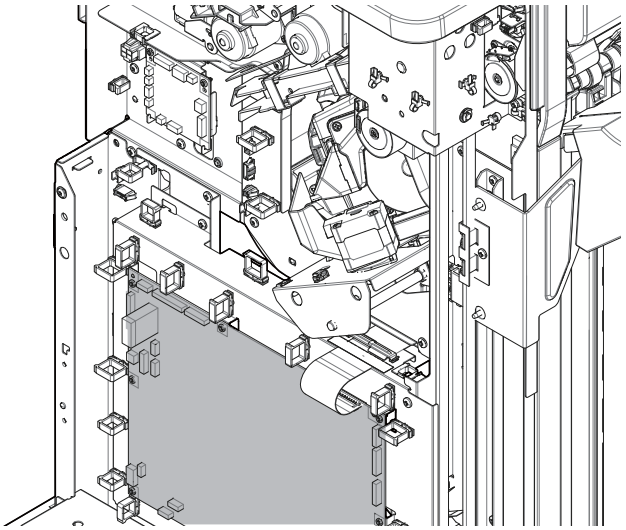

3 Remove four screws (b) and detach the DF main PWB (a).

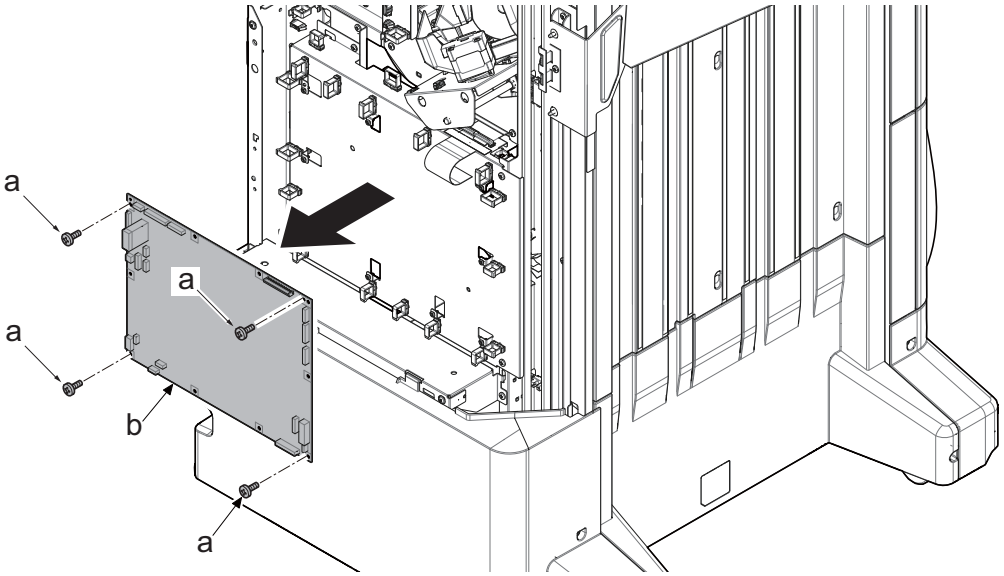

Notes for DF Main PWB replacement

- When replacing the DF Main PWB, make sure to remove the EEPROM from the old board and install it in the new board.
- Install the latest firmware after replacement.

(13)PH PWB (Punch unit)

1 Remove three screws (a) (M4x10) and remove the upper rear cover (b) in the direction of the arrow.

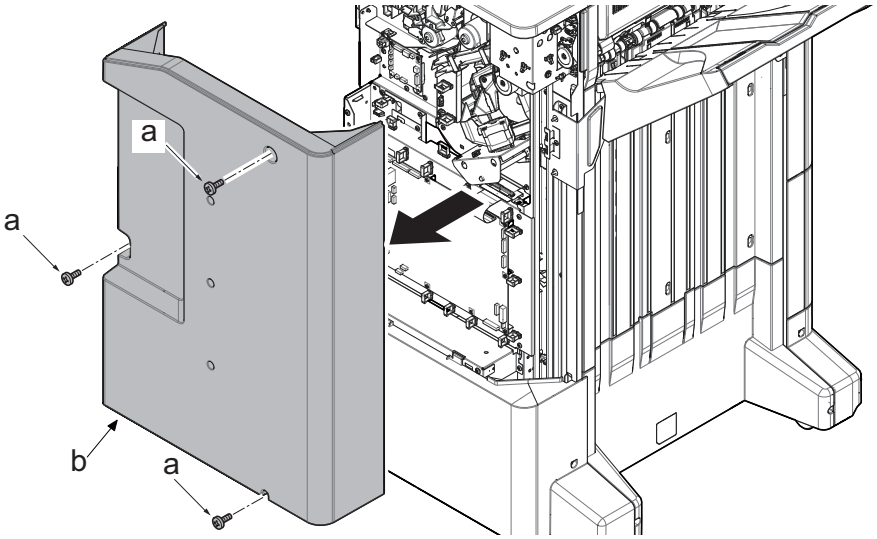

2 Disconnect all connector.

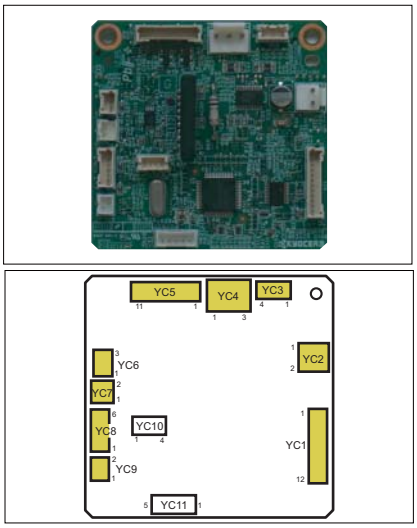

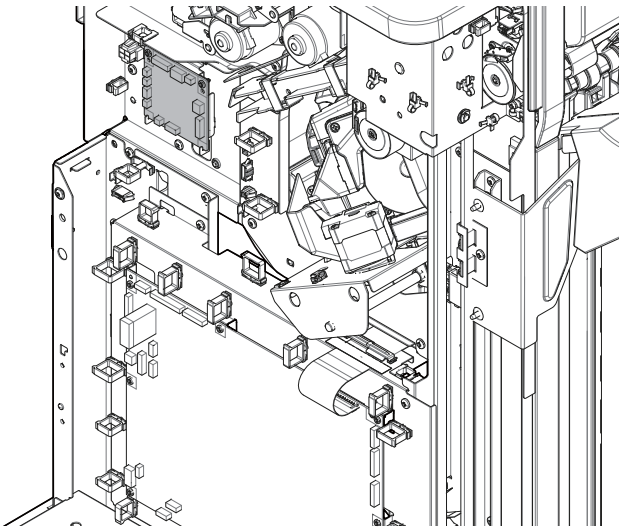

3 Remove two screws (b) and detach the PH PWB (a).

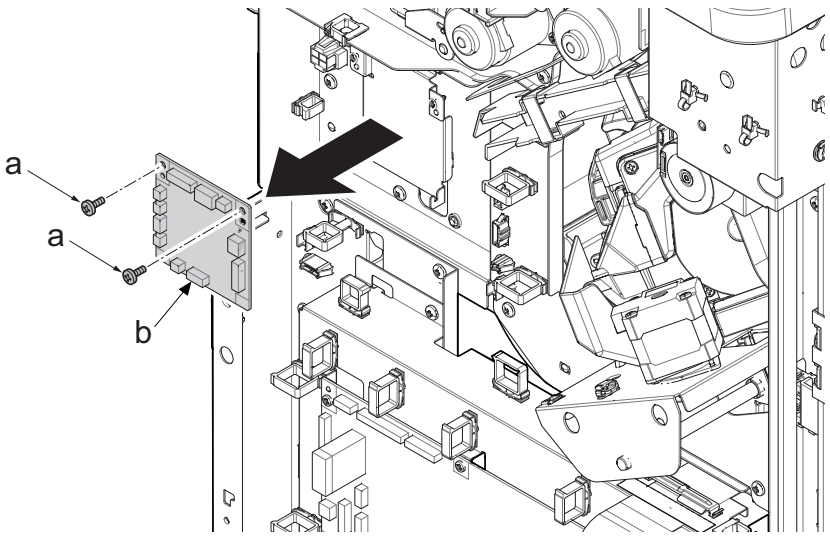

(14)Booklet Unit (BF-9100)

(14-1)Separate from DF and detach unit

1 Unlock with release lever and pull out BF-9100 (a) from DF-7150.

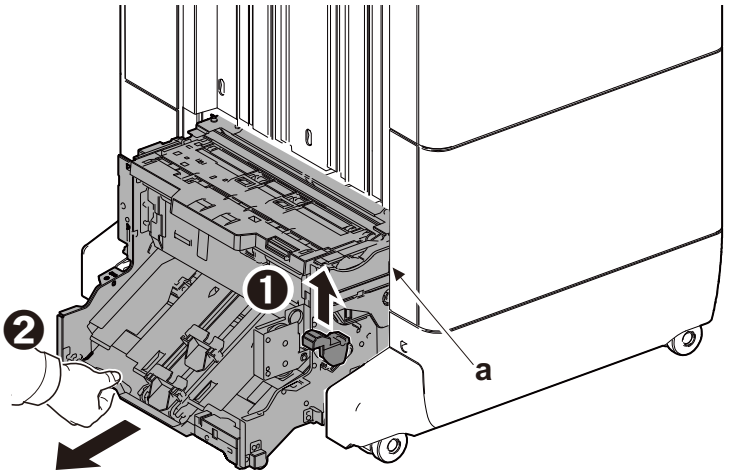

2 Remove 4 screws (a) and detach the guide (b).

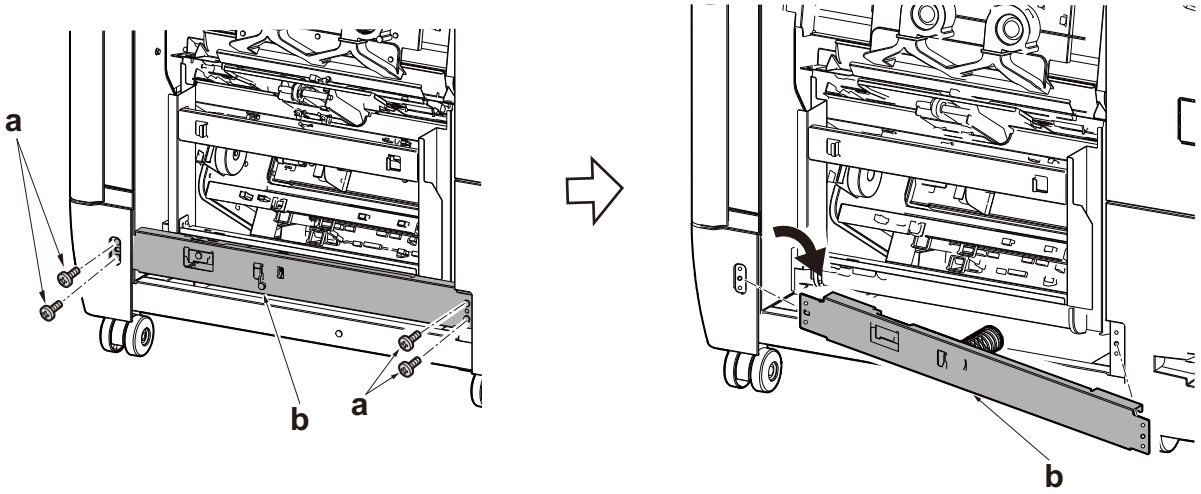

3 Disconnect two connectors (a).

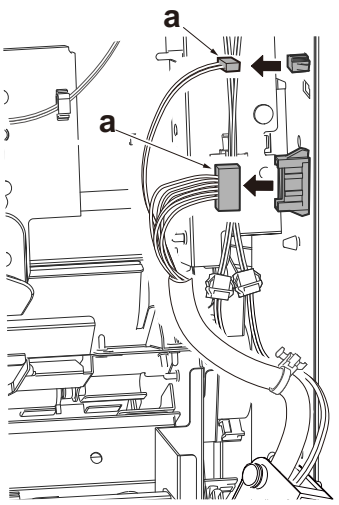

4 Disconnect two connectors (a).

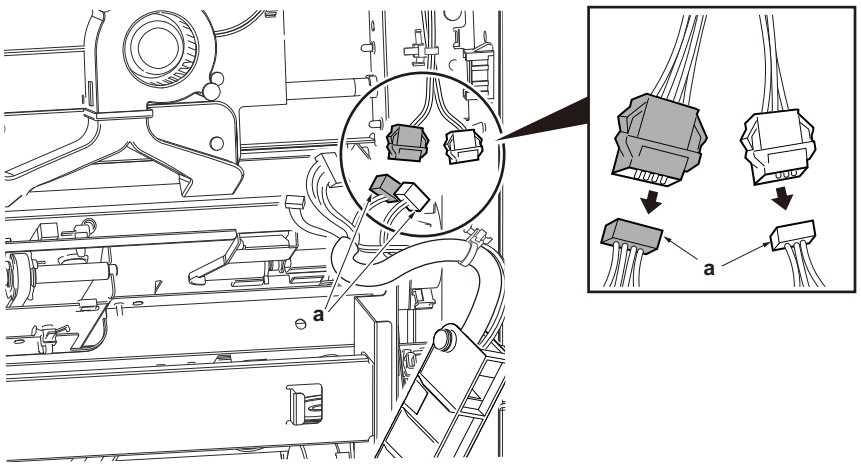

5 Remove the band (b) from frame and take the wire out.

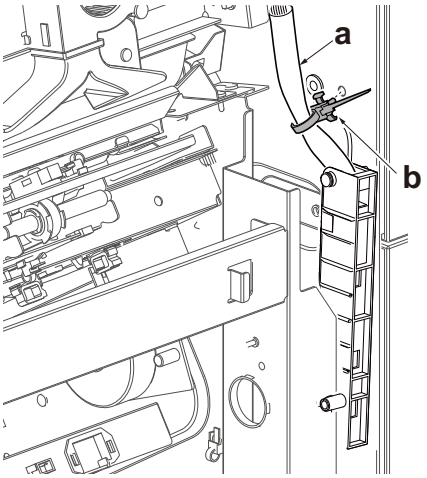

6 Remove screw (b) and take the ground wire (a) away.

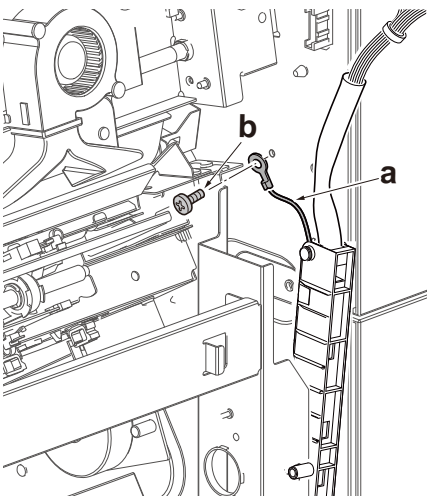

7 Remove screw (b) and detach the wire guide (a).

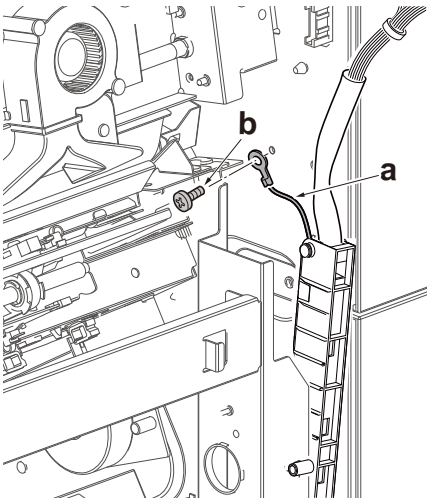

8 Remove four screws (a) and remove the middle conveying unit (b).

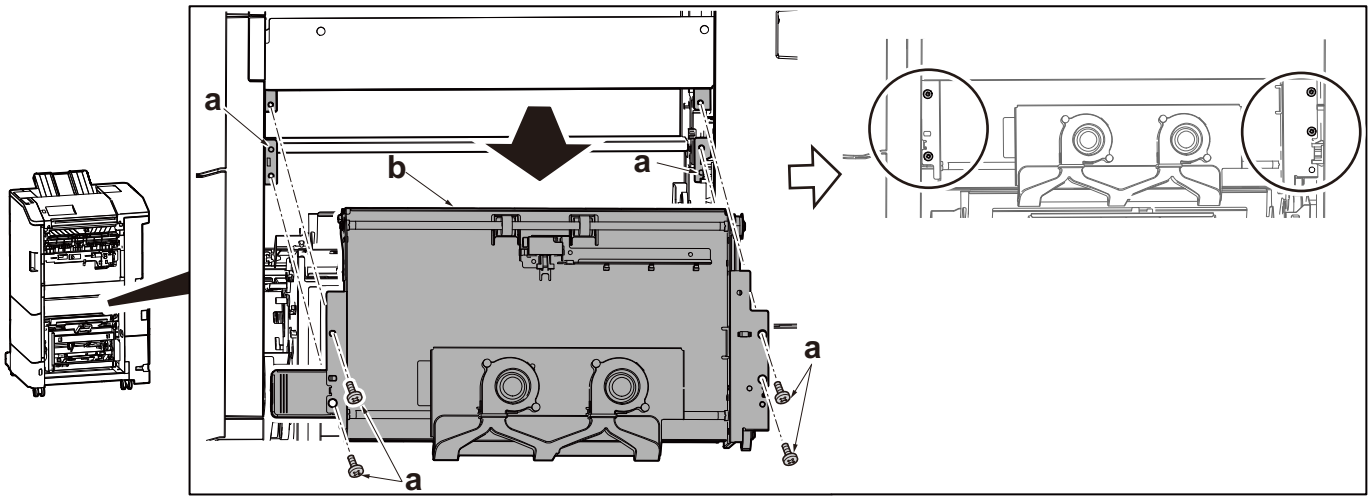

9 Open exit cover (a) and hold up exit tray unit (b).

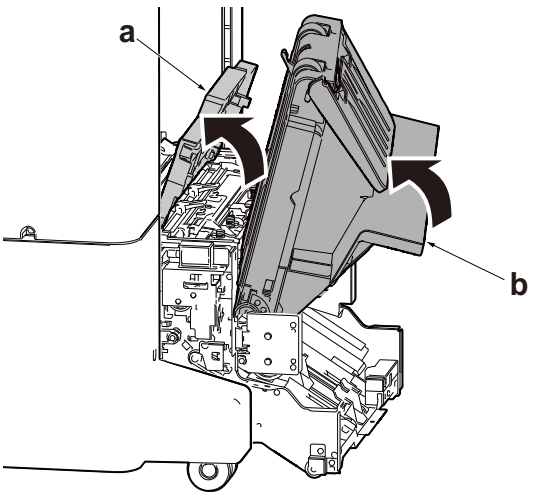

10 Remove screw (a) (M3x10 Black TP) and take side cover front (b) away.

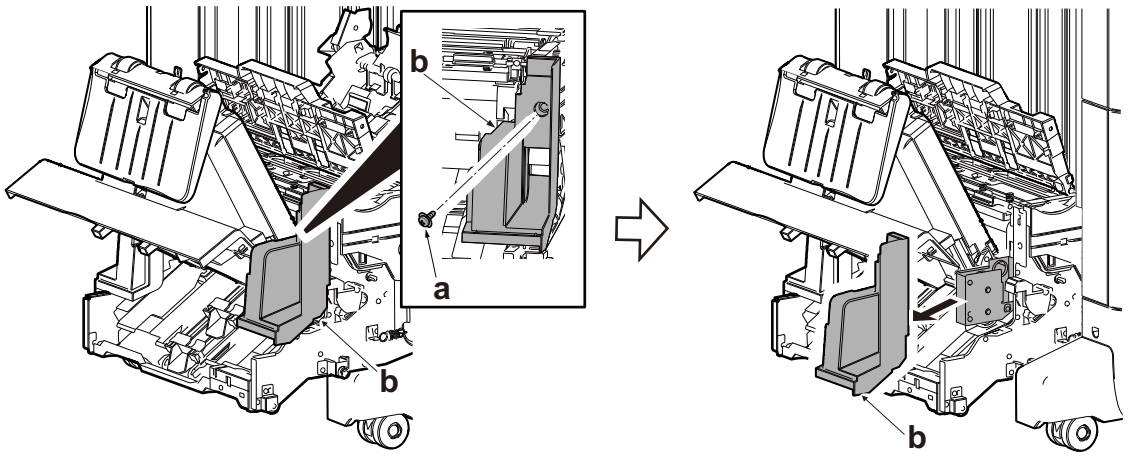

11 Remove screw (a) (M3x10 Black TP) and take side cover rear (b) away.

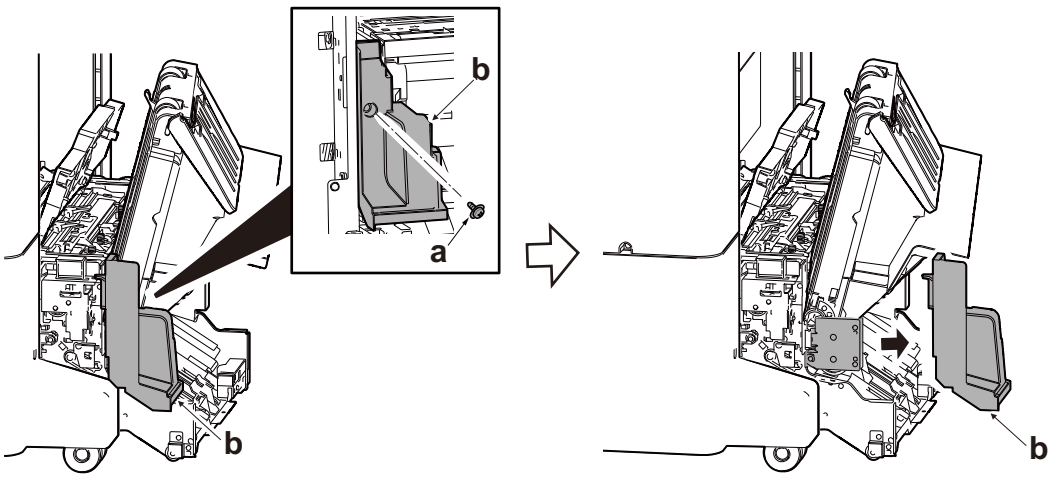

12 Put down exit tray unit (b) and close exit cover (a).

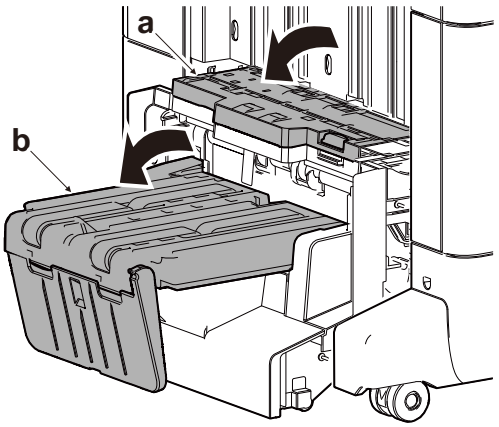

13 Remove screw (a) and take the ground wire out.

14 Remove the connector (c) from the connector (d).

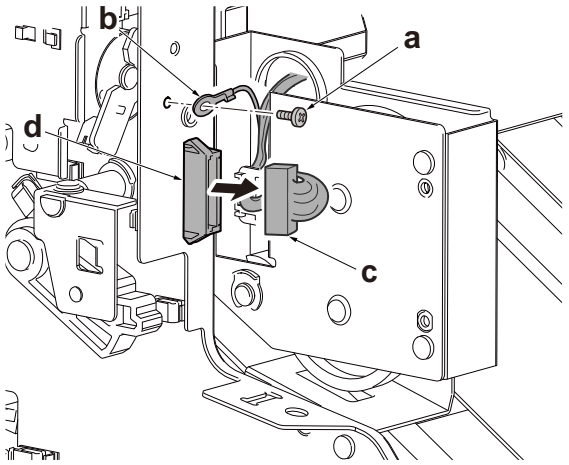

15 Remove four screws (a) and detach the exit tray support plate rear (b).

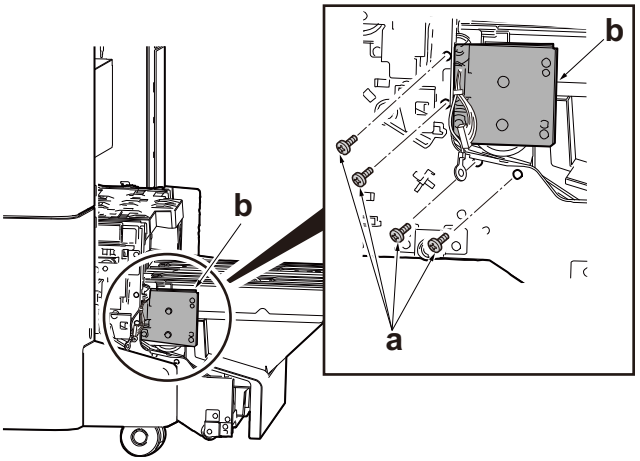

16 Detach the exit conveying tray unit (a).

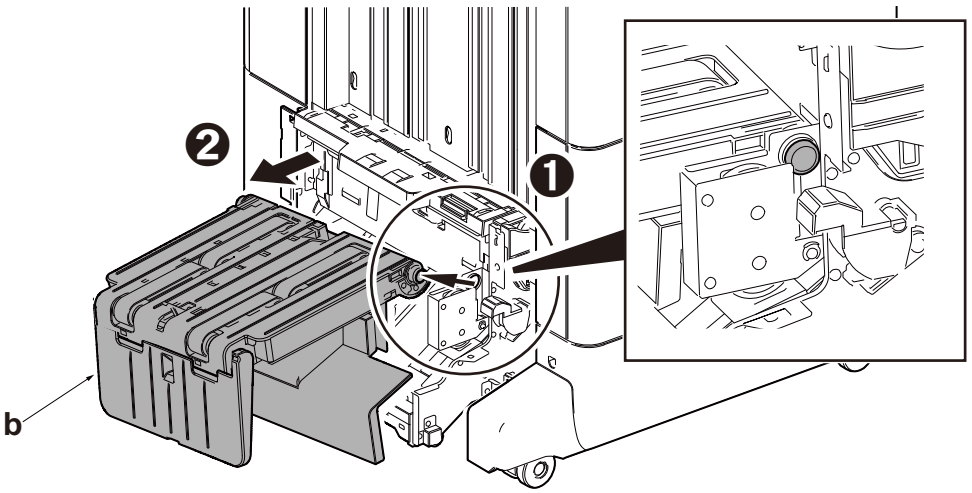

17 Push in Booklet unit (a) into DF.

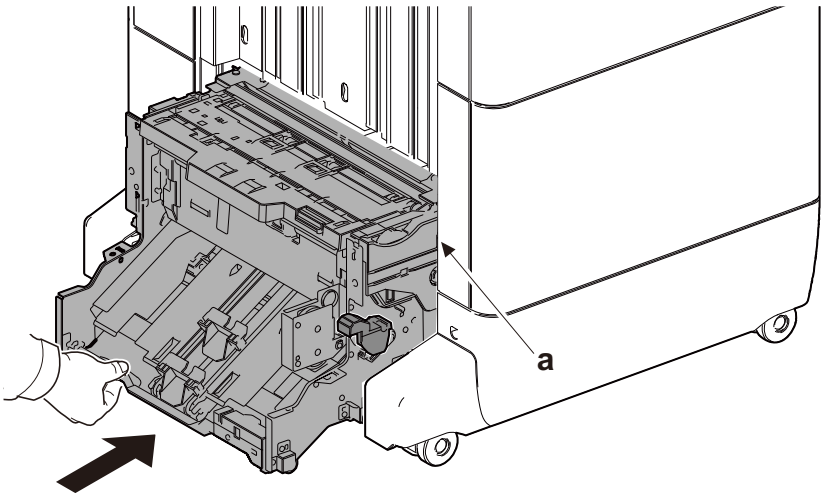

18 Take Booklet unit (a) away from the right side of DF.

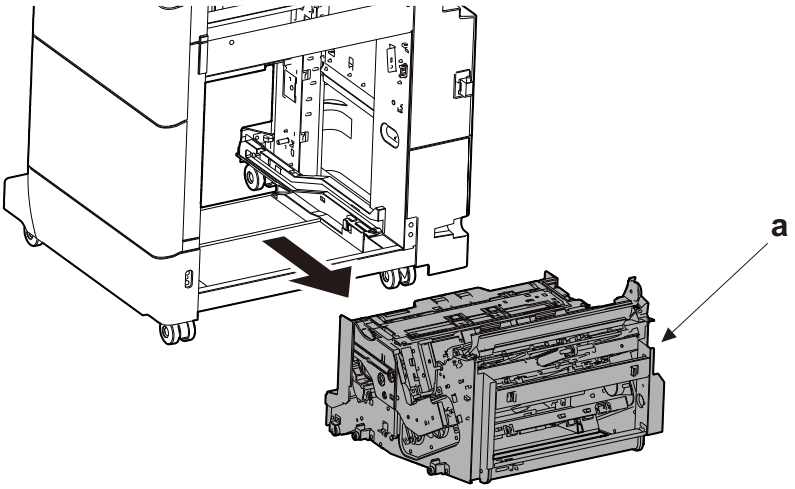

(14-2)Detaching and reattaching the BF staple unit

1 Remove 4 screws (a) (M4x10) and remove the 2 brackets (b) in the direction of the arrow.

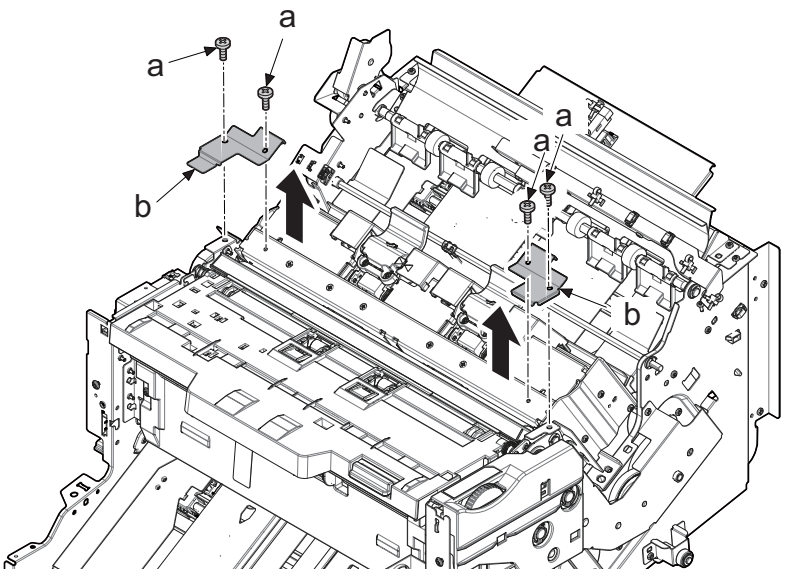

2 Remove 2 screws (a) (M4x10) and remove the BF staple unit (b) in the direction of the arrow.

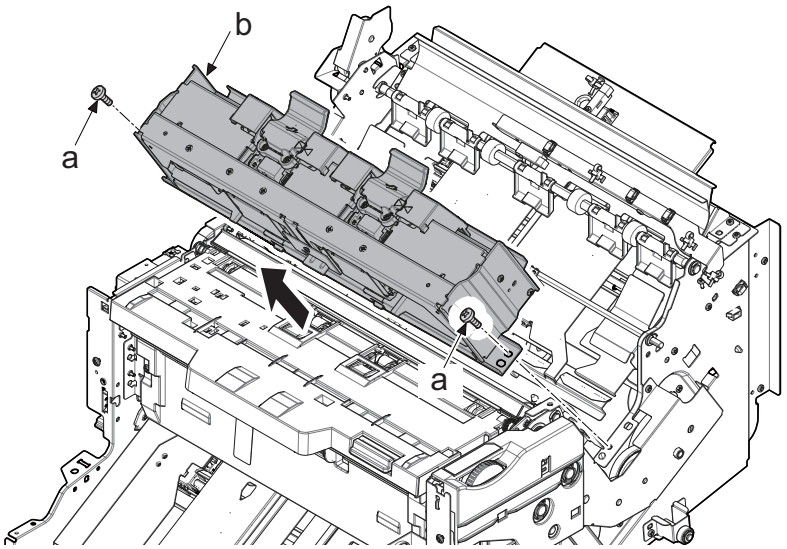

(14-3)Detaching and reattaching the BF PWB

1 Raise the BF unit (a) upward.

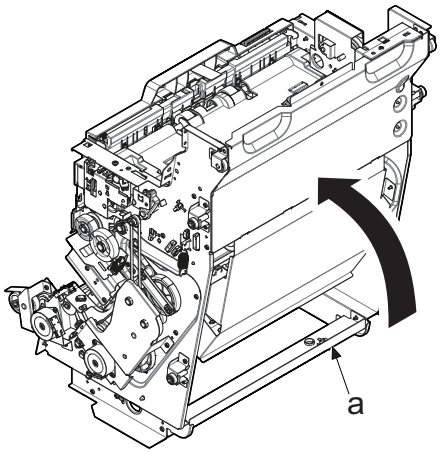

2 Remove 4 screws (a) and remove the PWB cover (b) in the direction of the arrow.

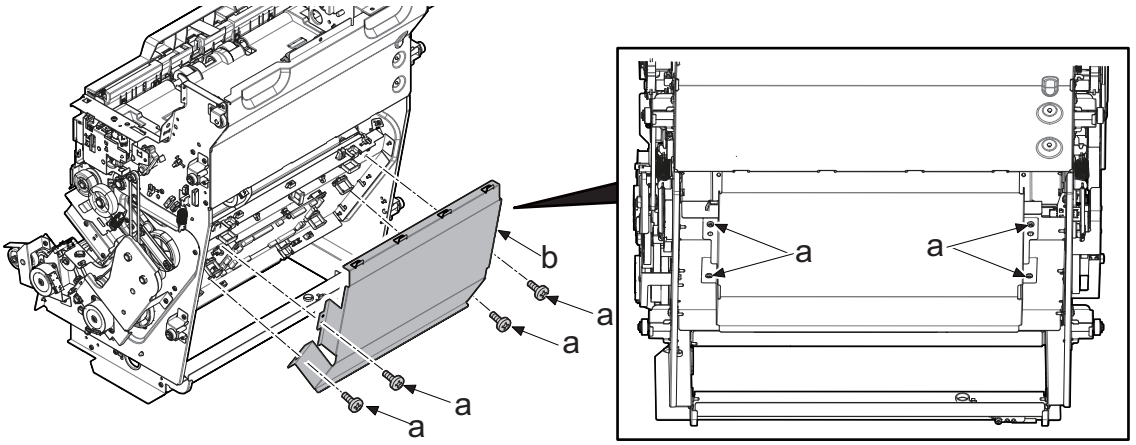

3 Disconnect all connectors.

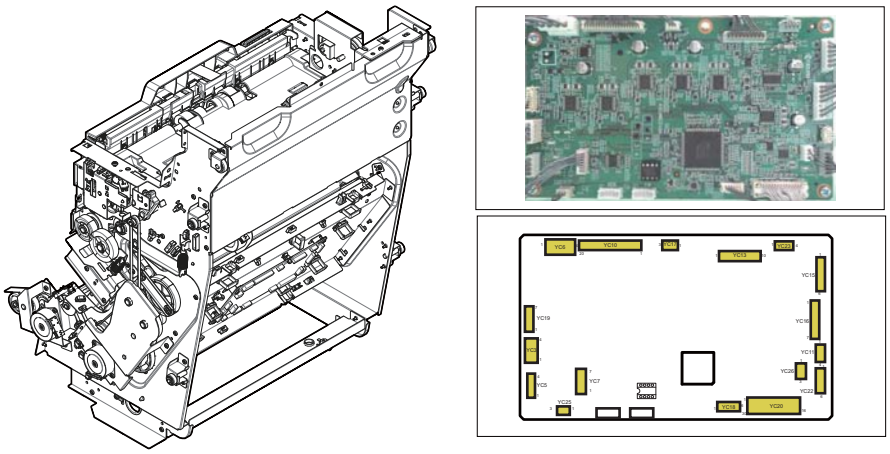

4 Remove four screws (a) .

5 Release lock for saddle (b) and take BF PWB away.

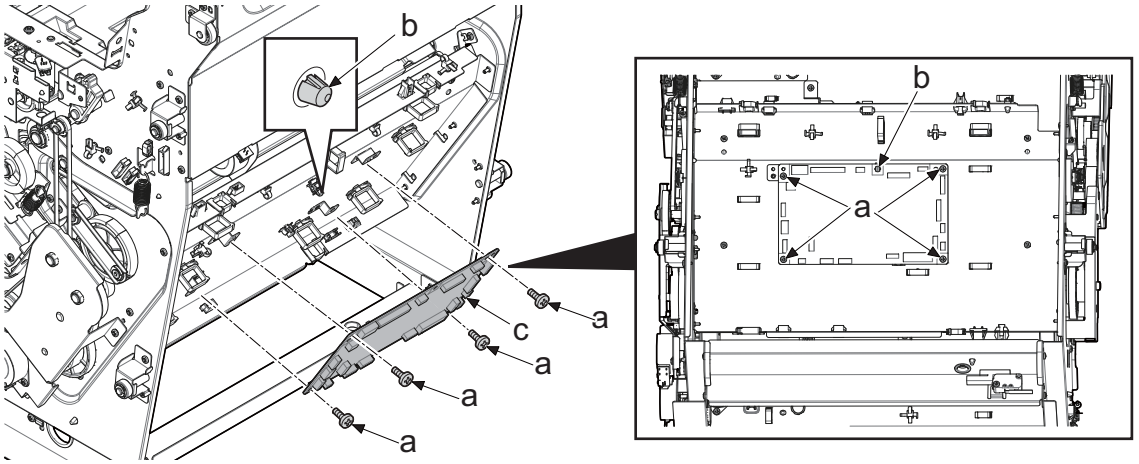

Notes for BF PWB replacement

- When replacing the BF PWB, make sure to remove the EEPROM from the old board and install it in the new board.
- Install the latest firmware after replacement.

(15)Inserter (IS-7100)

(15-1)Exterior Covers

Rear upper cover / Rear middle cover

1 Remove 2 screws (a).

2 Remove Rear upper cover (b).

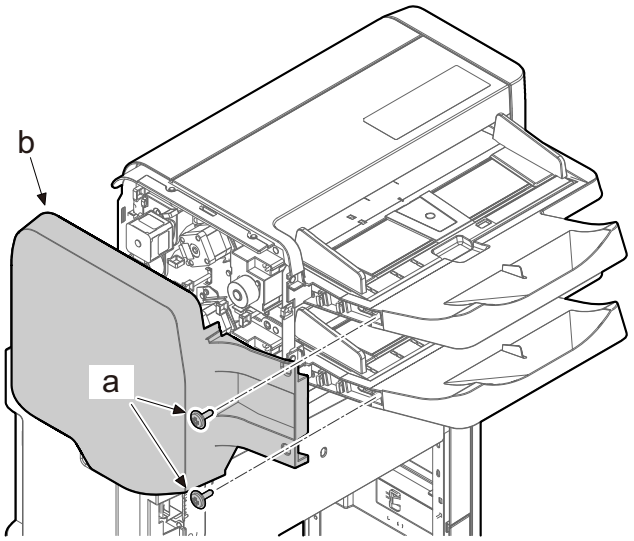

3 Remove 2 screws (a).

4 Remove Rear middle cover (b).

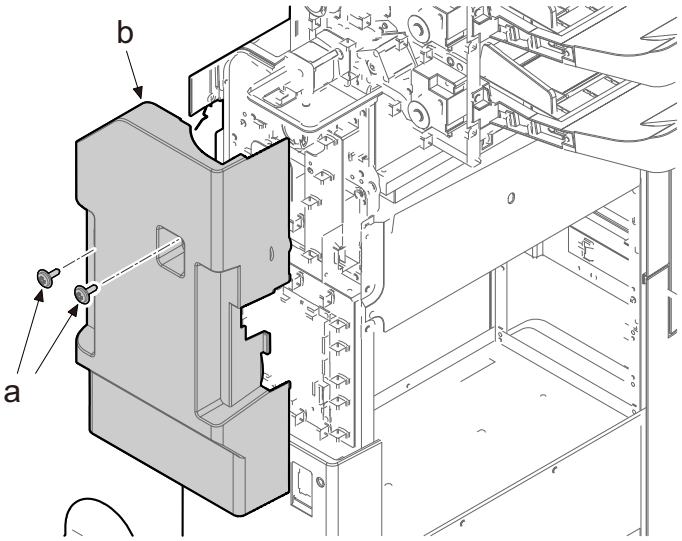

Right cover /Front upper cover

5 Remove 2 screws (a).

6 Remove Right cover (b).

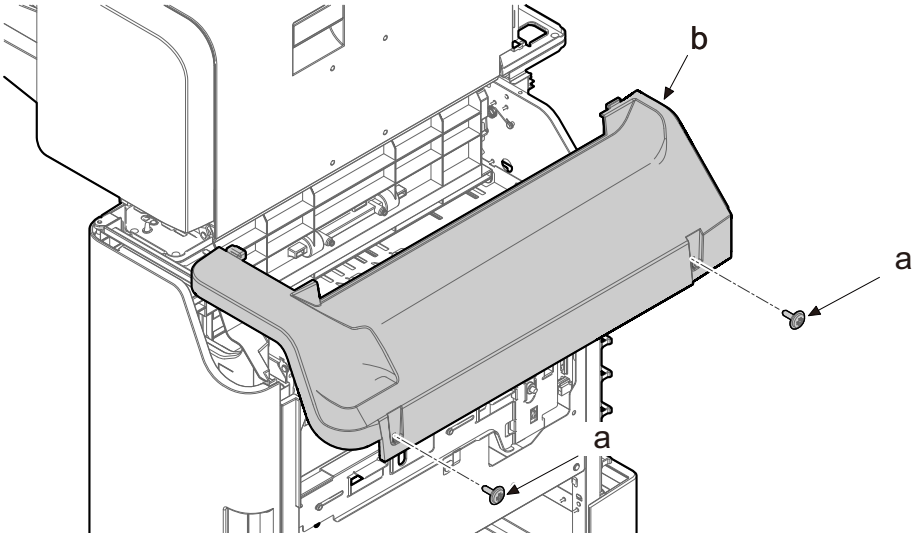

7 Remove screws (a).

8 Remove Front upper cover (b).

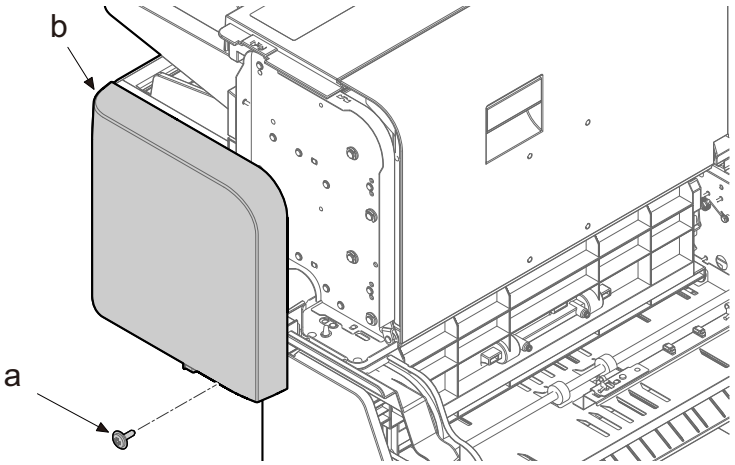

(15-2)PWBs

IS PWB

1 Remove 2 screws (a).

2 Remove Rear middle cover (b).

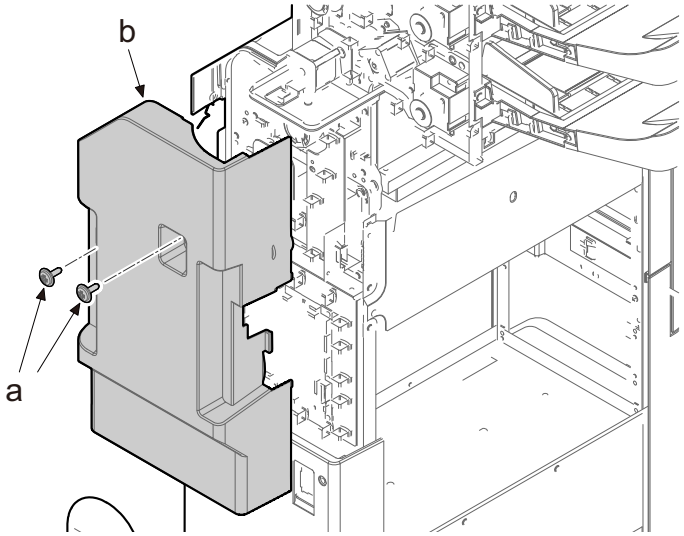

3 Remove the all connectors.

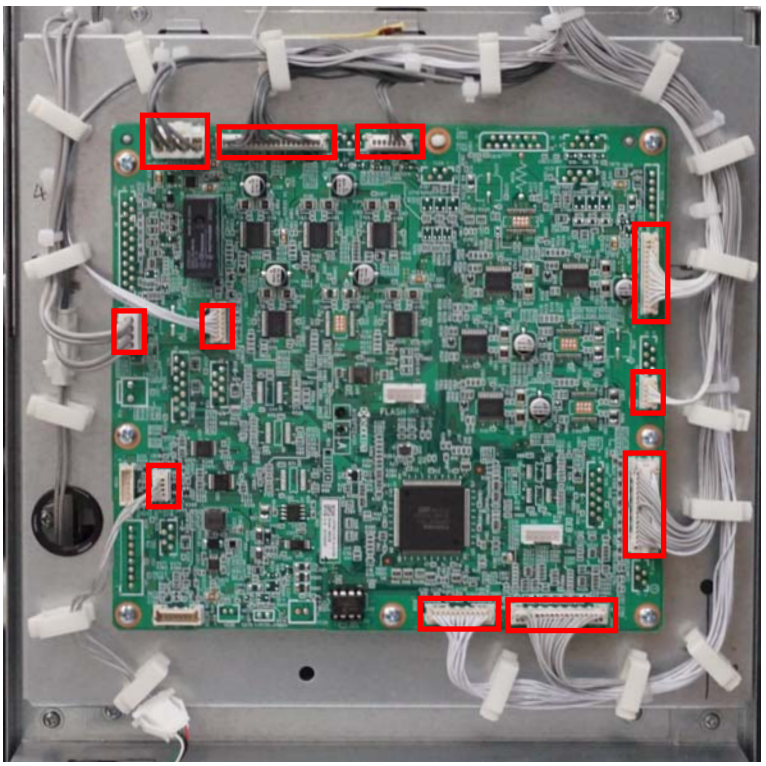

4 Remove 6 screws (a).

5 Release board support (b).

6 Remove IS PWB (c).

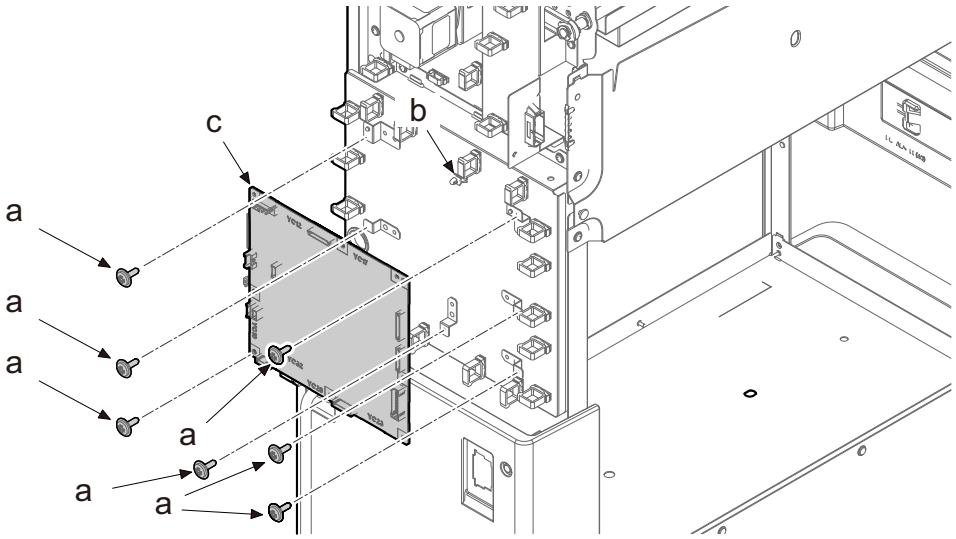

(15-3)Motors

IS upper tray paper feed motor

1 Remove 2 screws (a).

2 Remove Rear upper cover (b).

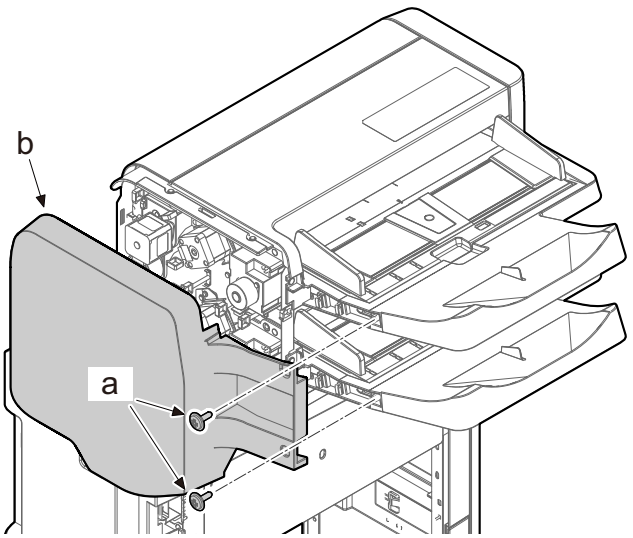

3 Remove connector (a).

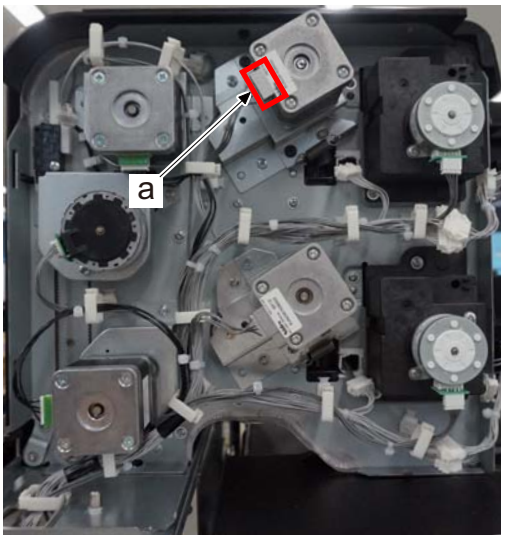

4 Remove tension spring (a).

5 Remove screws (b).

6 Remove pin (c).

7 Remove IS upper tray paper feed motor (d) with mount plate.

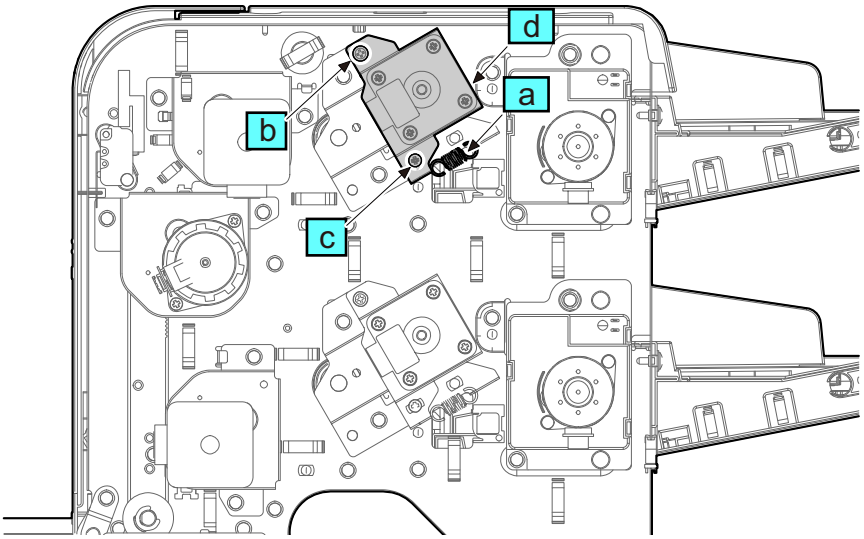

IMPORTANT

When attaching the IS upper tray paper feed motor, fix the attachment plate after hanging the pulley (A) at the inside of the belt (B).

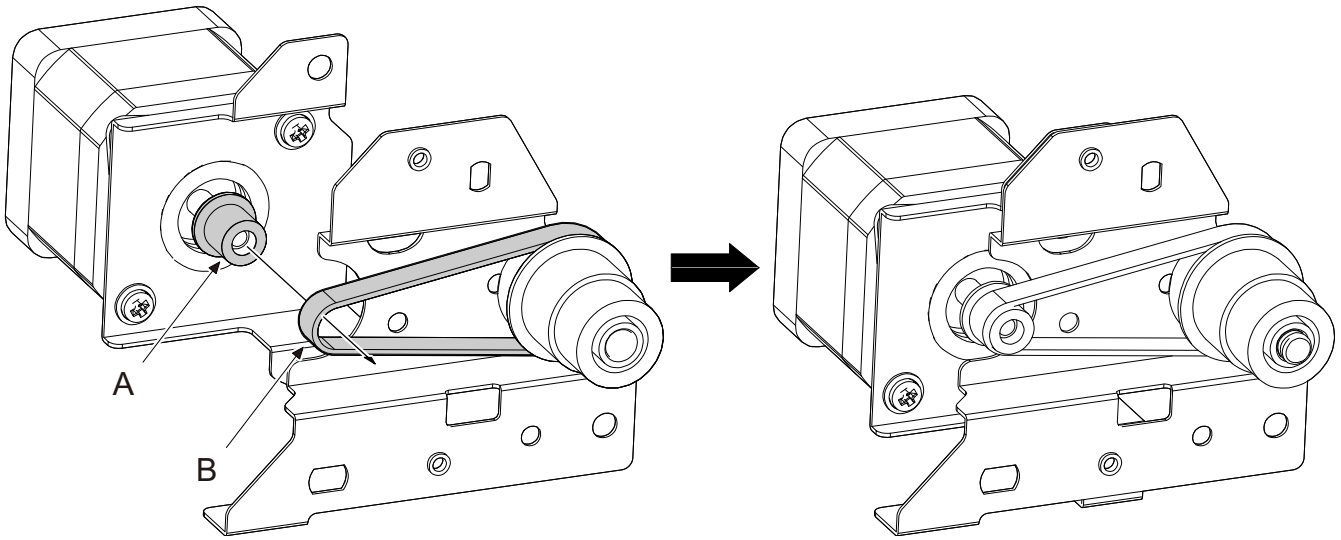

IMPORTANT

When attaching the IS upper tray paper feed motor, after hanging the tension spring, loosen the fixed screw (a) of the attachment plate then tighten the screw again while the tension of the tension spring has applied on the belt.

1 Attach the pin (c).

2 Attach the screw (b).

3 Attach the tension spring (a).

4 loosen the screw (b).

5 Applying the tension of spring (a) to the belt tighten the screw (b).

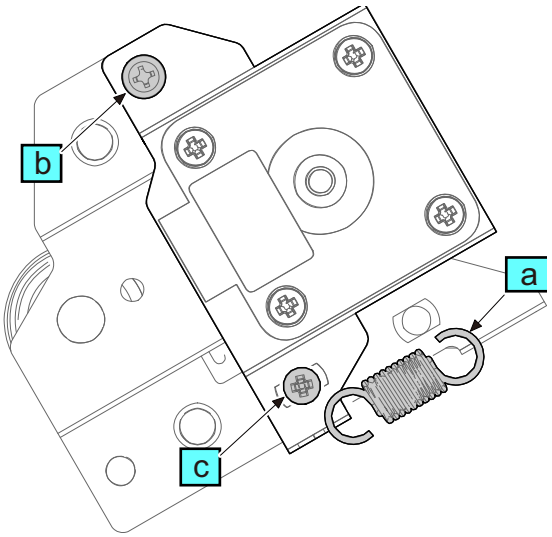

IS upper tray lift motor

1 Remove 2 screws (a).

2 Remove Rear upper cover (b).

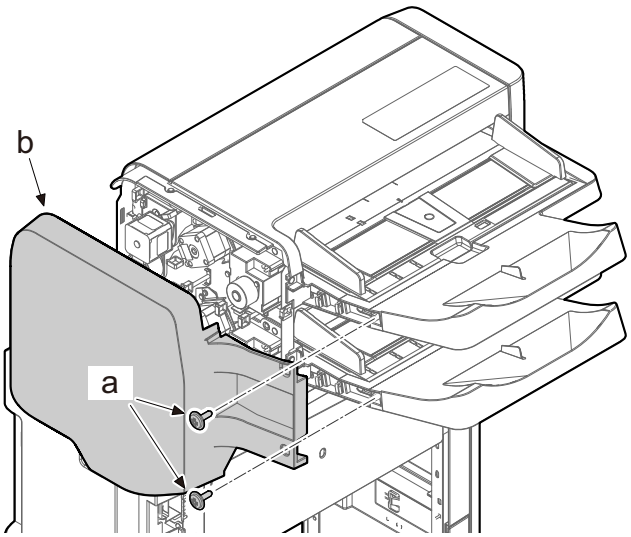

3 Remove connector (a).

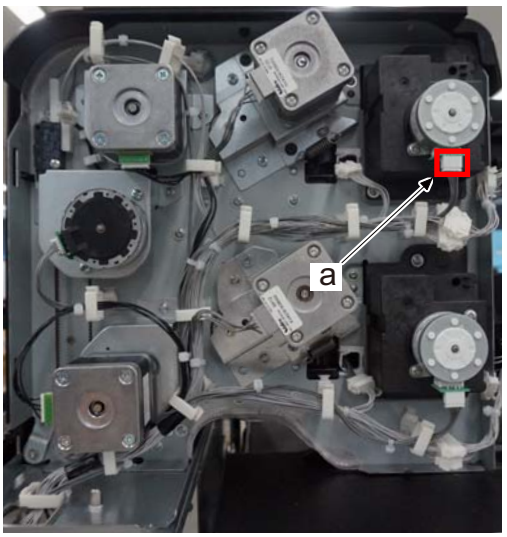

4 Remove 2 screws (a).

5 Remove IS upper tray lift motor (b).

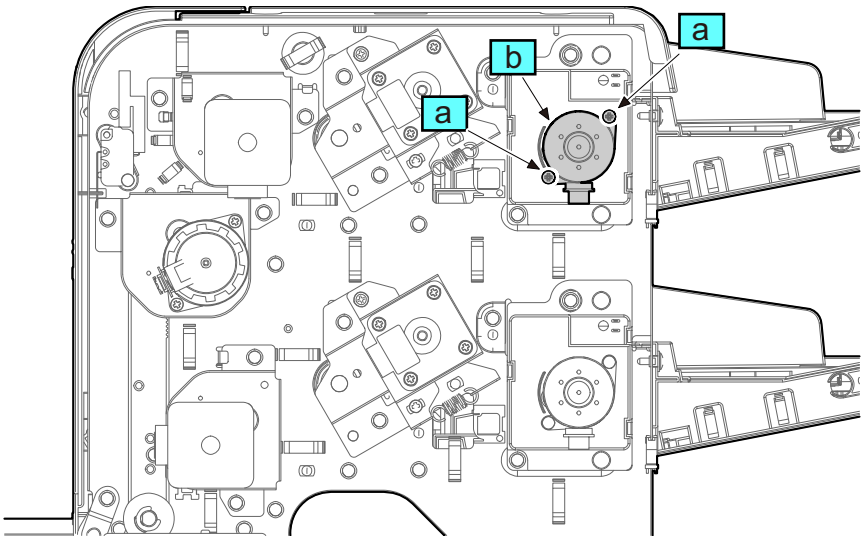

IS upper tray registration motor

1 Remove 2 screws (a).

2 Remove Rear upper cover (b).

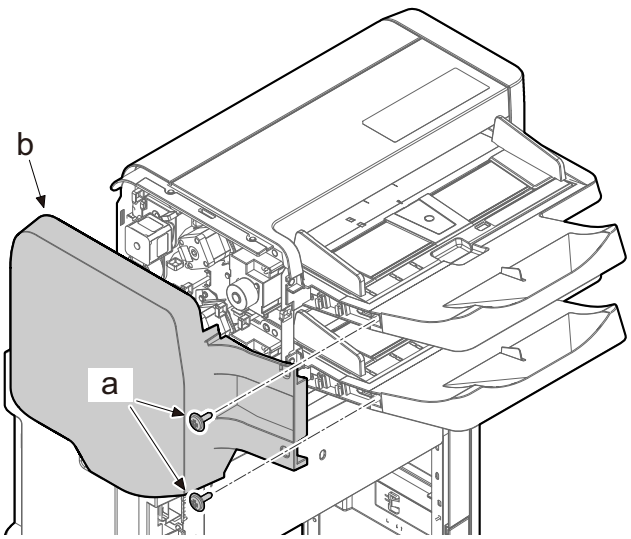

3 Remove connector (a).

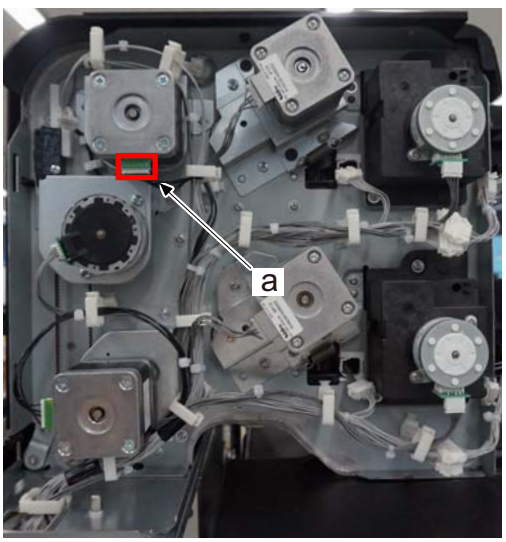

4 Remove 2 screws (a).

5 IS upper tray registration motor (b) with mount plate.

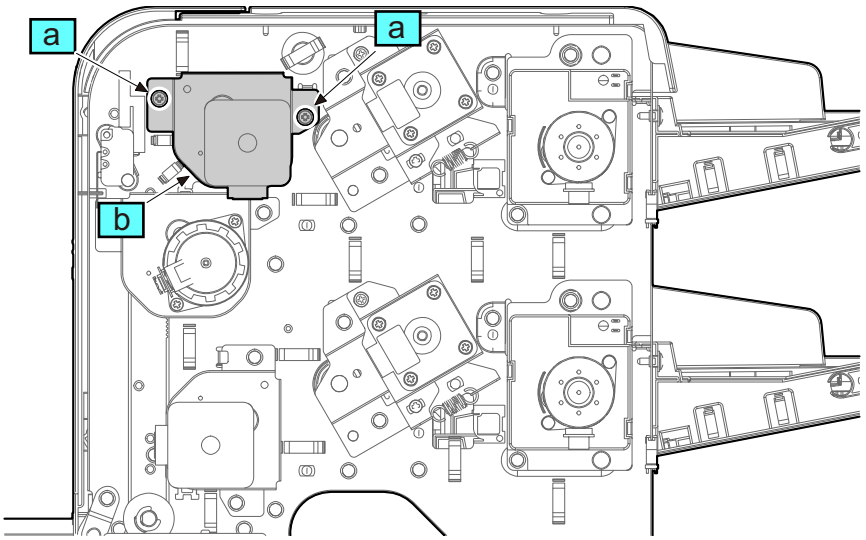

IS conveying motor

1 Remove 2 screws (a).

2 Rear upper cover (b).

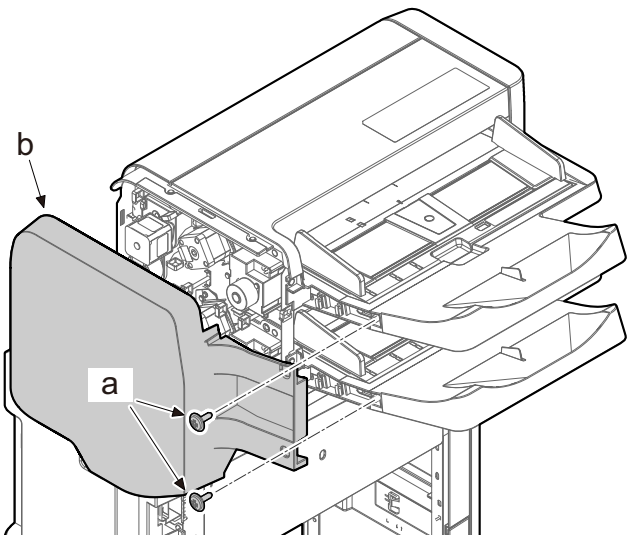

3 Remove connector (a).

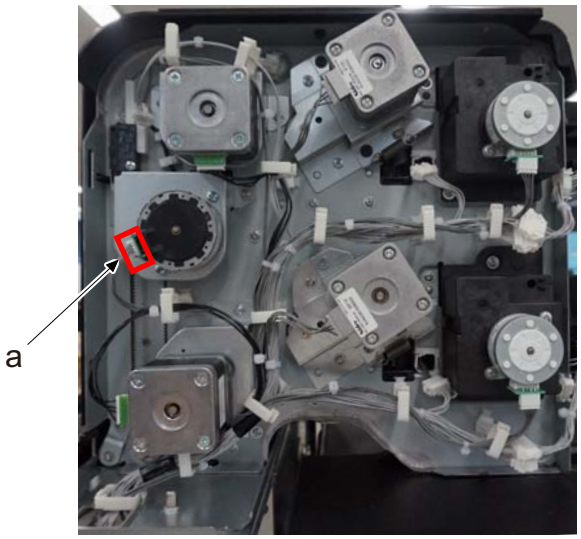

4 Remove 2 screws (a).

5 Remove IS conveying motor (b).

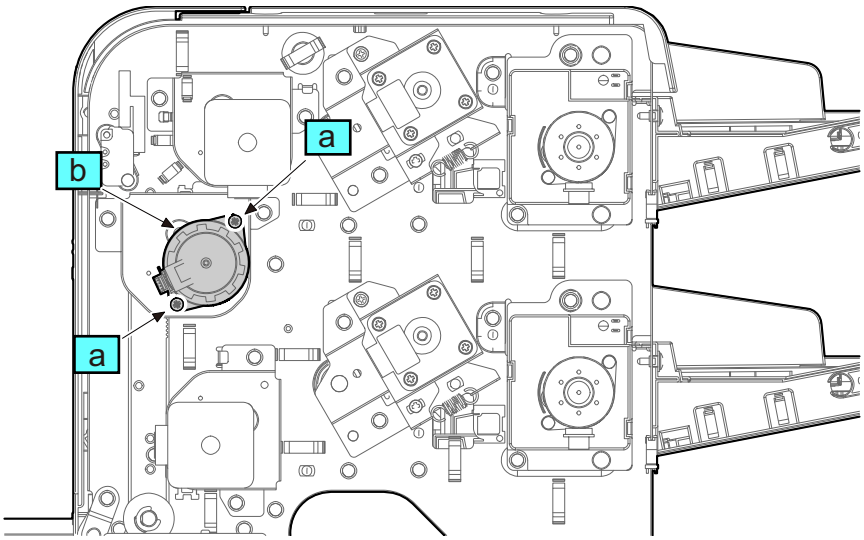

IS lower tray paper feed motor

1 Remove 2 screws (a).

2 Remove Rear upper cover (b).

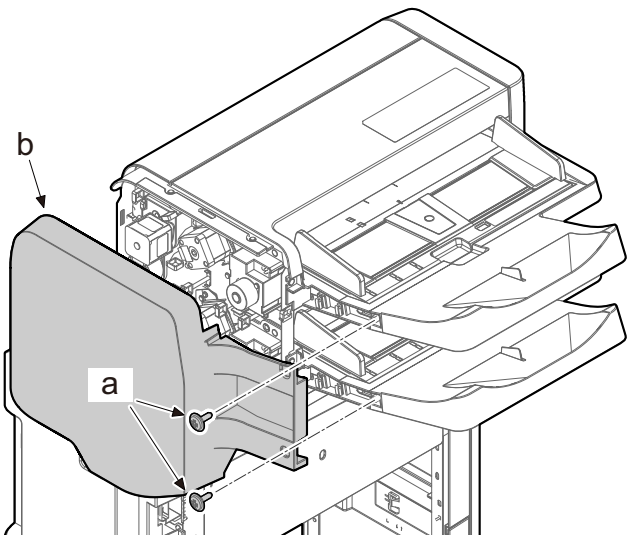

3 Remove connector (a).

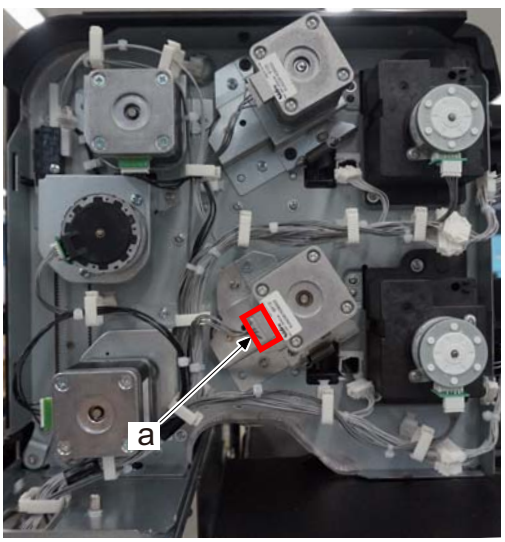

4 Remove tension spring (a).

5 Remove screws (b).

6 Remove pin (c).

7 IS lower tray paper feed motor (d) with mount plate.

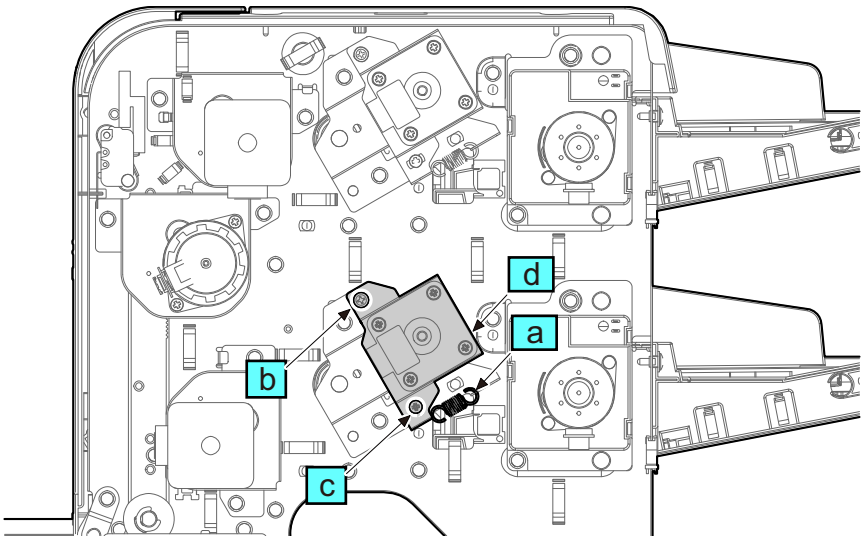

IMPORTANT

IS When attaching the IS lower tray paper feed motor, fix the attachment plate after hanging the pulley (A) at the inside of the belt (B).

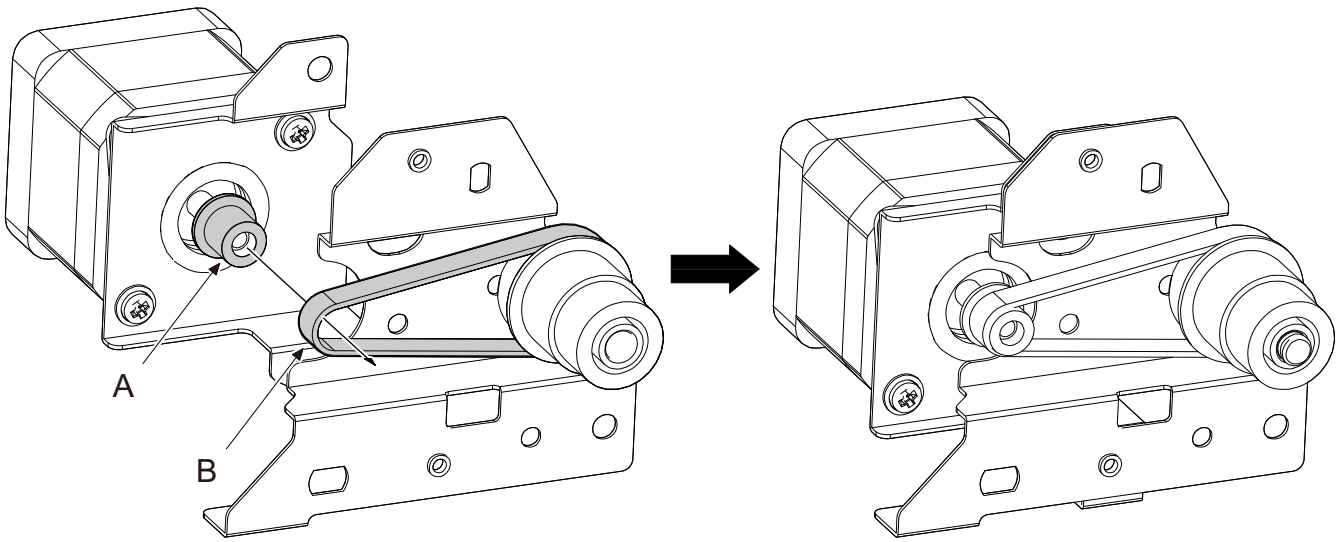

IMPORTANT

When attaching the IS lower tray paper feed motor, after hanging the tension spring (a), loosen the fixed screw (b) of the attachment plate then tighten the screw (b) again while the tension of the tension spring has applied on the belt.

1 Attach the pin (c).

2 Attach the screw (b).

3 Attach the tension spring (a).

4 loosen the screw (b).

5 Applying the tension of spring (a) to the belt tighten the screw (b).

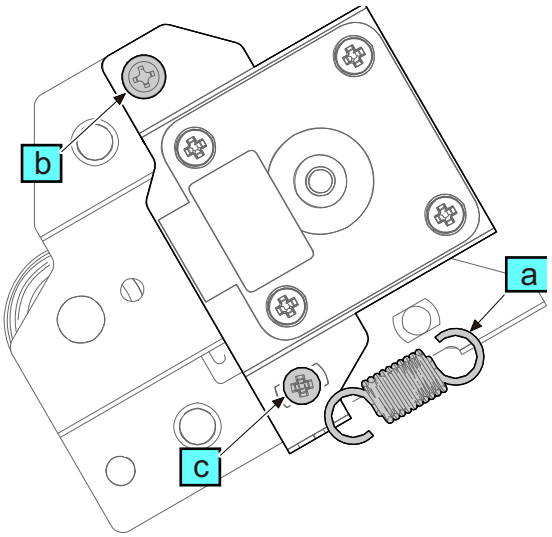

IS lower tray lift motor

1 Remove 2 screws (a).

2 Remove Rear upper cover (b).

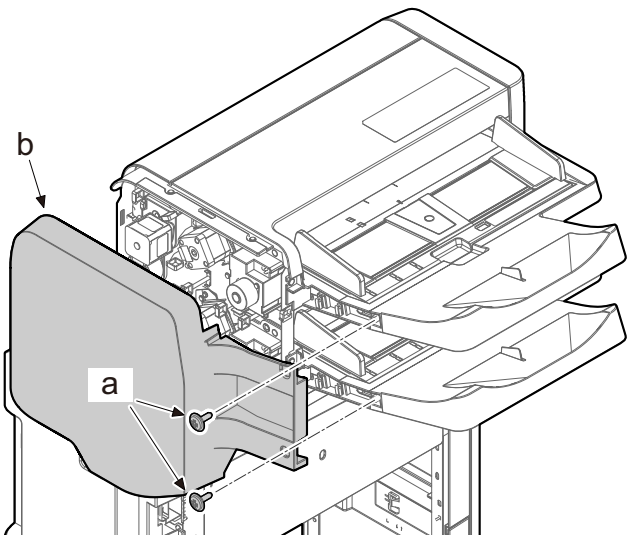

3 Remove connector (a).

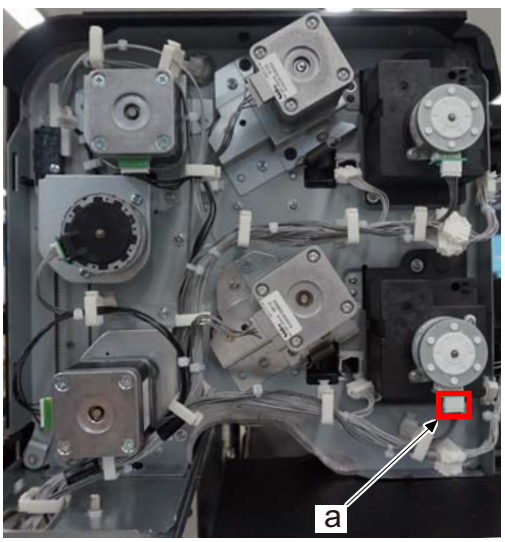

4 Remove 2 screws (a).

5 Remove IS lower tray lift motor (b).

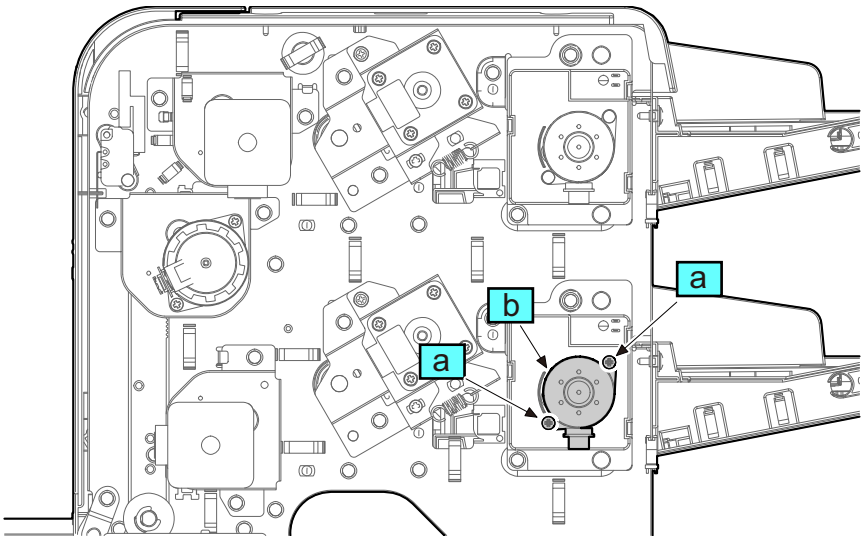

IS lower tray registration motor

1 Remove 2 screws (a).

2 Remove Rear upper cover (b).

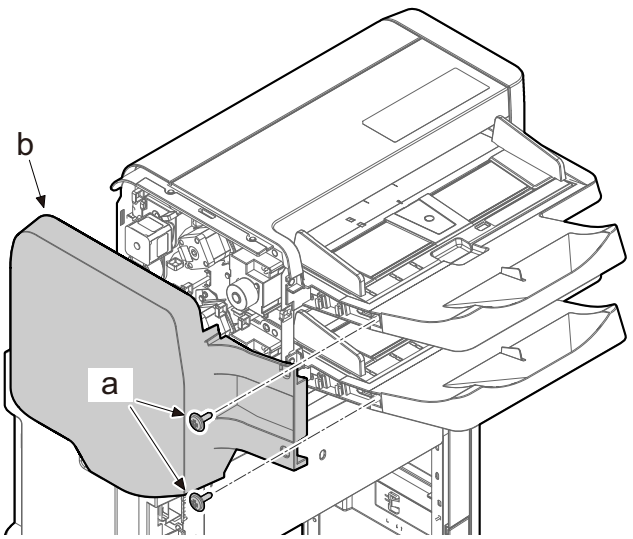

3 Remove connector (a).

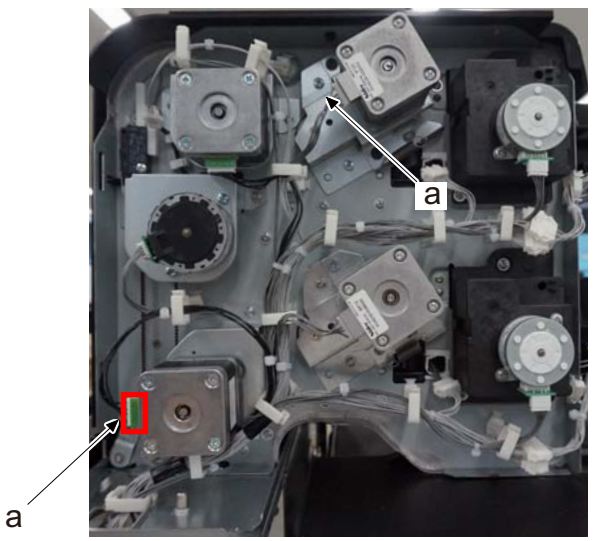

4 Remove 2 screws (a).

5 IS lower tray registration motor (b) with mount plate.

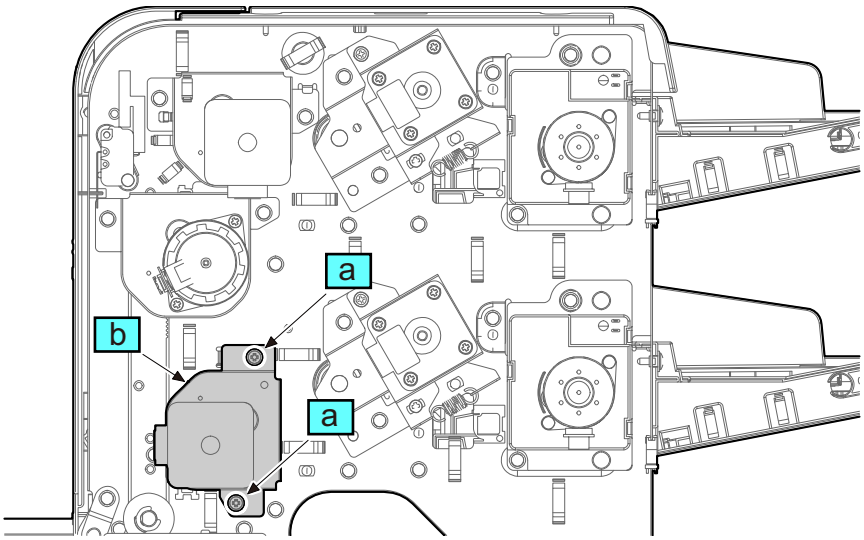

IS confluence conveying motor

1 Remove 2 screws (a).

2 Remove Rear middle cover (b).

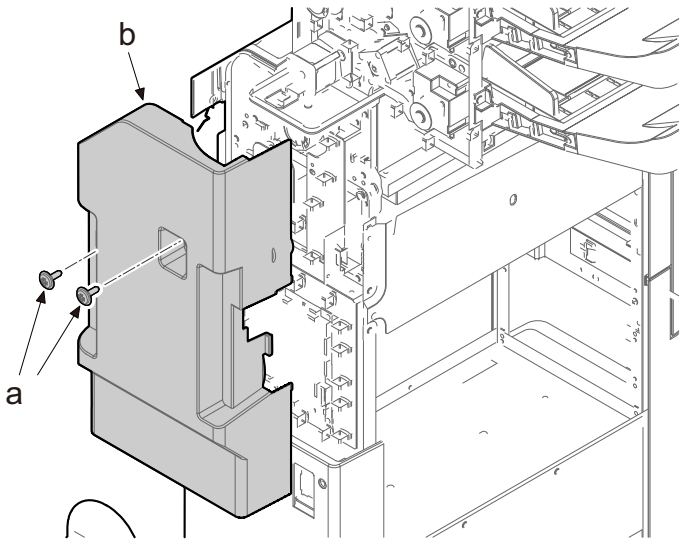

3 Remove connector (a).

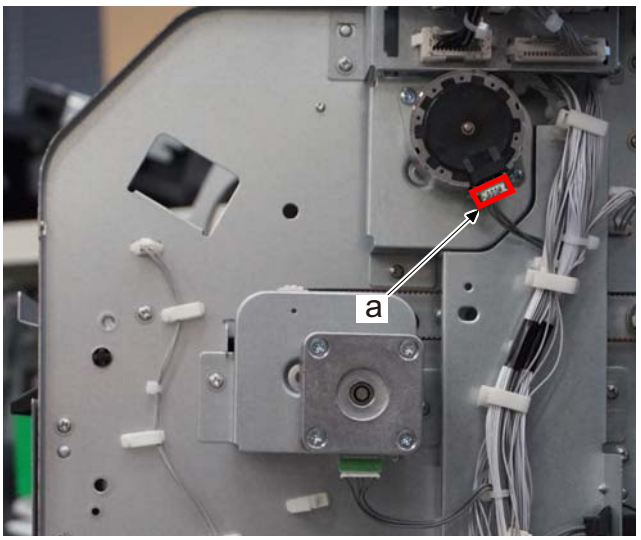

4 Remove 2 screws (a).

5 Remove IS confluence conveying motor (b).

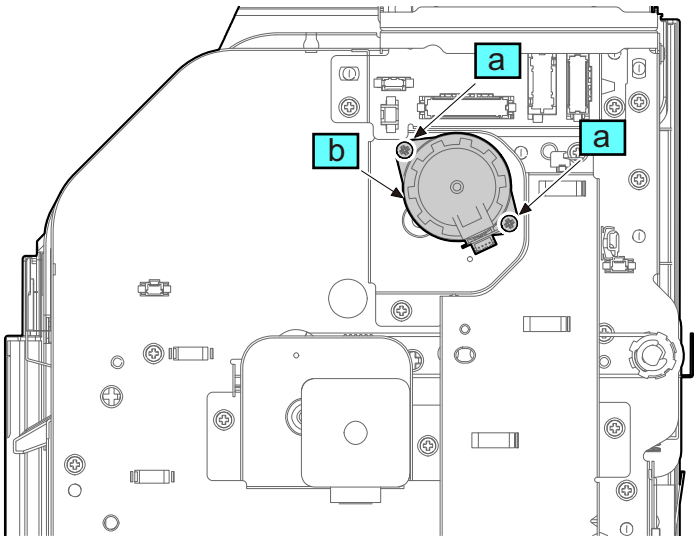

IS horizontal conveying motor

1 Remove 2 screws (a).

2 Remove Rear middle cover (b).

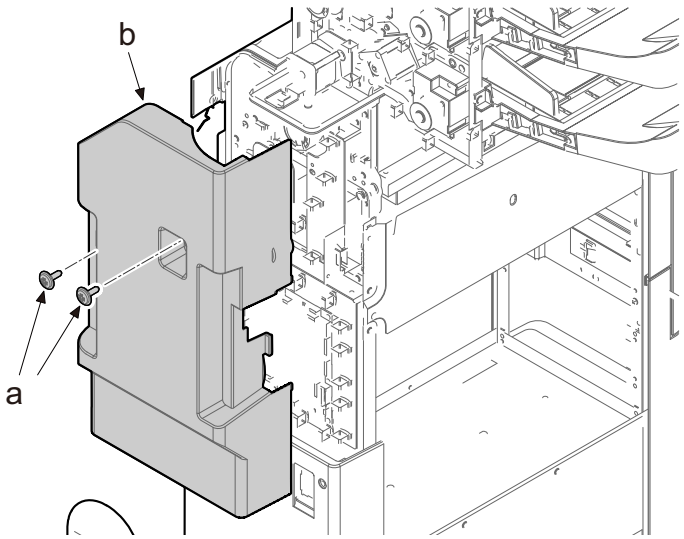

3 Remove connector (a).

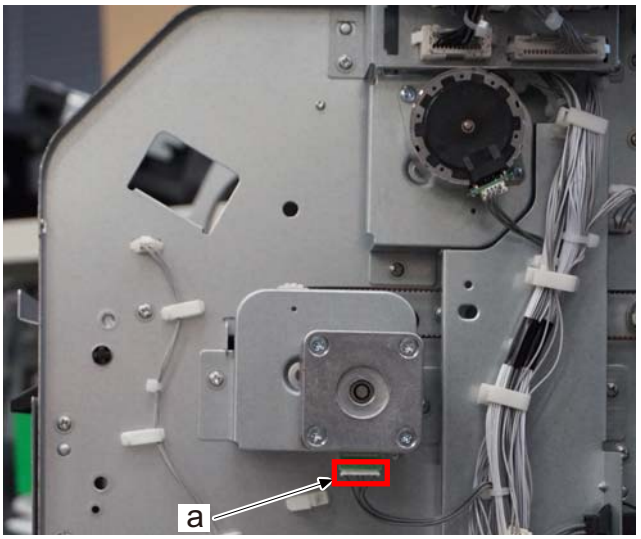

4 Remove 2 screws (a).

5 IS horizontal conveying motor (b) with mount plate.

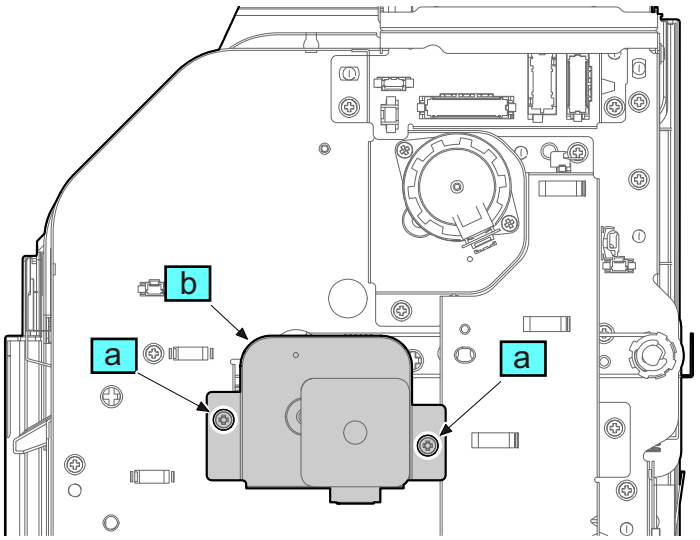

(15-4)paper feed tray unit

IS Upper paper feed tray unit / IS lower paper feed tray unit

1 Remove 2 screws (a).

2 Rear upper cover (b).

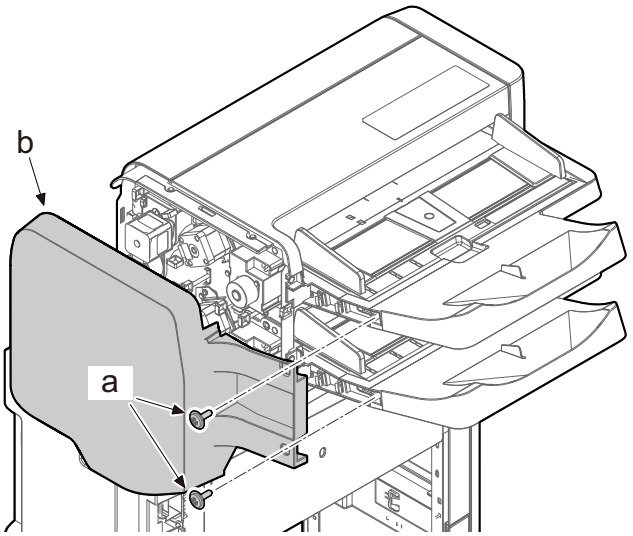

3 Remove 2 screws (a).

4 Remove Right cover (b).

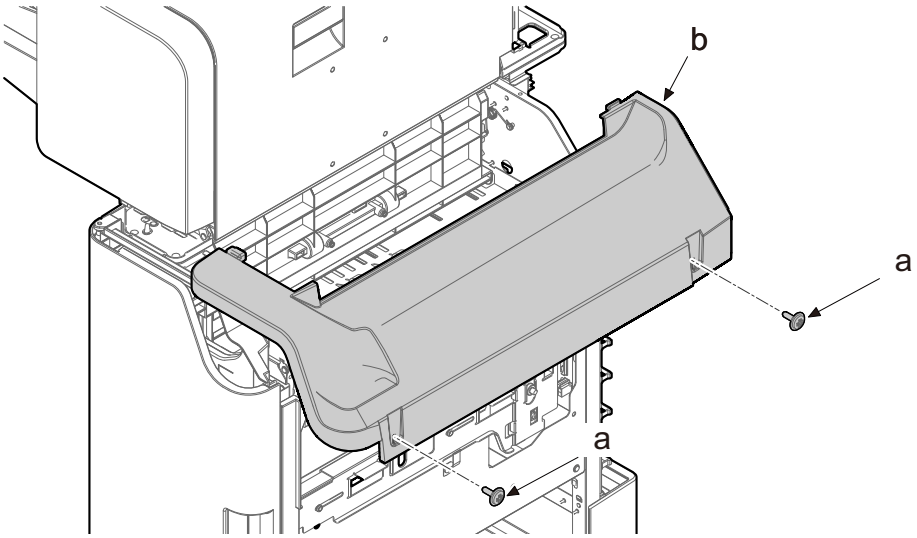

5 Remove 2 screws (a).

6 Remove front upper cover (b).

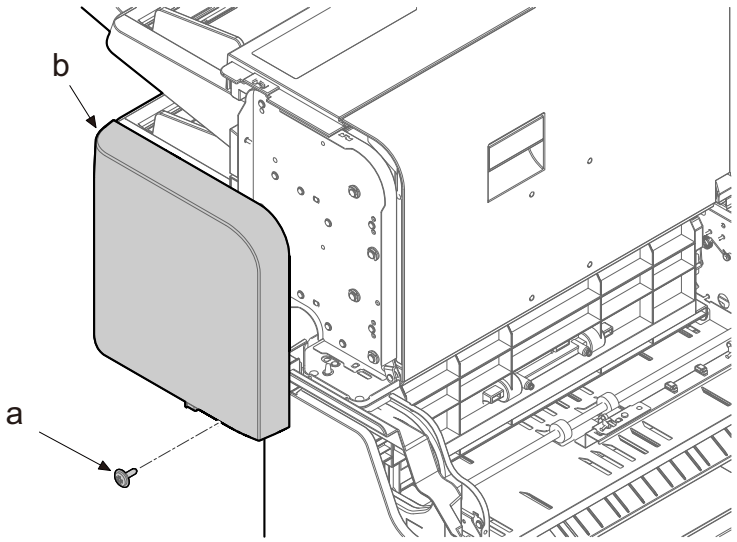

7 Remove 2 connector (a).

8 Release the lock of clamp (b).

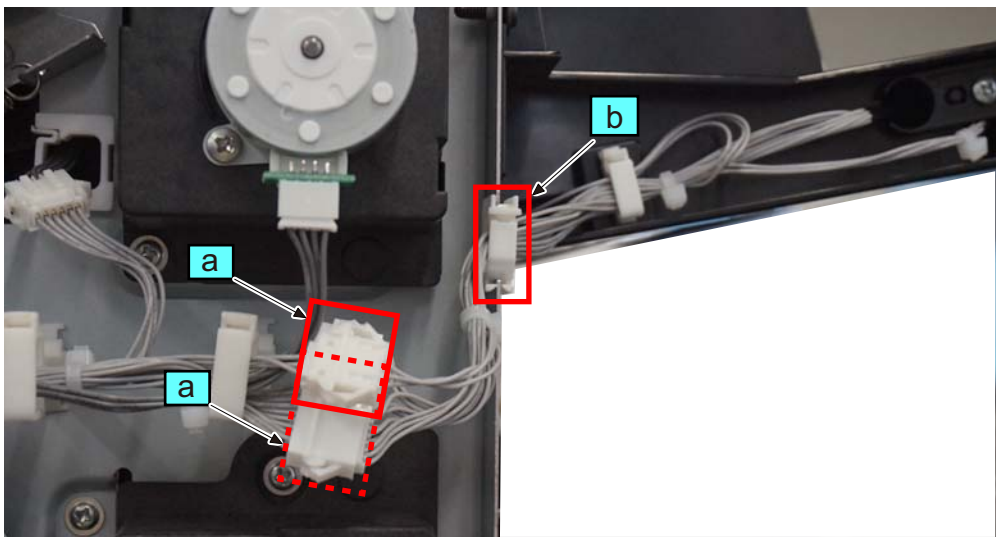

9 Remove 2 screws (a).

10 Remove IS Upper paper feed tray unit (b).

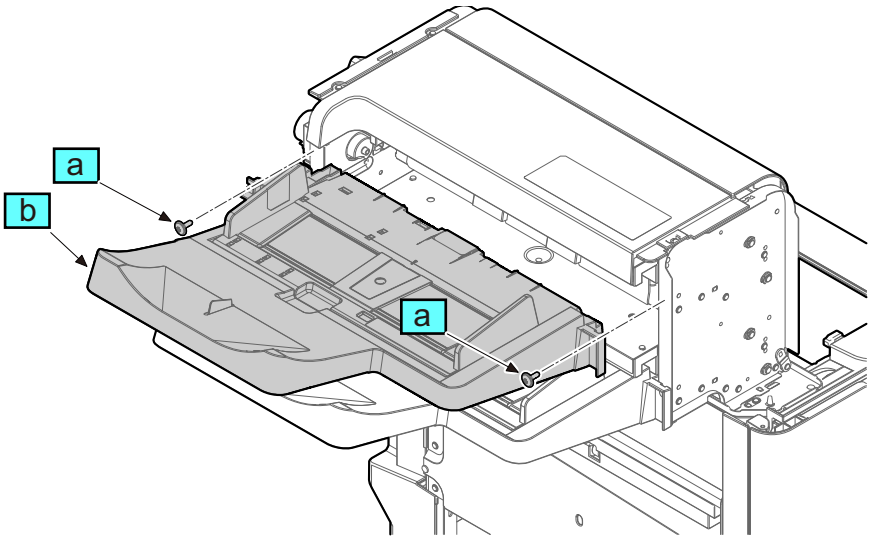

11 Remove 2 connectors (a).

12 Release the lock of clamp (b).

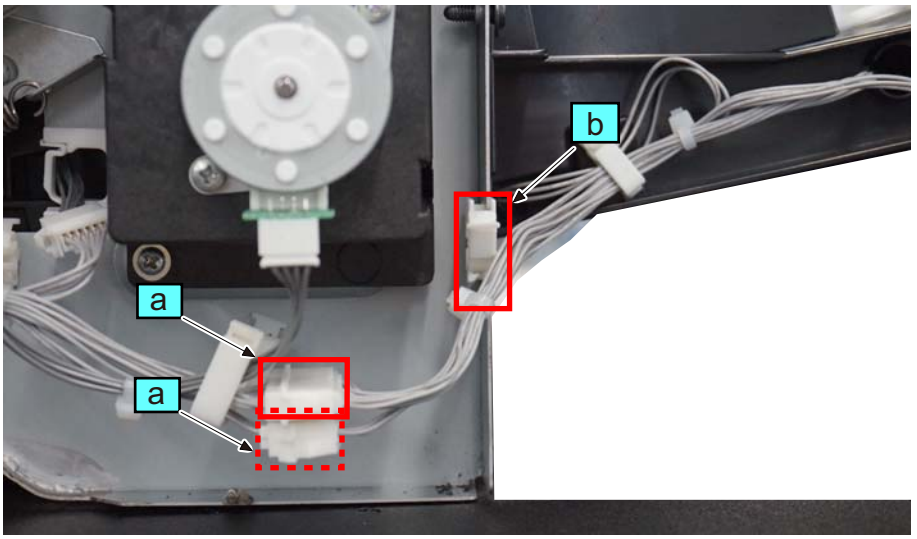

13 Remove 2 screws (a).

14 Remove IS lower paper feed tray unit (b).

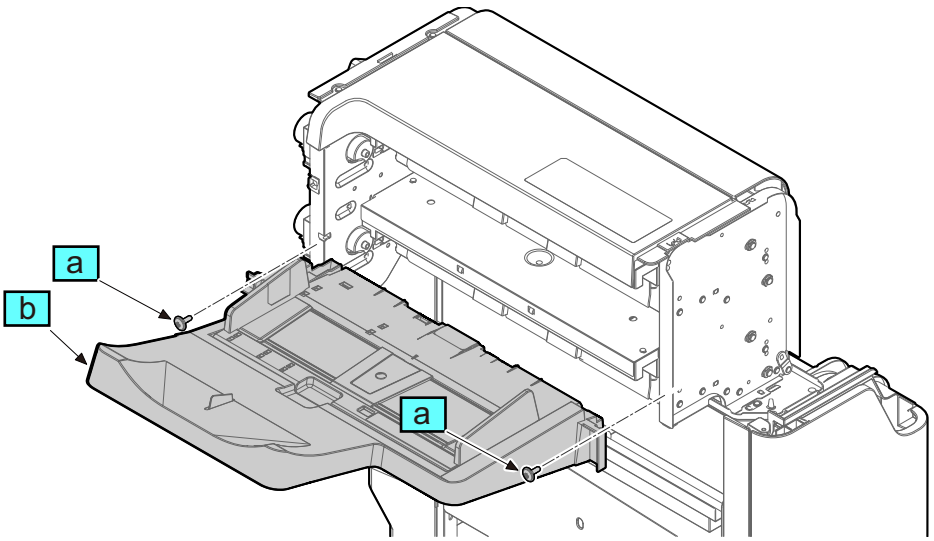

(15-5)IS Upper unit

IMPORTANT

Removing IS upper unit is required before separating the inserter from finisher.

1 Remove 2 screws (a).

2 Remove Rear upper cover (b)

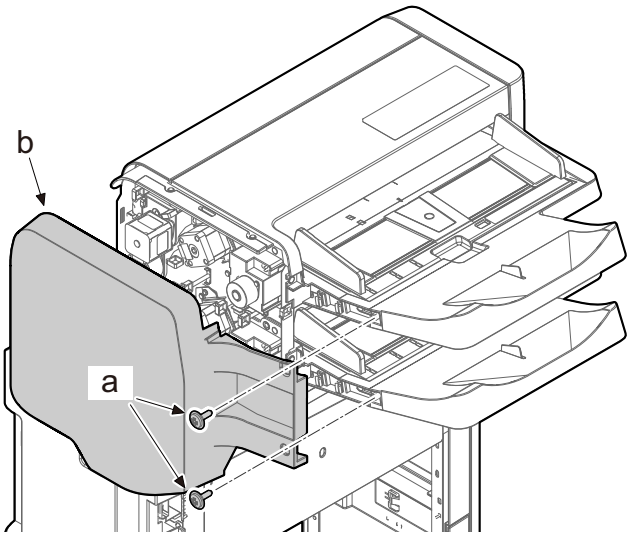

3 Remove 2 screws (a).

4 Remove Rear middle cover (b).

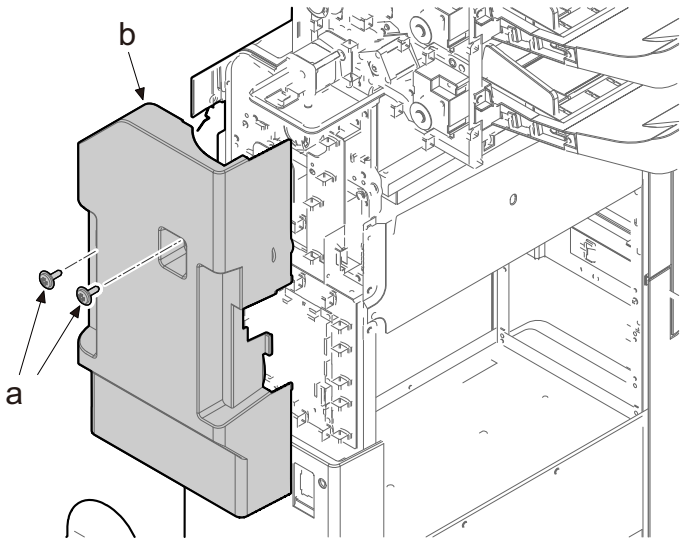

5 Remove 2 screws (a).

6 Remove Right cover (b).

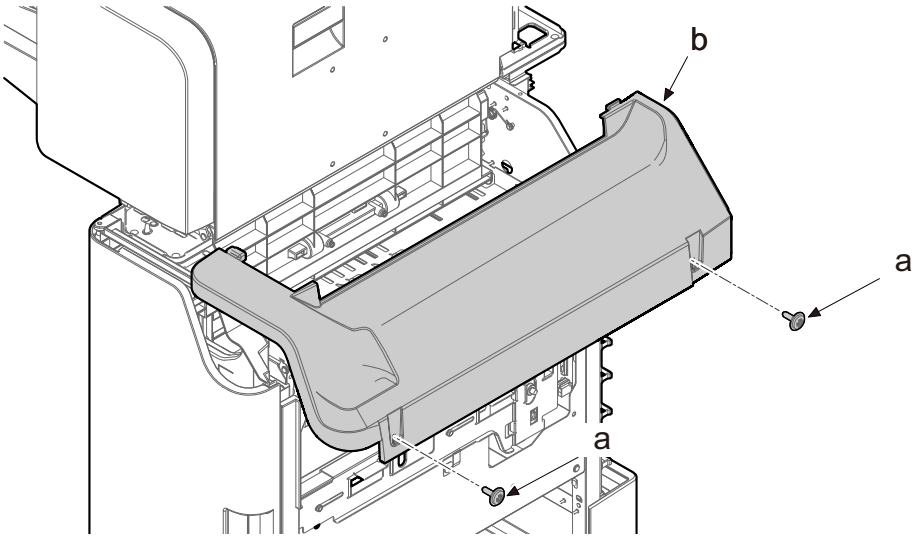

7 Remove screws (a).

8 Remove Front upper cover (b).

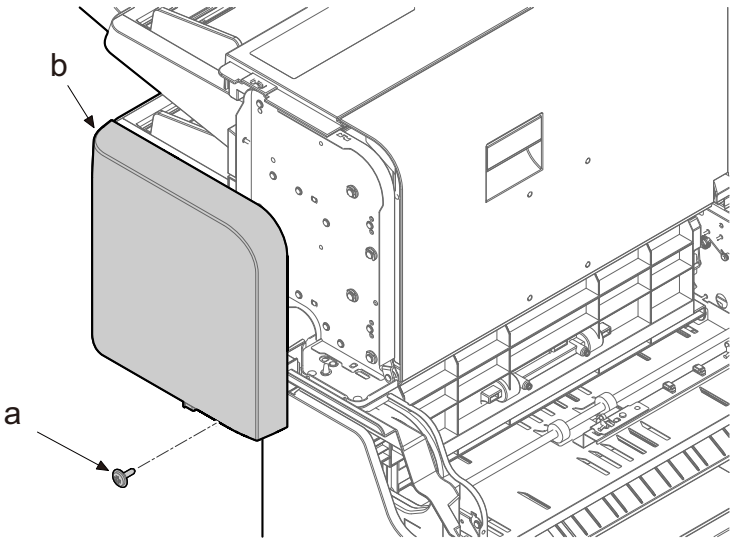

9 Remove 5 connector.

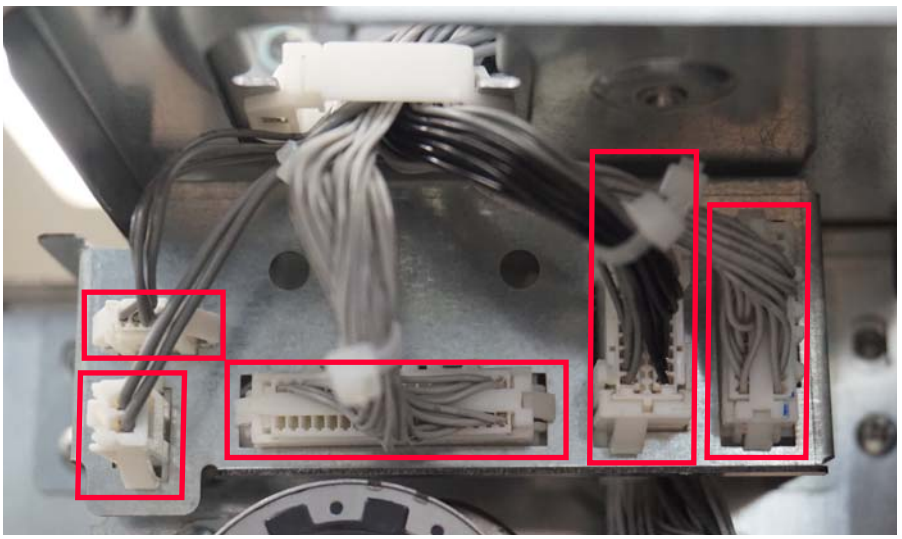

10 Remove 4 screws (a).

11 Remove IS Upper unit (b)

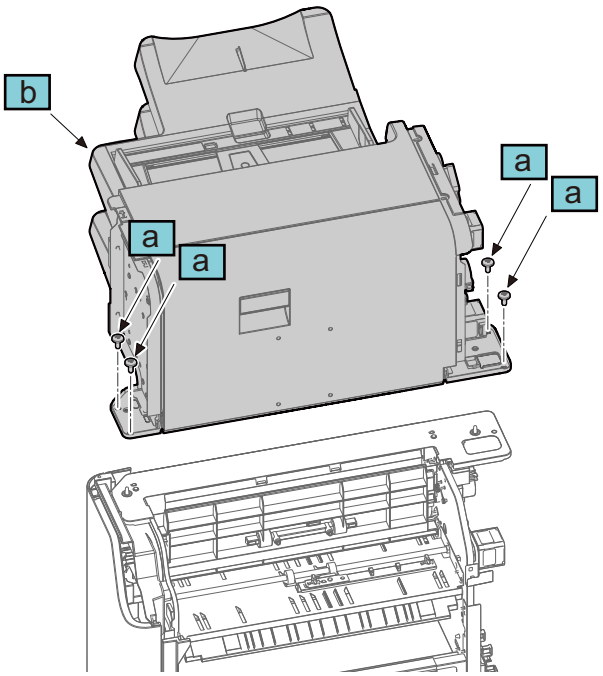

(16)Z-folding unit(ZF-7100)

(16-1)Exterior Covers

CAUTION

Be sure to pull out the casters [A] before working, to prevent falling down this option.

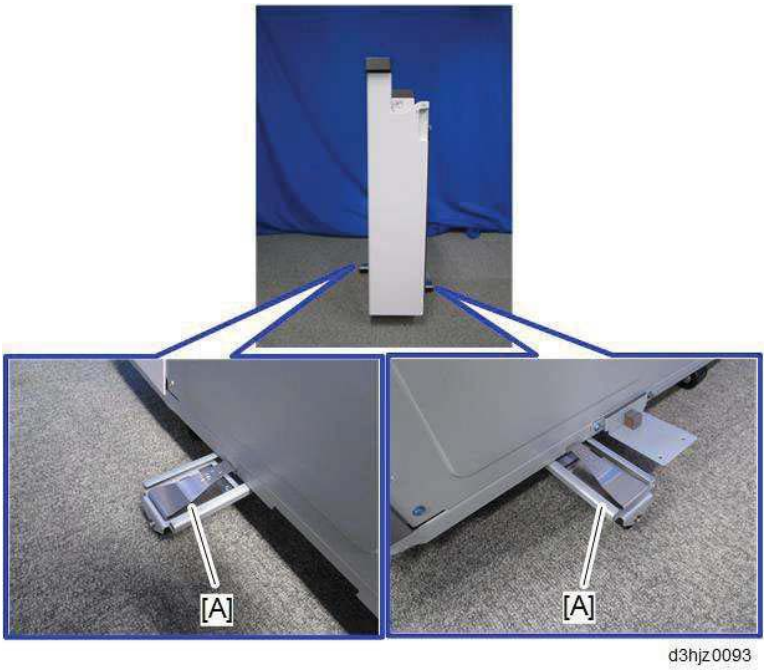

Front Cover

1 Open Front Cover (a)

2 Remove screw (b).

3 Release the hinge (c) and remove Front Cover (a).

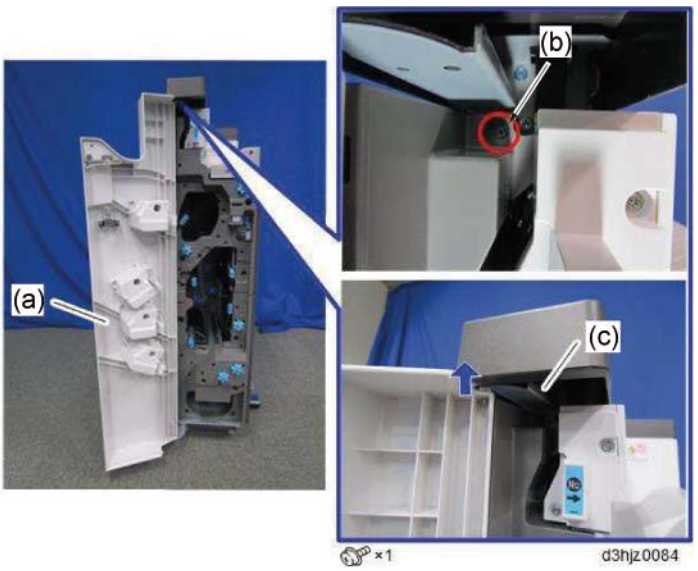

Rear Cover

1 Remove 4 screws (b).

2 Remove the rear cover (a).

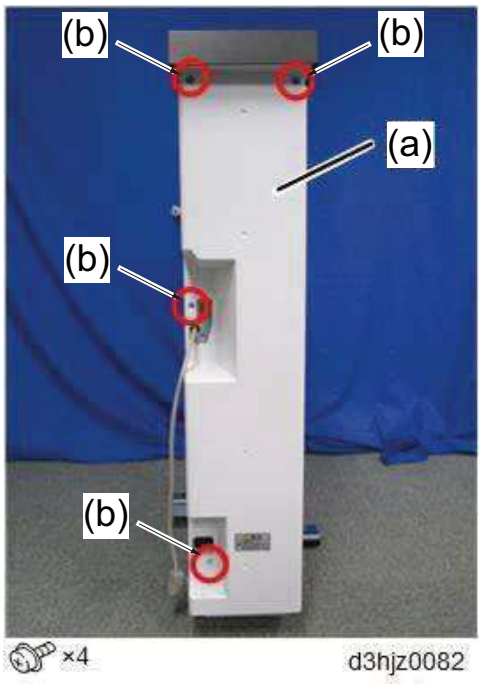

Upper Cover

1 Remove the rear cover.

2 Open the front cover (a).

3 Open the paper exit cover (b) and remove screw (c).

4 Remove screw (d).

5 Remove the upper cover (e).

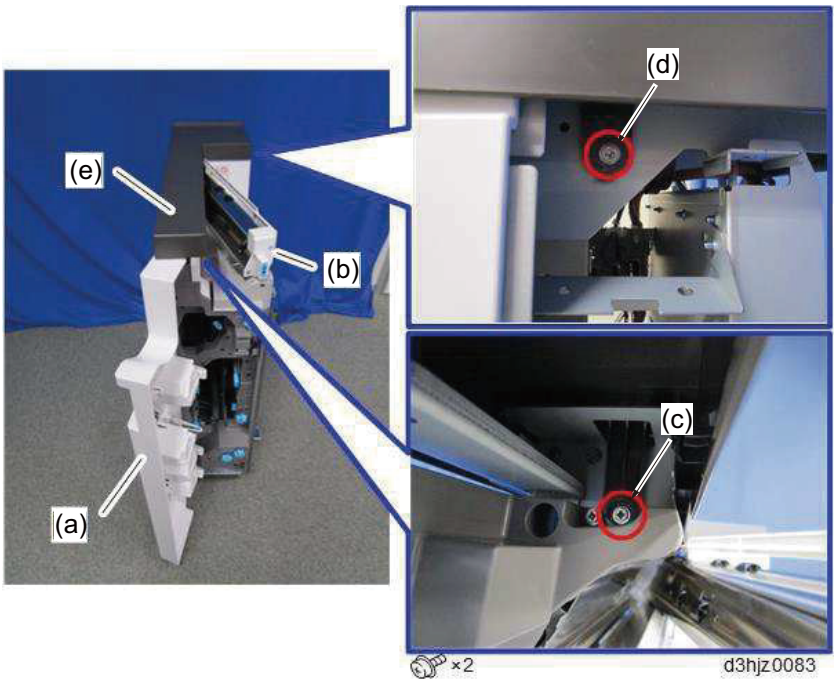

Inner Upper Cover

1 Remove the front cover.

2 Remove 2 stoppers (a) and remove the 2 knobs (b).

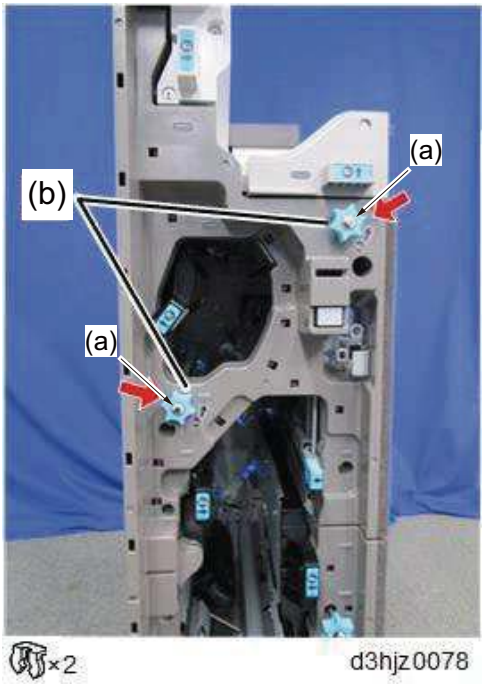

3 Remove 4 screws (a).

4 Open the exit unit (b) and the exit tray (c) then pull out the Inner Upper Cover (d).

5 Remove connector (f) then remove the Inner Upper Cover (d).

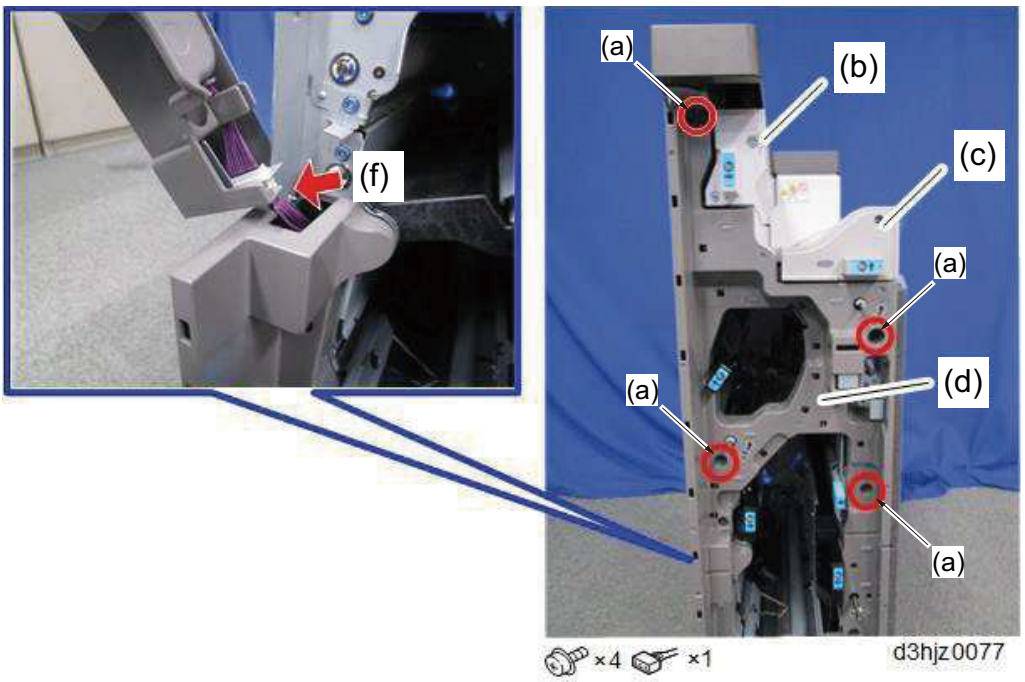

Inner Lower Cover

1 Remove the front cover.

2 Remove the 3 stopring (a) and then remove the 3 knobs (b).

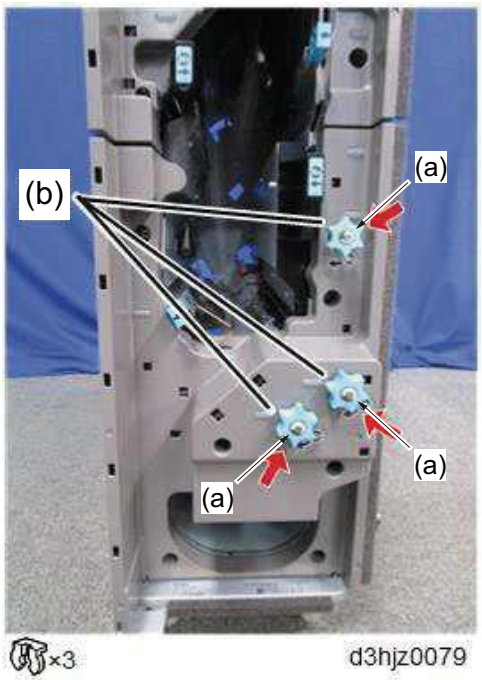

3 Remove 4 screws (a).

4 Remove the connector (b) and then release the clamp (c)

5 Remove the inner lower cover (d).

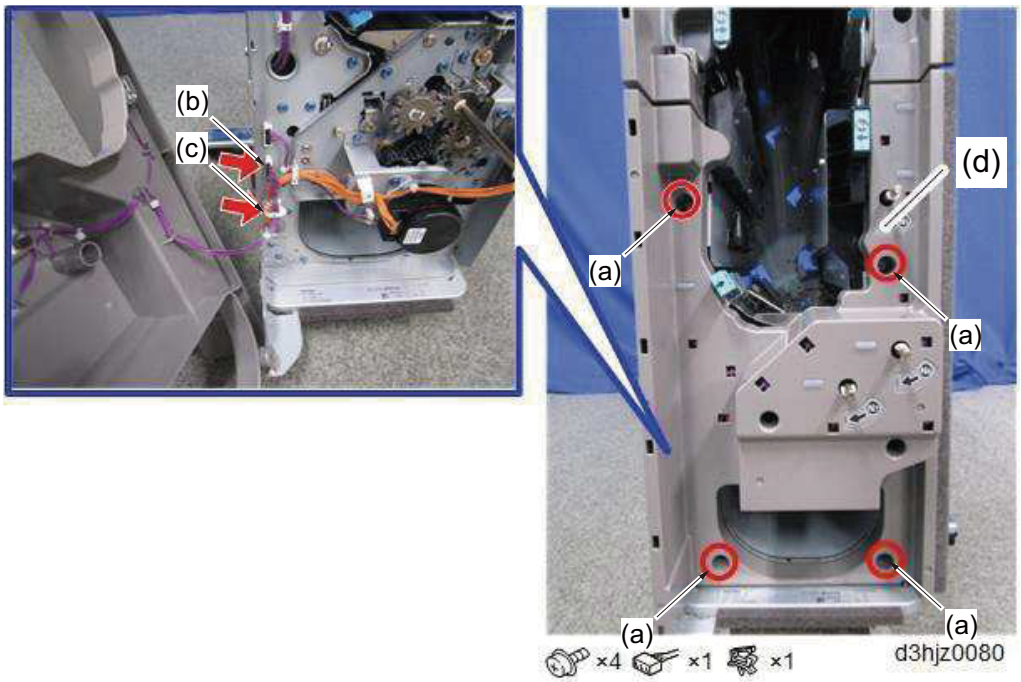

Left Cover

1 Remove 4 screws (a).

2 Remove the left upper cover (b).

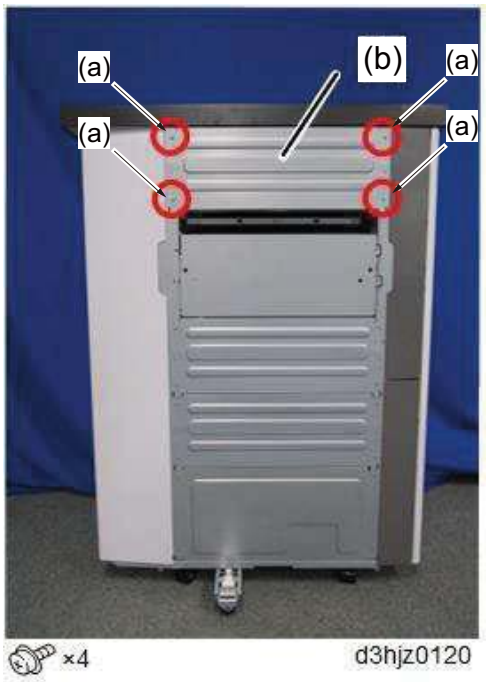

3 Remove 4 screws (a).

4 Remove the left mid upper cover (b).

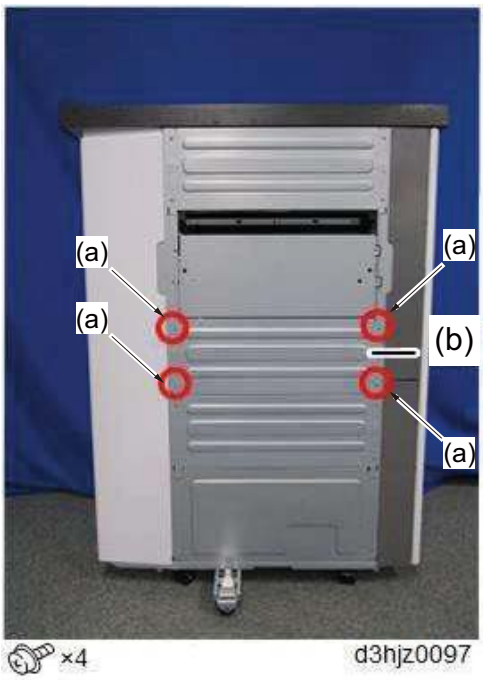

5 Remove 4 screws (a).

6 Remove the left mid lower cover (b).

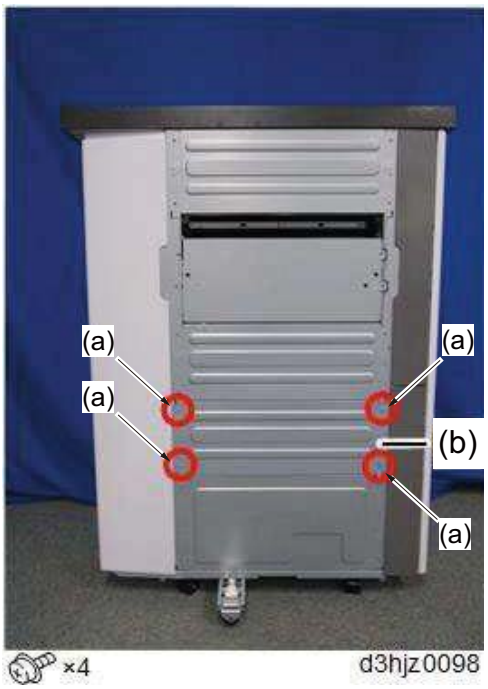

7 Remove 4 screws (a).

8 Remove the left mid lower cover (b).

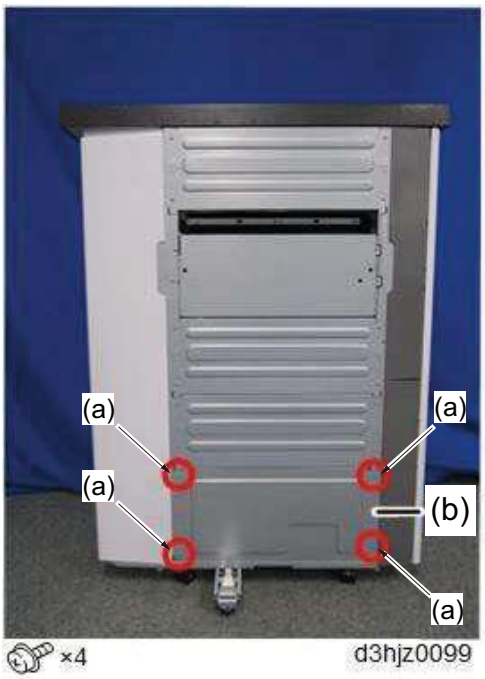

Left Bracket

1 Remove the front cover.

2 Remove the rear cover.

3 Remove the inner upper cover.

4 Remove 5 screws (a).

5 Remove the left bracket (b).

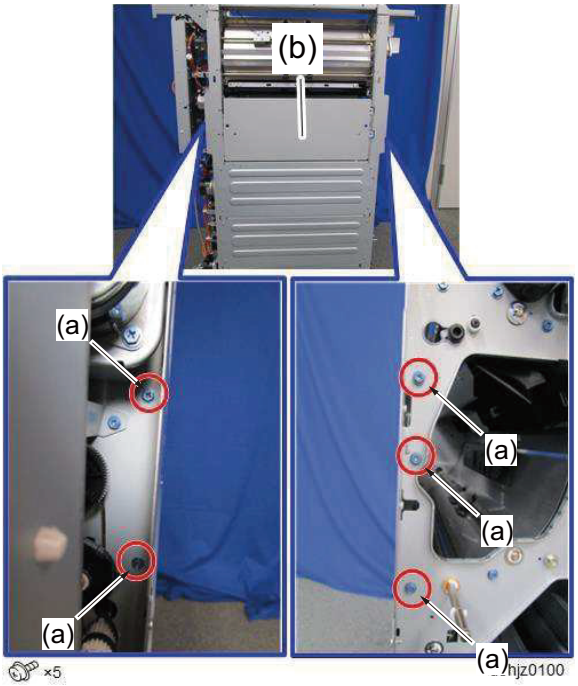

Right Covers

1 Remove 2 screws (a).

2 Remove the right upper cover(b).

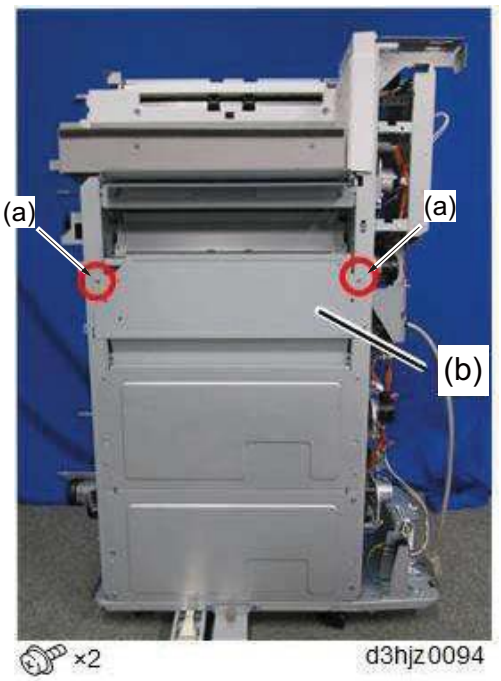

3 Remove 4 screws (a).

4 Remove the right mid cover (b).

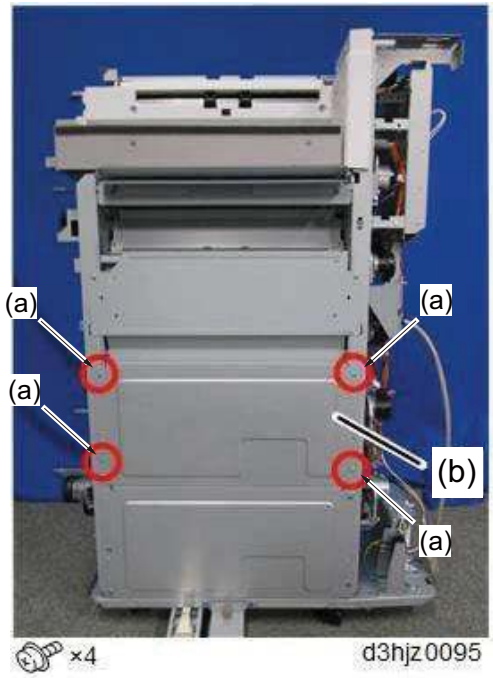

5 Remove 4 screws (a).

6 Remove the right lower cover(b).

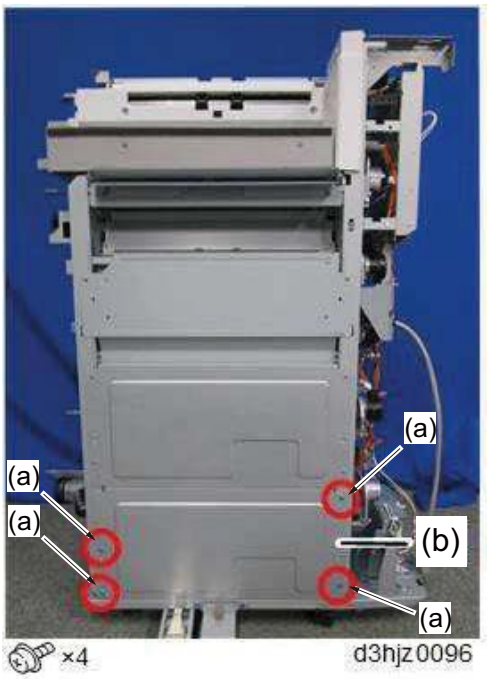

Tray Rear Cover

1 Remove the rear cover.

2 Remove the upper cover.

3 Remove 2 screws (a).

4 Remove the tray rear cover (b).

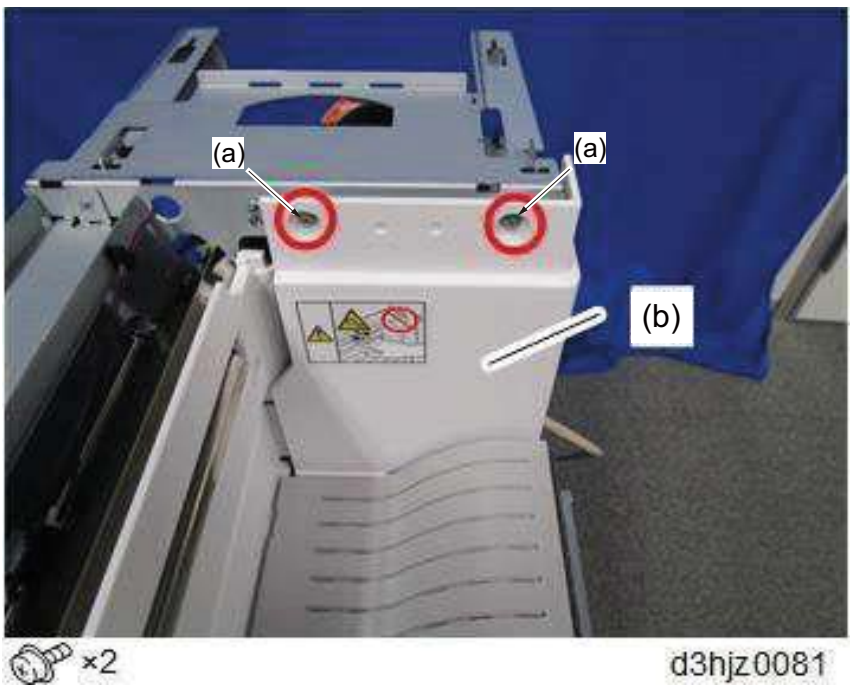

Paper Exit Cover

1 Open Front Cover (a).

2 Remove 4 screws (b).

3 Remove the paper exit cover (c).

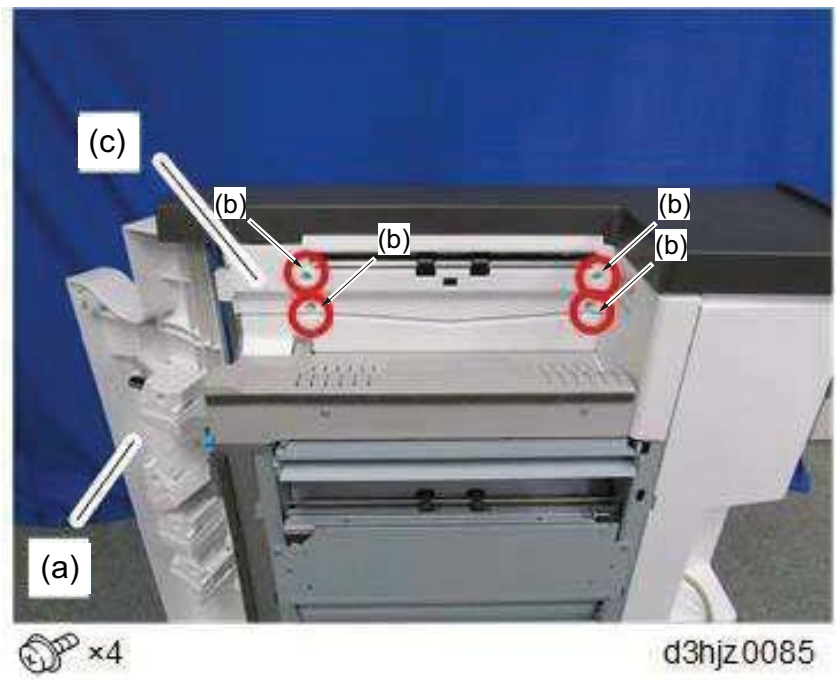

Paper Exit Unit / Paper Exit Tray Lower Cover

1 Remove the rear cover.

2 Remove the upper cover.

3 Remove the tray rear cover.

4 Remove 6 screws (a).

5 Remove the main board (b) with its bracket.

6 Remove the connector (c).

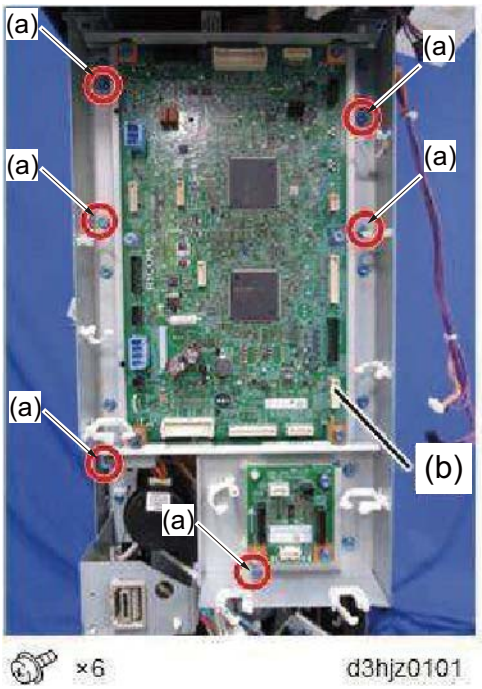

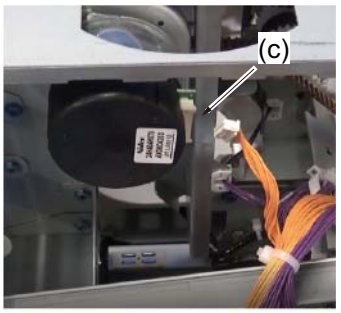

7 Remove the connector (a) and then release the clamp (b).

8 Remove the clip ring(c).

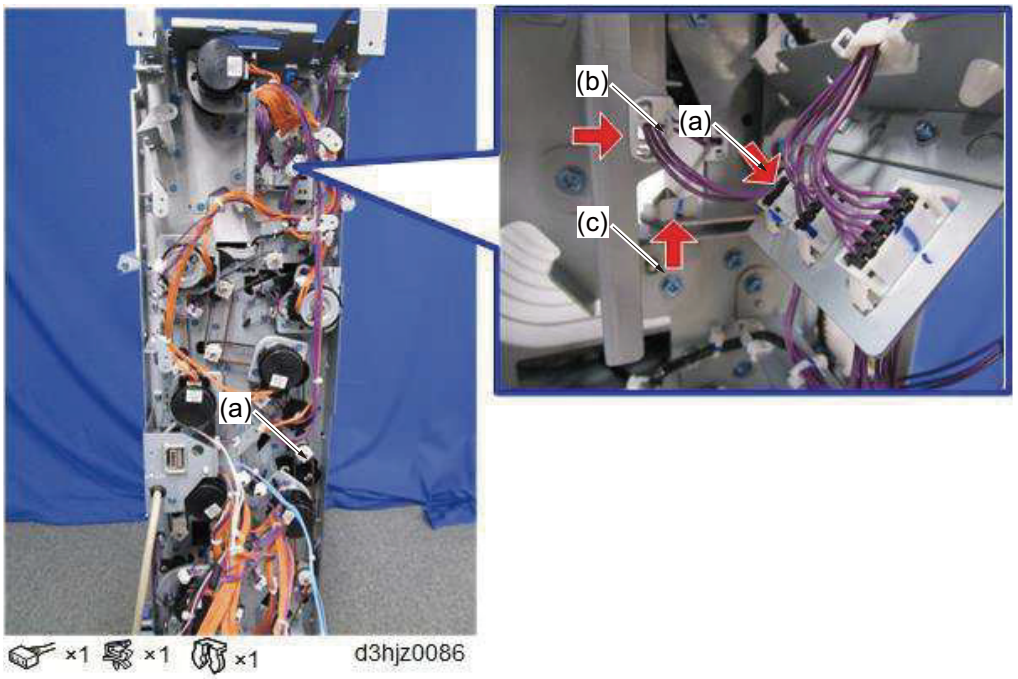

9 Open the paper exit unit [A] and remove it toward upper side.

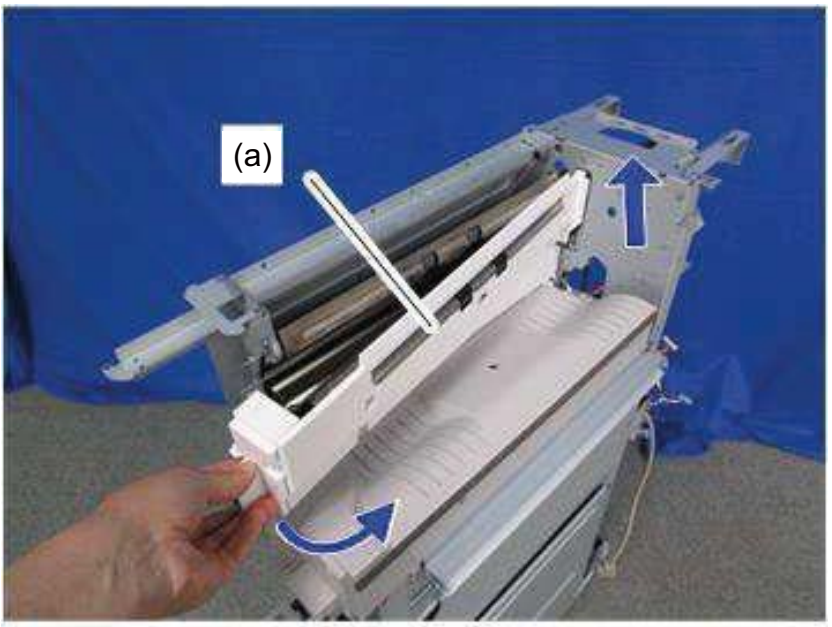

d3hjz0087

10 Remove 2 screws (a).

11 Paper exit tray lower cover (b).

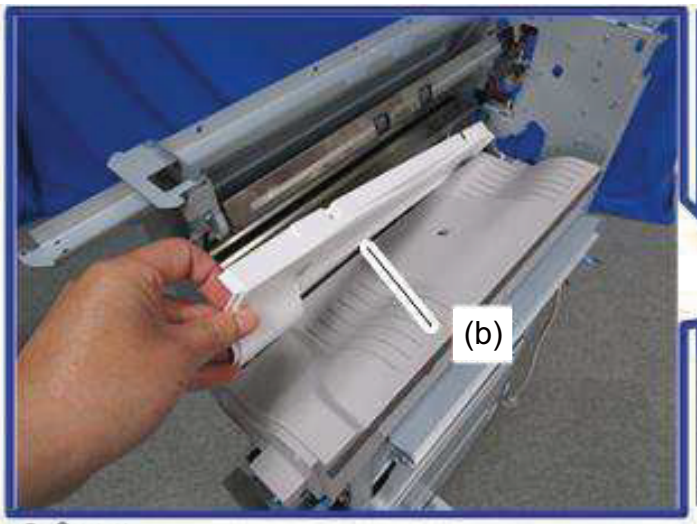

×2

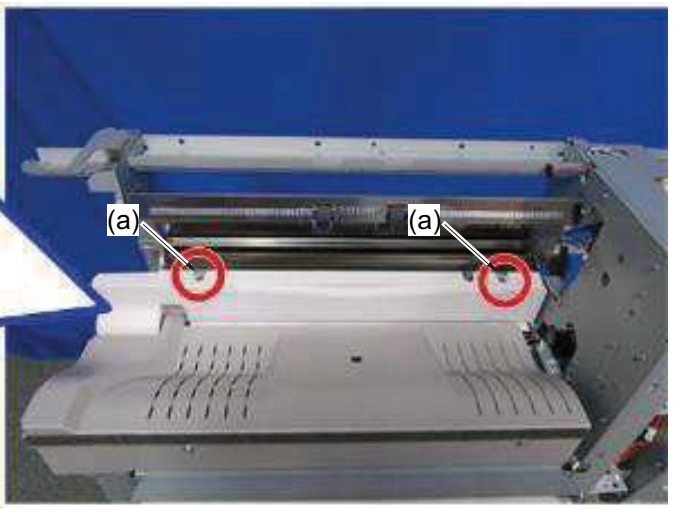

d3hjz0090

Paper Exit Tray

1 Remove 2 screws (a).

2 Open the paper exit tray.

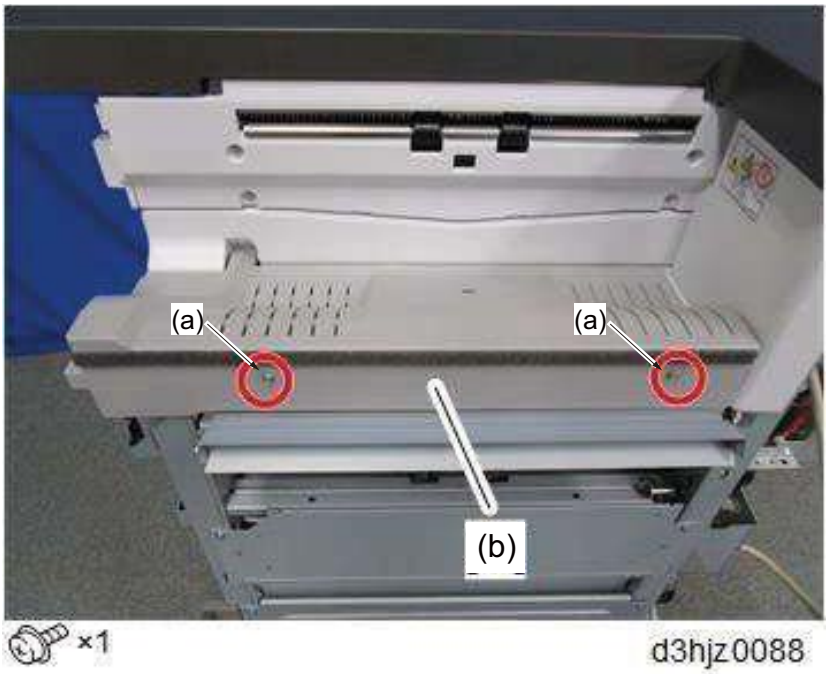

3 Remove the connector (a).

4 Release the clamp (b).

5 Remove the paper exit tray.

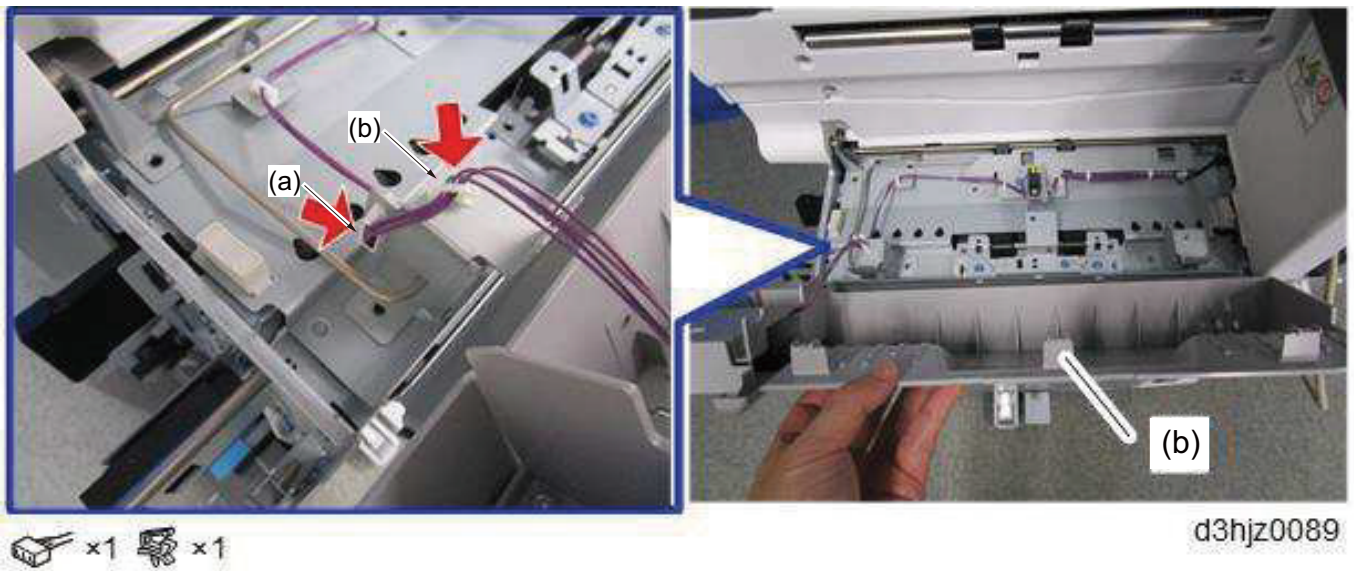

(16-2)Motor

> **CAUTION**
>
> When replacing the motors, be sure to set the connector flame barrier firmly. Otherwise, motors may ignite due to heat generated.

Registration Motor

1 Remove the rear cover.

2 Remove the flameproof barrier (a).

3 Remove the connector (b).

4 Remove 2 screws (c).

5 Remove the Registration Motor (d).

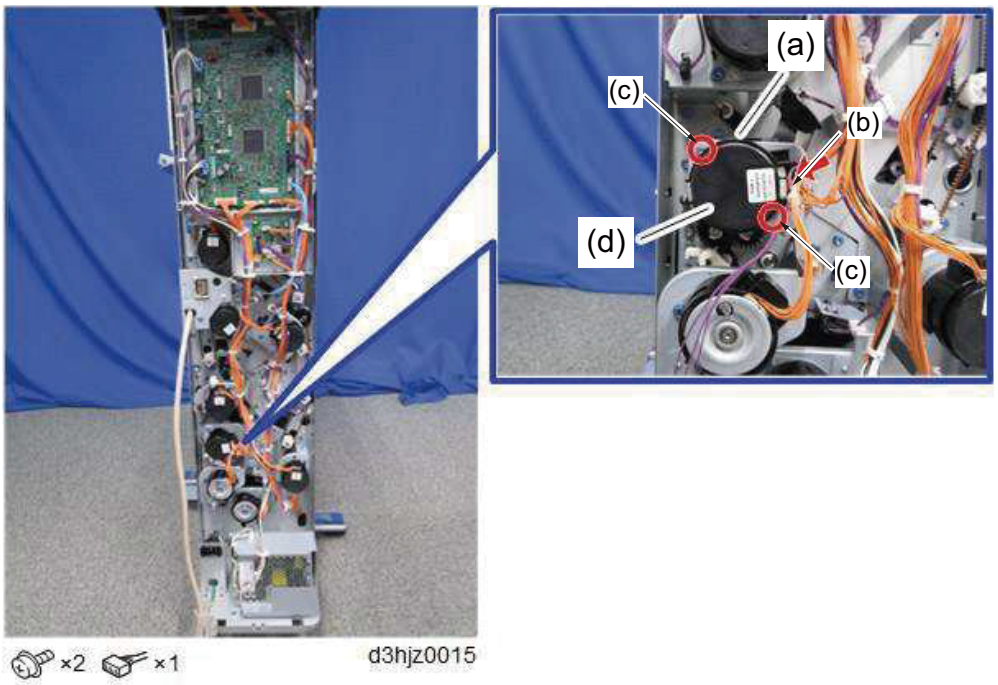

Pre-registration Motor

1 Remove the rear cover.

2 Remove the flameproof barrier (a).

3 Remove the connector (b).

4 Remove 2 screws (c) and then remove the Pre-registration Motor (d).

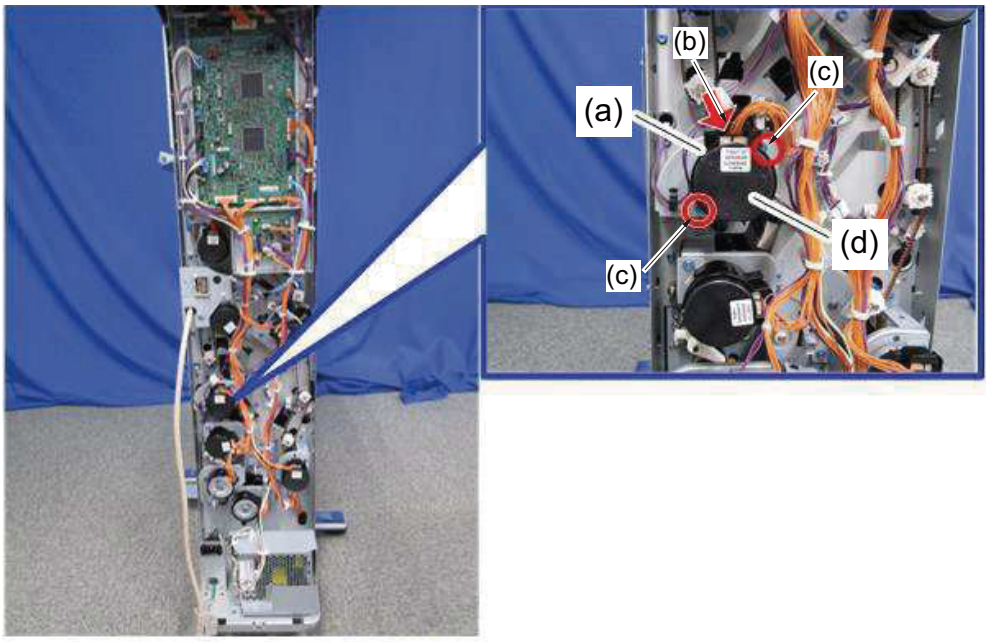

Anti-winding Motor

1 Remove the rear cover.

2 Remove the PSU.

3 Remove the flameproof barrier (a).

4 Remove the connector (b).

5 Remove 2 screws (c) and then remove the Anti-winding Motor.

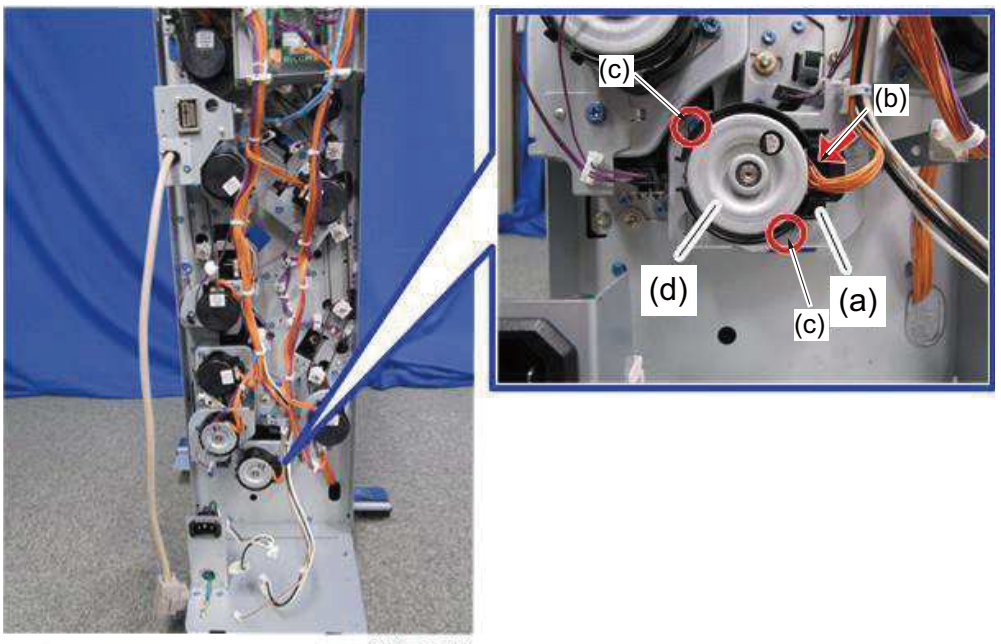

Folding Motor

1 Remove the front cover.

2 Remove the inner lower cover.

3 Remove the flameproof barrier (a).

4 Remove the connector (b).

5 Remove 2 screws (c).

6 Remove the Folding Motor (d).

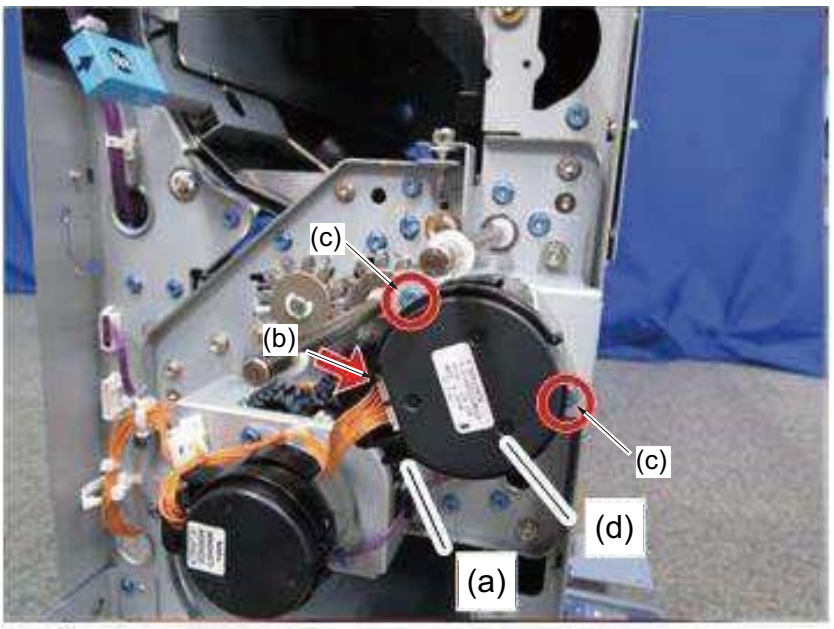

Paper Exit Tray Motor

1 Remove the rear cover.

2 Remove the main PWB and IO PWB1 with its bracket.

3 Remove the flameproof barrier (a).

4 Remove the connector (b).

5 Remove 2 screws (c).

6 Remove the Paper Exit Tray Motor (d).

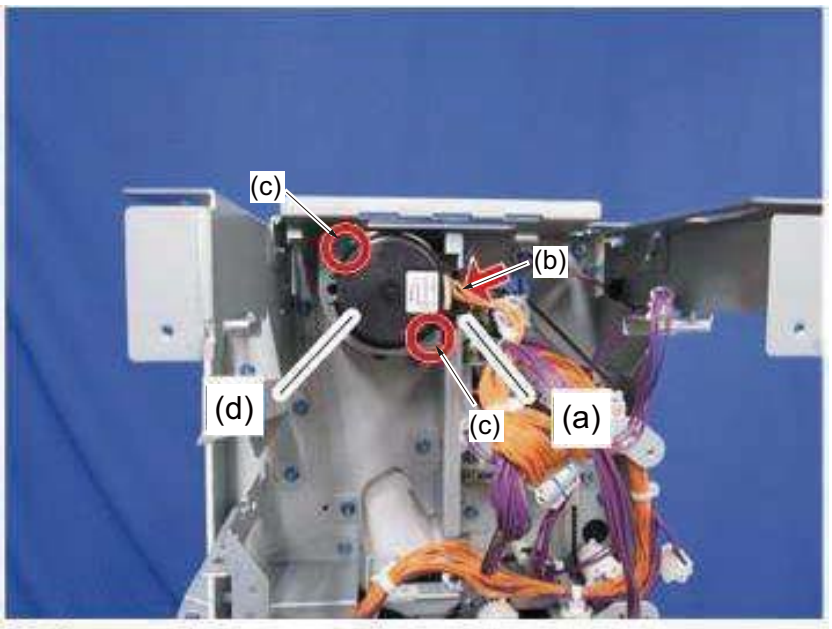

Folding JG Motor

1 Remove the rear cover.

2 Remove the flameproof barrier (a).

3 Remove the connector (b).

4 Remove 2 screws (c).

5 remove the Folding JG Motor (d).

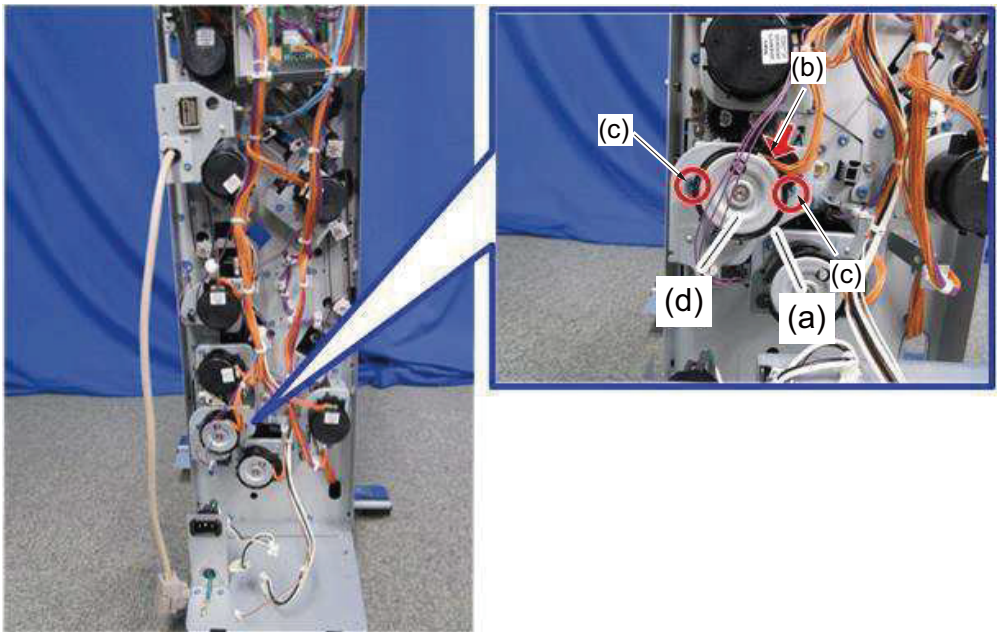

Crease Motor

1 Remove the rear cover.

2 Remove the flameproof barrier (a).

3 Remove the connector (b).

4 Remove 2 screws (c).

5 Remove the Crease Motor (d).

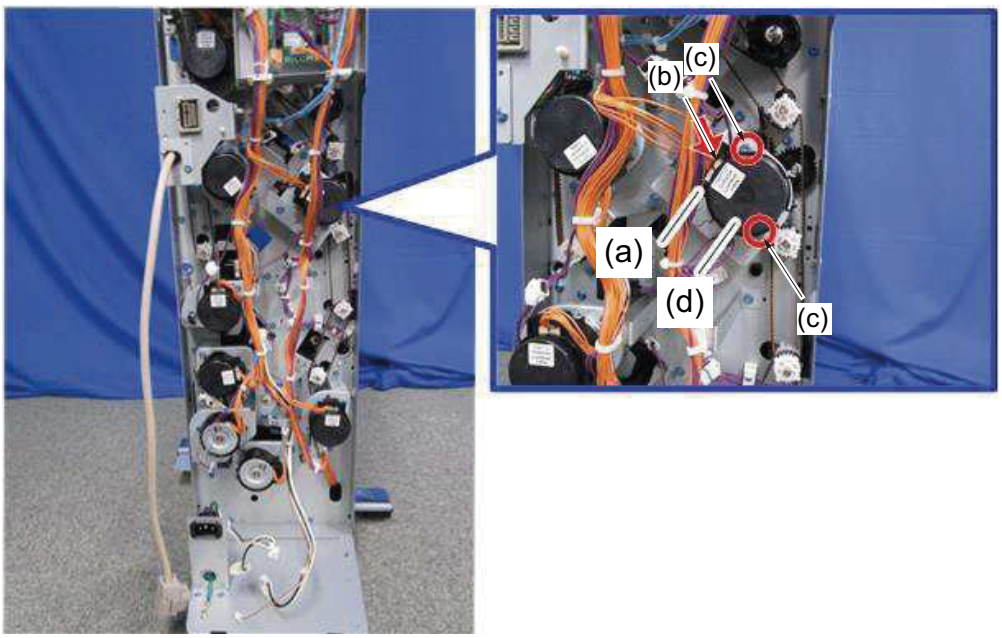

Paper Transport Motor 1

1 Remove the rear cover.

2 Remove the flameproof barrier (A).

3 Remove the connector (b).

4 Remove 2 screws (c).

5 Remove the Paper Transport Motor 1 (B).

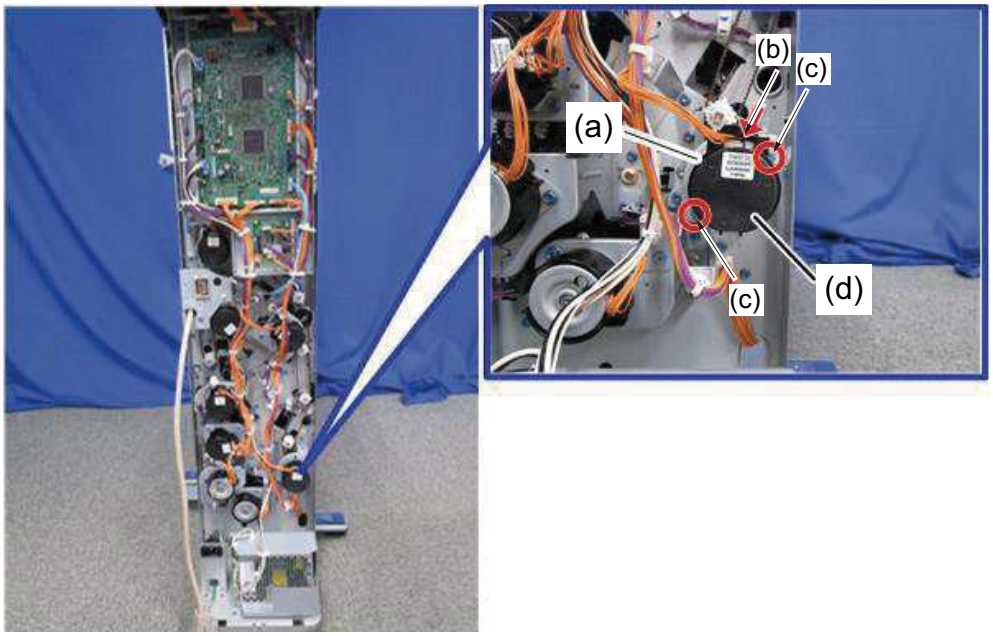

FWD/RVS Motor 2

1 Remove the front cover.

2 Remove the inner lower cover.

3 Remove the flameproof barrier (A).

4 Remove the connector (b).

5 Release the clamp (c).

6 Remove 2 screws (d).

7 Remove the FWD/RVS Motor (e).

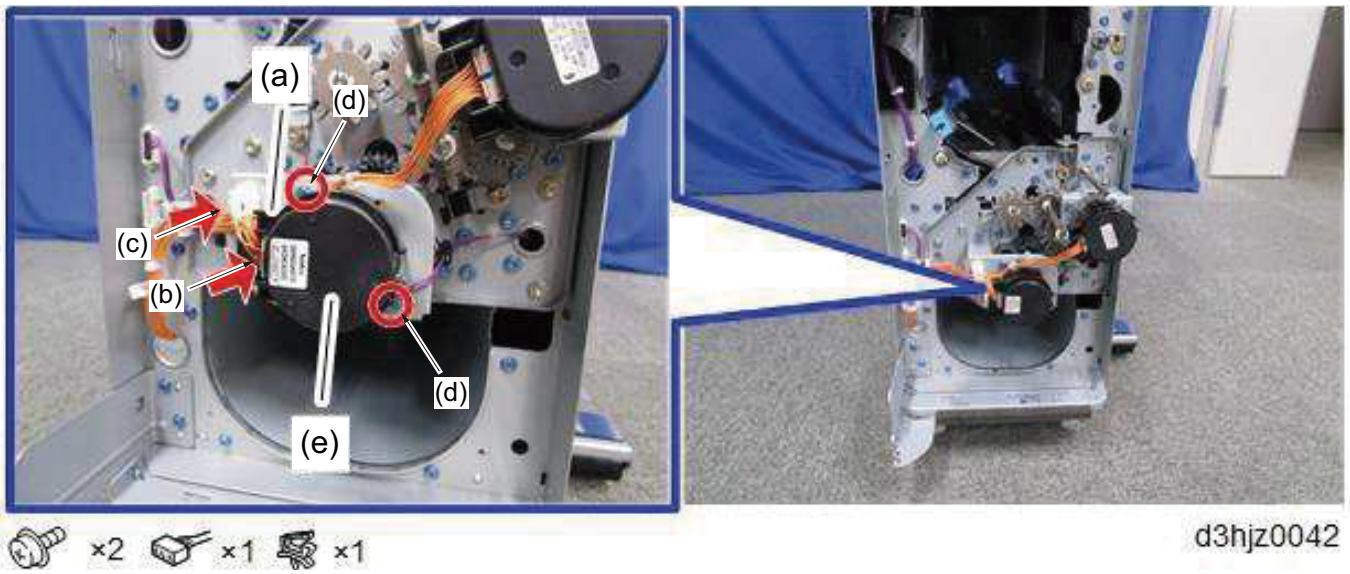

Paper Transport Motor 2

1 Remove the rear cover.

2 Remove the flameproof barrier (a).

3 Remove the connector (b).

4 Remove 2 screws (c).

5 Remove the Paper Transport Motor 2 (d).

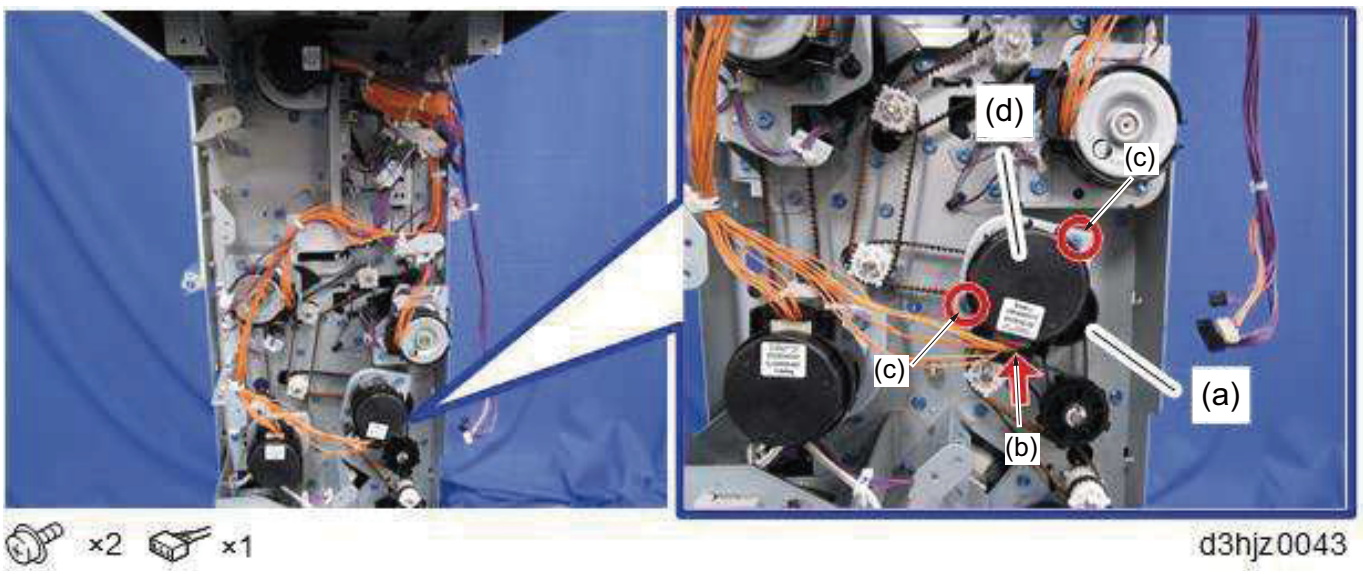

Paper Entrance Motor

1 Remove the rear cover.

2 Remove the flameproof barrier (a).

3 Remove the connector (b).

4 Remove 2 screws (c).

5 Remove the Paper Entrance Motor(d).

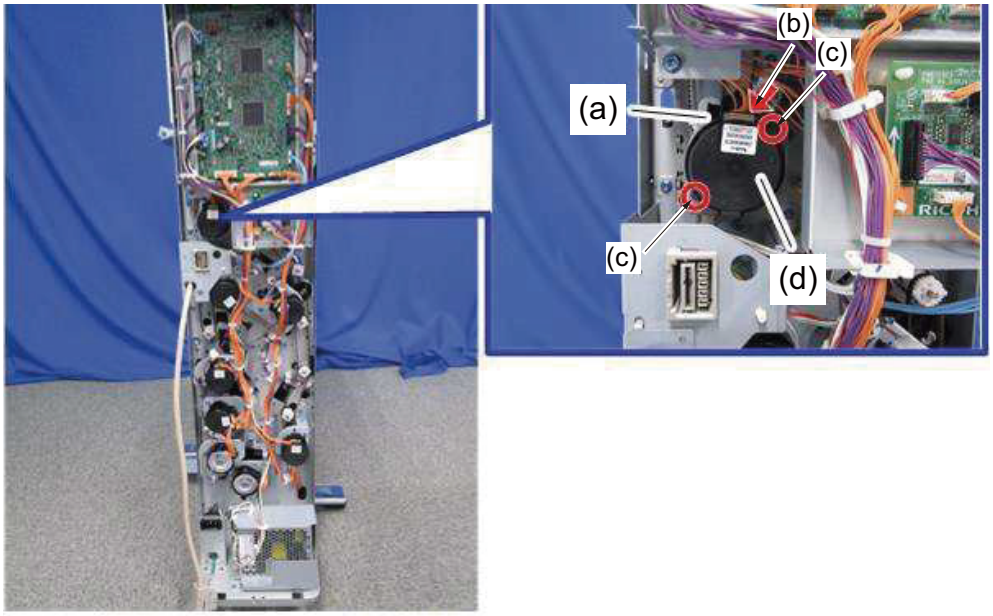

Entrance JG Motor

1 Remove the rear cover.

2 Remove the main PWB and IO PWB1 with its bracket.

3 Remove the flameproof barrier (a).

4 Remove the connector (b).

5 Remove 2 screws (c).

6 Remove the Entrance JG Motor (d).

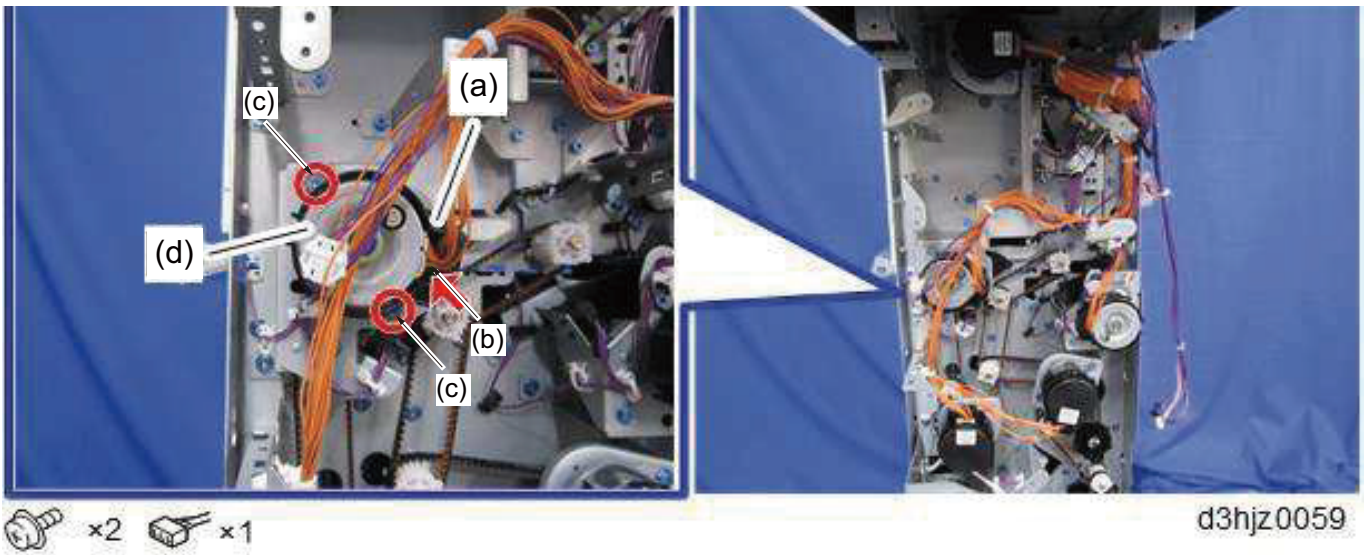

For removing the entrance JG motor with its bracket:

1 Remove the flameproof barrier (a).

2 Remove the connector (b).

3 Release the clamp (c).

4 Remove 2 screws (d).

5 Remove the entrance JG motor (e) with its bracket (e).

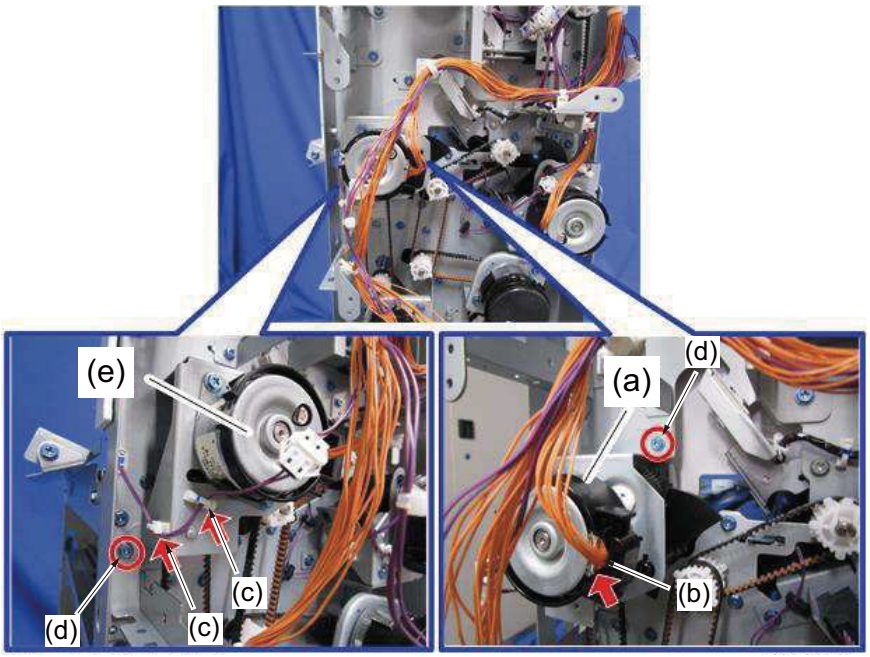

Paper Exit JG Motor

1 Remove the rear cover.

2 Remove the main PWB and IO PWB1 with its bracket.

3 Remove the flameproof barrier (a).

4 Remove the connector (b).

5 Remove 2 screws (c).

6 Paper Exit JG Motor (d).

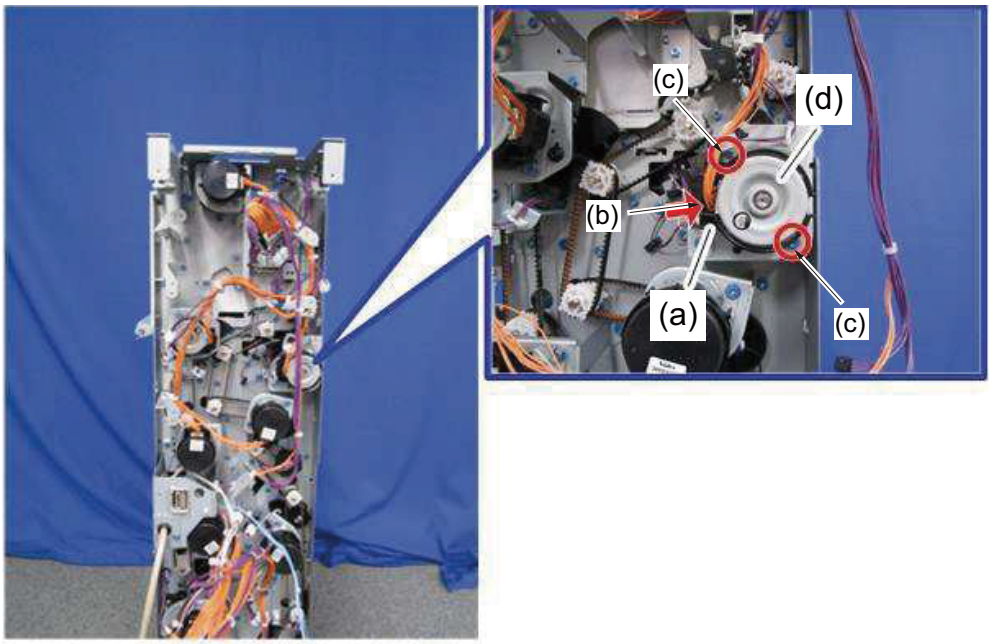

Paper Stack Motor

1 Remove the rear cover.

2 Remove the flameproof barrier (a).

3 Remove the connector (b).

4 Remove 2 screws (c).

5 Paper Stack Motor (d).

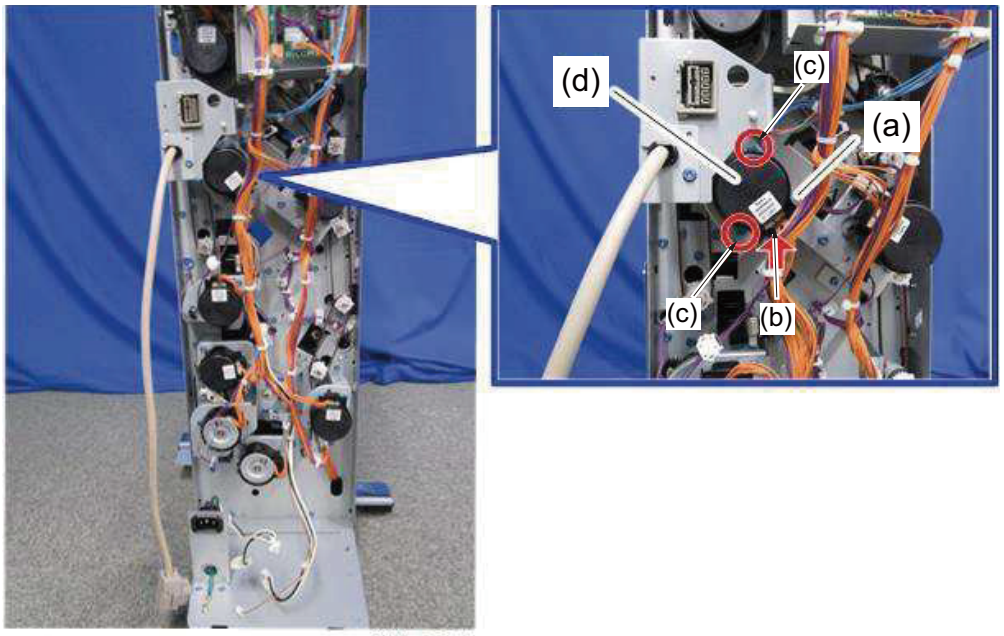

(16-3)Electrical equipment

ZF IO PWB1

1 Remove the rear cover.

2 Connect the earth band to the machine frame.

3 Remove the 5 connectors (a).

4 Remove 2 screws (b).

5 Release the 2 board supports (c) and then remove the ZF IO PWB1 (d).

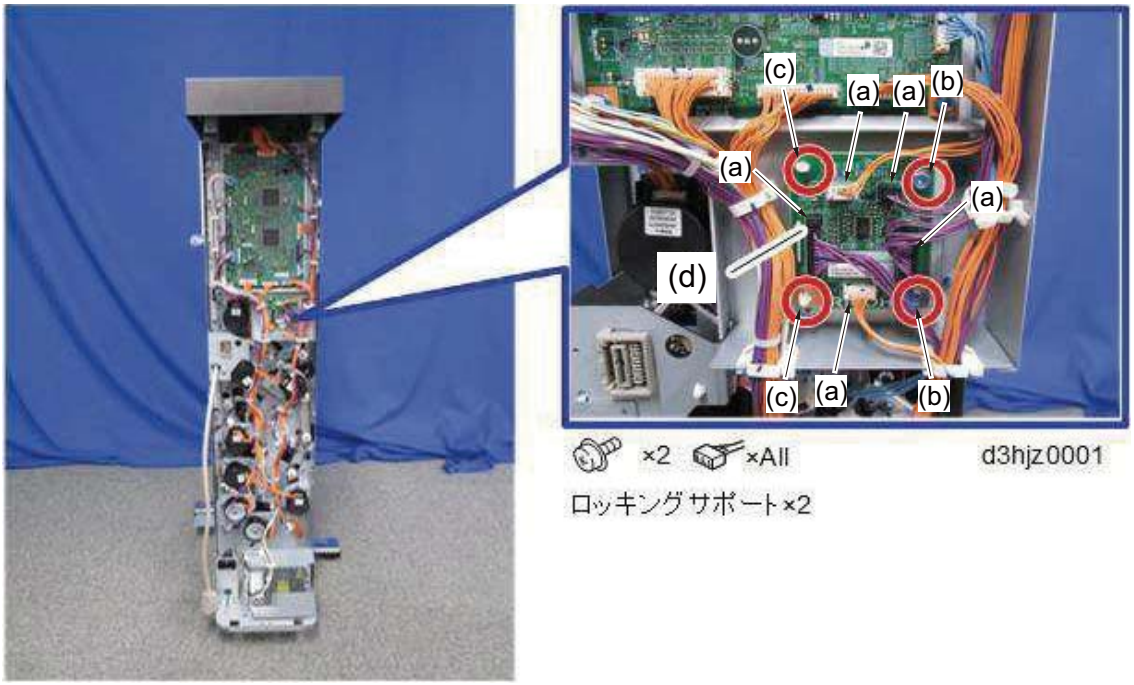

ZF IO PWB2

1 Remove the left lower cover.

2 Connect the earth band to the machine frame.

3 Remove the 4 connectors (a).

4 Remove 2 screws (b).

5 Release the 2 board supports (c) and then remove the ZF IO PWB2 (d).

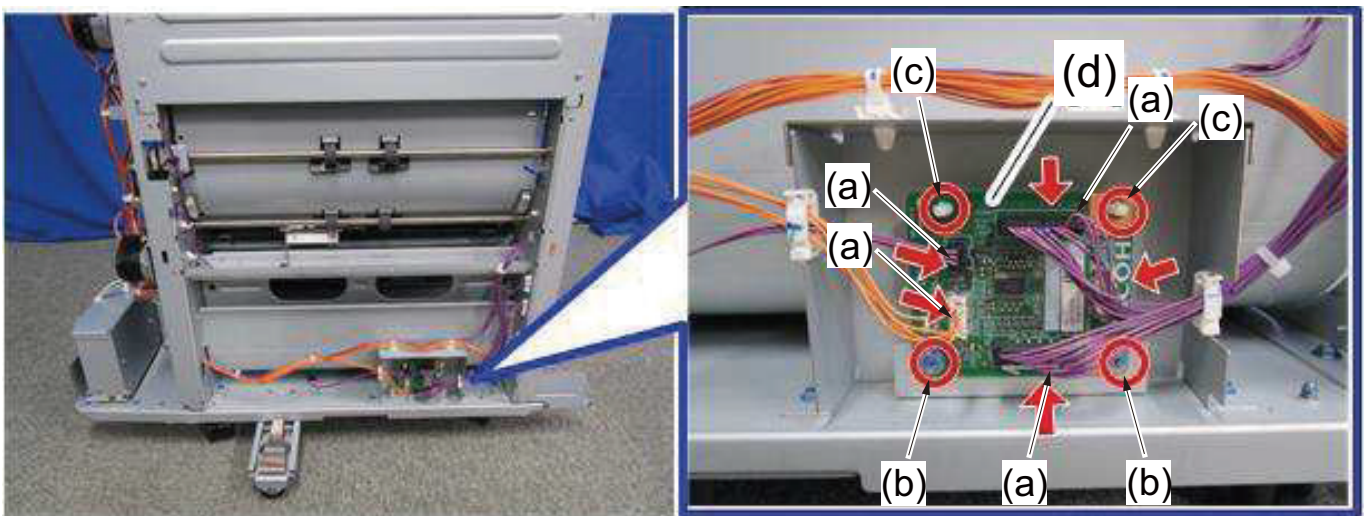

ZF PSU

1 Remove the rear cover.

2 Remove the 6 connectors (a).

3 Release the 3 clamps (b).

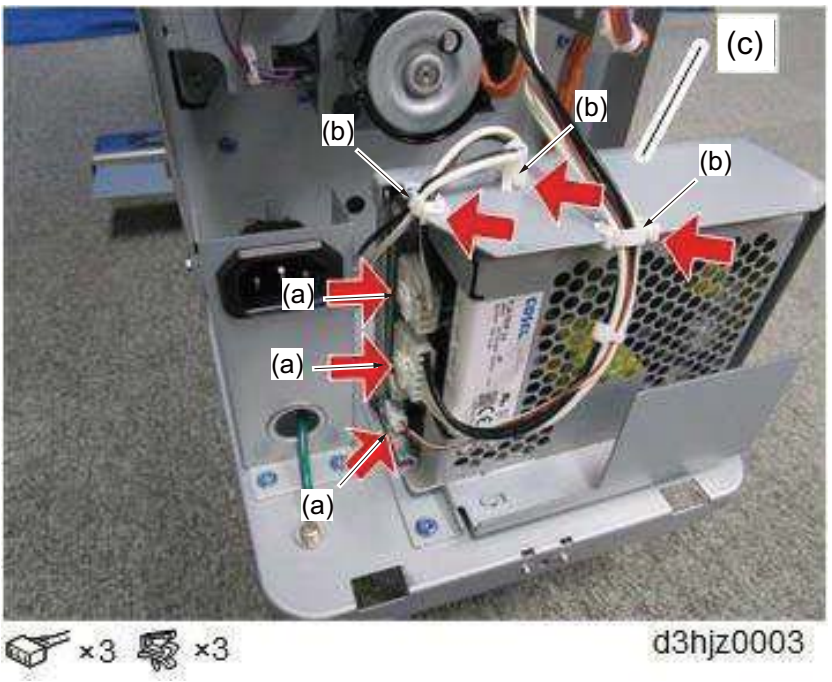

4 Remove 4 screws (a).

5 Remove the ZF PSU (b) with its bracket.

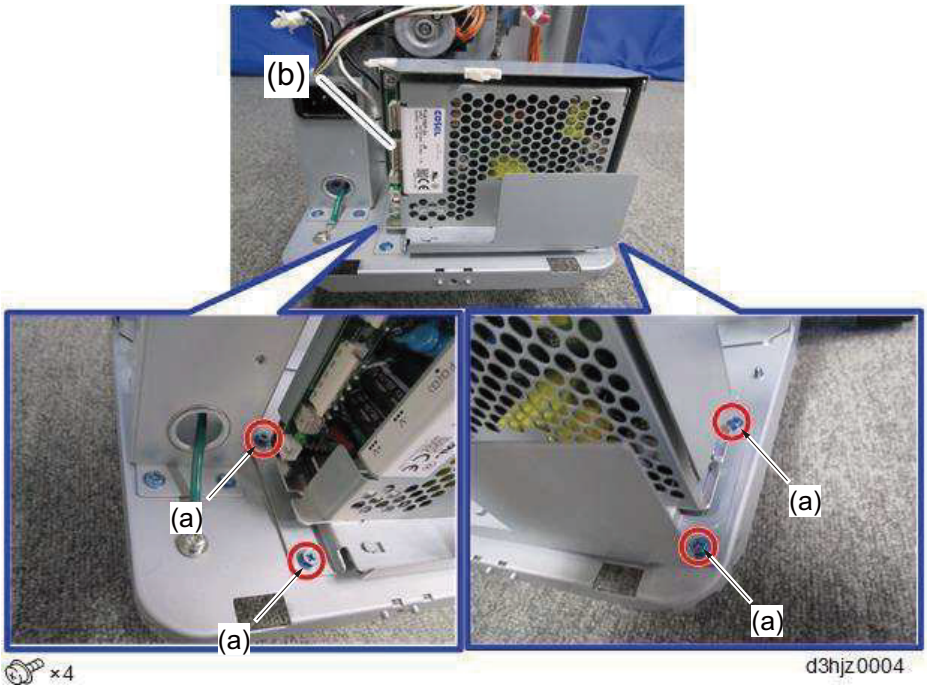

6 Remove 4 screws (a).

7 Remove the ZF PSU (b) from the bracket (c).

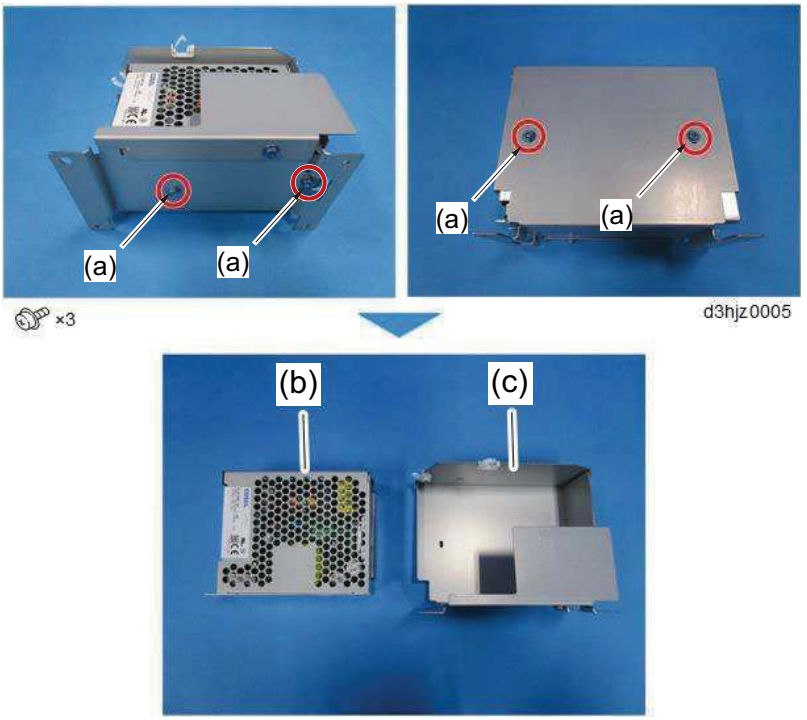

ZF PWB

1 Remove the rear cover.

2 Connect the earth band to the machine frame.

3 Remove the all connectors.

4 Remove 6 screws (a).

5 Remove the ZF PWB (b)

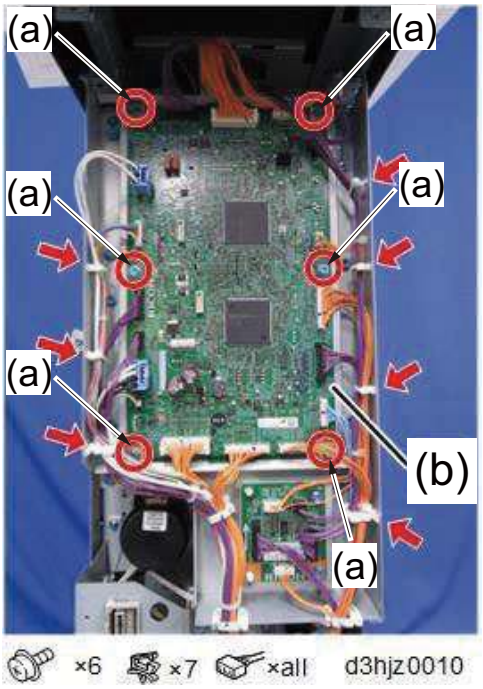

Adjustment after Replacement

Set the adjustment values after replacing the main controller board using SP mode. Each adjustment value is described on the lower front frame (A).

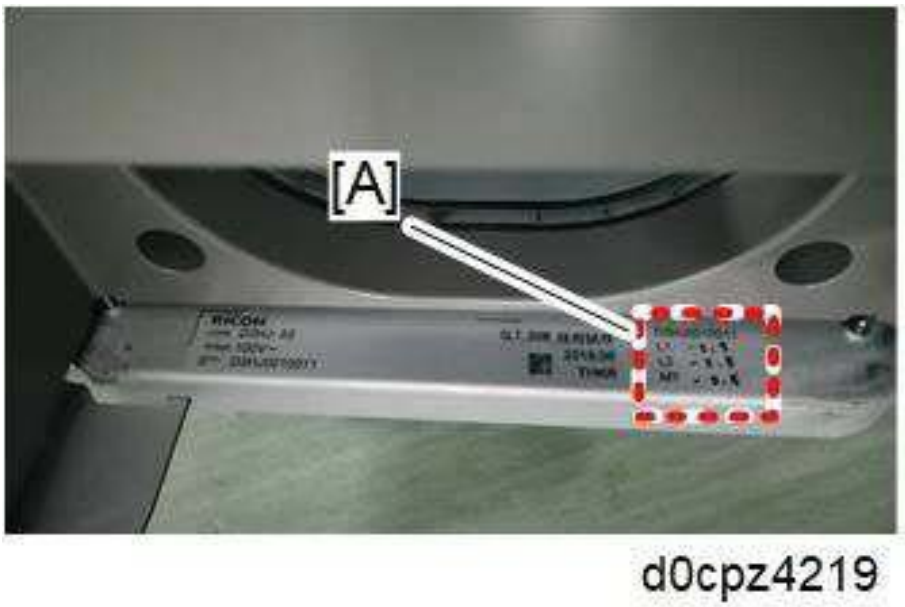

- U246 / 08 NV Adj Data / 01(1st Fold Pos. Factory Setting)
- U246 / 08 NV Adj Data / 02(2nd Fold Pos. Factory Setting)
- U246 / 08 NV Adj Data / 03(Crease Pos. Factory Setting)

ZF PWB unit

1 Remove the rear cover.

2 Remove the all connectors.

3 Release the all clamps.

4 Remove 6 screws (a).

5 remove the ZF PWB unit (b).

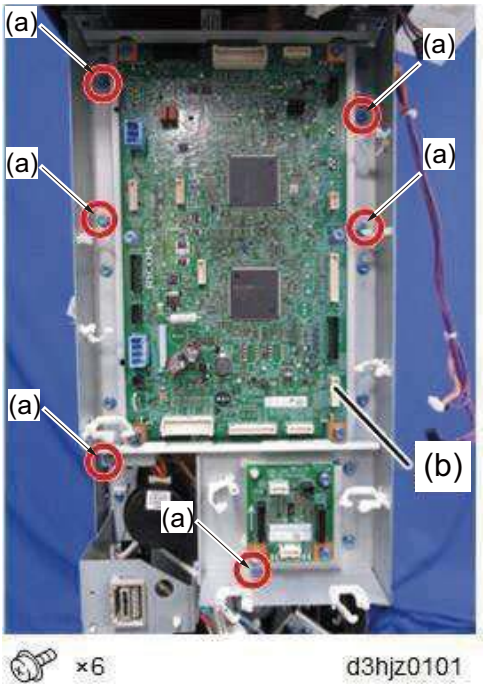

Folding Unit

1 Remove the front cover.

2 Remove the inner lower cover.

3 Remove the rear cover.

4 Remove the motors (b), connectors (c) and screw (d) on the rear side (a) of the folding unit.

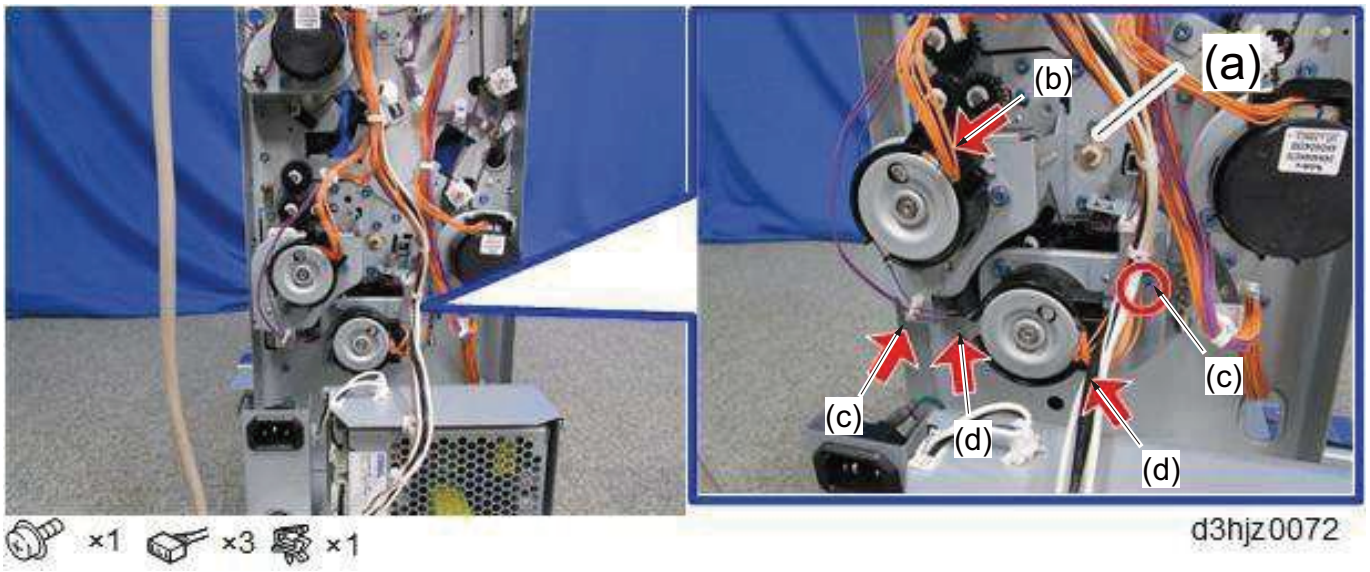

5 Remove the stop clip (a) and then remove the gear (b).

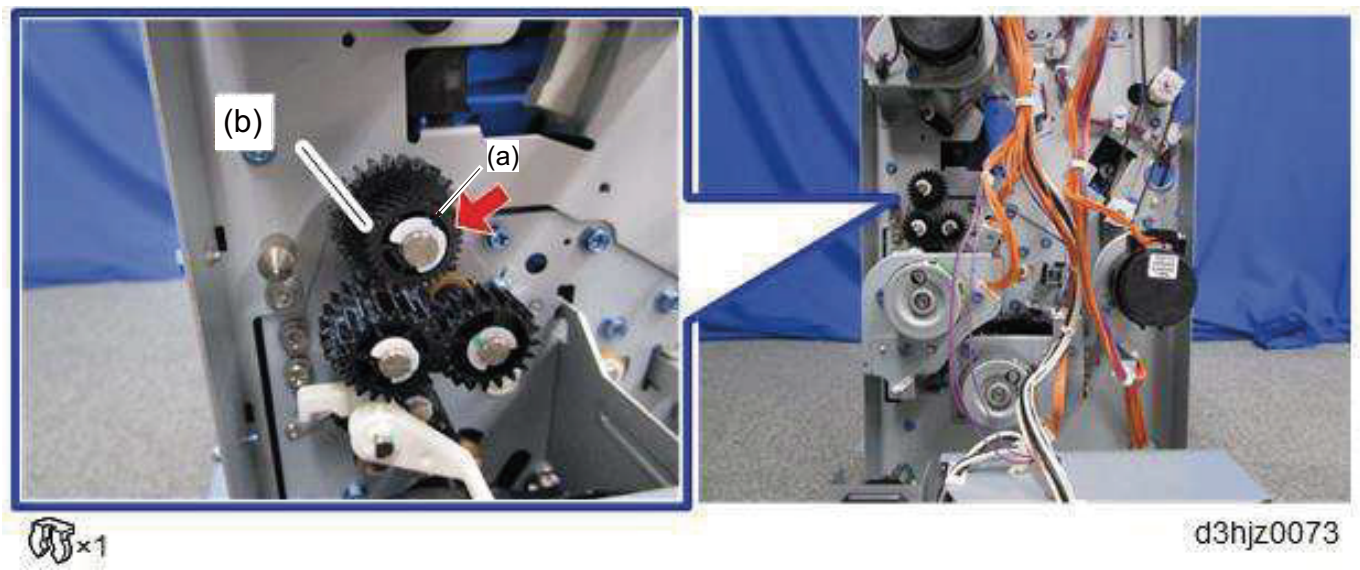

6 Remove the connector (a).

7 Remove screw (b).

8 Remove the sensor with its bracket (c).

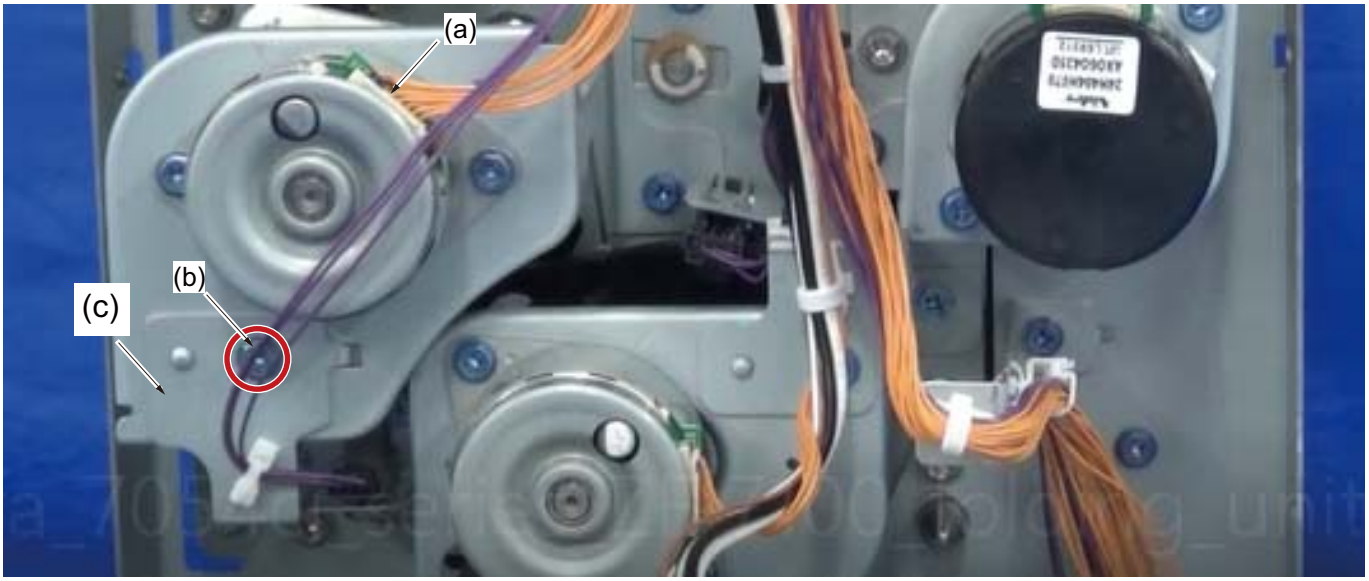

9 Remove the connector (a).

10 Remove screw (b).

11 Remove the sensor with its bracket (c).

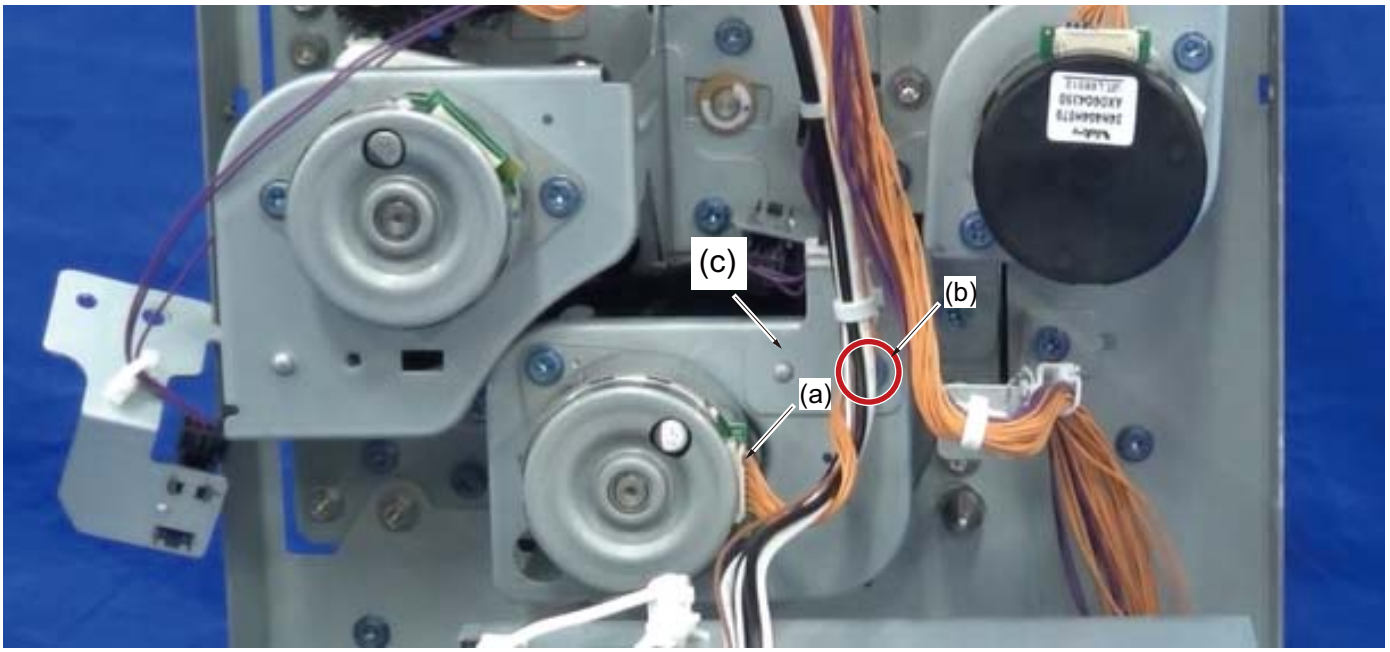

12 Remove the 2 connectors (b) of the front side of the folding unit (a).

13 Release the 2 clamps.

14 Remove the connector (d).

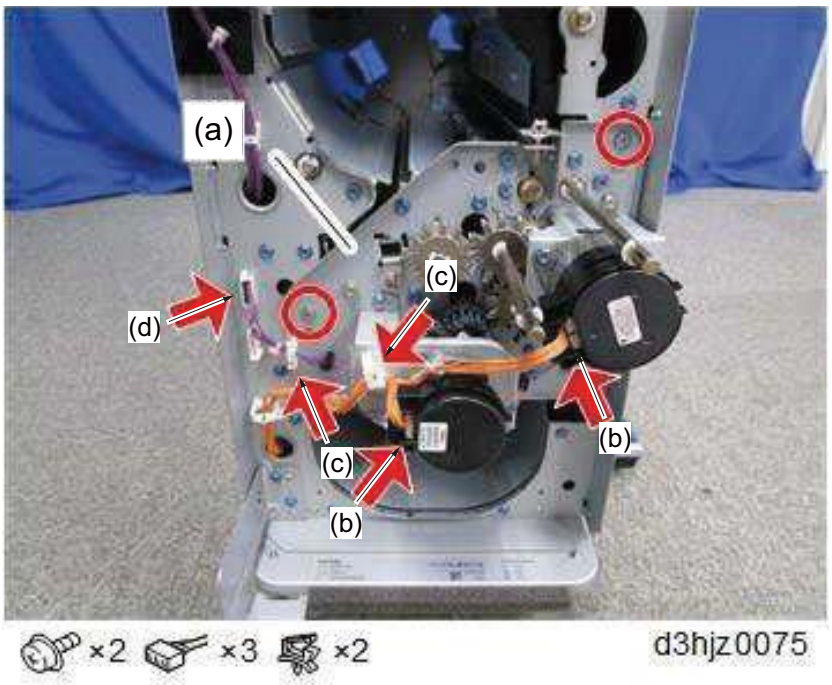

15 Remove 4 screws (b) of the rear side of the folding unit (a) (Using box driver is recommended)

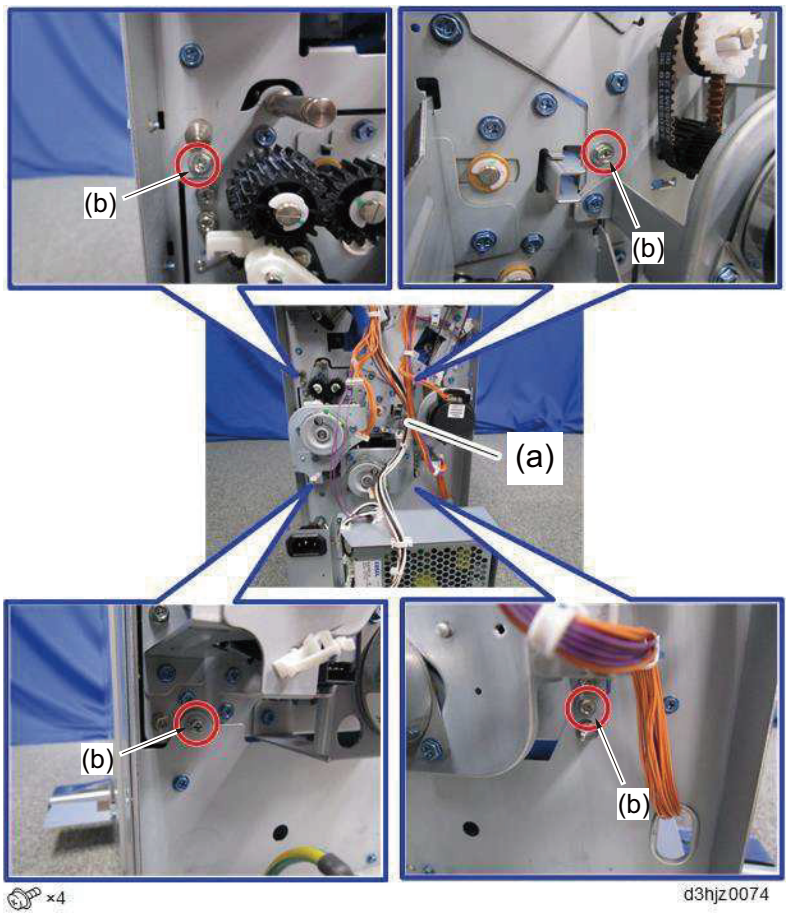

16 Lifting up the guide plate (a) pull out the folding unit (b).

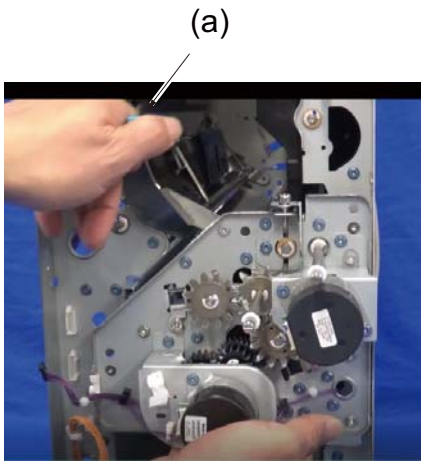

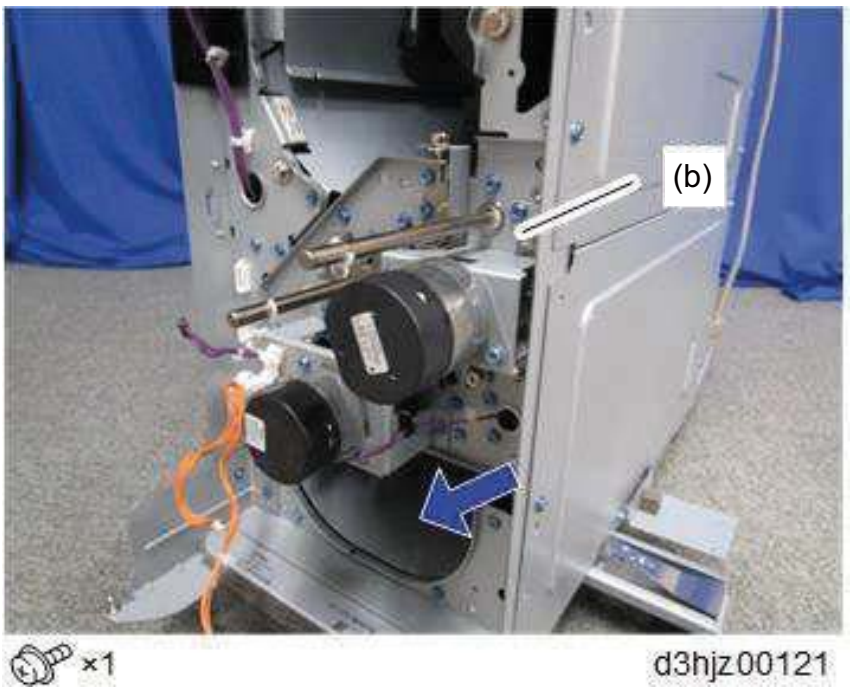

4 - 8 Scheduled maintenance procedure (CH: Inspection CL: Cleaning AD: Adjustment LU: Lubrication RE: Replacement

(1)Main unit

Set up

Maintenance Parts/Location	Delivery	Call	Scheduled Maintenance (X 1,000 counts)				Points/Remarks
			300	600	900	1200	
Test copy Test print (Maximum copy size)	CH AD	CH AD	CH AD	CH AD	CH AD	CH AD	-
Internal Machine		CL	CL	CL	CL	CL	Vacuum : Remove toner or paper dust around paper path and image processing section.
MK-6345				RE		RE	Drum unit K, Developer unit K, Fuser unit, Praimary transfer unit, Secondly transfer unit, Filter (1 pc), Pick up roller, Feed roller, Retard roller, MP feed roller, MP retard roller.

Appearance/Cover

Maintenance Parts/Location	Delivery	Call	Scheduled Maintenance (X 1,000 counts)				Points/Remarks
			300	600	900	1200	
OUTER COVERS	CH		CL	CL	CL	CL	Wipe with alcohol or dry material
SHEET DUCT PU (302ND0444_)		CL	CL	CL	CL	CL	VACUUM Inner cooling filer
FILTER TRANSFER (302ND3324_)		CL	CL	CL	CL	CL	VACUUM Primary transfer filer
FILTER COVER RIGHT (302NV83301_)		CL	CL	CL	CL	CL	VACUUM PWB filer

Paper feed/convey

Maintenance Parts/Location	Delivery	Call	Scheduled Maintenance (X 1,000 counts)				Points/Remarks
			300	600	900	1200	
PARTS CLEANER REGIST ASSY SP (302ND9402*)		CL	CL	CH RE	CL	CH RE	Vacuum: Paper dust
PARTS ROLLER RETARD ASSY SP (302ND9435_)		CL	CL	CH RE	CH RE	CH RE	Wipe with alcohol or dry material (In case of no replacement) CH: Check feed counter U901: Replace every 300K
PARTS PULLEY FEED P ASSY SP (302N49431_)		CL	CL	CH RE	CH RE	CH RE	Wipe with alcohol or dry material (In case of no replacement) CH: Check feed counter U901: Replace every 300K
PARTS PULLEY PICKUP SP (302ND9434*)		CL	CL	CH RE	CH RE	CH RE	Wipe with alcohol or dry material (In case of no replacement) CH: Check feed counter U901: Replace every 300K
Roller/Pulley		CL	CL	CL	CL	CL	Wipe with alcohol or dry material
Conveying guides		CL	CL	CL	CL	CL	Wipe with alcohol or dry material In case if the transfer front guide is dirty due to the toner or the paper dust, it might cause the paper crease. Therefore, make sure to clean the dirt at the transfer front guide when visiting the user for the service.
HOLDER SECONDLY TRANSFER (302ND22040)		CL	CL	CL	CL	CL	Air blow/air brush, Remove adhered toner, paper dust
HOLDER DISCHARGER (302ND22060)		CL	CL	CL	CL	CL	Air blow/air brush, Remove adhered toner, paper dust
PLATE DISCHARGER (302ND22050)		CL	CL	CL	CL	CL	Air blow/air brush, Remove adhered toner, paper dust
GUIDE SECONDLY TRANSFER (302ND22090)		CL	CL	CL	CL	CL	Air blow/air brush, Remove adhered toner, paper dust

MPT feed

Maintenance Parts/Location	Delivery	Call	Scheduled Maintenance (X 1,000 counts)				Points/Remarks
			300	600	900	1200	
PARTS PULLEY FEED ASSY SP (302ND9438*)		CL	CL RE	CL RE	CL RE	CL RE	Wipe with alcohol or dry material (In case of no replacement) CH: Check feed counter U901: Replace every 300K
RETARD ROLLER ASSY (302F90917)		CL	CL RE	CL RE	CL RE	CL RE	Wipe with alcohol or dry material (In case of no replacement) CH: Check feed counter U901: Replace every 300K

Exit/Duplex

Maintenance Parts/Location	Delivery	Call	Scheduled Maintenance (X 1,000 counts)				Points/Remarks
			300	600	900	1200	
Roller/Pulley		CL	CL	CL	CL		Wipe with alcohol or dry material
Conveying guides		CL	CL	CL	CL		Wipe with alcohol or dry material

Scanning

Maintenance Parts/Location	Delivery	Call	Scheduled Maintenance (X 1,000 counts)				Points/Remarks
			300	600	900	1200	
PARTS CONTACT-GLASS ASSY(I)SP (302RH9415*)	CL	CL	CL	CL	CL	CL	DP slit glass: Wipe with alcohol and dry material (Surface only). Wipe it with dry material either in time of DP installation.
PARTS CONTACT-GLASS ASSY(C)SP (302RH9416*)							DP slit glass: Wipe with alcohol and dry material (Surface only).
MIRROR A/B/C		CL					Cleaning only for image failure (lines). Dry wipe and air blow.
LENS ISU		CL					Cleaning only for image failure (lines). Dry wipe and air blow.
PARTS MOUNT LED ASSY SP (302XC9303_)		CL RE					In case of image failure, replace.
RAIL ISU R/F		LU					Lubricate only for noise or other failures. Optical Rail Grease PG-671 (P/N: 6017000)
SENSOR OPT. (302P79401_)		CH CL					Wipe with alcohol or dry material only for failure. (Sensor emit/receipt only)
PARTS ISU (302XC9304_)		CH RE					Replace in case of image failure.

Drive/Others

Maintenance Parts/Location	Delivery	Call	Scheduled Maintenance (X 1,000 counts)				Points/Remarks
			300	600	900	1200	
Clutches		CH RE	CH	CH	CH		Check paper path timing and condition at feed/ convey section.
Sensors		CH	CH	CH	CH		Dry wipe or air blow on receptor or of optical sensor.
Gears		CH LU	CH	CH	CH		Lubricate EM-50LP on gear in case of noise. (PN 7BG010009H GREASE MOLYKOTE EM-50LP 50G)

IMPORTANT

Do not use burnable spray for air blow in this list.

(2)Document processor DP-7150 (Option)

Set up

Maintenance Parts/Location	Delivery	Call	Scheduled Maintenance (X 1,000 counts)				Points/Remarks
			300	600	900	1200	
Test copy/print (Maximum copy size)	CH AD	CH AD	CH AD	CH AD	CH AD	CH AD	-

Appearance/Cover

Maintenance Parts/Location	Delivery	Call	Scheduled Maintenance (X 1,000 counts)				Points/Remarks
			300	600	900	1200	
OUTER COVERS		CL	CL	CL	CL	CL	CL: Alcohol
DP glass		CH CL	CL	CL	CL	CL	Main unit CL: Alcohol or dry material

DP paper feed

Maintenance Parts/Location	Delivery	Call	Scheduled Maintenance (X 1,000 counts)				Points/Remarks
			300	600	900	1200	
PARTS PAPER FEED ROLLER ASSY SP (303R79410*)		CL	RE	RE	RE	RE	CL: Alcohol or dry material CH: Check feed counter U905: Replace every 300K
PULLEY SEPARATION (303LL0719*)		CL	RE	RE	RE	RE	CL: Alcohol or dry material CH: Check feed counter U905: Replace every 300K
SENSOR OPT (302P79401_)		CL	CL	CL	CL	CL	CL: Air blow or dry wipe

DP convey/switchback section

Maintenance Parts/Location	Delivery	Call	Scheduled Maintenance (X 1,000 counts)				Points/Remarks
			300	600	900	1200	
PARTS ROLLER REGISTRATION SP (303R79402_)		CL	CL	CL	CL	CL	Wipe with alcohol or dry material
PULLEY, REGISTRATION (303P72417_)		CL	CL	CL	CL	CL	Wipe with alcohol or dry material X5
PARTS ROLLER CONVEYING LEFT SP (303R79403_)		CL	CL	CL	CL	CL	Wipe with alcohol or dry material
PULLEY CONVEYING BK (303M82421_)		CL	CL	CL	CL	CL	Wipe with alcohol or dry material X5

PARTS ROLLER CONVEYING RIGHT SP (303R79404_)		CL	CL	CL	CL	CL	Wipe with alcohol or dry material
PULLEY CONVEYING BK (303M82421_)		CL	CL	CL	CL	CL	Wipe with alcohol or dry material X3
PARTS ROLLER LOOP SP (303R79406_)		CL	CL	CL	CL	CL	Wipe with alcohol or dry material
PULLEY CONVEYING BK (303M82421_)		CL	CL	CL	CL	CL	Wipe with alcohol or dry material X4
PATS ROLLER EXIT SP (303R79405_)		CL	CL	CL	CL	CL	Wipe with alcohol or dry material
PULLEY EJECT (3HK1003_)		CL	CL	CL	CL	CL	Wipe with alcohol or dry material X2
PARTS ROLLER SHIFT SP (303R79407_)		CL	CL	CL	CL	CL	Wipe with alcohol or dry material
PULLEY EJECT (3HK1003_)		CL	CL	CL	CL	CL	Wipe with alcohol or dry material X2
GUIDE READING (303R72406_)		CL	CL	CL	CL	CL	Wipe with alcohol or dry material
PARTS SENSOR OPT. SP (303NW9406_)		CL	CL	CL	CL	CL	CL: Air blow or dry wipe X2

DP/Others

Maintenance Parts/Location	Delivery	Call	Scheduled Maintenance (X 1,000 counts)				Points/Remarks
			300	600	900	1200	
PLATE ORIGINAL (303JC0420*)		CL	CL	CL	CL	CL	Wipe with alcohol or dry material

IMPORTANT

Do not use burnable spray for air blow in this list.

(3)Document Processor DP-7160/7170 (Option)

Set up

Maintenance Parts/Location	Delivery	Call	Scheduled Maintenance (X 1,000 counts)				Points/Remarks
			300	600	900	1200	
Test copy/print (Maximum copy size)	CH AD	CH AD	CH AD	CH AD	CH AD	CH AD	-

Appearance/Cover

Maintenance Parts/Location	Delivery	Call	Scheduled Maintenance (X 1,000 counts)				Points/Remarks
			300	600	900	1200	
OUTER COVERS		CL	CL	CL	CL	CL	CL: Alcohol
DP glass		CH CL	CL	CL	CL	CL	Main unit CL: Alcohol or dry material

DP paper feed

Maintenance Parts/Location	Delivery	Call	Scheduled Maintenance (X 1,000 counts)				Points/Remarks
			300	600	900	1200	
BELT PF (303LL0753_)		CL	RE	RE	RE	RE	CL: Alcohol or dry material CH: Check feed counter U905: Replace every 300K
PULLEY LF (303M40748_)		CL	RE	RE	RE	RE	CL: Alcohol or dry material CH: Check feed counter U905: Replace every 300K
PULLEY SEPARATION (303TC9410_)		CL	RE	RE	RE	RE	CL: Alcohol or dry material CH: Check feed counter U905: Replace every 300K
PARTS GUIDE SEPARATE ASSY SP (303TC9411_)		CL	CL	CL	CL	CL	CL: Alcohol

DP conveying section

Maintenance Parts/Location	Delivery	Call	Scheduled Maintenance (X 1,000 counts)				Points/Remarks
			300	600	900	1200	
PARTS ROLLER REGISTRATION SP (303TC9404_)		CL	CL	CL	CL	CL	CL: Alcohol or dry material
PULLEY, REGISTRATION BK (303M42430_)		CL	CL	CL	CL	CL	Wipe with alcohol or dry material X8
PULLEY REG B BK (303M42431_)		CL	CL	CL	CL	CL	Wipe with alcohol or dry material

PARTS ROLLER CONVEYING LEFT SP (303M49409_)		CL	CL	CL	CL	CL	Wipe with alcohol or dry material
PULLEY GUIDE READING (303LL2419_)		CL	CL	CL	CL	CL	Wipe with alcohol or dry material X10
PARTS ROLLER CONVEYING RIGHT SP (303M49410_)		CL	CL	CL	CL	CL	Wipe with alcohol or dry material
PARTS ROLLER CONVEYING UPPER SP (303TC9405_)		CL	CL	CL	CL	CL	Wipe with alcohol or dry material
PARTS ROLLER EJECT SP (303M49411_)		CL	CL	CL	CL	CL	Wipe with alcohol or dry material
GUIDE READING (303M42425_)		CL	CL	CL	CL	CL	Wipe with alcohol or dry material
SENSOR OPT. (7NXPS124GD1+H01)		CL	CL	CL	CL	CL	CL: Air blow or dry wipe

DP table section

Maintenance Parts/Location	Delivery	Call	Scheduled Maintenance (X 1,000 counts)				Points/Remarks
			300	600	900	1200	
SENSOR OPT. (7NXPSR11GD6FH01)		CL	CL	CL	CL	CL	CL: Air blow or dry wipe

DP Others

Maintenance Parts/Location	Delivery	Call	Scheduled Maintenance (X 1,000 counts)				Points/Remarks
			300	600	900	1200	
PLATE ORIGINAL (303JC0420*)		CL	CL	CL	CL	CL	Wipe with alcohol or dry material

DP CIS section

Maintenance Parts/Location	Call	Scheduled Maintenance (X 1,000 counts)				Points/Remarks
		300	600	900	1200	
PARTS ROLLER CIS SP	CL	CL	CL	CL	CL	Wipe with alcohol or dry material
GLASS CIS	CL	CL	CL	CL	CL	CL: Alcohol or dry material (Must not wet).

IMPORTANT

Do not use burnable spray for air blow in this list.

(4)Paper feeder (PF-7140) (Option)

Set up

Maintenance Parts/Location	Delivery	Call	Scheduled Maintenance Conform to main unit cycle				Points/Remarks
PAPER LINE	CH AD						------

Appearance/Cover

Maintenance Parts/Location	Delivery	Call	Scheduled Maintenance Conform to main unit cycle				Points/Remarks
OUTER COVERS	------	CL	CL				Wipe with alcohol or dry material

Paper feed/convey

Maintenance Parts/Location	Delivery	Call	Scheduled Maintenance Conform to main unit cycle				Points/Remarks
PARTS PULLEY SET SP (302ND9470*)		CL	CH RE				Wipe with alcohol or dry material CH: Check feed counter U901: Replace every 300K
PARTS ROLLER RETARD ASSY SP (302ND9435*)		CL					Wipe with alcohol or dry material (In case of no replacement)
PULLEY FEED (302N40603*)		CL					Wipe with alcohol or dry material (In case of no replacement)
PARTS PULLEY PICKUP SP (302ND9434*)		CL					Wipe with alcohol or dry material (In case of no replacement)
PARTS ROLLER FEED LOW SP (302ND9436*)		CL	CL				Wipe with alcohol or dry material
Conveying guides		CL	CL				Wipe with alcohol or dry material

PF drive section/Others

Maintenance Parts/Location	Delivery	Call	Scheduled Maintenance Conform to main unit cycle				Points/Remarks
Clutches		CL RE	CL				Check paper path timing and condition at feed/convey section.
Sensors		CH	CH				Dry wipe or air blow on receptor or of optical sensor.

IMPORTANT

Do not use burnable spray for air blow in this list.

(5)Paper feeder (PF-7150) (Option)

Set up

Maintenance Parts/Location	Delivery	Call	Scheduled Maintenance Conform to main unit cycle				Points/Remarks
PAPER LINE	CH AD						------

Appearance/Cover

Maintenance Parts/Location	Delivery	Call	Scheduled Maintenance Conform to main unit cycle				Points/Remarks
OUTER COVERS	------		CL	CL			Wipe with alcohol or dry material

Paper feed/convey

Maintenance Parts/Location	Delivery	Call	Scheduled Maintenance Conform to main unit cycle				Points/Remarks
PARTS PULLEY SET SP (302ND9470*)		CL	CH RE				Wipe with alcohol or dry material CH: Check feed counter U901: Replace every 300K
PARTS ROLLER RETARD ASSY SP (302ND9435*)		CL					Wipe with alcohol or dry material (In case of no replacement)
PULLEY FEED (302N40603*)		CL					Wipe with alcohol or dry material (In case of no replacement)
PARTS PULLEY PICKUP SP (302ND9434*)		CL					Wipe with alcohol or dry material (In case of no replacement)
PARTS ROLLER FEED LOW SP (302ND9436*)		CL	CL				Wipe with alcohol or dry material
PARTS ROLLER FEED LOWER SP (303RC9407*)		CL	CL				Wipe with alcohol or dry material
Conveying guides		CL	CL				Wipe with alcohol or dry material

PF drive section/Others

Maintenance Parts/Location	Delivery	Call	Scheduled Maintenance Conform to main unit cycle				Points/Remarks
Clutches		CH RE	CH				Check paper path timing and condition at feed/convey section.
Sensors		CH	CH				Dry wipe or air blow on receptor or of optical sensor.

IMPORTANT

Do not use burnable spray for air blow in this list.

(6)Paper feeder (PF-7120) (Option)

Set up

Maintenance Parts/Location	Delivery	Call	Scheduled Maintenance Conform to main unit cycle				Points/Remarks
PAPER LINE	CH AD						------

Appearance/Cover

Maintenance Parts/Location	Delivery	Call	Scheduled Maintenance Conform to main unit cycle				Points/Remarks
OUTER COVERS	------		CL	CL			Wipe with alcohol or dry material

Paper feed/convey

Maintenance Parts/Location	Delivery	Call	Scheduled Maintenance Conform to main unit cycle				Points/Remarks
PULLEY FEED (302K90635*)		CL	CH RE				Wipe with alcohol or dry material CH: Check feed counter U901: Replace every 300K
PULLEY RETARD (302K90636*)		CL	CH RE				Wipe with alcohol or dry material CH: Check feed counter U901: Replace every 300K
PULLEY PICKUP (302K90637*)		CL	CH RE				Wipe with alcohol or dry material CH: Check feed counter U901: Replace every 300K
PARTS ROLLER ASSIST SP (303NG9406*)			CL				Wipe with alcohol or dry material
PARTS CLUTCH 50 Z35R SP (302KV9452_)		CH RE	CH				Check paper path timing and condition at feed/convey section.
Conveying guides		CL	CL				Wipe with alcohol or dry material

Others

Maintenance Parts/Location	Delivery	Call	Scheduled Maintenance Conform to main unit cycle				Points/Remarks
Sensors		CH	CH				Dry wipe or air blow on receptor or of optical sensor twice.

IMPORTANT

Do not use burnable spray for air blow in this list.

(7)Attachment Kit (AK-7110) (Option)

Appearance/Cover

Maintenance Parts/Location	Delivery	Call	Scheduled Maintenance Conform to main unit counts				Points/Remarks
OUTER COVERS		CL	CL				Wipe with alcohol or dry material

BR conveying section

Maintenance Parts/Location	Delivery	Call	Scheduled Maintenance Conform to main unit counts				Points/Remarks
PARTS ROLLER FEED A SP (303RG9402*)		CL	CL				Wipe with alcohol or dry material
PARTS ROLLER FEED C SP (303RG9404*)		CL	CL				Wipe with alcohol or dry material
PULLEYS		CL	CL				Wipe with alcohol or dry material
GUIDES		CH	CH				Wipe with alcohol or dry material

IMPORTANT

Do not use burnable spray for air blow in this list.

(8)Inner Finisher (DF-7100) (Option)

Appearance/Cover

Maintenance Parts/Location	Delivery	Call	Scheduled Maintenance Conform to main unit counts				Points/Remarks
Cover, Tray			CL				Wipe with alcohol or dry material

DF convey/exit section

Maintenance Parts/Location	Delivery	Call	Scheduled Maintenance Conform to main unit counts				Points/Remarks
PARTS ROLLER FEED SP (303RD9404_)			CL				Wipe with alcohol or dry material
PARTS ROLLER FEED UPPER SP (303RD9403_)			CL				Wipe with alcohol or dry material
PARTS ROLLER CONVEYING SP (303RD9405_)			CL				Wipe with alcohol or dry material X2
PULLEY MIDDLE A (302H72276_)			CL				Wipe with alcohol or dry material
PARTS ROLLER MIDDLE SP (303RD9406_)			CL				Wipe with alcohol or dry material
PULLEY MIDDLE (303NB3666*)			CL				Wipe with alcohol or dry material X2
PULLEY PAPER FEED (3BR0704*)			CL				Wipe with alcohol or dry material X2
PULLEY EXIT (303RD3613*)			CL				Wipe with alcohol or dry material X2
PULLEY EXIT ONEWAYCLUTCH (303RD3618*)			CL				Wipe with alcohol or dry material X2
STATIC-ELIMINATOR EJECT CENTER (303NB3650*)			CH				CH: Remove dust from brush. X2
STATIC-ELIMINATOR EJECT (303RD3620*)			CH				CH: Remove dust from brush. X2

Sensors

Maintenance Parts/Location	Delivery	Call	Scheduled Maintenance Conform to main unit counts				Points/Remarks
PARTS SENSOR OPT SP (302P79401_)			CL				CL: Air blow x10
PARTS SENSOR OPT SP (303PX9403_)			CL				CL: Air blow
PARTS SENSOR OPT SP (303NW9404_)			CL				CL: Air blow

IMPORTANT

Do not use burnable spray for air blow in this list.

(9)Punch Unit (PH-7100/7120/7130) (Option)

Appearance/Cover

Maintenance Parts/Location	Delivery	Call	Scheduled Maintenance Conform to main unit counts				Points/Remarks
Cover, Tray			CL				Wipe with alcohol or dry material

Sensors

Maintenance Parts/Location	Delivery	Call	Scheduled Maintenance Conform to main unit counts				Points/Remarks
PARTS SENSOR OPT. SP (303NW9406_)			CL				CL: Air blow
PARTS SENSOR OPT. SP (302P79401_)			CL				CL: Air blow X3
SENSOR A,SEPARATION (303H32746_)			CL				CL: Air blow
PARTS SENSOR OPT. SP (303NB9414_)			CL				CL: Air blow

IMPORTANT

Do not use burnable spray for air blow in this list.

(10)4000-sheet Finisher (DF-7140)

Appearance/Cover

Maintenance Parts/Location	Delivery	Call	Scheduled Maintenance Conform to main unit counts				Points/Remarks
Cover, Tray			CL				Wipe with alcohol or dry material

DF convey/exit section

Maintenance Parts/Location	Delivery	Call	Scheduled Maintenance Conform to main unit counts				Points/Remarks
PARTS ROLLER FEED LOWER SP (303RW9402_)			CL				Wipe with alcohol or dry material
PARTS ROLLER FEED UPPER SP (303RW9403_)			CL				Wipe with alcohol or dry material
PARTS ROLLER MIDDLE SP (303RW9405_)			CL				Wipe with alcohol or dry material
PULLEY MIDDLE (303NB3666_)			CL				Wipe with alcohol or dry material X2
PARTS ROLLER EXIT SP (303NB9409_)			CL				Wipe with alcohol or dry material
PULLEY EXIT (303NB3620_)			CL				Wipe with alcohol or dry material X2
PARTS ROLLER SUB CONVEYING SP (303RW9404_)			CL				Wipe with alcohol or dry material
PARTS ROLLER SUB EXIT SP (303NB9406_)			CL				Wipe with alcohol or dry material
PULLEY SUB EJECT (303V82401*)			CL				Wipe with alcohol or dry material X2
PULLEY SUB EJECT (303NB2431*)			CL				Wipe with alcohol or dry material X4
STATIC ELIMINATOR EJECT (6321221*)			CH				CH: Remove dust from brush.
STATIC ELIMINATOR EJECT CENTER (303NB3650*)			CH				CH: Remove dust from brush.

STATIC ELIMINATOR EJECT SIDE (303NB3649*)			CH				CH: Remove dust from brush. X2
STATIC ELIMINATOR EJECT (303NB2430*)			CH				CH: Remove dust from brush.

DF Sensors

Maintenance Parts/Location	Delivery	Call	Scheduled Maintenance Conform to main unit counts				Points/Remarks
PARTS SENSOR OPT. SP (303NW9406_)			CL				CL: Air blow X2
PARTS SENSOR OPT. SP (303M89426_)			CL				CL: Air blow X17
PARTS SENSOR OPT. SP (303NW9405_)			CL				CL: Air blow
SENSOR A, SEPARATION (303H32746_)			CL				CL: Air blow
PARTS SENSOR OPT. SP (303NB9414_)			CL				CL: Air blow
PARTS SENSOR OPT. SP (302P79401_)			CL				CL: Air blow

IMPORTANT

Do not use burnable spray for air blow in this list.

(11)1000-sheet Finisher (DF-7120)

Appearance/Cover

Maintenance Parts/Location	Delivery	Call	Scheduled Maintenance Conform to main unit counts				Points/Remarks
Cover, Tray			CL				Wipe with alcohol or dry material

DF convey/exit section

Maintenance Parts/Location	Delivery	Call	Scheduled Maintenance Conform to main unit counts				Points/Remarks
PARTS ROLLER FEED LOWER SP (303RW9402_)			CL				Wipe with alcohol or dry material
PARTS ROLLER FEED UPPER SP (303RW9403_)			CL				Wipe with alcohol or dry material
PARTS ROLLER MIDDLE SP (303RW9405_)			CL				Wipe with alcohol or dry material
PULLEY MIDDLE (303NB3666_)			CL				Wipe with alcohol or dry material X2
ROLLER EXIT (303NC3601_)			CL				Wipe with alcohol or dry material
PULLEY EXIT (303NB3620*)			CL				Wipe with alcohol or dry material X2
STATIC ELIMINATOR EJECT (6321221*)			CH				CH: Remove dust from brush.
STATIC ELIMINATOR EJECT CENTER (303NB3650*)			CH				CH: Remove dust from brush.
STATIC ELIMINATOR EJECT SIDE (303NB3649*)			CH				CH: Remove dust from brush. X2

DF Sensors

Maintenance Parts/Location	Delivery	Call	Scheduled Maintenance Conform to main unit counts				Points/Remarks
PARTS SENSOR OPT. SP (303NW9406_)			CL				CL: Air blow X2
PARTS SENSOR OPT. SP (303M89426_)			CL				CL: Air blow X9

PARTS SENSOR OPT. SP (302P79401_)			CL				CL: Air blow
SENSOR A, SEPARATION (303H32746_)			CL				CL: Air blow
PARTS SENSOR OPT. SP (303MB9414)			CL				CL: Air blow

IMPORTANT

Do not use burnable spray for air blow in this list.

(12)Booklet folding Unit (BF-730) (Option)

Appearance/Cover

Maintenance Parts/Location	Delivery	Call	Scheduled Maintenance Conform to main unit counts				Points/Remarks
Cover, Tray			CL				Wipe with alcohol or dry material

DF convey/exit section

Maintenance Parts/Location	Delivery	Call	Scheduled Maintenance Conform to main unit counts				Points/Remarks
PARTS ROLLER EJECT SP (303ND9403*)			CL				Wipe with alcohol or dry material
PARTS ROLLER EJECT 3 FOLD UP SP (303ND9404*)			CL				Wipe with alcohol or dry material
BRUSH PAPER EJ REGIST			CL				Wipe with alcohol or dry material
PARTS ROLLER FEED IN SP (303ND9402*)			CL				Wipe with alcohol or dry material
PARTS ROLLER BRIDGE LOW S (303ND9409*)			CL				Wipe with alcohol or dry material X2
PARTS ROLLER BRIDGE UP SP (303ND9408*)							Wipe with alcohol or dry material
PULLEY DU LOW			CL				Wipe with alcohol or dry material (Puller for exit guide) X2
PULLEY MIDDLE			CL				Wipe with alcohol or dry material (Puller for exit guide) X2
PULLEY FEED IN			CL				Wipe with alcohol or dry material (Fold entrance section) X4
PULLEY, EJECT			CL				Wipe with alcohol or dry material (Fold entrance section) X4
RUBBER FEED IN			CL				Wipe with alcohol or dry material (Rubber of fold entrance section) X4
PULLEY MIDDLE A			CL				Wipe with alcohol or dry material X4

BF center fold section

Maintenance Parts/Location	Delivery	Call	Scheduled Maintenance Conform to main unit counts				Points/Remarks
PARTS ROLLER PRESS A SP (303ND9405*)			CL				Wipe with alcohol or dry material

PARTS ROLLER PRESS B SP (303ND9406*)			CL				Wipe with alcohol or dry material
PARTS ROLLER PRESS C SP (303ND9407*)			CL				Wipe with alcohol or dry material

BF Sensors

Maintenance Parts/Location	Delivery	Call	Scheduled Maintenance Conform to main unit counts				Points/Remarks
PARTS SENSOR OPT SP (303M89426*)			CL				Air blow X8
PARTS SENSOR OPT SP (303NW9406*)			CL				Air blow X2

IMPORTANT

Do not use burnable spray for air blow in this list.

(13)Mailbox (MT-730(B)) (Option)

Appearance/Cover

Maintenance Parts/Location	Delivery	Call	Scheduled Maintenance Conform to main unit counts				Points/Remarks
Cover, Tray			CL				Wipe with alcohol or dry material

MT convey/exit section

Maintenance Parts/Location	Delivery	Call	Scheduled Maintenance Conform to main unit counts				Points/Remarks
PARTS ROLLER CONVEYING (303LW9401*)			CL				Wipe with alcohol or dry material X3
PARTS ROLLER EJECT A (303LW9402*)			CL				Wipe with alcohol or dry material X6
PARTS ROLLER EJECT C SP (303N09402*)			CL				Wipe with alcohol or dry material

IMPORTANT

Do not use burnable spray for air blow in this list.

(14)Punch Unit (PH-7A/B/C/D) (Option)

PH convey/exit section

Maintenance Parts/Location	Delivery	Call	Scheduled Maintenance Conform to main unit counts				Points/Remarks
GEAR 40 CAM DRIVE (3H41611_)			LU				Lubricate EM-50LP on gear. (PN 7BG010009H GREASE MOLYKOTE EM-50LP 50G)
GEAR 16-51 IDLE (3H41612_)			LU				Lubricate EM-50LP on gear. (PN 7BG010009H GREASE MOLYKOTE EM-50LP 50G)
PARTS MOTOR-PM MOVING SP (303NB9404*)			LU				Lubricate EM-50LP on gear. (PN 7BG010009H GREASE MOLYKOTE EM-50LP 50G)

PH Sensors

Maintenance Parts/Location	Delivery	Call	Scheduled Maintenance Conform to main unit counts				Points/Remarks
SENSOR FEED B (303H32750*)			CL				CL: Air blow or dry wipe

IMPORTANT

Do not use burnable spray for air blow in this list.

(15)100 sheet staple finisher (DF-7150) (Optional)

Appearance/Cover

Maintenance Parts/Location	Delivery	Call	Scheduled Maintenance Conform to main unit counts				Points/Remarks
Cover, Tray			CL				Wipe with alcohol or dry material

DF convey/exit section

Maintenance Parts/Location	Delivery	Call	Scheduled Maintenance Conform to main unit counts				Points/Remarks
PARTS ROLLER FEED LOW(SP) (303S89404_)			CL				Wipe with alcohol or dry material
ROLLER FEED UP (303S80703_)			CL				Wipe with alcohol or dry material
PARTS ROLLER MIDDLE FEED LOW(SP) (303S89410_)			CL				Wipe with alcohol or dry material
PULLEY MIDDLE A (302H72276_)			CL				Wipe with alcohol or dry material x2
PARTS PULLEY PAPER FEED B(SP) (303S89411_)			CL				Wipe with alcohol or dry material x2
ROLLER MIDDLE UPPER (303S83626_)			CL				Wipe with alcohol or dry material
PARTS PULLEY PAPER FEED(SP) (303S89409_)			CL				Wipe with alcohol or dry material x2
PARTS PULLEY EJECT ROLLER(SP) (303S89408_)			CL				Wipe with alcohol or dry material x4
PARTS ROLLER SUB CONVEYING(SP) (303S89406_)			CL				Wipe with alcohol or dry material
PULLEY FEED (303S82429_)			CL				Wipe with alcohol or dry material x2
PARTS ROLLER SUB EXIT(SP) (303S89407_)			CL				Wipe with alcohol or dry material
PULLEY MIDDLE (303S82428_)			CL				Wipe with alcohol or dry material x4
PARTS ROLLER SIDETRACK(SP) (303S89405_)			CL				Wipe with alcohol or dry material

STATIC ELIMINATOR (303S80711_)			CH				CH: Remove dust from brush. x2
STATIC ELIMINATOR CURSOR (303JY3722_)			CH				CH: Remove dust from brush. x2
STATIC-ELIMINATOR SUB EJECT (303NB2430_)			CH				CH: Remove dust from brush.

DF Sensors

Maintenance Parts/Location	Delivery	Call	Scheduled Maintenance Conform to main unit counts				Points/Remarks
PARTS SENSOR OPT. SP (303NW9406_)			CL				CL: Air blow x5
PARTS SENSOR OPT. SP (303NW9404_)			CL				CL: Air blow
PARTS SENSOR OPT. SP (3032P79401_)			CL				CL: Air blow x22
SENSOR A,SEPARATION (303H32746_)			CL				x2
PARTS SENSOR OPT. SP (303MB9414)			CL				CL: Air blow x2
PARTS SENSOR OPT. SP (303NW9405_)			CL				CL: Air blow
PARTS PWB SENSOR C ASSY SP (303R19404_)			CL				CL: Air blow
PARTS PWB SENSOR D ASSY SP (303R19405_)			CL				CL: Air blow

IMPORTANT

Do not use burnable spray for air blow in this list.

(16)Booklet Unit (BF-9100) (Optional)

Appearance/Cover

Maintenance Parts/Location	Delivery	Call	Scheduled Maintenance Conform to main unit counts				Points/Remarks
Cover, Tray			CL				Wipe with alcohol or dry material

BF convey/exit section

Maintenance Parts/Location	Delivery	Call	Scheduled Maintenance Conform to main unit counts				Points/Remarks
PARTS ROLLER EJECT (SP) (303SP9402_)			CL				Wipe with alcohol or dry material
PARTS ROLLER EJECT 3 FOLD (SP) (303SP9403_)			CL				Wipe with alcohol or dry material
BRUSH PAPER EJ REGIST (303ND2830_)			CL				Wipe with alcohol or dry material X2
PARTS ROLLER FEED IN (SP) (303SP9407_)			CL				Wipe with alcohol or dry material
PARTS ROLLER BRIDGE LOW (SP) (303SP9409_)			CL				Wipe with alcohol or dry material
PARTS ROLLER BRIDGE UP (SP) (303SP9408_)			CL				Wipe with alcohol or dry material
PULLEY DU LOW (302F92926_)			CL				Wipe with alcohol or dry material X2
PULLEY CONVEYING (303JX2916_)			CL				Wipe with alcohol or dry material X2
PULLEY FEED IN (303SP2401_)			CL				Wipe with alcohol or dry material X4
RUBBER FEED IN (303ND2424_)			CL				Wipe with alcohol or dry material X6
PULLEY MIDDLE A (302H72276_)			CL				Wipe with alcohol or dry material X4
SHEET PADDLE (303PX3670_)			CL				Wipe with alcohol or dry material X2
SHEET PADDLE (303SP2414_)			CL				Wipe with alcohol or dry material X2

BELT EJECT CONVEYING (303SP2855_)			CL				Wipe with alcohol or dry material X4
DISCHARGER GUIDE UP (303JY3740_)			CL				CH: Remove dust from brush.

BF center fold section

Maintenance Parts/Location	Delivery	Call	Scheduled Maintenance Conform to main unit counts				Points/Remarks
PARTS ROLLER PRESS A SP (303ND9405_)			CL				Wipe with alcohol or dry material
PARTS ROLLER PRESS B SP (303ND9406_)			CL				Wipe with alcohol or dry material
PARTS ROLLER PRESS C SP (303ND9407_)			CL				Wipe with alcohol or dry material
BLADE MID PRESSING (303SP2482_)		CH/RE	CL				Wipe with alcohol or dry material CH: Replace it if there is deformation, bet, etc.

BF Sensors

Maintenance Parts/Location	Delivery	Call	Scheduled Maintenance Conform to main unit counts				Points/Remarks
PARTS SENSOR OPT. SP (303M89426_)			CL				Air blow X3
PARTS SENSOR OPT. SP (303NW9406_)			CL				Air blow X3
PARTS SENSOR OPT. SP (302P79401_)			CL				Air blow X6

IMPORTANT

Do not use burnable spray for air blow in this list.

(17)Inserter (IF-7100) (Optional)

Appearance/Cover

Maintenance Parts/Location	Delivery	Call	Scheduled Maintenance Conform to main unit counts(x1000 count)				Points/Remarks
			300	600	----	----	
Cover, Tray			CL				Wipe with alcohol or dry material

paper feed/convey/exit section

Maintenance Parts/Location	Delivery	Call	Scheduled Maintenance Conform to main unit counts(x1000 count)				Points/Remarks
			300	600	----	----	
ROLLER VERTICAL (303TF0801_)			CL	CL			Wipe with alcohol or dry material
ROLLER REGISTRATION (303TF0802_)			CL	CL			Wipe with alcohol or dry material
ROLLER EXIT (303TF2420_)			CL	CL			Wipe with alcohol or dry material
ROLLER CONVEY UP (303TF2421_)			CL	CL			Wipe with alcohol or dry material
ROLLER FEED (303TF2422_)			CL	CL			Wipe with alcohol or dry material
PARTS SENSOR OPT.SP (303NW9404_)			CL	CL			Wipe with alcohol or dry material
BELT PF (303LL0753_)			CL	CH			CL: Wipe with alcohol or dry material CH: Check feed counter U251: Replace every 300K
PULLEY LF (303M40748_)			CL	CH			CL: Wipe with alcohol or dry material CH: Check feed counter U905: Replace every 300K
PULLEY SEPARATION SP (303TC9410_)			CL	CH			CL:Wipe with alcohol or dry material CH: Check feed counter U905: Replace every 300K
PARTS GUIDE SEPARATE ASSY SP (303TC9411_)			CL	CL			Wipe with alcohol or dry material

(18)Z-folding unit (ZF-7100) (Optional)

Appearance/Cover

Maintenance Parts/Location	Delivery	Call	Scheduled Maintenance Conform to main unit counts				Points/Remarks
Cover		CL	CL				Wipe with alcohol or dry material

convey/exit section

Maintenance Parts/Location	Delivery	Call	Scheduled Maintenance Conform to main unit counts				Points/Remarks
Conveying roller			CL				Wipe with water or dry material
Exit roller			CL				Wipe with water or dry material
Driven roller			CL				Wipe with water or dry material
Folding roller			CL				Wipe with water or dry material
Tray			CL				Wipe with water or dry material
Bushing			LU				Silicone oil When noise occur
Sensor			CL				Wipe with Air blow or dry material
Crease folding section film			CL				Wipe with water or dry material

5 Firmware

5 - 1 Firmware update

Execute the following to update the firmware below.

*The processing time is reduced with parallel processing by group.

[GROUP 1 UPDATE]

UPDATE step	Target	Master file name	Message
1	Controller Package	DL_PKG_CTRL.2XF	CPKG
	Product Line Platform	DL_CTRL_PLP.2XF	PLP
	Common Basic App	DL_CTRL_STDAPP_CMN.2XF	CMN
	System Setting App	DL_CTRL_STDAPP_SST.2XF	SST
	Maintenance App	DL_CTRL_STDAPP_MNT.2XF	MNT
	Copy App	DL_CTRL_STDAPP_CPY.2XF	CPY
	Print App	DL_CTRL_STDAPP_PRT.2XF	PRT
	Send App	DL_CTRL_STDAPP_SND.2XF	SND
	Box App	DL_CTRL_STDAPP_BOX.2XF	BOX
	Fax App	DL_CTRL_STDAPP_FAX.2XF	SFAX
	Web Page App	DL_CTRL_STDAPP_WPG.2XF	WPG
	Auth App	DL_CTRL_STDAPP_AUTH.2XF	AUTH
	Panel Control System App	DL_CTRL_STDAPP_PCS.2XF	PCS
	Service Cooperation App	DL_CTRL_STDAPP_SCO.2XF	SCO
	Home App	DL_CTRL_STDAPP_HOME.2XC	HOME
	Extension Service Platform	DL_CTRL_EXSP.2XF	EXSP
	Package Version Info	DL_CTRL_VINF.2XF	VINF
1	Option Language Data	DL_OPT.2XC	OPT
1	OCR Dictionary Data	DL_OCR.2XC	OCR
1	Super Resolution Data	DL_AI_SPR.2XC	SPR
1	Emphasize Handwriting Data	DL_AI_EHW2XC	EHW

Each FW-Update targets in Group 1 are updated by Parallel Update method.

[GROUP2 UPDATE]

UPDATE step	Target	Master file name	Message
1	FAX Board	DL_FAX.3R2	FAX1,2

[GROUP 3 UPDATE]

UPDATE step	Target	DL_03V4.2XC	Message
1	Engine Firmware	DL_03RL.2ND	ENGN
2	Paper Feeder Main (500*2)	DL_03V9.2XC	PF-UNDER
3	Large Capacity Feeder (3000)	DL_03SP.2TJ	PF-UNDER

UPDATE step	Target	DL_03V4.2XC	Message
4	Paper Feeder Side Deck	DL_M3V9.2XC	PF-SIDE
5	100-staple Document Finisher	DL_03V8.2XC	STP-DF
6	100-staple Document Finisher Booklet	DL_03N0.2ND	BKLT-ADV
7	100-staple Document Finisher (Sub)	DL_03RW.2ND	SUB-DF
8	3000/4000 Document Finisher Main	DL_03ND.2ND	DF
9	3000/4000 Document Finisher Mail Box	DL_03NK.2RH	MAIL-BOX
10	Document Finisher Simple (1000)	DL_03RD.2ND	DF
11	4000 Document Finisher Booklet	DL_03RF.2ND	BOOKLET
12	3000 Document Finisher Punch Unit	DL_03TC.2XC	P-UNIT
13	Inner Document Finisher	DL_03TF.2XC	INNER-DF
14	Inner Punch	DL_05MR.2XC	INNER-PU
15	Document Processor Main (with multi-feed detection)	DL_M2XC.2XC	DP-MFD
16	Document Processor Main (CIS)	DL_03TC.2XC	DP-CIS
17	Document Processor Main (REV)	DL_03V3.2XC	DP-REV
18	Document Processor Main (LOW)	DL_DPRC.2P1	DP-LOW

[GROUP 4 UPDATE] : No applicable firmware is available.

[GROUP 5 UPDATE]

UPDATE step	Target	Master file name	Message
1	Sub Panel Board (Sub Panel)	DL_SPNL.2XC	SPNL
	Sub Panel Board (Configuration File)	DL_SPCF.2V8	SPCF

Verify the signature at firmware update

Verify the signature of the update file to prevent the firmware update with illegally falsified data.

File names of the signature and firmware certificate

Target	Signature file name	Firmware certificate file name
Product Line Platform	2VK_CTRL_PLP_sign.bin	2VK_CTRL_PLP_cert.pem
Common Basic App	2VK_CTRL_STDAPP_CMN_sign.bin	2VK_CTRL_STDAPP_CMN_cert.pem
System Setting App	2VK_CTRL_STDAPP_SST_sign.bin	2VK_CTRL_STDAPP_SST_cert.pem
Maintenance App	2VK_CTRL_STDAPP_MNT_sign.bin	2VK_CTRL_STDAPP_MNT_cert.pem
Copy App	2VK_CTRL_STDAPP_PRT_sign.bin	2VK_CTRL_STDAPP_PRT_cert.pem
Print App	2VK_CTRL_STDAPP_SND_sign.bin	2VK_CTRL_STDAPP_SND_cert.pem
Send App	2VK_CTRL_STDAPP_SND_sign.bin	2VK_CTRL_STDAPP_SND_cert.pem
Box App	2VK_CTRL_STDAPP_BOX_sign.bin	2VK_CTRL_STDAPP_BOX_cert.pem
Fax App	2VK_CTRL_STDAPP_FAX_sign.bin	2VK_CTRL_STDAPP_FAX_cert.pem
Web Page App	2VK_CTRL_STDAPP_WPG_sign.bin	2VK_CTRL_STDAPP_WPG_cert.pem

Target	Signature file name	Firmware certificate file name
Auth App	2VK_CTRL_STDAPP_AUTH_sign.bin	2VK_CTRL_STDAPP_AUTH_cert.pem
Panel Control System App	2VK_CTRL_STDAPP_PCS_sign.bin	2VK_CTRL_STDAPP_PCS_cert.pem
Service Cooperation App	2VK_CTRL_STDAPP_SCO_sign.bin	2VK_CTRL_STDAPP_SCO_cert.pem
Extension Service Platform	2VK_CTRL_EXSP_sign.bin	2VK_CTRL_EXSP_cert.pem
Package Version Info	2VK_CTRL_VINF_sign.bin	2VK_CTRL_VINF_cert.pem
Option Language Data	2VK_OPT_sign.bin	2VK_OPT_cert.pem
OCR Dictionary Data	2V8_OCR_sign.bin	2V8_OCR_cert.pem
FAX Board	3R2_FAX_sign.bin	3R2_FAX_cert.pem
Engine Firmware	2VK_ENGN_sign.bin	2VK_ENGN_cert.pem
Paper Feeder Main (500*2)	2ND_03RB_sign.bin	2ND_03RB_cert.pem
Large Capacity Feeder (3000)	2ND_03RB_sign.bin	2ND_03RB_cert.pem
Paper Feeder Side Deck	2ND_03RL_sign.bin	2ND_03RL_cert.pem
100-staple Document Finisher	2VG_03SW_sign.bin	2VG_03SW_cert.pem
100-staple Document Finisher Booklet	2TJ_03SP_sign.bin	2TJ_03SP_cert.pem
100-staple Document Finisher (Sub)	2TJ_M3S8_sign.bin	2TJ_M3S8_cert.pem
3000/4000 Document Finisher Main	2ND_03RW_sign.bin	2ND_03RW_cert.pem
3000/4000 Document Finisher Mail Box	2ND_03N0_sign.bin	2ND_03N0_cert.pem
Document Finisher Simple (1000)	2ND_03RW_sign.bin	2ND_03RW_cert.pem
4000 Document Finisher Booklet	2ND_03RL_sign.bin	2ND_03ND_cert.pem
3000 Document Finisher Punch Unit	2RH_03NK_sign.bin	2RH_03NK_cert.pem
Inner Document Finisher	2ND_03RD_sign.bin	2ND_03RD_cert.pem
Inner Punch	2ND_03RF_sign.bin	2ND_03RF_cert.pem
Document Processor Main (with multi-feed detection)	2V8_03SR_sign.bin	2V8_03SR_cert.pem
Document Processor Main (CIS)	2ND_03R8_sign.bin	2ND_03R8_cert.pem
Document Processor Main (REV)	2ND_03R7_sign.bin	2ND_03R7_cert.pem
Document Processor Main (LOW)	2ND_03RJ_sign.bin	2ND_03RJ_cert.pem
Sub Panel Board (Sub Panel)	2ND_SPNL_sign.bin	2ND_SPNL_cert.pem
Sub Panel Board (Configuration File)	2ND_SPCF_sign.bin	2ND_SPCF_cert.pem

Note for upgrading the firmware

In case that a USB drive takes time to get ready, the time may be longer than the main unit starts up and fail firmware update mode.

Maintenance mode U025 firmware update (S): Execute the firmware upgrade at Firmware Update (Security)

* In order to strengthen the security, it is necessary to perform the following.

1. In case if the security level is set as "Very High", it is necessary to execute U258 for the firmware update.

2. Administrator Authentication on Firmware Update is set as On, once going into maintenance mode, login user name and the password is requested to enter.

Preparations

Unzip the PACK of the downloaded firmware and save it directly under the USB drive.

In case of saving multiple firmware PACKs to the same USB drive, create, a folder and save it in that folder.

The name of the folder to create is [FWUP_02XF].

1 After turning the power switch (a) on and the screen is properly displayed, turn the power switch (a) off.

2 Insert the USB drive (b) with the firmware into the USB drive slot and turn the oiwer switch (a) on.

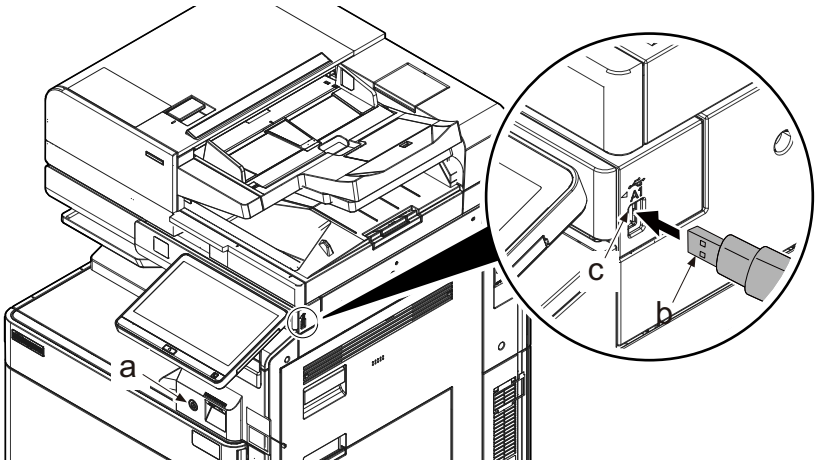

- Several kinds of firmware updates are processed in parallel.

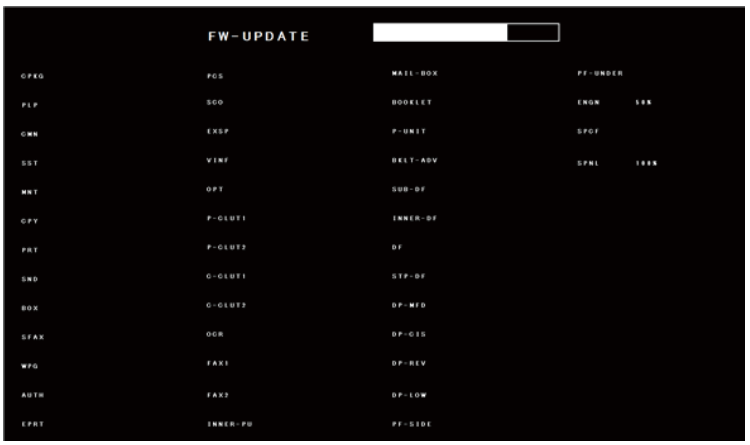

- "Completed" comes up as the firmware update is complete.

- Check if the new firmware versions are displayed.

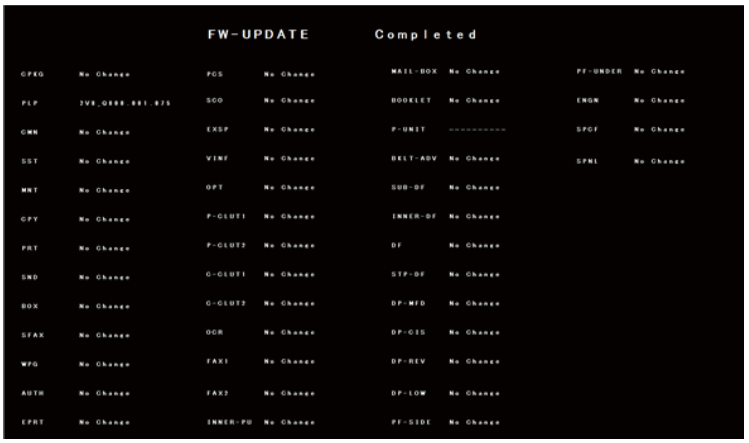

- In case of no corresponding master file, "No Change" is displayed.
  "*" is displayed after the firmware version update that has been skipped.
- "----------" is displayed when the FAX PWB, the option equipment, etc. is not installed.

In case of an error



- When an error occurs during the firmware upgrade, the process is immediately interrupted and the error code and error message come up.

Error code	Error content	Error code	Error content
0000	Other	S000	Other signature verification error *1
0100	No Master file	S001	Signature verification file is inadequate
0200	Version mismatch of the master file	N001	Network connection failed. *2 (There is no upgrade target)
03xx	No Download File (No.xx)		
04xx	File (No.xx) Checksum mismatch	N002	Network connection failed. *3 (There is an upgrade target)
05xx	File (No.xx) Preparation failure		
06xx	File (No.xx) Oversize		
08xx	File (No.xx) Writing failure		

The file numbers in this table are for “xx” in the error codes.

File number	Target	File number	Target
01	Product Line Platform	09	Fax App
02	Common Basic App	10	Web Page App
03	System Setting App	11	Auth App
04	Maintenance App	12	External Print App
05	Copy App	13	Panel Control System App
06	Print App	15	Service Cooperation App
07	Send App	16	Extension Service Platform
08	Box App	17	Package Version Info

*1: Including the expired FM certificate

*2: Automatically restarted for the normal start-up since the normal start-up is available next time.

*3: Transferred to the USB upgrade mode instead of the automatic restart since the normal start-up may not be available next time.

Indication of the signature verification result

Official signature verification file	Indicate the result
Both certificate and signature files exist and verification is successful.	Version number
Both certificate and signature files exist but verification is unsuccessful.	S000
Neither certificate nor signature files exist. Or either of them does not exist.	S001

1 Unplug the power cord and disconnect the USB memory.

2 Plug in the power cord and turn the power switch (a) on.

3 Check that the "Home" screen is displayed and then turn the power switch (a) off.

IMPORTANT

Never turn the power switch (a) off or disconnect the USB drive (b) during the firmware update.

Safe-Update

When the firmware update was interrupted by power shut-off or disconnecting the USB drive during the firmware update, then try again at the next power-on.

Turn the main power on again while the USB drive is installed.

* The firmware update that was already completed before power shut-down is skipped.

6 Maintenance mode

6 - 1 Maintenance mode

The machine is equipped with a maintenance function which can be used to maintain and service the machine.

(1)Execute the maintenance mode

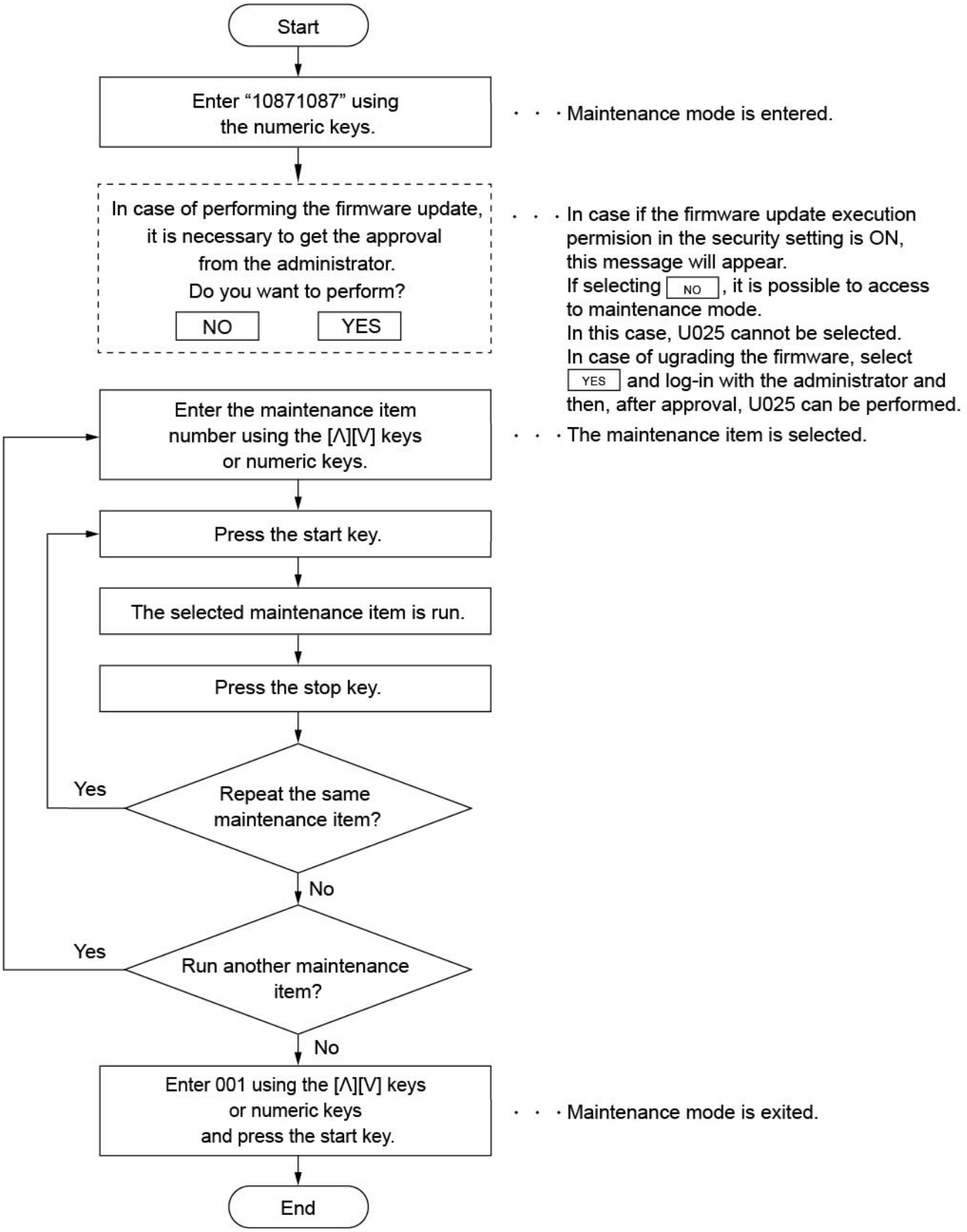

(2)Maintenance modes list

Section	Maintenance item	Outline
General	U000 Printing Maintenance Report	Print the reports and export them to a USB drive.
	U001 Exiting the maintenance mode	Exit from the maintenance mode
	U002 Set Factory Default	Initialize to the factory-default setting
	U003 Setting the telephone number of the service person	Set the telephone number of the service person.
	U004 Machine Number	Display the machine serial number and setting
	U010 Setting the maintenance mode ID	Set the maintenance mode ID
	U019 Firmware Version	Display the firmware version of the PWB
Initialization	U021 Initializes Memory	Initialize the backup RAM
	U024 Formatting an HDD	Format the HDD
	U025 Firmware update (S)	Update the firmware
	U026 Retrieve the backup data	Retrieve the backup data
Drive Paper feed Conveying Cooling	U030 Motor operation check	Drive the drive motor
	U031 Check the conveying switch	Check the conveying switch On/Off
	U032 Clutch operation check	Check the paper conveying clutch operation
	U033 Solenoid operation check	Drive the paper conveying and toner supply solenoids
	U034 Paper timing data adjustment	Adjust the lead edge timing and the center line
	U035 Folio size setting	Set the Folio paper length and width.
	U037 fan operation check	Drive each fan.
	U051 Registration paper loop amount adjustment	Adjust the paper loop level between the rollers
	U053 Adjusting the motor speed	Set speed correction of each motor
	U059 Fan mode setting	Set the drive mode of the conveying fan
Optical	U061 Lamp lighting check	Turn on the exposure
	U065 Adjusting the magnification for table scanning	Adjust the magnification for table scanning
	U066 Adjusting the table scanning timing	Adjust the lead edge timing for table scanning
	U067 Adjusting the table scanning center line	Adjust the center line for table scanning
	U068 DP scanning position adjustment	Adjust the starting position for DP scanning
	U070 DP magnification adjustment	Adjust the magnification for DP scanning
	U071 Adjusting the DP leading edge Timing	Adjust the DP scan timing
	U072 Adjusting the DP original center	Adjust the center line for DP scanning
	U073 Scanner motor operation check	Scan in the specific condition
Optical	U074 Adjust DP Input	Set the image density correction for scanning
	U075 Adjust DP Slant	Set the reading density correction coefficient for DP read only

Section	Maintenance item	Outline
	U087 Setting the DP scanning position change operation	Change the scanning position as the corrective measure for the black lines
	U089 MIP-PG chart output	Output MIP-PG chart
	U091 void lines correction setting	Set the void lines detection threshold
	U099 Original size detection setting	Check the original size detection and set the detection threshold
High voltage system	U100 Main high voltage adjustment	Adjust the drum surface potential
	U101 Adjust 1st Transfer Voltage Output	Set and output the primary transfer bias voltage
	U106 Secondary transfer voltage adjustment	Set the secondary transfer bias voltage correction
	U107 Primary transfer cleaning voltage adjustment	Set the transfer belt cleaning bias voltage
	U108 Separation Shift bias adjustment	Set the transfer belt unit cleaning control voltage
	U110 Drum counter	Display the drum counter
	U115 LSU driving time	Display the LSU drive time
	U117 Drum unit number	Display the drum number
	U118 Drum unit history	Display the drum history
	U119 Setting the drum	Set the initial LSU laser power
	U120 Drum drive distance counter	Display the distance counter of drum
	U122 Display the primary transfer unit number	Display the primary transfer unit number
	U123 Primary transfer unit history	Display the machine number and the primary transfer unit counter history
	U127 Clearing the transfer count	Display the transfer count
	U128 Transfer timing adjustment	Adjust the transfer high-voltage output ON/OFF timing
Developer system	U131 Toner sensor control voltage adjustment	Confirm the toner sensor control voltage
	U132 Forcible toner supply operation	Execute the toner supply into the toner control level
	U133 Developer Refresh	Developer refresh setting
	U135 Checking the toner motor operation	Drive the toner motor
	U136 Toner level detection setting	Set the number of printable pages at toner near end
	U139 Temperature, humidity	Display internal/external temperature and humidity
	U140 Developer bias adjustment	Adjust the developer bias values or set the high altitude mode.
	U147 Setting the toner applying mode	Set the removal mode of overcharge toner
	U148 Drum refresh mode setting	Set auto drum refresh
	U155 Toner sensor output	Display the toner sensor output
	U157 Developer drive time	Display/Set the developer drive time
	U158 Developer counter	Display/Set the developer counter
	U159 Toner container function setting	Set the toner container lock and waste toner box
Fuser	U161 Fuser temperature adjustment	Set the control temperature of fuser unit

Section	Maintenance item	Outline
	U164 Fuser unit history	Display the machine number and the fuser unit history
	U165 Fuser unit number	Display the fuser unit number
	U167 Clearing the fuser count	Display/Clear the counts
	U169 Setting the fuser power source	Display/Set the IH PWB control voltage
	U193 Fuser drive control setting	Change fuser drive control setting
	U199 Fuser temperature	Monitor the fuser temperature
Operation section/ Support Equipment	U200 All LEDs lighting	Light all the LEDs on the operation panel
	U201 Initializing the touch screen	Correct the X and Y axis position of the touch screen
	U203 Check DP operation	Check the DP paper conveying operation
	U204 Key card/key counter setting	Key card/Key counter connection setting
	U206 Set the coin vendor	Set the coin vendor
	U207 Operation key check	Check the operation panel key
	U208 Setting the paper size for the side feeder	Set the paper size of side deck
	U211 Enhancement unit connection setting	Set the connection of the enhancement units
	U221 USB host lock function setting	Set USB Host lock function ON/OFF
	U222 Setting the IC card type	Set the ID card type
	U223 Operation panel lock	Set On/Off of the operation unit lock
	U224 Setting Original Panel Display	Set the opening screen
	U230 Optional device serial number	Display the optional device serial number
	U234 Setting destination for punch	Set the punch destination
	U237 Finisher eject volume limit	Set the main tray stack capacity
	U240 Finisher operation check	Check the drive operation
	U241 Finisher switch check	Check the switch operation
	U243 Checking the DP motor	Drive the PF motor and solenoid
	U244 DP switch check	Drive the DP sensor
	U246 Finisher adjustment	Set the finisher adjustment value
	U247 Paper feed operation check	Drives the PF motor and clutch
Mode Setting	U250 Set Maintenance Counter Pre-set	Change the preset value
	U251 clearing the maintenance counter	Display/Clear/Change the counter value
	U252 Destination	Set the machine operation and indication to the specification of the destination
	U253 Switching the double/single counts	Change the threshold of the single/double count
	U260 Switching the timing for copy counting	Set the count up timing
Mode Setting	U265 Setting by destination	Set the OEM code
	U271 Setting the page count unit	Set the long paper count unit

Section	Maintenance item	Outline
	U278 Delivery date setting	Register delivery date
	U285 Set Service Status Page	Set the contents of Service status page
	U286 Optional language setting	Add/Delete/Change the optional language
	U287 Automatic recovery function	Set the auto recover function
	U323 Abnormal temperature and humidity notification setting	Switch the indication mode of the abnormal temperature/humidity detection
	U325 Paper interval setting	Set the print interval in high coverage
	U326 Black line cleaning indication	Set the cleaning guidance
	U327 Cassette heater control setting	Select the cassette heater control setting
	U332 Adjusting the black coverage coefficient	Set the coefficient of the custom size
	U339 Drum heater ON mode setting	Set the drum heater
	U340 Setting the applied mode	Set the memory allocation
	U341 Printer cassette setting	Set the cassette to printer output only
	U343 Duplex priority mode	Switch the duplex printing priority mode
	U345 Setting the value for maintenance due indication	Set the maintenance timing display
	U346 Selecting Sleep Mode	Set the BAM related sleep mode
Image processing	U402 margin adjustment	Adjust the scan image margins
	U403 Adjusting margins for scanning an original on the contact glass	Adjust the margin for scanning originals
	U404 Adjusting margins for scanning an original from the document processor	Adjust the margin for scanning originals
	U407 Adjusting the writing timing (Duplex/ Reversal)	Adjust the write timing for 180 degree rotation copy
	U410 Adjusting the halftone automatically	Execute auto halftone adjustment and retrieve correction data
	U411 Scanner auto adjustment	Execute auto scanner/DP adjustment
	U412 Adjusting the uneven density	Correct the image density unevenness from LSU
	U415 Adjusting the print position automatically	Execute the auto print position adjustment
	U425 Set Target	Input the Lab value on the adjustment original
	U451 Set Charge Amount Estimation	Set and check the estimation of the charge amount
	U460 Sensor adjustment	Correct the threshold of multi feed sensor in DP
Image processing	U464 ID correction setting	Set the ID correction
	U465 ID correction data	Display the control value of laser power after the ID correction
	U469 Primary transfer unit initial setting	Set the primary transfer unit
	U470 Setting the JPEG compression rate	Set the JPEG compression rate
	U474 Checking the LSU cleaning	Check the LSU cleaning operation and Set the cleaning cycle
	U485 Image process mode setting	Set the image processing

Section	Maintenance item	Outline
	U520 Remote Service Setting	Set the remote service
FAX	U600 Initialize: All Data	Initialize all data and image memory.
	U601 Initialize: Keep data	Initialize the software switches of other than the machine data
	U603 User data 1	Set the fax user
	U604 User data 2	Set the fax user
	U605 Data clear	Initialize the FAX communication data
	U610 System 1	Set the number of scrap lines in actual size receiving or auto size reduction.
	U611 System 2	Set the number of adjustment lines for auto size reduction.
	U612 System 3	Set the FAX communication operation
	U615 System 6	Set the printing size and receiving image size
	U620 FAX system	Set the signal detection method for remote switching
	U625 Communication settings	Set the auto redialing interval and number
	U630 Communication control procedures 1	Set the FAX communication
	U631 Communication control procedures 2	Set the FAX communication
	U632 Communication control procedures 3	Set the FAX communication
	U633 Communication control procedures 4	Set the FAX communication
	U634 Communication control procedures 5	Set the acceptable error for TCF signal
	U640 Communication time setting 1	Set the detection time by remote switching mode
	U641 Communication time setting 2	Set the time-out for the fax communication
	U650 Modem 1	Set the G3 transmission cable equalizer
	U651 Modem 2	Set the modem output level
	U660 Call Setting	Set the NCU (network control unit)
	U670 List output	Output the fax communication data list
	U671 FAX backup data clear	Clear the FAX backup data
FAX	U695 FAX function customization	Set the batch transmission
	U698 Setting the maintenance port	Set the applicable port
	U699 Software switch: Set	Set the software switches individually
Others	U901 Clearing the counters by paper source	Display/Clear the counters by paper source
	U903 Clearing the jam counter	Display/Clear number of jam by the trigger code
	U904 Clearing the service call error counter	Display/Clear the service call error and system error counts
	U905 Optional counter	Display the counts
	U906 Resetting the partial operation	Reset the failure isolation

Section	Maintenance item	Outline
	U908 Total counter	Display the FAX count
	U910 Black rate data	Clear the print coverage data and period
	U911 Counter by media type	Display/Clear the counts by media type
	U917 Read/Write Backup Data	Read/Write the backup data to USB drive
	U920 Billing counter	Display the billing count
	U927 Clearing all the billing/life counters	Clear the billing count and machine life count
	U928 Machine life counter	Display the machine life count
	U930 Clear the main charger roller counts	Display/Set the MC roller count
	U933 Setting the maintenance mode log	Set the maintenance mode log
	U935 Maintenance relay board	Set when the relay board is faulty
	U942 DP loop amount setting	Adjust the paper loop level in DP
	U952 Maintenance mode workflow	Execute the work flow for maintenance
	U964 Retrieve Log Flow	Transfer the log files from HDD to USB drive.
	U977 Setting the data capture mode	Store the data sent to the main unit into USB drive
	U981 Set/Check CBM Alert Data	Check and change the data of the CBM related information
	U984 Developer unit number	Display the developer unit number
	U985 Developer unit history	Display the developer unit number history
	U989 HDD scan disk	Execute the HDD scan disk
	U990 Clearing the scanner lighting time	Display the accumulated DP CIS lighting time
	U991 Scanner counter	Display the scanner count

(3)Content of the maintenance mode

U000 Printing Maintenance Report

(Message: Mainte Report)

Contents

Print the list of the current settings of the maintenance items, paper jam and service call error. Output the event log and service status page.

Also, sends output data to USB drive.

Purpose

Check the current settings of the maintenance items, paper jam and service call error occurrences.

Before initializing or replacing the backup memory, print the list of the current settings of the maintenance items to reenter the settings after initialization or replacement.

Method

1 Press [Start] key.

2 Select the item to output.

Items	Output list
Maintenance	Maintenance mode setting list
User Status	Output User Status Page
Svc Status	Output Service Status Page
Event	Output the event log report
NW Status	Output Network Status Page
Fax Sys Conf *1	Print the list of local telephone number, confidential boxes, firmware versions
Fax Act List *1	Output error history and commutation line list
Fax Self Sts *1	Output the maintenance mode and fax settings
Fax Pcl List *1	Output the fax protocol list
Fax Err List *1	Output error list
Config List	Output setting information list
LLU Report	Output LLU report
All	All reports output

*1: Only if fax is installed

3 Press [Start] key and output the list.

NOTE

If A4/Letter paper is available, it is output with this size. Select an alternative cassette in case of missing A4 or Letter paper size. Outputting status is displayed.

Method: when sending output data to USB drive

1 Press [Start] key.

2 Insert USB drive into the USB drive slot.

3 Select the item to send.

4 Select [USB(Text)] or [USB(HTML)].

Items	Output list
Print	Print the reports
USB(Text)	Destination: Send to USB drive (Text format)
USB(HTML)	Destination: Send to USB drive (HTML format)

5 Press [Start] key.

The data is sent to the USB drive.

NOTE

LLU Report data can not be transfered to the USB drive. Only print out is available.

Completion

1 Press [Stop] key.

Return to the screen for selecting maintenance number.

Detail of Unit History Report

Unit History Report

KYOCERA

MFP
TASKalfa 5004i
Firmware version XXX_S000.00X.XXX 2020.05.XX

ZW20Y0XXXX
2020/05/XX 15:15
[XXX_1000.00X.00X][XXX_1100.00X.00X][XXX_7200.00X.00X]

Machine No.:ZW20Y0XXXX

(1)	(2)	(3)	(4)	(5)
Drum Unit	**Serial/Counter/History**			
	FR500Z6XXXXX	55000	ZW20Y0XXXX	0
			----------	0
			----------	0
	----------	0	----------	0
			----------	0
			----------	0
	----------	0	----------	0
			----------	0
			----------	0
Develop Unit	**Serial/Counter/History**			
	FR600Z6XXXXX	55000	ZW20Y0XXXX	0
			----------	0
			----------	0
	----------	0	----------	0
			----------	0
			----------	0
	----------	0	----------	0
			----------	0
			----------	0
Transfer Unit	**Serial/Counter/History**			
	FR700Z6XXXXX	55000	ZW20Y0XXXX	0
			----------	0
			----------	0
	----------	0	----------	0
			----------	0
			----------	0
	----------	0	----------	0
			----------	0
			----------	0
Fuser Unit	**Serial/Counter/History**			
	FR800Z6XXXXX	55000	ZW20Y0XXXX	0
			----------	0
			----------	0
	----------	0	----------	0
			----------	0
			----------	0
	----------	0	----------	0
			----------	0
			----------	0

(6)	**Charger roller unit**	**Counter**
		90

(7)	**System**	
	Counter	582/1
	Version	2KV_D100.003.001/-/-/-/-/-/ 3V4_9000.001.008///

1

Unit History Report

KYOCERA

MFP

ZW20Y0XXXX

TASKalfa 5004i

2020/05/XX 15:15

Firmware version XXX_S000.00X.XXX 2020.05.XX

[XXX_1000.00X.00X][XXX_1100.00X.00X][XXX_7200.00X.00X]

Machine No.:ZW20Y0XXXX

(8) RP Code

0005 0F9D D178
0005 0F9D D5B2
0004 04E3 3C78
0005 0F05 3F31

Contents of Unit History Report

No.	Title	Contents
1	Unit Name	Name of the unit
2	Unit Serial number	Unit serial number that is actually installed (Was installed in the past) (Descending order: Serial no. of 3 history information) (The top is the latest)
3	Unit counter value	Unit counter value that is actually installed (Was installed in the past) (For the past unit, the counter value at the time of replacement)
4	Main unit serial number	Main unit serial number that the unit is installed (Descending order: 3 history information of the unit installation)
5	Unit counter value	Unit counter value when start using the unit with the applicable main unit
6	Charger roller unit counter value	Charger roller unit counter value that is actually installed
7	Boot count, Sample set count, etc.	Display reset count/sample set count/various type of the version
8	RP code	Acquires the last two update dates of the main software version and the engine software version, encodes them, and displays them The contents to be displayed are the following in order from the top -Encoded engine software version and the last updated date -Encoded main software version and the last updated date -Encoded engine software version and the one previous updated date -Encoded main software version and the one previous updated date

Detail of event log

Event Log

KYOCERA

MFP

ZW20Y0XXXX

TASKalfa 5004i

(2) 2020/05/XX 15:15

(1) Firmware version XXX_S000.00X.XXX 2020.05.XX [XXX_1000.00X.00X] [XXX_1100.00X.00X] [XXX_7200.00X.00X]

(3) **(4)** **(5)**

(6) Machine No.:ZF48600001 **(7)** Total Life Count:100000

(8) Paper Jam Log

#	Count.	Event Descriprions	Date and Time
12	55555(5558)	0501.01.08.01.00	2014/02/12 17:30
11	44444(4448)	4002.01.08.01.00	2014/02/12 17:30
10	33333(3338)	0501.01.08.01.00	2014/02/12 17:30
9	22222(2228)	4002.01.08.01.00	2014/02/12 17:30
8	111111(1118)	0501.01.08.01.00	2014/02/12 17:30
7	9999(998)	4002.01.08.01.00	2014/02/12 17:30
6	8888(88	0501.01.08.01.00	2014/02/12 17:30
5	7777(7	0501.01.08.01.00	2014/02/12 17:30
4	6666(6	0501.01.08.01.00	2014/02/12 17:30
3	5555(5	0501.01.08.01.00	2014/02/12 17:30
2	4444(44	0501.01.08.01.00	2014/02/12 17:30
1	3333(338)	4002.01.08.01.00	2014/02/12 17:30

0501.01.08.01.00
(a) (b) (c) (d) (e)

(9) Service Call Log

#	Count.	Service Code	Data and Time
8	111111(1118)	01.00.6000	2014/02/12 17:30
7	9999(998)	01.01.2100	2014/02/12 17:30
6	8888(888)	01.01.0000	2014/02/12 17:30
5	7777(778)	01.00.6000	2014/02/12 17:30
4	6666(668)	01.00.2100	2014/02/12 17:30
3	5555(558)	01.01.4000	2014/02/12 17:30
2	4444(448)	01.00.6000	2014/02/12 17:30
1	3333(338)	01.00.2100	2014/02/12 17:30

(10) Maintenance Log

#	Count.	Item.	Data and Time
2	5555(558)	02.01	2014/02/12 17:30
1	4444(448)	02.02	2014/02/12 17:30

(11) Toner Log

#	Count.	Item.	Serial Number	Data and Time	Detail
4	66666(6668)	01.00	0123456789ABCDEF	2014/02/12 17:30	A.000
3	55555(5558)	01.00	0123456789ABCDEF	2014/02/12 17:30	B.010
2	44444(4448)	01.00	0123456789ABCDEF	2014/02/12 17:30	B.100
1	33333(3338)	01.00	0123456789ABCDEF	2014/02/12 17:30	C.029

1

Event Log

KYOCERA

MFP

ZW20Y0XXXX

TASKalfa 5004i

2020/05/XX 15:15

Firmware version XXX_S000.00X.XXX 2020.05.XX

[XXX_1000.00X.00X] [XXX_1100.00X.00X] [XXX_7200.00X.00X]

Machine No.:ZF48600001 Total Life Count:100000

(12) Counter Log

(f)

J0000:	0	J4202:	0	J7300:	0
J0100:	1	J4203:	1	J7310:	1
J0101:	11	J4204:	1	J7404:	11
J0104:	22	J4205:	0	J7500:	2
J0105:	1	J4208:	1	J7600:	1
J0106:	1	J4209:	11	J7700	0
J0107:	1	J4211:	2	J7710:	1
J0110:	1	J4212:	2	J7800:	1
J0111:	1	J4213:	1	J7810:	2
J0114:	1	J4214:	2	J7900:	1
J0212:	1	J4215:	1	J7901:	1
J0213:	9	J4218:	1	J7902:	0
J0300:	1	J4219:	9	J9000:	1
J0501:	1	J4301:	1	J9001:	1
J0502:	1	J4302:	1	J9002:	2
J0503:	1	J4303:	1	J9004:	1
J0504:	1	J4304:	1	J9005:	1
J0508:	1	J4305:	1	J9226:	2
J0509:	1	J4309:	1	J9007:	1
J0511:	1	J4311:	1	J9008:	1
J0512:	1	J4312:	1	J9009:	2
J0513:	1	J4313:	1	J9010:	1
J0514:	1	J4314:	1	J9011:	1
J0518:	1	J4315:	1	J9020:	2
J0519:	1	J4319:	1	J9030:	1
J0523:	1	J4401:	1	J9110:	1
J0524:	1	J4402:	1	J9210:	2
J0533:	1	J4403:	1	J9300:	1
J0534:	1	J4404:	1	J9310:	1
J0555:	1	J4405:	1	J9400:	2
J1403:	1	J4409:	1	J9410:	1
J1413:	1	J4701:	1	J9600:	1
J1414:	1	J4702:	1	J9610:	2
J1604:	1	J4703:	1		
J1614:	1	J4704:	1		
J4002:	1	J4705:	1		
J4003:	1	J4709:	1		
J4004:	1	J4711:	1		
J4005:	1	J4712:	1		
J4012:	1	J4713:	1		
J4013:	1	J4714:	0		
J4014:	1	J4715:	1		
J4015:	1	J4719:	1		
J4101:	1	J4901:	0		
J4102:	1	J4902:	1		
J4103:	1	J4903:	11		
J4104:	1	J4904:	2		
J4105:	1	J4905:	1		
J4108:	1	J4908:	2		
J4109:	1	J4909:	1		
J4111:	1	J4911:	2		
J4112:	1				

(g)

C1020:	1	
CF245:	11(	0)
CF248:	12(	0)
CF345:	13(	0)

(h)

T00:	10
M00:	20
M01:	30

1

Description of event log

No.	Contents
(1)	System version
(2)	System date
(3)	Engine firmware version
(4)	Engine boot version
(5)	Panel main version
(6)	Machine serial number
(7)	Total life counter

<table>
<tr><th>No.</th><th colspan="4">Contents</th></tr>
<tr><td rowspan="11">(8)</td><td colspan="4">Paper Jam Log</td></tr>
<tr><td>#</td><td>Count.</td><td>Event Descriptions</td><td>Date and Time</td></tr>
<tr><td>Up to 16 times are recorded.
All jams are displayed If the last jams are less than 16 times. Older jam is deleted from the Log in case of exceeding 16 times.</td><td>The total page count of paper jam.
Number in ( ) is the color total page counter</td><td>Log code (5 types in hexadecimal)

(a) Cause of paper jam
(b) Paper source
(c) Paper size
(d) Paper type
(e) Paper exit</td><td>Date and time of occurrence</td></tr>
<tr><td colspan="3">(a) Description of paper jam (Hexadecimal)</td></tr>
<tr><td colspan="3">• Refer to "2-2 Paper Misfeed Detection",for the detail of Cause of paper jam. (See page 7-84)</td></tr>
<tr><td colspan="3">(b) Detail of paper source (Hexadecimal)</td></tr>
<tr><td colspan="3">00: MP tray
01: Cassette 1
02: Cassette 2 (Paper feeder)
03: Cassette 3 (Paper feeder)
04: Cassette 4 (Paper feeder)
05: Cassette 5 (Paper feeder)
06 to 09: Reserved</td></tr>
<tr><td colspan="3">(c) Detail of paper size (Hexadecimal)</td></tr>
<tr><td>00: Not specified
01: Monarch
02: Business
03: International DL
04: International C5
05: Executive
06: Letter-R
86: Letter-E
07: Legal
08: A4R
88: A4E
09: B5R
89: B5E
0A: A3</td><td>0B: B4
0C: Ledger
0D: A5R
8D: A5E
0E: A6
0F: B6
10: Commercial #9
11: Commercial #6
12: ISO B5
13: Custom size
1E: C4
1F: Hagaki
20: Oufuku Hagaki
21: Oficio II</td><td>22: Special 1
23: Special 2
24: A3 Wide
25: Ledger Wide
26: Full bleed paper (12x8)
27: 8K
28: 16K-R
A8: 16K-E
32: Statement-R
B2: Statement-E
33: Folio
34: Youkei type 2
35: Youkei type 4</td><td></td></tr>
</table>

<table>
<tr><th>No.</th><th>Contents</th></tr>
<tr><td>(8)cont.</td><td>Paper Jam Log</td></tr>
<tr><td></td><td>(d) Detail of paper type (Hexadecimal)
<table>
<tr><td>01: Plain
02: Transparency
03: Preprinted
04: Labels
05: Bond
06: Recycled
07: Vellum
08: Rough
09: Letterhead</td><td>0A: Color
0B: Prepunched
0C: Envelope
0D: Cardstock
0E: Coated
0F: 2nd side
10: Media 16
11: High quality</td><td>15: Custom 1
16: Custom 2
17: Custom 3
18: Custom 4
19: Custom 5
1A: Custom 6
1B: Custom 7
1C: Custom 8</td></tr>
</table></td></tr>
<tr><td></td><td>(e) Detail of paper source (Hexadecimal)</td></tr>
<tr><td></td><td>01: Main unit face down (FD)
02: Main unit face up (FU)/1000-sheet finisher (FU)/
4000-sheet finisher tray B (FU)
03: 1000-sheet finisher (FD)
4000-sheet finisher tray A (FD)
05: Job separator tray
07: 4000-sheet finisher tray B (FD)
0A: Folding unit tray
0B: MT tray 1 (FD)
0C: MT tray 1 (FU)
15: MT tray 2 (FD)
16: MT tray 2 (FU)
1F: MT tray 3 (FD)
20: MT tray 3 (FU)
29: MT tray 4 (FD)
2A: MT tray 4 (FU)
33: MT tray 5 (FD)
34: MT tray 5 (FU)
3D: MT tray 6 (FD)
3E: MT tray 6 (FU)
47: MT tray 7 (FD)
48: MT tray 7 (FU)</td></tr>
</table>

<table>
<tr><th>No.</th><th colspan="4">Contents</th></tr>
<tr><td rowspan="3">(9)</td><td colspan="4">Service Call Log</td></tr>
<tr><td>#</td><td>Count.</td><td>Service Code</td><td>Date and Time</td></tr>
<tr><td>Up to 8 times of Self diagnostics errors are recorded.
All the Self diagnostics error are displayed unless occurrences are 8 times or less.</td><td>Total page count at the time of self diagnostic error.
Number in ( ) is the color total page counter</td><td>The first two digits (Identification)
01: Service call/System error
02: Unit replacement

Next two digits (Auto reboot information)
00: No auto reboot
01: Auto reboot

Last four digits
Self diagnostic error code
(See page page 7-250)

(Example) 01.00.6000
01 for Self diagnostic error, 00 for no auto reboot and 6000 for Self diagnostic error code.
The auto reboot function is set in U287</td><td>Date and time of occurrence</td></tr>
<tr><td rowspan="3">(10)</td><td colspan="4">Maintenance Log</td></tr>
<tr><td>#</td><td>Count.</td><td>item</td><td>Date and Time</td></tr>
<tr><td>Up to 8 times are recorded. All occurrences are displayed in case of less than 8 times.</td><td>Total page count at the time of a maintenance item replace.
Number in ( ) is the color total page counter</td><td>Item code for the maintenance replace (2 items for 1 byte value)

First byte (Replacing item)
02: Maintenance kit

Second 1 byte (replacement item type)
01:MK-6345</td><td>Date and time of occurrence</td></tr>
</table>

<table>
<tr><th>No.</th><th colspan="4">Contents</th></tr>
<tr><td rowspan="4">(11)</td><td colspan="4">Toner Log</td></tr>
<tr><td>#</td><td>Count.</td><td>Item. Serial Number</td><td>Date and Time</td></tr>
<tr><td>UP to 32 times are recorded. All occurrences are recorded in case of less than 32 times.
The container information is updated when replacing container.
If the serial number does not change at the replacement, then the information will not be updated.</td><td>The total page count at the time of toner container replacement. (both genuine and non-genuine toner)
Number in ( ) is the color total page counter.
Start count for Detail A and end count for Detail B and C.</td><td>log code
First 1 byte (Replacing item)
01: Genuine product
02: Non-genuine product

Next 1 byte (type of replacement item)
00: Black

Last 16 digits
Display the serial number of the toner container.

• When detecting non-genuine toner, no serial number is displayed.</td><td>Date and time of occurrence
Start date for Detail A and end date for Detail B and C.</td></tr>
<tr><td colspan="4">Detail

A: Container information currently using
B: Container information used in the past (it was new container)
C: Container information used in the past (it was used or non genuine container)
Next 3 digits
Toner amount (%) at start for Detail A
Toner amount (%) at end for Detail B and C</td></tr>
</table>

<table>
<tr><th>No.</th><th colspan="4">Contents</th></tr>
<tr><td rowspan="3">(12)</td><td colspan="4">Counter Log</td></tr>
<tr><td>(f) Paper jam</td><td>(g) Self diagnostic error</td><td>(h) Replacement for maintenance Item</td><td></td></tr>
<tr><td>Indicate the log counter of paper jams by causes.
See Paper Jam Log.

• All causes are displayed even no record.</td><td>Indicate the log counter of self diagnostics errors by causes.

Service call/System error includes a number of auto reboots either.

(Example) CF245: 4 (2)
System Error 245 occurred four times and auto reboot twice.</td><td>Indicate the log counter by the maintenance replacing items.

T: Toner container
00: Black

M: Maintenance kit
00:MK-6345

Example: T00: 1
The toner container (Black) replaced once.

Toner container replacement log counts the time of replacement since the 1st container (genuine toner only).
If installing the same toner container twice or used toner container, all of them are counted.</td><td>Consist of three log counters, paper jams, self diagnostics errors, and maintenance replacement items.</td></tr>
</table>

Detail of service status page

Service Status Page

MFP

TASKalfa 5004i

KYOCERA

(2) **ZW20Y0XXXX**

(3) 2020/05/XX 15:15

(4) [2.1.10]

(1) Firmware version XXX_S000.00X.XXX 2020.05.XX [XXX_1000.00X.00X] [XXX_1100.00X.00X] [XXX_7200.00X.00X]

(5) **(6)** **(7)**

Controller Information

Memory Status

(8) Total Size 4.5 GB

Time

(9) Local Time Zone

GMT Greenwich Mean Time: Dublin, Edinburgh, Lisbon, London

(10) Date and Time 05/XX/2020 15:15

(11) Time Server

Installed Options

(12)	Document Processor	Dual Scan
(13)	Paper Feeder	Cassette (1500 x 2)
(14)	Side Feeder	Not Installed
(15)	Hard Disk	Installed
(16)	SD Card	Installed
(17)	Finisher	Not Installed
(18)	Mail Box	Not Installed
(19)	Job Separator	Not Installed
(20)	Card Authentication Kit (B)	Not Installed
(21)	Internet FAX Kit(A)	Not Installed
(22)	UG-33	Not Installed
(23)	UG-34	Not Installed
(24)	USB Keyboard	Not Connected
(25)	USB Keyboard Type	US-English
(26)	Scan extention kit(A)	Not Installed
(27)	Inner Shift Tray	

(28) **Print Coverage**

Average (%) / Usage Page(A4/Letter Conversion)

(29) Total
K: 6.26 / 14.00

(30) Copy
K: 13.25 / 5.00

(31) Printer
K: 2.38 / 9.00

(32) FAX(Total)
K: 0.00 / 0.00

(33) Period (2020/XX/XX - 2020/XX/XX 15:15)

(34) Last Page (%) 0.00

(35) Last Job (%) 0.00

(36) **FRPO Status**

User Top Margin	A1+A2/100	0.00
User Left Margin	A3+A4/100	0.00
User Page Length	A5+A6/100	0.00
User Page Width	A7+A8/100	0.00
Reserved	B0	00
Default Pattern Switch	B8	00
Page Orientation	C1	00
Default Font Number	C5*10000+C2*100+C3	00000
PCL Font Switch	C8	00
Reserved	D6	03
Host Buffer Size	H8	05
FF Time Out	H9	06
Reserved	I5	01
Reserved	I6	00
Zoom	J0	00
KIR Mode	N0	02
Duplex mode	N4	00
Sleep Timer	N5	10
EcoPrint Mode	N6	00
Reserved	N7	00
Print Resolution	N8	03
Default Emulation	P1	09
CR/LF Action	P2/P3	1/1
AES Mode	P4	01
Alt Emulation	P5	06
AES Option 1/2	P7	11
Command Recognition	P9	82
Default Paper Output	R0	01
Default Paper Size	R2	00
Reserved	R3	00
Default Paper Source	R4	00
Sorter Full switch	S3	00
Override A4/LT	S4	00
Host Buffer Size Rate	S5	01
Wide A4	T6	00
Default Line Spacing	U0+U1/100	6.00
Default Character Spacing	U2+U3/100	10.00
Reserved	U4	01
Country Code/Symbol Set	U6/U7	41/53
Default Pitch	U8+U9/100	10.00
Default Font Height	V0*100+V1+V2/100	12.00
Default Font Name	V3	Courier
Courier/LetterGothic	V9	05
MP Tray Paper Type	X0	01
Cassette 1 Paper Type	X1	01
Cassette 2 Paper Type	X2	01
Cassette 3 Paper Type	X3	01
Cassette 4 Paper Type	X4	01
Cassette 5 Paper Type	X5	01
PCL Paper Source	X9	00
Auto Error Clear	Y0	00
Error Clear Timer	Y1	02
Finishing error	Y3	255
Special Type Act Mode	Y4	01
PDF mode	Y5	00
e-MPS error control	Y6	03

1

Service Status Page

MFP

TASKalfa 5004i

Firmware version XXX_S000.00X.XXX 2020.05.XX

ZW20Y0XXXX

2020/05/XX 15:15

[2.1.10]

[XXX_1000.00X.00X] [XXX_1100.00X.00X] [XXX_7200.00X.00X]

Controller Information

RP Code

(37) 0008 01E2 3177
0008 027A C873
FFFF FFFF FFFF
0008 01E2 31F5

(38) Print Settings

MP Tray Priority	Off

(39) Storage Status

Hard Disk	320GB
SSD	30GB
SD Card	941.0GB

(40) System Firmware(Details)

2XF_Q000.001.146
2XF_QA00.001.146
2XF_R000.001.146
2XF_R100.001.146
2XF_R200.001.146
2XF_R300.001.146
2XF_R400.001.146
2XF_R500.001.146
2XF_R600.001.146
2XF_R700.001.146
2XF_R800.001.146
2XF_R900.001.146
2XF_RB00.001.146
2XF_RD00.001.146
2XF_RA00.001.146
2XF_S100.001.146

Engine Information

(41) NVRAM Version	_Cb26630_Cb26630
(42) MAC Address	00:17:C8:16:84:04
(43) DP Counters	
Total	0

Service Status Page

MFP

TASKalfa 5004i

Firmware version XXX_S000.00X.XXX 2020.05.XX

KYOCERA

ZW20Y0XXXX

2020/05/XX 15:15

[2.1.10]

[XXX_1000.00X.00X] [XXX_1100.00X.00X] [XXX_7200.00X.00X]

1/2 **(89) (90)**

(91) 600/600

(92) 0/50/0/50/

(93) 0000035/0000000/0000035/0000000/0000000/0000000/0000000/
0000035/0000035/0000035/0000035/0000035/0000035/0000013/
0000014/0000014/0000000/0600000/0300000/0150000/
F00/U00/0/1/1/1/0/26/23/0/0/0/0/0/abcde/5/2/0/1/1/ **(94)(95)(96)(97)(98)(99)(100)(101)(102)(103)(104)(105)(106)(107)(108)(109)(110)(111)(112)(113)**

(114) 0000/0000/0000/0000/0000/0000/0000/0000/0000/0000/0000/0000/0000/0000/
0000/0000/0000/0000/0000/0000/0000/0000/0000/0000/0000/0000/

(115) 0000/0100/0500/1000/0000/0100/0500/1000/0000/0100/0500/1000/0000/0100/0500/1000/
0000/0100/0500/1000/0000/0100/0500/1000/0000/0100/0500/1000/0000/0100/0500/1000/
000000000000000/000000000000000/000000000000000/000000000000000/000000000000000/000000000000000/000000000000000/
0000000000000000/
000000000000000/000000000000000/000000000000000/000000000000000/0000000000
000000000000000/000000000000000/0000000000000000/
000000000000000/000000000000000/000000000000000/000000000000000/000000000000000/000000000000000/
000000000000000/000000000000000/000000000000000/000000000000000/000000000000000/000000000000000/000000000000000/
000000000000000/000000000000000/000000000000000/000000000000000/000000000000000/000000000000000/000000000000000/
000000000000000/000000000000000/000000000000000/000000000000000/000000000000000/000000000000000/000000000000000/
000000000000000/000000000000000/0000000000000000/
000000000000000/000000000000000/000000000000000/000000000000000/000000000000000/000000000000000/000000000000000/
000000000000000/000000000000000/000000000000000/000000000000000/000000000000000/000000000000000/000000000000000/000000000000000/
000000000000000/000000000000000/000000000000000/000000000000000/000000000000000/000000000000000/000000000000000/000000000000000/
000000000000000/000000000000000/000000000000000/000000000000000/000000000000000/000000000000000/000000000000000/000000000000000/

(116) 12345678/11223344/00001234abcd567800001234abcd5678/01234567890123456789012345678901/0008/00/07
12345678/11223344/00001234abcd567800001234abcd5678/01234567890123456789012345678901/0008/00/07
12345678/11223344/00001234abcd567800001234abcd5678/01234567890123456789012345678901/0008/00/07
12345678/11223344/00001234abcd567800001234abcd5678/01234567890123456789012345678901/0008/00/07
000000000000000/000000000000000/000000000000000/000000000000000/000000000000000/000000000000000/000000000000000/000000000000000/
000000000000000/000000000000000/000000000000000/000000000000000/000000000000000/000000000000000/000000000000000/000000000000000/
000000000000000/000000000000000/000000000000000/000000000000000/000000000000000/000000000000000/000000000000000/000000000000000/
000000000000000/000000000000000/000000000000000/000000000000000/000000000000000/000000000000000/000000000000000/000000000000000/
000000000000000/000000000000000/000000000000000/000000000000000/000000000000000/000000000000000/000000000000000/000000000000000/
000000000000000/000000000000000/000000000000000/000000000000000/000000000000000/000000000000000/000000000000000/000000000000000/
000000000000000/000000000000000/000000000000000/000000000000000/000000000000000/000000000000000/000000000000000/000000000000000/
000000000000000/000000000000000/000000000000000/000000000000000/000000000000000/000000000000000/000000000000000/000000000000000/
000000000000000/000000000000000/000000000000000/000000000000000/000000000000000/000000000000000/000000000000000/000000000000000/

(117) XXXXXXXX/

(118) [ABCDEFGHIJ] [ ] [ ] [ABCDEFGHIJ]

(119) [ABCDEFGHIJ] [ABCDEFGHIJ]
[ABCDEFGHIJ][ABCDEFGHIJ] **(120) (121)**
[ABCDEFGHIJ][ABCDEFGHIJ] **(122) (123)**

(124) 0/
0/0/12.3/56.7 **(125) (126) (127) (128)**

(129) 1/1/1/0/1/0/0/ 2010/12/15 12:34:56
1/5/ **(130)(131)**
1/1/ **(132) (133)**
1/0/0 **(134)(135)(136)**

(137) ABCDEFGHIJKL/ABCDEFGHIJKL/ABCDEFGHIJKL/ABCDEFGHIJKL/

(138) ABCDEFGHIJKL/ABCDEFGHIJKL/ABCDEFGHIJKL/ABCDEFGHIJKL/

No.	Items	Description
(1)	Firmware Version	-
(2)	Machine serial number	-
(3)	System date	-
(4)	API version of the HyPAS application	
(5)	Engine firmware version	-
(6)	Engine boot version	-
(7)	Panel main version	
(8)	Total memory size	-
(9)	Local time zone	-
(10)	Report output date	Day/Month/Year hour : minute
(11)	NTP server name	-
(12)	Document processor installation	Duplex scan/Dual scan/Not available
(13)	Paper feeder installation	Cassette (500-sheet x2)/Cassette (1500-sheet x2)/Not available
(14)	Side deck installation	Available/Not available
(15)	Hard disk	Available/Not available
(16)	SD memory card	Available/Not available
(17)	Finisher installation	1000-sheet finisher/inner finisher/ 4000-sheet finisher/100-staple finisher/Not available
(18)	Mailbox installation	Available/Not available
(19)	Job separator installation	Available/Not available
(20)	ID Card Authentication Kit	Introduced/Before introduction/Trial
(21)	Availability of the Internet FAX Kit (A)	Installed/Not Installed
(22)	Availability of UG-33	Introduced/ before introduction/trial
(23)	Availability of UG-34	Installed/Not Installed
(24)	USB keyboard connection status	Connected/Not connected
(25)	Type of the USB keyboard	US-English/US-English with Euro symbol/German/French
(26)	Availability of the Scan extension kit (A)	Introduced/ before introduction/trial
(27)	Inner shift tray	Installed/Not Installed
(28)	Print coverage	Print Coverage provides just a reference of toner consumption and is not actual toner consumption.
(29)	Average coverage for total	Black/Cyan/Magenta/Yellow
(30)	Average coverage for copy	Black/Cyan/Magenta/Yellow
(31)	Average coverage for print	Black/Cyan/Magenta/Yellow
(32)	Average coverage for FAX	Black/Cyan/Magenta/Yellow
(33)	Cleared and output date	-
(34)	Coverage on the last page	Black/Cyan/Magenta/Yellow
(35)	Coverage information of the last job	Black/Cyan/Magenta/Yellow

No.	Items	Description
(36)	FRPO setting	-
(36)	RP code	Coding the engine software version and the date of the latest update.
		Coding the main software version and the date of the latest update.
		Coding the engine firmware version and the date of the previous update.
		Coding the main software version and the date of the previous update.
(37)	MP tray priority setting	Off (No setting)/Auto (Auto paper feed)/Always (All times)
(38)	Storage availability	Hard disk (HDD)/SSD
(39)	System firmware (Detail)	-
(40)	NVRAM version	_ 1F3 1225 _ 1F3 1225 (a) (b) (c) (d) (e) (f) (a) Consistency of the current firmware version and the database _ (underscore): OK * (Asterisk): NG (b) Database version (c) The oldest time stamp of database version (d) Consistency of the present software version and the ME firmware version _ (underscore): OK * (Asterisk): NG (e) ME firmware version (f) The oldest time stamp of the ME firmware version It is normal in conditions of; (a) and (d) are underscored, (b) and (e) are same and (c) and (f) are same.
(41)	Mac address	-
(42)	DP counter	Scan counts of DP
(43)	Destination information	-
(44)	Area information	-
(45)	Margin setting	Top margin/Left margin
(46)	L parameters	Integer part of top margin/Decimal part of top margin/Integer part of left margin/Decimal part of left margin
(47)	Life counter (The first line)	Machine life/ Color life/MP tray/Cassette/Paper feeder 1/Paper feeder 2/Paper feeder 3/Paper feeder 4/Paper feeder 5/Duplex
	Life counter (The second line)	Drum unit K/Drum unit C/Drum unit M/Drum unit Y/Primary transfer unit/Secondary transfer roller unit/Developer unit K/ Developer unit C/Developer unit M/Developer unit Y/the main charger roller K/the main charger roller C/the main charger roller M/the main charger roller Y/Fuser unit/Fuser discharge unit
	Life counter (The third line)	Maintenance kit A/Maintenance kit B Maintenance kit D */Maintenance kit E * Maintenance kit A pre-set/Maintenance kit B pre-set

No.	Items	Description
(48)	Panel lock information	F00: OFF F01: Partial lock1 F02: Partial lock2 F03: Partial lock3 F04: Full lock
(49)	USB information	U00: Not Connected U01: Full speed U02: Hi speed
(50)	Paper handling information	0: Paper source select 1: Paper source fixed
(51)	Auto cassette change	0: OFF 1: ON (Default)
(52)	Color printing double count mode	0: All single counts 3: Folio (Less than 330 mm length), Single counts
(53)	Black and white printing double count mode	0: All single counts 3: Folio (Less than 330 mm length), Single counts
(54)	Billing counts timing	0: When secondary paper feed starts 1: When the paper is exit
(55)	Internal temperature	-
(56)	External temperature	-
(57)	External relative humidity	-
(58)	External absolute humidity	-
(59)	Internal humidity	
(60)	LSU1 temperature information	
(61)	LSU2 temperature information	
(62)	Asset Number	-
(63)	Job end timeout	-
(64)	Job end detection mode	0: Detect as one job, even if contained multiple jobs 1: Detect as individual job, dividing multiple jobs at a break in job
(65)	Prescribe environment reset	0: Off 1: On
(66)	SMB mode setting	0: Off 1: On
(67)	Display logo	0: Off 1: On

No.	Items	Description
(68)	Media type properties 1 to 28, except 18, 19, 20 See MDAT command in "Prescribe Commands Reference Manual" for further information.	Weight settings Fuser settings 0: Light 0: High 1: Normal 1 1: Middle 2: Normal 2 2: Low 3: Normal 3 3: Vellum 4: Heavy 1 5: Heavy 2 Duplex settings 6: Heavy 3 0: Disable 7: Heavy 4 1: Enable 8: Heavy 5 9: Extra Heavy
(69)	Calibration information	-
(70)	RFID information (K, C, M, Y)	-
(71)	RFID reader/writer version	-
(72)	Optional paper feeder firmware version	-
(73)	Optional language firmware version	-
(74)	Color table version for printer	-
(75)	Color table 2 version for printer	-
(76)	Color table version for copy	-
(77)	Color table 2 version for copy	-
(78)	Altitude Adjustment setting	0: Normal (0 to 1000m) 1: 1001 to 2000m 2: 2001 to 3000m 3: 3001 to 3500m
(79)	Auto color conversion judgment	0: Off 1: On
(80)	Three tier setting	0: Full-color count display 1: Color coverage count display
(81)	Low coverage setting	0.1 to 100.0
(82)	Middle coverage setting	0.1 to 100.0
(83)	Data sanitization information	FAX Board/Main Memory/Panel Memory/HDD/SSD/Execute time 1: Success 0: Fail -: Not performed or Not installed
(84)	Toner low setting	0: Disabled 1: Enabled
(85)	Toner low detection level	0 to 100 (%)
(86)	Shift limitation setting for one copy original.	0: Disable (Limitation OFF) 1: Enable (Limitation ON)
(87)	Banner print confirmation display setting	0: No display 1: Display every page

No.	Items	Description
(88)	ErP mode setting	0: ErP not available 1: ErP available
(89)	Full-page print mode	0: Normal mode (Factory setting) 1: Full-page mode
(90)	Wake-up mode	0: Off (No wake up) 1: On (Wake up)
(91)	Drum serial number	Black/Cyan/Magenta/Yellow
(92)	Developer serial number	Black/Cyan/Magenta/Yellow

U001 Exiting the maintenance mode

(Message: Exit Mainte)

Contents

Exit the maintenance mode and return to the copy mode.

Purpose

Exit the maintenance mode.

Method

2 Press [Start] key.

Return to copy mode.

U002 Set Factory Default

(Message: Set Factory Def)

Contents

Initialize the backup data.

Purpose

This mode is to use for initializing the backup data.

Execution

1 Press [Start] key.

2 Select [Mode1(All)].

3 Press [Start] key.

Items	Contents
Mode1(All)	Set the machine setting values to the factory default

4 Turn the power switch off.

NOTE

An error code is displayed in case of the initialization error.
When errors occur, turn the power switch off then on, and execute initialization by using maintenance mode U002 again.
Wait more than 5 seconds between the power off and on.

Error code list

Codes	Contents
0002	Initialize failure of setting information
0003	Initialize failure of address book information
0004	Initialize failure of Job accounting information
0005	Initialize failure of Event log/Fax communication log/Job log information
0006	Initialize failure of fax memory transfer/panel program information
0007	Initialize failure of shortcut key information
0008	Initialize failure of fax reserve information
0009	Initialize failure of account information
0010	Back up failure of RP code
0011	Initialize failure of counters in Event log/billing/maintenance category
0012	Initialize failure of coverage counter
0013	Initialize failure of machine life counter information
0014	Initialize failure of engine information
0015	Initialize failure of scanner information
0016	Initialize failure of log verification
0017	Initialize failure of device information
0018	Initialize failure of unit log information

Codes	Contents
0019	Initialize failure of counter information by coverage/Job/CBM alert feeding
0020	Initialize failure of send history information

U003 Setting the telephone number of the service person (Message: Set Tel No.)

Contents

Set phone number that will be displayed at the service call error.

Purpose

Set telephone number for service call at the installation of machine.

Setting

1 Press [Start] key.

2 Input keys are indicated on the touch screen.

3 Input telephone number (15 digits maximum).

4 Press [Start] key to fix the setting.

Completion

1 Press [Stop] key.

Return to the screen for selecting maintenance number.

U004 Machine Number

(Message: Machine No.)

Contents

Set or display the machine serial number.

Purpose

Check the machine serial number

Execute in case of displaying “C0180 machine number mismatch" after replace main or engine PWB.

IMPORTANT

Do not execute U004, or select [Execute] and press [Start] key, if machine serial number in engine PWB is different from main unit serial number. Different machine serial number is overwritten in the main PWB.

Method

1 Press [Start] key.

In case of matching the machine serial number between engine PWB and main PWB,

Items	Contents
Machine No.	Display the machine serial number

In case that the machine serial number in the engine PWB does not match the one in the main PWB

Items	Contents
Machine No. (Main)	Display the machine serial number in the main PWB
Machine No. (Eng)	Display the machine serial number in the engine PWB

Setting

Execute if the serial numbers do not match.

1 Select [Execute].

2 Press [Start] key.

NOTE

Start serial number writing.

3 Turn the power switch off then on.

Wait more than 5 seconds between the power off and on.

Completion

1 Press [Stop] key.

Return to the screen for selecting maintenance number.

U010 Setting the maintenance mode ID

(Message: Set Mainte ID)

Contents

Change the maintenance mode ID for service.

Purpose

Changing the maintenance mode ID makes service activity more secure.

Method

1 Press [Start] key.

2 Select the item to set.

Items	Contents
Change	Enter a new 8-digit maintenance ID
Initialize	Initialize the maintenance mode ID for service

Setting: Change

Items	Contents
New ID	Enter a new 8-digit maintenance ID
New ID (Reconfirm)	Enter a new 8-digit maintenance ID (to confirm)
Execute	Execute the maintenance mode ID for service

Setting: New ID

1 Select [New ID].

2 Press numeric keys (0–9, *, #) to enter a new 8-digit ID.

NOTE

Either [*] or [#] must be included.

3 Press [Start] key to fix the setting.

4 Select [New ID(Reconfirm)].

5 Press numeric keys (0–9, *, #) to enter the new 8-digit ID again.

6 Press [Start] key to confirm.

7 Select [Execute].

8 Press [Start] key to update the maintenance mode ID.

Method: Initialize

1 Select [Initialize].

2 Press [Execute] key.

3 Press [Start] key to initialize the maintenance mode ID.

Completion

1 Press [Stop] key.

Return to the screen for selecting maintenance number.

- Following error code come up in case that new ID has inappropriate manner.

Error code list

Contents	Error message
No "#" or "*" in ID.	ID does not have "#" or "*".
Discrepancy between New ID and New ID (Reconfirm).	ID does not match.
ID is less than 8 digits.	Input 8-digit ID

U019 Firmware Version

(Message: Firm Version)

Contents

Display the firmware version installed in each PWB.

Purpose

Check the firmware version installed in each PWB

Method

1 Press [Start] key.

The firmware version is displayed.

2 Change the screen using [▲][▼] key.

Items	Contents
Controller	Main firmware
CMN App	CMN App firmware
SST App	SST App firmware
MNT App	MNT App firmware
CPY App	CPY App firmware
PRT App	PRT App firmware
SND App	SND App firmware
BOX App	BOX App firmware
FAX App	FAX App firmware
WPG App	WPG App firmware
AUTH App	AUTH App firmware
EPRT App	EPRT App firmware
PCS App	PCS App firmware
HOME App	HOME App firmware
SCO App	SCO App firmware
PLP	PLP firmware
EXSP	EXSP firmware
Version Info	Version Info firmware
RFID	RFID firmware
OCR	OCR
Sub MMI	Sub MMI firmware
Sub MMI Boot	Sub MMI boot
Sub MMI Conf	Sub MMI Configuration firmware
Engine	Engine firmware
Engine Boot	Engine boot
Scanner	Scanner firmware
Scanner Boot	Scanner boot
HyPAS EMB API	HyPAS - Embedded API firmware
Option Language	Option language firmware
Super Resolution	Super Resolution firmware
Ext Handwritten	Ext Handwritten firmware
DP *2	Document processor firmware
DP Boot *2	Document processor boot
DP SSW*2	Document processor SSW firmware
PF1	Paper feeder 1 firmware
PF1 Boot	Paper feeder 2 boot

Items	Contents
Side PF	Side paper feeder firmware
Side PF Boot	Side paper feeder firmware boot
SMT SSW	SMT SSW firmware
DF *3	Document finisher firmware
DF Boot *3	Document finisher boot
DF Sub*4	Document finisher firmware
DF Sub Boot *4	Document finisher boot
PH*5	Punch unit firmware
PH Boot*5	Punch unit boot
MT*6	Mail tray firmware
MT Boot*6	Mail tray boot
BF*7	Booklet folder firmware
BF Boot*7	Booklet folder boot
Inserter	Inserter unit firmware
Inserter Boot	Inserter unit boot
Z-Fold	Z-fold unit firmware
Z-Fold Boot	Z-fold unit boot
Motor CPU	Motor CPU firmware
Motor CPU Boot	Motor CPU boot
Fax APL1 *1	Fax APL1 firmware
Fax Boot1 *1	Fax1 boot
Fax IPL1 *1	Fax IPL1 firmware
Fax APL2 *1	Fax APL2 firmware
Fax Boot2 *1	Fax2 boot
Fax IPL2 *1	Fax2 IPL firmware
App Name 01	Application 1 firmware
App Name 02	Application 2 firmware
App Name 03	Application 3 firmware
App Name 04	Application 4 firmware
App Name 05	Application 5 firmware
App Name 06	Application 6 firmware
App Name 07	Application 7 firmware
App Name 08	Application 8 firmware
App Name 09	Application 9 firmware
App Name 10	Application 10 firmware
App Name 11	Application 11 firmware
App Name 12	Application 12 firmware

Items	Contents
App Name 13	Application 13 firmware
App Name 14	Application 14 firmware
App Name 15	Application 15 firmware
App Name 16	Application 16 firmware

*1: Only if fax is installed/*2: Only if DP is installed (DP SSW is only for Multi feeding detection model)/*3: Only if DF is installed

*4: Only if DF (100 sheets staple) is install/*5: Only if PH is install/*6 Only if MT is installed/*7: Only if BF is installed

Completion

1 Press [Stop] key.

Return to the screen for selecting maintenance number.

U021 Initializes Memory

(Message: Init Memory)

Contents

Initialize all settings, except not adjustable setting such as each counter, service call error history and mode setting. Also, initialize the backup RAM according to the settings selected in the maintenance mode U252 (Setting the destination).

Purpose

Initialize the backup data except not adjustable settings in the field.

Method

1 Press [Start] key.

2 Select [Execute].

Items	Contents
Execute	Initialize data according to the destination information

1 Press [Start] key.

NOTE

All data other than for adjustments is initialized by the destination setting.

2 Turn the power switch off then on. Wait more than 5 seconds between the power off and on.

NOTE

An error code is displayed in case of the initialization error.
When errors occur, turn the power switch off then on, and execute initialization using maintenance mode U021.

Error codes

Items	Contents
0002	Initialize failure of setting information
0003	Initialize failure of address book information
0004	Initialize failure of Job accounting information
0005	Initialize failure of Event log/Fax communication log/Job log information
0006	Initialize failure of fax memory transfer/panel program information
0007	Initialize failure of shortcut key information
0008	Initialize failure of fax reserve information
0009	Initialize failure of account information
0010	Back up failure of RP code
0011	Initialize failure of counters in Event log/billing/maintenance category
0012	Initialize failure of coverage counter
0013	Initialize failure of machine life counter information
0014	Initialize failure of engine information
0015	Initialize failure of scanner information
0016	Initialize failure of log verification
0017	Initialize failure of device information
0018	Initialize failure of unit log information
0019	Initialize failure of counter information by coverage/Job/CBM alert feeding
0020	Initialize failure of send history information
0021	Intialize failure of UsePaper list

Completion

1 Press [Stop] key.

Return to the screen for selecting maintenance number.

U024 Formatting an HDD

(Message: Format HDD)

Contents

Initialize the HDD.

Purpose

Initialize the HDD when replacing the HDD in the field.

IMPORTANT

The following settings are also initialized with this HDD initialize.

System Menu (User Management, Job Accounting, Address Book, One Touch Key, Document Box, etc.), Shortcut key, Panel program.

The following installed firmwares are deleted with Full format function.

Optional language, HyPAS application (FMU, etc.), OCR dictionary software.

Method

1 Press [Start] key.

2 Select the item to execute.

Items	Contents
HDD Format	Executing the HDD format
SSD Format	Executing the SSD format

Method: HDD Format

1 Select [HDD Format].

2 Select the item to execute. Display the item to delete.

Items	Contents
Full	Full format
Data	Data format (The application software is saved)

Method: Full

1 Select the item to execute.

Items	Contents
Fax Image	Format Fax image
Execute	Execute format

Setting: Fax Image

2 Select [Fax Image].

3 Press [Start key to execute the initialization.

Setting: Execute

1 Select [Execute].

2 Press [Start] key to execute the initialization.

Method: Data

1 Select [Execute].

Items	Contents
Execute	Start operation

2 Press [Start] key to execute the initialization.

3 Turn the power switch off then on. Wait more than 5 seconds between the power off and on.

Method: SSD Format

1 Select [SSD Format].

2 Select the item to execute. Display the item to delete.

Items	Contents
Full (BOX Prio)	Full format (BOX priority)
Full (HyPAS Prio)	Full format (HyPAS priority)
Data	Data format (The application software is saved)

Setting: Full (BOX Prio)/Full (HyPAS Prio)

1 Select the item to execute.

Items	Contents
FMU	Format FMU
OCR	Format OCR
Execute	Start operation

Setting: Data

1 Select [Execute].

Items	Contents
Execute	Start operation

2 Press [Start] key to execute the initialization.

3 Turn the power switch off then on. Wait more than 5 seconds between the power off and on.

NOTE

Reinstall deleted firmware manually.

Optional language, OCR dictionary software, (OCRDATA): Install using USB drive.

Install the HyPAS application (FMU, etc.) from the Application screen.

NOTE

If there is no OCR dictionary software, a warning dialog is displayed, and the OCR function is unavailable.

Completion

1 Press [Stop] key.

Return to the screen for selecting maintenance number.

U025 Firmware update (S)

(Message: Firm Update (S))

Contents

1: Update firmware with USB device in case of selecting security level “Very High” *1

2: Update firmware with USB device in case of selecting Administrator Authentication on Firmware Update "On" *2

Supplement

*1: Start the firmware updating by executing U025 with USB device.

*2: When entering into maintenance mode, the message "Administrator Authentication is required for using Firmware Update. Do you use it ?" displays. By selecting [Yes] and updating the firmware can be done after input the user ID and password.

Method

1 Press [Start] key.

2 Select [Execute].

Items	Contents
Execute	Updates the firmware

3 Press [Start] key.

NOTE

This mode does not work without USB drive.

4 Turn the power switch off then on after completed. Wait more than 5 seconds between the power off and on.

Completion

1 Press [Stop] key.

Return to the screen for selecting maintenance number.

U026 Retrieve the backup data

(Message: Pulling Bkup Data)

Contents

Execute to retrieve backup data after replacing the main PWB or SSD.

Purpose

Restore the data that backup from the HDD/SSD to the flash memory on the main PWB.

Transfer the backup data from origin SSD to destination SSD via USB drive.

Execution

1 Press [Start] key.

2 Select the item to execute.

Items	Contents
Flash	Restore the backup data to flash memory on main PWB
SSD	Backup and restore SSD data when USB drive is installed

Method:Flash

1 Select [Restore].

Items	Contents
Restore	Restore the backup data

2 Press [Start] key.

3 Turn the power switch off then on.

Wait more than 5 seconds between the power off and on.

Method:SSD

1 Select the item to execute.

Items	Contents
Backup	Backup the SSD data
Restore	Restore the backup data

2 Press [Start] key.

3 Turn the power switch off then on after [Restore] completion.

Wait more than 5 seconds between the power off and on.

NOTE

Indicate "NG" when completing abnormally.

Saved data:
U278 Delivery date setting
U402 margin adjustment
U952 Maintenance workflow data

Completion

1 Press [Stop] key.

Return to the screen for selecting maintenance number.

U030 Motor operation check

(Message: Chk Motor)

Contents

Check the motor by turning the specified drive motor on.

Purpose

Check if the each motor operates successfully in the field.

Method

1 Press [Start] key.

2 Select the motor to operate.

3 Press [Start] key.

Each operation starts.

Items	Contents
Feed	Operate the paper feed motor
DLP(K)	Operate Drum motor (K), Developer K/Transfer belt motor, Belt cleaning motor, Feed motor
Belt Lift	Operate the belt lift motor
Belt Clean	Operate the belt cleaning motor
Drum(K)	Operate the drum motor (K)
IH Core	Operate the IH Core motor
Fuser	Operate the fuser motor
Fuser Release	Operate the fuser release motor
SB(CW)	Operate the exit reversing motor (CW)
SB(CCW)	Operate the exit reversing motor (CCW)
Bridge1(CW)	Operate the BR conveying motor 1 (CW)
Bridge1(CCW)	Operate the BR conveying motor 1 (CCW)
Bridge2(CW)	Operate the BR conveying motor 2 (CW)
Bridge2(CCW)	Operate the BR conveying motor 2 (CCW)
Container Mix	Operate the container mix motor
Toner Recovery	Operate the toner recovery motor
Exit	Operate the exit motor

NOTE

Press [Stop] key to quit operation.

Completion

1 Press [Stop] key.

Return to the screen for selecting maintenance number.

U031 Check the conveying switch

(Message: Chk Switch)

Contents

Display the on/off status of each switches and sensors that detect paper on the conveying path.

Purpose

Check if the conveying switches and sensors are operating correctly.

Method

1 Press [Start] key.

- Check the switches and sensors by manually turning them on/off.
- Indication of the switches turn to blue when the switches are on.

Items	Contents
Cass1 Feed	Display the switching status of the cassette 1 feed sensor
Cass2 Feed	Display the switching status of the cassette 2 feed sensor
Regist	Display the switching status of the regist sensor
Belt Jam	Display the switching status of the belt wound sensor
Exit Feed	Display the switching status of the exit sensor
DU1	Display the switching status of the duplex sensor 1
DU2	Display the switching status of the duplex sensor 2
Brg1 Feed	Display the switching status of the bridge conveying sensor 1
Brg2 Feed	Display the switching status of the bridge conveying sensor 2
Exit Paper	Display the switching status of the exit switchback sensor
Fuser Feed	Display the switching status of the fuser sensor
Inner JobSepa	Display the switching status of the JS sensor
Setting	Feed source setting
Print	Print with the setting

Setting: Setting

1 Select [Execute].

2 Select the item to set.

3 Pressing [Cassette][Duplex] key switch the screen.

Items	Contents	Setting range	Initial setting
Cass	Feed source setting	Cassette1 Cassette2 Cassette3 Cassette4 Cassette5 MP	Cassette1
Dup	Duplex print setting	Off/On	Off

Method: Print

1 Select [Execute].

2 Press [Start] key.

Start printing

Completion

1 Press [Stop] key.

Return to the screen for selecting maintenance number.

U032 Clutch operation check

(Message: Chk Clutch)

Contents

Check the status of a clutch operation related to paper feeding.

Purpose

Check if each clutch works.

Method

1 Press [Start] key.

2 Select the clutch to operate.

3 Press [Start] key.

Each operation starts.

The clutch operation is available while the motor is driving

Items	Contents
Feed	Operate the vertical conveying clutch
Middle	Operate the middle clutch
DU1	Operate DU clutch 1
DU2	Operate DU clutch 2
DLP	Operate the developer clutch
Regist	Operate the registration clutch
MPT Feed	Operate the MP clutch
Cass2	Operate the paper feed clutch 2
Cass1	Operates the paper feed clutch 1
Motor	Operate the motor

NOTE

Press [Stop] key to quit operation.

Completion

1 Press [Stop] key.

Return to the screen for selecting maintenance number.

U033 Solenoid operation check

(Message: Chk Solenoid)

Contents

Check solenoid operation related to conveyance of paper feeding and toner supply.

Purpose

Check if each solenoid works.

Method

1 Press [Start] key.

2 Select the solenoid to operate.

3 Press [Start] key.

Each operation starts.

In case of checking with motor drive, select the motor first.

It can not work with “Front cover open”.

Also It can not work during “Prepare for print”.

The clutch operation is available while the motor is driving

Items	Contents
Branch Eject Up	Operate the exit solenoid up
Branch Eject Down	Operate the exit solenoid down
ID Sensor	Operate the cleaning solenoid
Container Cover(K)	Operate the toner container solenoid (K)
Motor	Operate the motor

NOTE

Press [Stop] key to quit operation.

Completion

1 Press [Stop] key.

Return to the screen for selecting maintenance number.

U034 Paper timing data adjustment

(Message: Adj Paper Timing)

Contents

Adjust the leading edge registration or center line.

Purpose

Execute in case of a consistent error between the leading edges of the copy image and original.

Run in case of a consistent error between the center lines of the copy image and original.

Method

1 Press [Start] key.

2 Select the item to set.

Display screen for setting.

Items	Contents
Start Position	Adjust the leading edge timing
Center Line	Adjust the center line
Start Position 3/4	Adjust the leading edge registration (3/4 speed)

Adjust: Start Position

1 Select the item to adjust.

2 Press [Test Print] key.

NOTE

Pressing [Test Print] allows you to adjust setting on the screen showed below.
(Feed cassette/Conveying speed/Duplex printing/Print Set/Output tray)

3 Press [Start] key and output a test chart.

4 Press [Test Print] key.

Items	Contents	Setting range	Initial setting	Data variation
MPT(L)	Adjust the leading edge timing for the MP tray (L)	-3.0 to 3.0	0	0.1mm
MPT(S)	Adjust the leading edge timing for the MP tray (S)	-3.0 to 3.0	0	0.1mm
MPT Half(L)	Adjust the leading edge timing for the MP tray Half (L)	-3.0 to 3.0	0	0.1mm
MPT Half(S)	Adjust the leading edge timing for the MP tray Half (S)	-3.0 to 3.0	0	0.1mm
Cass(L)	Adjust the leading edge timing for the cassette paper feed (L)	-3.0 to 3.0	0	0.1mm
Cass(S)	Adjust the leading edge timing for the cassette paper feed (S)	-3.0 to 3.0	0	0.1mm
Cass Half(L)	Adjust the leading edge timing for the cassette paper feed Half (L)	-3.0 to 3.0	0	0.1mm
Cass Half(S)	Adjust the leading edge timing for the cassette paper feed Half (S)	-3.0 to 3.0	0	0.1mm
Duplex(L)	Adjust the leading edge timing for the duplex copy (L)	-3.0 to 3.0	0	0.1mm
Duplex(S)	Adjust the leading edge timing for the duplex copy (S)	-3.0 to 3.0	0	0.1mm
Dup Half(L)	Adjust the leading edge timing for the duplex copy Half (L)	-3.0 to 3.0	0	0.1mm
Dup Half(S)	Adjust the leading edge timing for the duplex copy Half (S)	-3.0 to 3.0	0	0.1mm

5 Change the setting value by using [+] [-] keys or the numeric keys.

Increase the value in case of test chart 1.

Decrease the value in case of test chart 2.

The image moves backward by increasing setting value and moves forward by decreasing the value.

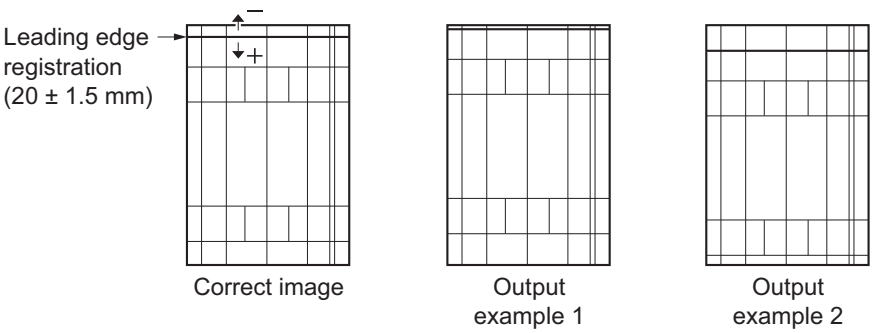

6 Press [Start] key to fix the setting.

IMPORTANT

Check the copy image after the adjustment. If the image still have a problem, attempt those maintenance modes.

U034 > U066(P.6-73) > U071(P.6-77)

Adjust: Start Position 3/4

1 Select the item to adjust.

2 Press [Test Print] key.

NOTE

Pressing [Test Print] allows you to adjust setting on the screen showed below.

(Feed cassette/Conveying speed/Duplex printing/Print Set/Output tray)

3 Press [Start] key and output test chart.

4 Press [Test Print] key.

Items	Contents	Setting range	Initial setting	Data variation
MPT(L)	Adjust the leading edge timing for the MP tray (L) at 3/4 speed	-3.0 to 3.0	0	0.1mm
MPT(S)	Adjust the leading edge timing for the MP tray (S) at 3/4 speed	-3.0 to 3.0	0	0.1mm
Cass(L)	Adjust the leading edge timing for the cassette feed (L) at 3/4 speed	-3.0 to 3.0	0	0.1mm
Cass(S)	Adjust the leading edge timing for the cassette feed (S) at 3/4 speed	-3.0 to 3.0	0	0.1mm
Duplex(L)	Adjust the leading edge timing when duplex copying (L) at 3/4 speed	-3.0 to 3.0	0	0.1mm
Duplex(S)	Adjust the leading edge timing when duplex copying (S) at 3/4 speed	-3.0 to 3.0	0	0.1mm

5 Change the setting value by using [+] [-] keys or the numeric keys.
Increase the value in case of test chart 1.
Decrease the value in case of test chart 2.

The image moves backward by increasing setting value and moves forward by decreasing the value.

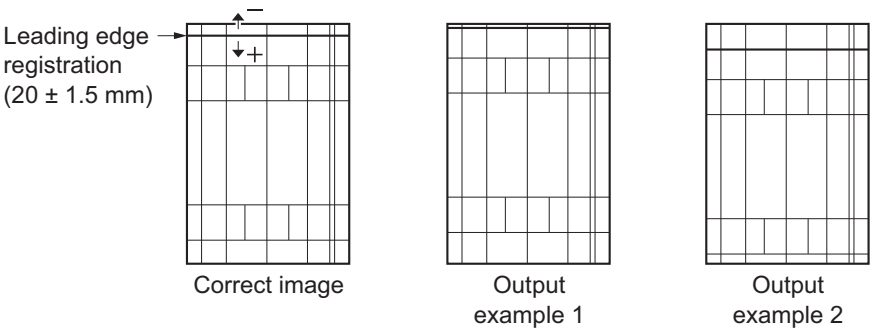

6 Press [Start] key to fix the setting.

IMPORTANT

Check the copy image after the adjustment. If the image still have a problem, attempt those maintenance modes.

U034 > U066(P.6-73) > U071(P.6-74)

Adjust: Center Line

1 Select the item to adjust.

2 Press [Test Print] key.

NOTE

Pressing [Test Print] allows you to adjust setting on the screen showed below.

(Feed cassette/Conveying speed/Duplex printing/Print Set/Output tray)

3 Press [Start] key and output test chart.

4 Press [Test Print] key.

Items	Contents	Setting range	Initial setting	Data variation
MPT	Adjust the center line for the MP tray	-3.0 to 3.0	0	0.1mm
Cass1	Adjust the center line for cassette 1 feed	-3.0 to 3.0	0	0.1mm
Cass2	Adjust the center line for cassette 2 feed	-3.0 to 3.0	0	0.1mm
Cass3	Adjust the center line for cassette 3 (Optional unit) feed	-3.0 to 3.0	0	0.1mm
Cass4	Adjust the center line for cassette 4 (Optional unit) feed	-3.0 to 3.0	0	0.1mm
Cass5	Adjust the center line for cassette 5 (Optional unit) feed	-3.0 to 3.0	0	0.1mm
Duplex	Adjusting the center line when duplex copying (Back page)	-3.0 to 3.0	0	0.1mm

5 Change the setting value by using [+] [-] keys or the numeric keys.
Increase the value in case of test chart 1.
Decrease the value in case of test chart 2.

The image moves to the right side by increasing setting value and moves to the left side by decreasing the value.

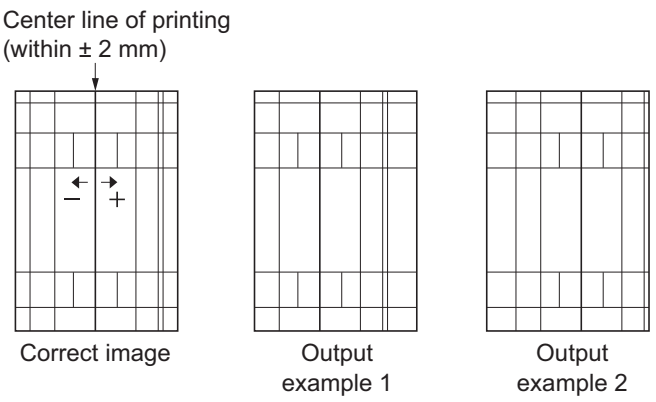

6 Press [Start] key to fix the setting.

IMPORTANT

Check the copy image after the adjustment. If the image still have a problem, attempt those maintenance modes.

U034 < U067(P.6-74) < U072(P.6-79)

Completion

1 Press [Stop] key.

Return to the screen for selecting maintenance number.

U035 Folio size setting

(Message: Adj Folio Sz)

Contents

Change the printable area in case of copying with Folio paper.

Purpose

Set the actual size of Folio and avoid from image missing on the trailing edge or right/left edges.

Method

1 Press [Start] key.

2 Select the item to set.

3 Change the setting value by using [+] [-] keys or the numeric keys.

Items	Contents	Setting range	Initial setting	Data variation
Length	Set the Folio paper length.	330 to 356 (mm)	330	1 (mm)
Width	Set the Folio paper width.	200 to 220 (mm)	210	1 (mm)

4 Press [Start] key to fix the setting.

Completion

1 Press [Stop] key.

Return to the screen for selecting maintenance number.

U037 fan operation check

(Message: Chk Fan Motor)

Contents

Drive each fan.

Purpose

Check if each fan works.

Method

1 Press [Start] key.

2 Select the fan to operate.

3 Press [Start] key.

Each operation starts.

Items	Contents
All	Operate all the fans
Exit Fuser PI	Operate fuser PI fan
Fuser Edge	Operate the fuser edge fan
IH PWB	Operate the IH PWB fan
Exit Paper IH1	Operate Exit/IH fan 1
Exit Paper IH2	Operate Exit/IH fan 2
DLP4	Operate the developer fan 4
Exit Container	Operate the exit container fan
Exit Cooling	Operate the exit cooling fan
LVU CL Fan	Operate the power supply fan
Container Cooling	Operate the container cooling fan

Press [Stop] key to quit operation.

Completion

1 Press [Stop] key.

Return to the screen for selecting maintenance number.

U051 Registration paper loop amount adjustment

(Message: Adj Paper Loop)

Contents

Adjust the paper loop level.

Purpose

Adjust loop level in case of missing image or inconsistent on the leading edge, or Z-shape fold.

Or use for check/adjust skew feed.

Method

1 Press [Start] key.

2 Select the item to adjust.

Display screen for setting.

Items	Contents
Paper Loop Amount	Paper loop amount adjustment (Full speed/Half speed)
Paper Loop Amount 3/4	Paper loop amount adjustment at 3/4 speed

Adjustment: Paper Loop Amount

1 Select the item to adjust.

2 Press [Test Print] key.

NOTE

Pressing [Test Print] allows you to adjust setting on the screen showed below.
(Feed cassette/Conveying speed/Duplex printing/Print Set/Output tray)

3 Place an original and press [Start] key to make a test copy.

4 Press [Test Print] key.

The screen for adjusting is displayed.

Items	Contents	Setting range	Data variation
MPT(L)	Paper loop amount adjustment for the MP tray feed (L)	-30 to 20	1mm
MPT H(L)	Paper loop amount adjustment for the MP tray feed (L) at half speed	-30 to 20	1mm
Cass(L)	Paper loop amount adjustment for the cassette feed (L)	-30 to 20	1mm
Cass H(L)	Paper loop amount adjustment for the cassette feed (L) at half speed	-30 to 20	1mm
Dup(L)	Paper loop amount adjustment for the duplex (L)	-30 to 20	1mm
Dup H(L)	Paper loop amount adjustment for the duplex (L) at half speed	-30 to 20	1mm
MPT(S)	Paper loop amount adjustment for the MP tray feed (S)	-30 to 20	1mm
MPT H(S)	Paper loop amount adjustment for the MP tray feed (S) at half speed	-30 to 20	1mm
Cass(S)	Paper loop amount adjustment for the cassette feed (S)	-30 to 20	1mm
Cass H(S)	Paper loop amount adjustment for the cassette feed (S) at half speed	-30 to 20	1mm
Dup(S)	Paper loop amount adjustment for the duplex (S)	-30 to 20	1mm
Dup H(S)	Paper loop amount adjustment for the duplex (S) at half speed	-30 to 20	1mm

Initial setting

Items	70ppm	60ppm	50ppm	40ppm
MPT(L)	-4	-4	-4	-4
MPT H(L)	-4	-3	-3	-3
Cass(L)	-4	-4	-4	-4
Cass H(L)	-5	-4	-4	-4
Dup(L)	-4	-4	-3	-3
Dup H(L)	-3	-2	-2	-2
MPT(S)	-4	-4	-4	-4
MPT H(S)	-4	-3	-3	-3
Cass(S)	-4	-4	-4	-4
Cass H(S)	-5	-4	-4	-4
Dup(S)	-4	-4	-3	-3
Dup H(S)	-3	-2	-2	-2

5 Change the setting value by using [+] [-] keys or the numeric keys.
Increase the value for the copy sample 1.
Decrease the value for the copy sample 2.

Increasing setting value makes high loop level and decreasing makes low loop level.

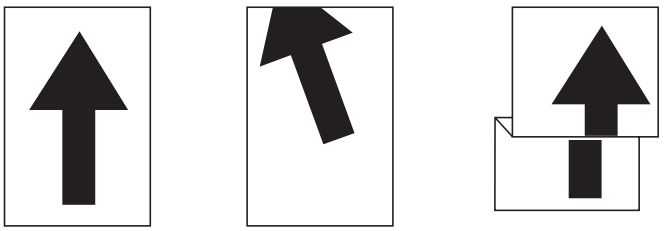

Original | Copy example 1 | Copy example 2

6 Press [Start] key to fix the setting.

Adjustment: Paper Loop Amount 3/4

1 Select the item to adjust.

2 Press [Test Print] key.

NOTE

Pressing [Test Print] allows you to adjust setting on the screen showed below.
(Feed cassette/Conveying speed/Duplex printing/Print Set/Output tray)

3 Place an original and press [Start] key to make a test copy.

4 Press [Test Print] key.

Display screen for setting.

Items	Contents	Setting range	Data variation
MPT(L)	Paper loop amount adjustment for 3/4 MP tray feed (L)	-30 to 20	1mm
Cass(L)	Paper loop amount adjustment for the 3/4 cassette feed (L)	-30 to 20	1mm
Dup(L)	Paper loop amount adjustment for the 3/4 duplex feed (L)	-30 to 20	1mm
MPT(S)	Paper loop amount adjustment for 3/4 MP tray feed (S)	-30 to 20	1mm
Cass(S)	Paper loop amount adjustment for 3/4 cassette feed (S)	-30 to 20	1mm
Dup(S)	Paper loop amount adjustment for the 3/4 duplex feed (S)	-30 to 20	1mm

Initial setting

Items	70ppm	60ppm	50ppm	40ppm
MPT(L)	-4	-4	-4	-4
Cassette(L)	-5	-5	-5	-5
Duplex(L)	-3	-3	-3	-3
MPT(S)	-4	-4	-4	-4
Cassette(S)	-5	-5	-5	-5
Duplex(S)	-3	-3	-3	-3

5 Change the setting value by using [+] [-] keys or the numeric keys.
Increase the value for the copy sample 1.
Decrease the value for the copy sample 2.

Increasing setting value makes high loop level and decreasing makes low loop level.

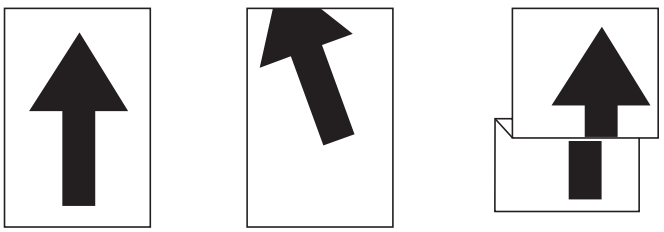

Original　Copy example 1　Copy example 2

6 Press [Start] key to fix the setting.

Completion

1 Press [Stop] key.

Return to the screen for selecting maintenance number.

U053 Adjusting the motor speed

(Message: Adj Motor Speed)

Contents

Execute the motor speed fine tuning.

Purpose

Adjustment of the printed image (magnification, improvements such as jitter) and the adjustment of the paper transport (paper wrinkle, improvements such as diagonal feeding.

NOTE

Press “+” gets motor slower and “-” gets it faster.

Execution

1 Press [Start] key.

2 Select the item to adjust.

The screen for adjusting is displayed.

Items	Contents
Motor1	Set drum motor K, drum motor CMY
Motor2	Set developer CMY, developer K/Transfer belt motor
Motor3	Set exit, fuser, BR conveying, feed, PF feed (Optional) motor
Motor1 Half	Set drum motor K, drum motor CMY in half speed mode
Motor2 Half	Set developer CMY, developer K/Transfer belt motor in half speed mode
Motor3 Half	Set exit, fuser, BR conveying, feed, PF feed (Optional) motor in half speed mode
Motor1 3/4	Set drum motor K, drum motor CMY in 3/4 speed mode
Motor2 3/4	Set developer CMY, developer K/Transfer belt motor in 3/4 speed mode
Motor3 3/4	Set exit, fuser, BR conveying, feed, PF feed (Optional) motor in 3/4 speed mode

Setting: Motor1

1 Select the item to adjust.

2 Change the setting value by using [+] [-] keys or the numeric keys.

Items	Contents	Setting range	Data variation
Drum(K)	Adjust the drum motor (K)	-5000 to 5000	-

Initial setting

Items	70ppm	60ppm	50ppm	40ppm
Drum(CMY)	0	0	0	0
Drum(K)	0	0	0	0

3 Press [Start] key to fix the setting.

Setting: Motor2

1 Select the item to adjust.

2 Change the setting value by using [+] [-] keys or the numeric keys.

Items	Contents	Setting range	Data variation
Trans Belt	Adjust the developer motor(BK)/transfer belt motor	-5000 to 5000	-

Initial setting

Items	70ppm	60ppm	50ppm	40ppm
Dev(CMY)	0	0	0	0
Trans Belt	0	0	0	0

3 Press [Start] key to fix the setting.

Setting: Motor3

1 Select the item to adjust.

2 Change the setting value by using [+] [-] keys or the numeric keys.

Items	Contents	Setting range	Data variation
SB	Adjust the exit motor	-5000 to 5000	-
Fixing	Adjust the fuser motor	-5000 to 5000	-
Bridge1	Adjust the BR conveying motor 1	-5000 to 5000	-
Bridge 2	Adjust the BR conveying motor 2	-5000 to 5000	-
Feed	Adjust the paper feed motor	-5000 to 5000	-
Option	Adjust PF the paper feed motor (Optional).	-5000 to 5000	-
Brg1 DF High	Adjust the BR conveying motor 1 (High speed)	-5000 to 5000	-
Brg1 DF Low	Adjust the BR conveying motor 2 (Low speed)	-5000 to 5000	-
Brg2 DF High	Adjust the BR conveying motor 2 (High speed)	-5000 to 5000	-
Brg2 DF Low	Adjust the BR conveying motor 2 (Low speed)	-5000 to 5000	-
Drum Mono(K)	Adjust the drum motor	-5000 to 5000	-

Initial setting

Items	70ppm	60ppm	50ppm	40ppm
SB	0	0	0	0
Fixing	0	0	0	0
Exit	0	0	0	0
Brg1	0	0	0	0
Brg2	0	0	0	0
Feed	0	0	0	0
Option	0	0	0	0
Brg1 DF H	0	0	0	0
Brg1 DF L	0	0	0	0
Brg2 DF H	0	0	0	0
Brg2 DF L	0	0	0	0
Drum Mono(K)	0	0	0	0

3 Press [Start] key to fix the setting.

Setting: Motor1 Half

1 Select the item to adjust.

2 Change the setting value by using [+] [-] keys or the numeric keys.

Items	Contents	Setting range	Data variation
Drum(K)	Adjust the drum motor (K)	-5000 to 5000	-

Initial setting

Items	70ppm	60ppm	50ppm	40ppm
Drum(CMY)	0	0	0	0
Drum(K)	0	0	0	0

3 Press [Start] key to fix the setting.

Setting: Motor2 Half

1 Select the item to adjust.

2 Change the setting value by using [+] [-] keys or the numeric keys.

Items	Contents	Setting range	Data variation
Trans Belt	Adjust the developer motor(K)/transfer belt motor in half speed mode	-5000 to 5000	-

Initial setting

Items	70ppm	60ppm	50ppm	40ppm
Dev(CMY)	0	0	0	0
Trans Belt	0	0	0	0

3 Press [Start] key to fix the setting.

Setting: Motor3 Half

1 Select the item to adjust.

The screen for adjusting is displayed.

2 Change the setting value by using [+] [-] keys or the numeric keys.

Items	Contents	Setting range	Data variation
SB	Adjust the exit motor in half speed mode	-5000 to 5000	-
Fixing	Adjust the fuser motor in half speed mode	-5000 to 5000	-
Brg1	Adjust the BR conveying motor 1 in half speed mode	-5000 to 5000	-
Brg2	Adjust the BR conveying motor 2 in half speed mode	-5000 to 5000	-
Feed	Adjust the paper feed motor in half speed mode	-5000 to 5000	-
Option	Adjust PF the paper feed motor (Optional) in half speed mode	-5000 to 5000	-

Initial setting

Items	70ppm	60ppm	50ppm	40ppm
SB	0	0	0	0
Fixing	0	0	0	0
Exit	0	0	0	0
Brg1	0	0	0	0
Brg2	0	0	0	0
Feed	0	0	0	0
Option	0	0	0	0

3 Press [Start] key to fix the setting.

Setting: Motor1 3/4

1 Select the item to adjust.

The screen for adjusting is displayed.

2 Change the setting value by using [+] [-] keys or the numeric keys.

Items	Contents	Setting range	Data variation
Drum(K)	Adjust the drum motor (K) in 3/4 speed mode	-5000 to 5000	-

Initial setting

Items	70ppm	60ppm	50ppm	40ppm
Drum(K)	0	0	0	0

3 Press [Start] key to fix the setting.

Setting: Motor2 3/4

1 Select the item to adjust.

The screen for adjusting is displayed.

2 Change the setting value by using [+] [-] keys or the numeric keys.

Items	Contents	Setting range	Data variation
Trans Belt	Adjust the developer motor(K)/transfer belt motor in 3/4 speed mode	-5000 to 5000	-

Initial setting

Items	70ppm	60ppm	50ppm	40ppm
Trans Belt	0	0	0	0

3 Press [Start] key to fix the setting.

Setting: Motor3 3/4

1 Select the item to adjust.

The screen for adjusting is displayed.

2 Change the setting value by using [+] [-] keys or the numeric keys.

Items	Contents	Setting range	Data variation
SB	Adjust the exit motor in 3/4 speed mode	-5000 to 5000	-
Fixing	Adjust the fuser motor in 3/4 speed mode	-5000 to 5000	-
Brg1	Adjust the BR conveying motor 1 in 3/4 speed mode	-5000 to 5000	-
Brg2	Adjust the BR conveying motor 2 in 3/4 speed mode	-5000 to 5000	-
Feed	Adjust the paper feed motor in 3/4 speed mode	-5000 to 5000	-
Option	Adjust the motors for the optional device in 3/4 speed mode	-5000 to 5000	-

Initial setting

Items	70ppm	60ppm	50ppm	40ppm
SB	0	0	0	0
Fixing	0	0	0	0
Exit	0	0	0	0
Brg1	0	0	0	0
Brg2	0	0	0	0
Feed	0	0	0	0
Option	0	0	0	0

3 Press [Start] key to fix the setting.

NOTE

Test copy of the original is available by pressing the [Test Print] key as interruption copy mode when executing this maintenance mode.

Pressing [Test Print] allows you to adjust setting on the screen showed below.

(Feed cassette/Conveying speed/Duplex printing/Print Set/Output tray)

Completion

1 Press [Stop] key.

Return to the screen for selecting maintenance number.

U059 Fan mode setting

(Message: Set Fan Mode)

Contents

Set the drive mode of the conveying fan motor during conveying paper.

Purpose

A Fan is added in the conveying unit in order to keep the leading edge of paper along the conveying path when passing paper to prevent waving paper from creasing.

Setting

2 Press [Start] key.

Select the item to set.

Items	Contents
Cooling	Set the Cooling Mode
Pre Over Heat	When setting is ON, if the machine inside temperature exceeds a certain level, printing speed changes to the half speed.

Setting: Cooling Cycle

3 Change the setting value by using [+] [-] keys or the numeric keys.

Items	Contents	Setting range	Data variation
Cooling	Set the Cooling Mode	-3 to 3	°C

Initial setting

Items	70ppm	60ppm	50ppm	40ppm
Cooling	2	2	2	2

4 Press [Start] key to fix the setting.

Setting: Pre Over Heat

5 Change the setting value by using [+] [-] keys or the numeric keys.

Items	Contents
On	Printing speed changes to the half speed
Off	No change (Default)

Completion

1 Press [Stop] key.

Return to the screen for selecting maintenance number.

U061 Lamp lighting check

(Message: Chk Lamp ON)

Contents

Turn on the exposure lamp.

Purpose

Turn on the exposure lamp for checking.

Method

1 Press [Start] key.

2 Select the item to operate.

Items	Contents
CCD	Turns the exposure lamp on
CIS	Turn the CIS lamp on (when the dual scanning is available)

3 Press [Start] key. Lamps are lit.

Press [Stop] key to turn the lamp off.

Completion

1 Press [Stop] key.

Return to the screen for selecting maintenance number.

U065 Adjusting the magnification for table scanning

(Message: Adj Scn)

Contents

Adjust the equal magnification in the main and sub scanning direction of the table scanning in case of incorrect.

Purpose

Adjust the equal magnification in the main and sub scanning direction of the table scanning in case of incorrect.

IMPORTANT

The magnification adjustment in the main scanning direction could cause black streaks depending on the original document.

Follow the orders below in case of an adjustment in time of scanning.

U065(main scanning direction)(P.6-71)>U065((sub scanning direction)(P.6-71)

Method

1 Press [Start] key.

2 Press [Test Print] key.

NOTE

Pressing [Test Print] allows you to adjust setting on the screen showed below.

(Feed cassette/Conveying speed/Duplex printing/Print Set/Output tray)

3 Place an original and press [Start] key to make a test copy.

4 Press [Test Print] key.

5 Select the item to adjust.

Items	Contents	Setting range	Initial setting	Data variation
Main Scan	Scanner magnification in the main scanning direction	-15 to 15	0	0.1%
Sub Scan	Adjusts scanner magnification in the sub-scanning direction	-25 to 25	0	0.1%

Adjustment: Main Scan

1 Change the setting value by using [+] [-] keys or the numeric keys.
Increase the value for the copy sample 1.
Decrease the value for the copy sample 2.

Increasing the setting value makes the image wider, and decreasing makes it narrow.



Original　Copy example 1　Copy example 2

2 Press [Start] key to fix the setting.

Adjustment: Sub Scan

1 Change the setting value by using [+] [-] keys or the numeric keys.
Increase the value for the copy sample 1.
Decrease the value for the copy sample 2.

Increasing the setting value makes the image long, and decreasing makes it short.

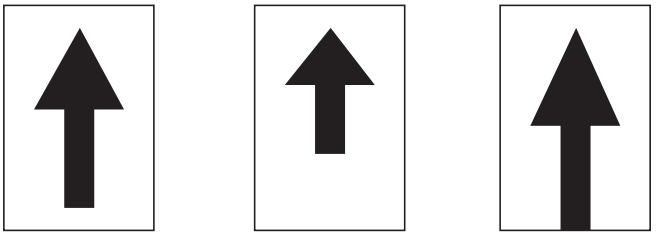

Original | Copy example 1 | Copy example 2

2 Press [Start] key to fix the setting.

Completion

1 Press [Stop] key.

Return to the screen for selecting maintenance number.

U066 Adjusting the table scanning timing

(Message: Table Timing)

Contents

Adjust the leading edge timing for the table scanning.

Purpose

Execute in case of a consistent error between the leading edges of the copy image and original.

Adjustment

1 Press [Start] key.

2 Press [Test Print] key.

NOTE

Pressing [Test Print] allows you to adjust setting on the screen showed below.

(Feed cassette/Conveying speed/Duplex printing/Print Set/Output tray)

3 Place an original and press [Start] key to make a test copy.

4 Press [Test Print] key.

Items	Contents	Setting range	Initial setting	Data variation
Front	Adjust the leading edge timing of CIS scanning	-30 to 30	0	0.16 mm

5 Change the setting value by using [+] [-] keys or the numeric keys.
Increase the value for the copy sample 1.
Decrease the value for the copy sample 2.

The image moves backward by increasing setting value and moves forward by decreasing the value.

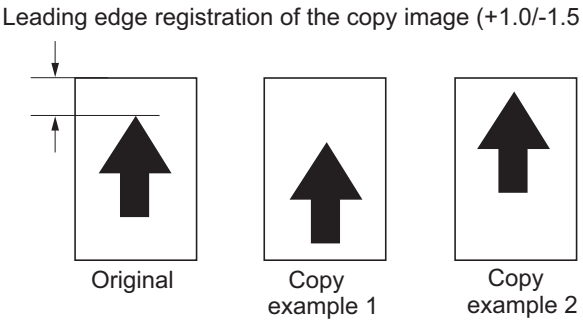

6 Press [Start] key to fix the setting.

IMPORTANT

Check the copy image after the adjustment. If the image still have a problem, attempt those maintenance modes.

U034(P.6-51) > U065(P.6-71) > U066

Completion

1 Press [Stop] key.

Return to the screen for selecting maintenance number.

U067 Adjusting the table scanning center line

(Message: Table Center)

Contents

Adjust the center line for the table scanning.

Purpose

Run this mode in case of a consistent error between the center lines of the copy image and original.

Adjustment

1 Press [Start] key.

2 Press [Test Print] key.

NOTE

Pressing [Test Print] allows you to adjust setting on the screen showed below.

(Feed cassette/Conveying speed/Duplex printing/Print Set/Output tray)

3 Place an original and press [Start] key to make a test copy.

4 Press [Test Print] key.

Items	Contents	Setting range	Initial setting	Data variation
Front	Adjust the center line	-60 to 60	0	0.085 mm

5 Change the setting value by using [+] [-] keys or the numeric keys. Decrease the value for the copy sample 1. Increase the value for the copy sample 2.

The image moves to the left side by increasing setting value and moves to the right side by decreasing the value.

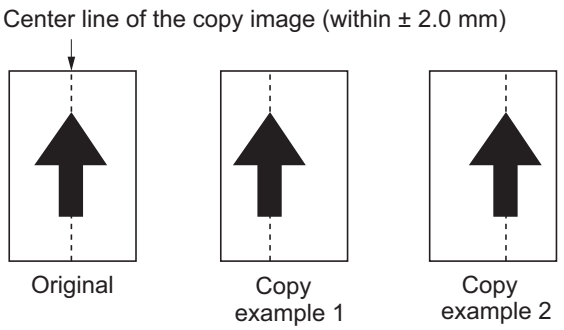

6 Press [Start] key to fix the setting.

IMPORTANT

Check the copy image after the adjustment. If the image still have a problem, attempt those maintenance modes.

U034(P.6-51) > U065(P.6-71) > U067

Completion

1 Press [Stop] key.

Return to the screen for selecting maintenance number.

U068 DP scanning position adjustment

(Message: DP Scn Start Pos)

Contents

Adjusts the starting position for scanning originals from the DP.

Execute test copy at the four scanning positions after adjustment.

Purpose

Adjust if the image fogging occurs because the scanning position is not proper when the DP is used

Execute U071 to adjust the timing of the DP leading edge when the scanning position is changed.

Method

1 Press [Start] key.

2 Select the item to adjust.

Items	Contents	Setting range	Initial setting	Data variation
DP Read	Adjusts the starting position for scanning originals	-38 to 38	0	0.16 mm
Black Line	Adjusts the scanning position for the test copy originals	0 to 3	0	-

Adjustment: DP Read

1 Select [DP Read].

2 Change the setting value by using [+] [-] keys or the numeric keys.

3 The image moves backward by increasing setting value and moves forward by decreasing the value.

4 Press [Start] key to fix the setting.

Adjustment: Black Line

1 Select [Black Line].

2 Change the setting value by using [+] [-] keys or the numeric keys.

3 Press [Start] key to fix the setting.

4 Set the original (the one of which density is known) in the DP and press the [Test Print] key.

NOTE

Pressing [Test Print] allows you to adjust setting on the screen showed below.

(Feed cassette/Conveying speed/Duplex printing/Print Set/Output tray)

5 Press [Start] key to execute the test copy.

6 Run the test copy at each scanning position which are 0 to 3 and check if no black line appears and the image is normally scanned.

Completion

1 Press [Stop] key.

Return to the screen for selecting maintenance number.

U070 DP magnification adjustment

(Message: Adj DP Motor)

Contents

Adjust the equal-magnification for DP.

Purpose

Adjust if the equal magnification is incorrect in the main and sub scanning direction with DP.

Adjustment

1 Press [Start] key.

2 Press [Test Print] key.

NOTE

Pressing [Test Print] allows you to adjust setting on the screen showed below.
(Feed cassette/Conveying speed/Duplex printing/Print Set/Output tray)

3 Place an original on the DP and press [Start] key to make a test copy.

4 Set [Duplex] in case of checking duplex scanning in test copying.

5 Press [Test Print] key.

6 Select the item to adjust.

Items	Contents	Setting range	Initial setting	Data variation
Sub Scan (F)	Adjust the equal magnification in simplex scanning	-25 to 25	0	0.1%
Sub Scan (B) *1	Adjust the 2nd side magnification in the sub scanning direction when duplex scanning	-25 to 25	0	0.1%
Sub Scan (CIS) *2	Adjust the 2nd side magnification in the sub scanning direction when duplex scanning (DP CIS)	-25 to 25	0	0.1%

*1: Only 7150 *2 Only DP-7160/7170

7 Change the setting value by using [+] [-] keys or the numeric keys.
Increase the value for the copy sample 1.
Decrease the value for the copy sample 2.

Increasing the setting value makes the image long, and decreasing makes it short.

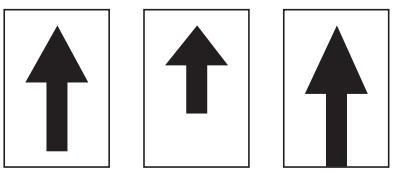

8 Press [Start] key to fix the setting.

Completion

1 Press [Stop] key.

Return to the screen for selecting maintenance number.

U071 Adjusting the DP leading edge Timing

(Message: DP Timing)

Contents

Adjust the DP original scanning timing.

Purpose

Adjust if observed consistent error between the leading or trailing edges of the original and the copy image from DP scan.

Method

1 Press [Start] key.

2 Press [Test Print] key.

NOTE

Pressing [Test Print] allows you to adjust setting on the screen showed below.

(Feed cassette/Conveying speed/Duplex printing/Print Set/Output tray)

3 Place an original on the DP and press [Start] key to make a test copy.

4 Set [Duplex] in case of checking duplex scanning in test copying.

5 Press [Test Print] key.

6 Select the item to adjust.

DP-7150

Items	Contents	Setting range	Initial setting	Data variation
Front Head	Leading edge registration. (Front page)	-32 to 32	0	0.21 mm
Front Tail	Trailing edge registration. (Front page)	-32 to 32	0	0.21 mm
Back Head	Leading edge registration. (Back page)	-32 to 32	0	0.21 mm
Back Tail	Trailing edge registration. (Back page)	-32 to 32	0	0.21 mm

DP-7160/7170

Items	Contents	Setting range	Initial setting	Data variation
Front Head	Leading edge registration. (Front page)	-27 to 27	0	0.30 mm
Front Tail	Trailing edge registration. (Front page)	-27 to 27	0	0.30 mm
CIS Head	Adjust the leading edge timing for the DP CIS scanning	-27 to 27	0	0.30 mm
CIS Tail	Adjust the trailing edge timing for the DP CIS	-27 to 27	0	0.30 mm

Adjustment: Front Head/Back Head/CIS

1 Change the setting value by using [+] [-] keys or the numeric keys.
Increase the value for the copy sample 1.
Decrease the value for the copy sample 2.

The image moves backward by increasing setting value and moves forward by decreasing the value.

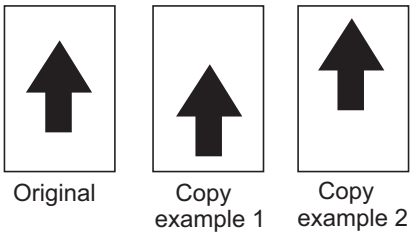

2 Press [Start] key to fix the setting.

IMPORTANT

Check the 2nd side after adjusting the 1st side. Adjust if necessary.

Check the copy image after the adjustment. If the image is still incorrect, adjust the following in the maintenance mode.

U034(P.6-51) > U071

Adjustment: Front Tail/Back Tail/CIS Tail

1 Change the setting value by using [+] [-] keys or the numeric keys.
Increase the value for the copy sample 1.
Decrease the value for the copy sample 2.

Increasing the setting value makes the image long, and decreasing makes it short.

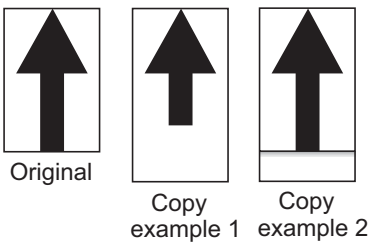

2 Press [Start] key to fix the setting.

IMPORTANT

In case if U075: Adjust DP slant is ON, there might be the possibility that the leading edge timing adjustment cannot be done correctly. In this case, turn the U075: Adjust DP slant OFF and adjust the leading edge timing.

Completion

1 Press [Stop] key.

Return to the screen for selecting maintenance number.

U072 Adjusting the DP original center

(Message: DP Center)

Contents

Adjust the DP original center line.

Purpose

Adjust if observed consistent error between the leading or trailing edges of the original and the copy image from DP scan.

Adjustment

1 Press [Start] key.

2 Press [Test Print] key.

NOTE

Pressing [Test Print] allows you to adjust setting on the screen showed below.
(Feed cassette/Conveying speed/Duplex printing/Print Set/Output tray)

3 Place an original on the DP and press [Start] key to make a test copy.

4 Set [Duplex] in case of checking duplex scanning in test copying.

5 Press [Test Print] key.

6 Select the item to adjust.

DP-7150

Items	Contents	Setting range	Initial setting	Data variation
Front	Adjust the center line (DP front side)	-60 to 60	0	0.085 mm
Back	Adjust the center line (DP back side)	-60 to 60	0	0.085 mm

DP-7160/DP-7170

Items	Contents	Setting range	Initial setting	Data variation
Front	Adjust the center line (DP front side)	-60 to 60	0	0.085 mm
CIS	Adjust the center line (DP CIS)	-39 to 39	0	0.085 mm

7 Change the setting value by using [+] [-] keys or the numeric keys.
Decrease the value for the copy sample 1.
Increase the value for the copy sample 2.

The image moves to the left side by increasing setting value and moves to the right side by decreasing the value.

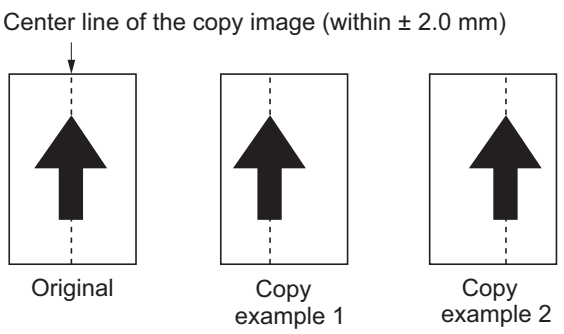

8 Press [Start] key to fix the setting.

IMPORTANT

Check the 2nd side after adjusting the 1st side. Adjust if necessary.

Check the copy image after the adjustment. If the image is still incorrect, adjust the following in the maintenance mode.

U034(P.6-51) > U065(P.6-71) > U067(P.6-74) > U072

Completion

1 Press [Stop] key.

Return to the screen for selecting maintenance number.

U073 Scanner motor operation check

(Message: Chk Scan Motor)

Contents

Check the optical system operation by operating the scanner at any magnification, scan length, and lamp On/Off condition.

Purpose

Check the scan operation.

Method

1 Press [Start] key.

2 Select the item to execute.

Items	Contents
Scanner Motor	Execute the scan operation
Home Position	Home positioning operation
Dust Check	Check if there is dust by turning the exposure lamp on
DP Reading	Scan position operation for the document processor

3 Select [Execute].

4 Press [Start] key.

5 Scanning starts with the condition specified.

6 Press [Stop] key to quit operation.

Setting: Scanner Motor

1 Select the item to set.

2 Change the setting value by using [+] [-] keys or the numeric keys.

Items	Contents	Setting range	Initial setting	Data variation
Zoom	Magnification	25 to 400 (%)	-	1%
Size	Original size	3400 to 10200	-	100
Lamp	Turning the exposure lamp On/Off	0: OFF 1: ON	-	-
Execute	Table scanning operation	-	-	-

Paper size for each setting values

setting	Paper size
4300	B5
5000	A4
5000	A5R
5100	11"×8 1/2"
5100	5 1/2"×8 1/2"
6100	B5R
6600	8 1/2"×11"

setting	Paper size
7100	A4R
7800	Folio
8400	8 1/2"×14"
8600	B4
9000	11"×15"
10000	A3
10200	11"×17"

3 Press [Start] key to fix the setting.

Completion

1 Press [Stop] key.

Return to the screen for selecting maintenance number.

U074 Adjust DP Input

(Message: Adj DP Input)

Description

Set the reading density correction coefficient for DP read only.

Purpose

It is used when setting a difference in reading density between DP and table.

Setting

1 Press [Start] key.

2 Select the item to set.

3 Change the setting value by using [+] [-] keys or the numeric keys.

Items	Contents	Setting range	Initial setting
Coefficient	Density correction for DP image scanning	0: No correction 1: Low-level correction 2: Middle-level correction 3: High-level correction	0
DP Color Regist	Set permission for the DP color registration correction operation	1: On 2: Off	1

4 Press [Start] key to fix the setting.

Completion

1 Press [Stop] key.

Return to the screen for selecting maintenance number.

U075 Adjust DP Slant

(Message: Adj DP Slant)

Description

Set the reading density correction coefficient for DP read only

Purpose

It is used when setting a difference in reading density between DP and table.

Setting

1 Press [Start] key.

2 Select the item to set.

Items	Contents
Edge Detect Lv	Transition to edge detection level setting display
On/Off Config	Transition to slant correction setting display

Setting: Edge Detect Lv

1 Select the item to set.

2 Change the setting value by using [+] [-] keys or the numeric keys.

Items	Contents	Setting range	Initial setting	Data variation
CCD	Edge detection level (image sensor)	0 to 255	218	1
CIS	Edge detection level (CIS)	0 to 255	218	1

Setting: On/Off config

1 Select the item to set.

Items	Contents
On	Slant correction function is valid
Off	Slant correction function is invalid

Initial setting: On

2 Press [Start] key to fix the setting.

Completion

1 Press [Stop] key.

Return to the screen for selecting maintenance number.

U087 Setting the DP scanning position change operation

(Message: Set DP Pos Act)

Contents

At the end of DP scan, compare the scan data between ones at the trailing edge of paper and ones after passing paper, and if the dust is distinguished, the DP scanning position of the next one is changed.

Also, reduce the black lines by image correction.

Purpose

If the dust is distinguished, the DP scanning position of the next one is changed.

Setting

1 Press [Start] key.

2 Select the item to set.

3 Change the setting value by using [+] [-] keys or the numeric keys.

Items	Contents	Setting range	Initial setting
Front	Set the scanning data threshold on the face	0 to 128	48
Back	Set the scanning data threshold on the back in duplex mode	0 to 128	48
Black Line	Initialize the original scanning position	-	-

NOTE

Decreasing the value makes dust detection frequently since dark image is detected as dust also.
If the set value is increased, dust detection becomes less likely.

Method: Black Line

1 Select [Clear].

2 Press [Start] key.

Position of scan original back to the initial line.

Completion

1 Press [Stop] key.

Return to the screen for selecting maintenance number.

U089 MIP-PG chart output

(Message: Output MIP-PG)

Contents

Select and output the MIP-PG chart generated by the main unit.

Purpose

Run this mode is to check main frame conditions except scanning section in time of adjusting scan setting, by using the MIP-PG chart that is output without scan process.

NOTE

Output in Maintenance mode such as test chart never affect print coverage and counter on Service status page.

Method

1 Select the MIP-PG chart to output

2 [Test Print] key

3 Select number of copies [Copies].

4 Press [Start] key.

Items	Contents
White	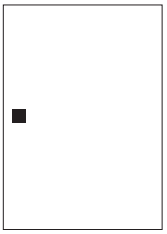
Mono Belt	PG for vertical streaks check 
Sample Set	Output the following charts for the long life unit warranty application PG for the developer status and engine ID check (four color PG) For drum quality check (Yellow PG) For drum quality check (Cyan PG) For drum quality check (Magenta PG) For drum quality check (Gray PG)

Completion

1 Press [Stop] key.

Return to the screen for selecting maintenance number.

U091 void lines correction setting

(Message: White L Cor)

Contents

Set threshold for error detection threshold in void lines correction and display the abnormal pixel count result.

Purpose

Execute in case of replacing the CIS, DP main PWB or CIS roller.

Setting

1 Press [Start] key.

2 Select the item to set.

3 Change the setting value by using [+] [-] keys or the numeric keys.

Items	Contents	Setting range	Initial setting	Data variation
Coeff(R)	Display the red pixel error counts	0 to 8191	-	-
Coeff(G)	Display the green pixel error counts	0 to 8191	-	-
Coeff(B)	Display the Blue pixel error counts	0 to 8191	-	-
Threshold(R)	Set the red error detection threshold	0 to 1023	112	-
Threshold(G)	Set the green error detection threshold	0 to 1023	112	-
Threshold(B)	Set the blue error detection threshold	0 to 1023	112	-
Threshol(Ab)	Set the abnormal pixel threshold	0 to 8191	75	-
Mode	Set the void lines correction mode	0: No correction 1: Correction 2: Test mode	0	-
Execute	Execute retaining the white reference data	-	-	-

NOTE

Do not change the initial threshold 112 basically.
Increase the value when void lines appear even if the CIS roller/glass is not dirty.
Decrease the value when thin lines disappear in any types of original.
Set it in between 50 and 200. (Out of range may affect an image output)

4 Press [Start] key to fix the setting.

Method: Execute

1 Select [Execute].

2 Press [Start] key.

3 Start retaining the white reference data.

4 Press [Test Print] key.

5 Set the gray original face-down on the document processor and set paper in the cassette.

6 Match the original and paper size.

7 Press [Start] key.

8 Output 2-sheet test chart.
1st sheet: black band of about 60mm width2nd sheet: blank (or may be gray band of about 60mm width)

9 Setting is correctly complete if no vertical line is observed on both sheets.
If a vertical black line appears on blank paper or a gray band or vertical void line appear on the black band, execute the void line correction again after cleaning the CIS roller or CIS glass.
Void line correction is complete if both sheets have vertical black lines or vertical void lines. However, check the engine since there are factors of vertical streaks at the engine Side.

10 Press [Test Print] key.

Mode is set to [1].

How to check the test copy

Blank paper	Black band	Factor	Corrective action
No lines	No lines	-	Completion
Black line	Void lines	DP CIS roller/ Glass contamination	Execute the U091 CIS roller/glass contamination
Black line	No lines	Engine PWB	Check engine PWB after completing U091
No lines	Void lines	Engine PWB	Check engine PWB after completing U091

Completion

1 Press [Stop] key.

Return to the screen for selecting maintenance number.

U099 Original size detection setting

(Message: Detect Org Sz)

Description

Check the original size detection and set the detection threshold

Purpose

Change the threshold when the original size is often missed because of entirely dark originals (high density) or originals that has dark edges.

Change the threshold

Setting

1 Press [Start] key.

2 Select the item to set.

The screen for setting is displayed.

Items	Contents
Data1	Display of the copy original width
B/W Level1	Threshold setting of original size detection.
Data2	Display the original width of Original Area color (The document processor is installed)

Execution: Data1

3 Place an original on the table and close the document processor.

4 The light source turn on and the Image sensor detects the original width. The original size sensor detects the original lengthwise. (Detect twice if the document processor is installed)

Items	Contents	Setting range	Initial setting	Data variation
Original Area(mm)	Detected the original width	0 to 300	-	1mm
Size SW L	Display ON/OFF of the original length sensor (0: Off/1: On)	0,1	-	1

Setting: B/W Level1

1 Select the item to set.

2 Change the setting value by using [+] [-] keys or the numeric keys.

Items	Contents	Setting range	Initial setting	Data variation
Original1	Set the threshold for original judgment	0 to 255	50 *1 40 *2	1
Original2	Set the threshold for original judgment	0 to 255	50 *1 30 *2	1
Original3	Set the threshold for original judgment	0 to 255	50 *1 20 *2	1

*1: With DP, *2: Without DF

NOTE

Decreasing the setting value makes the sensor's sensitivity high and allows to detect high density originals but the original mat may be detected as an original.

Detection error may occur in any positions of original when values are too much difference each other.

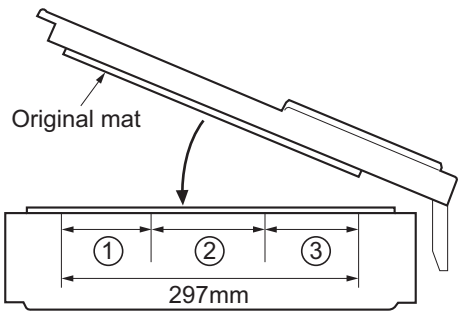

In the figure	Original R/G/B	Original width size range	
①	3	A4R to A3	8.5" to 11"
②	2	B6R to A4R	5.5" to 8.5"
③	1	to B6R	to 5.5"

3 Press [Start] key to fix the setting.

Completion

1 Press [Stop] key.

Return to the screen for selecting maintenance number.

U100 Main high voltage adjustment

(Message: Main HV Output)

Contents

Adjust the surface potential by changing the voltage impressed to the main charge roller.

Purpose

Change the set value to adjust the image when an image failure (developer leakage) occurs.

Method

1 Press [Start] key.

2 Select the item to set.

The screen for setting is displayed.

Items	Contents
Adj AC Bias	Adjust the main charge AC bias of each color
Set AC Auto Adj	Set the automatic AC bias adjustment
Set DC Bias Before	Display the main charge DC bias correction value for each color. (Adjusted value before correction)
Set DC Bias After	Display the main charge DC bias base value for each color. (Adjusted value after correction)
Adj DC Bias	Adjust the surface potential additional value
Set DC Manual	Manual adjustment for DC bias
Set Charger Freq	Set the frequency of the main charger
Chk Current	Display the electric current flows
Set AC Gain	Set the AC Gain

Setting: Adj AC Bias

1 Select the item to set.

2 Change the setting value by using [+] [-] keys or the numeric keys.

Increasing the setting value makes the image density light, and decreasing makes it dark.
Set value is variable depending on the environment.

In case that [AC Auto Adj] is on, this function works in conditions and adjust to proper value automatically.

In case that [AC Auto Adj] is off, keep the changed value unless change it manually.

Items	Contents	Setting range	Initial setting
AC(K)	Black main charge AC bias value	0 to 2300	1040

3 Press [Start] key to fix the setting.

Setting: Set AC Auto Adj

1 Select the item to set.

Items	Contents
On	Adjust automatically
Off	Not adjusted automatically

Initial setting: On

2 Press [Start] key to fix the setting.

Setting: Set DC Bias Before

1 Display the current setting.

Items	Contents
DC1(K)	Base of black main charge DC bias correction value (Full speed)

Setting: Set DC Bias After

1 Display the current setting.

Items	Contents
DC1(K)	Black main charge DC bias correction value after correction (Full speed)

Setting: Adj DC Bias

1 Select the item to set.

2 Change the setting value by using [+] [-] keys or the numeric keys.

Increasing the setting value makes the image density light, and decreasing makes it dark.

The image failure occurs due to the carrier developing if increasing the value too much.

Items	Contents	Setting range	Initial setting
DC2(K)	Black main charge DC bias additional value (Full speed)	-200 to 200	0

3 Press [Start] key to fix the setting.

Setting: Set DC Manual

1 Select the item to set.

2 Change the setting value by using [+] [-] keys or the numeric keys.

Increasing the setting value makes the image density light, and decreasing makes it dark.

The setting is effective when [AC Auto Adj] is off.

Items	Contents	Setting range
DC Bias(K)	Black main charge DC bias value	1 to 600

Initial setting

Items	70ppm	60ppm	50ppm	40ppm
DC Bias(K)	390	390	390	390

3 \Press [Start] key to fix the setting.

Setting: Set Charger Freq

1 Select the item to set.

2 Change the setting value by using [+] [-] keys or the numeric keys.

Interference fringes may occur by changing the setting.

Items	Contents	Setting range
Generally	Set the frequency of the main charger (Normal speed)	2000 to 3300
3/4	Set the frequency of the main charger (3/4 speed)	2000 to 3300
Half	Set the frequency of the main charger (Half speed)	2000 to 3300

Initial setting

Items	70ppm	60ppm	50ppm	40ppm
Generally	2850	2362	2992	2362
3/4	2992	2362	2362	2362
Half	2362	2362	2362	2362

3 Press [Start] key to fix the setting.

Setting: Chk Current

1 Display the current setting.

Items	Contents
K	Black inflow current

Do not run [Chk Current] for more than 10 seconds.

Run drum refresh after this mode since discharge product stick on drum.

Setting: Set AC Gain

1 Select the item to set.

The screen for setting is displayed.

Items	Contents
Mode	Multiplication Mode setting
Value	Multiplication value setting

Setting: Mode

1 Select the item to set.

Items	Contents
Auto	Automatic environmental setting
Mode	Charge Multiplication Mode

Initial setting: Auto

2 Press [Start] key to fix the setting.

Setting: Value

1 Select the item to set.

Items	Contents	Setting range	Initial setting
Multiple Value	Charge Multiplication value	0.8 to 1.3	1.0

2 Press [Start] key to fix the setting.

Completion

1 Press [Stop] key.

Return to the screen for selecting maintenance number.

U101 Adjust 1st Transfer Voltage Output

(Message: 1st TC Ouput

Contents

Reference/setting of high pressure control value other than main high pressure and confirm its output.

Purpose

Setting of density adjustment and for avoidance of image problems.

Method

1 Press [Start] key.

2 Select the item to set.

The screen for setting is displayed.

Items	Contents
Bias Full	Setting for middle transfer bias full
Bias Half	Setting for middle transfer bias half
Bias 3/4	Setting for middle transfer bias 3/4
Surround Correct	Setting for surrounding correction

Setting: Bias Full

3 Select the item to set.

Items	Contents
1st Side	Surface setting at full speed
2nd Side	Back side setting at full speed

Setting: 1st Side

1 Select the item to set.

Items	Contents	Setting range
C	Set Cyan value (Full)	1 to 500
M	Set Magenta value (Full)	1 to 500
Y	Set Yellow value (Full)	1 to 500
Normal1 K	Set Normal1 Black value (Full)	1 to 500
Normal2/3 K	Set Normal2/3 Black value (Full)	1 to 500
B/W	Set B/W value (Full)	1 to 500

Initial setting

Items	70ppm	60ppm	50ppm	40ppm
Bias (C)	258	240	203	160
Bias (M)	258	240	203	160
Bias (Y)	258	240	203	160
Bias (Normal1 K)	420	391	330	261
Bias (Normal2/3 K)	470	438	370	292
Bias (B/W)	420	371	330	261

2 Press [Start] key to fix the setting.

Setting: 2nd Side

1 Select the item to set.

Items	Contents	Setting range
C	Set Cyan value (Full)	1 to 500
M	Set Magenta value (Full)	1 to 500
Y	Set Yellow value (Full)	1 to 500
Normal1 K	Set Normal1 Black value (Full)	1 to 500
Normal2/3 K	Set Normal2/3 Black value (Full)	1 to 500
B/W	Set B/W value (Full)	1 to 500

Initial setting

Items	70ppm	60ppm	50ppm	40ppm
Bias (C)	258	240	203	160
Bias (M)	258	240	203	160
Bias (Y)	258	240	203	160
Bias (Normal1 K)	420	391	330	261
Bias (Normal2/3 K)	470	438	370	292
Bias (B/W)	420	371	330	261

2 Press [Start] key to fix the setting.

Setting: Bias Half

3 Select the item to set.

Items	Contents
1st Side	Surface setting at half speed
2nd Side	Back side setting at half speed

Setting: 1st Side

1 Select the item to set.

Items	Contents	Setting range
C	Set Cyan value (Half)	1 to 500
M	Set Magenta value (Half)	1 to 500
Y	Set Yellow value (Half)	1 to 500
K	Set Black value (Half)	1 to 500
B/W	Set B/W value (Half)	1 to 500

Initial setting

Items	70ppm	60ppm	50ppm	40ppm
Bias (C)	140	111	104	90
Bias (M)	140	111	104	90
Bias (Y)	140	111	104	90

Items	70ppm	60ppm	50ppm	40ppm
Bias (K)	350	278	260	200
Bias (B/W)	350	278	260	200

2 Press [Start] key to fix the setting.

Setting: 2nd Side

1 Select the item to set.

Items	Contents	Setting range
C	Set Cyan value (Half)	1 to 500
M	Set Magenta value (Half)	1 to 500
Y	Set Yellow value (Half)	1 to 500
K	Set Black value (Half)	1 to 500
B/W	Set B/W value (Half)	1 to 500

Initial setting

Items	70ppm	60ppm	50ppm	40ppm
Bias (C)	140	111	104	90
Bias (M)	140	111	104	90
Bias (Y)	140	111	104	90
Bias (K)	350	278	260	200
Bias (B/W)	350	278	260	200

2 Press [Start] key to fix the setting.

Setting: Bias 3/4

1 Select the item to set.

Items	Contents
1st Side	Surface setting at 3/4 speed
2nd Side	Back side setting at 3/4 speed

Setting: 1st Side

1 Select the item to set.

Items	Contents	Setting range
C	Set Cyan value (3/4)	1 to 500
M	Set Magenta value (3/4)	1 to 500
Y	Set Yellow value (3/4)	1 to 500
K	Set Black value (3/4)	1 to 500
B/W	Set B/W value (3/4)	1 to 500

Initial setting

Items	70ppm	60ppm	50ppm	40ppm
Bias (C)	203	160	160	111
Bias (M)	203	160	160	111
Bias (Y)	203	160	160	111
Bias (K)	380	300	300	208
Bias (B/W)	380	300	300	208

2 Press [Start] key to fix the setting.

Setting: 2nd Side

1 Select the item to set.

Items	Contents	Setting range
C	Set Cyan value (3/4)	1 to 500
M	Set Magenta value (3/4)	1 to 500
Y	Set Yellow value (3/4)	1 to 500
K	Set Black value (3/4)	1 to 500
B/W	Set B/W value (3/4)	1 to 500

Initial setting

Items	70ppm	60ppm	50ppm	40ppm
Bias (C)	203	160	160	111
Bias (M)	203	160	160	111
Bias (Y)	203	160	160	111
Bias (K)	380	300	300	208
Bias (B/W)	380	300	300	208

2 Press [Start] key to fix the setting.

Setting: Surround Correct

1 Select the item to set.

Items	Contents
On	Prohibit to correct
Off	Permit to correct

Initial setting: Off

2 Press [Start] key to fix the setting.

Completion

1 Press [Stop] key.

Return to the screen for selecting maintenance number.

U106 Secondary transfer voltage adjustment

(Message: Adj 2nd TC Output)

Contents

Set the secondary transfer control voltage.

Purpose

Change setting if a failure such as faint image, etc. occurs.

Method

1 Press [Start] key.

2 Select the item to set.

The screen for setting is displayed.

Items	Contents
Light/Normal1	Secondary transfer current value for Light and Normal 1
Normal2/3	Secondary transfer current value for Normal 2, 3
Heavy1	Secondary transfer current value for Heavy 1
Heavy2/3	Secondary transfer current value for Heavy 2, 3
Heavy4/5	Secondary transfer current value for Heavy 4, 5
Transparency	Secondary transfer current value for Transparency
Bias	Bias setting

Setting: Light/Normal1

1 Select the item to set.

The screen for setting is displayed.

Items	Contents
1st	1st side Secondary transfer current value at full speed
2nd	2nd side Secondary transfer current value at full speed
1st 3/4(Gloss)	1st side Secondary transfer current value of gloss mode at 3/4 speed
2nd 3/4(Gloss)	2nd side Secondary transfer current value of gloss mode at 3/4 speed
1st B/W	1st side B/W Secondary transfer current value at full speed
2nd B/W	2nd side B/W Secondary transfer current value at full speed

Setting: 1st/2nd/1st (3/4 Gloss)/2nd (3/4 Gloss)

1 Select the item to set.

2 Change the setting value by using [+] [-] keys or the numeric keys.

Items	Contents	Setting range	Data variation
Width=105	Set paper width=105	2 to 230	1[uA]
Width=210	Set paper width=210	2 to 230	1[uA]
Width=297	Set paper width=297	2 to 230	1[uA]

[1st]

Initial setting

項目	70ppm	60ppm	50ppm	40ppm
Width=105	153	142	120	95
Width=210	122	114	96	76
Width=297	90	84	71	56

[2nd]

Initial setting

項目	70ppm	60ppm	50ppm	40ppm
Width=105	153	142	120	95
Width=210	122	114	96	76
Width=297	80	74	63	50

[1st 3/4(Gloss)]

Initial setting

項目	70ppm	60ppm	50ppm	40ppm
Width=105	120	95	95	66
Width=210	80	63	63	44
Width=297	64	51	51	35

[2nd 3/4(Gloss)]

Initial setting

項目	70ppm	60ppm	50ppm	40ppm
Width=105	120	95	95	66
Width=210	80	63	63	44
Width=297	64	51	51	35

[1st B/W]

Initial setting

Items	70ppm	60ppm	50ppm	40ppm
Width=105	133	124	104	82
Width=210	100	93	79	62
Width=297	55	51	43	34

[2nd B/W]

Initial setting

Items	70ppm	60ppm	50ppm	40ppm
Width=105	143	133	112	89
Width=210	132	123	104	82
Width=297	122	114	96	76

3 Press [Start] key to fix the setting.

Setting: Normal2/3

1 Select the item to set.

The screen for setting is displayed.

Items	Contents
1st	1st side Secondary transfer current value at full speed
2nd	2nd side Secondary transfer current value at full speed
1st 3/4(Gloss)	1st side Secondary transfer current value of gloss mode at 3/4 speed
2nd 3/4(Gloss)	2nd side Secondary transfer current value of gloss mode at 3/4 speed
1st B/W	1st side B/W Secondary transfer current value at full speed
2nd B/W	2nd side B/W Secondary transfer current value at full speed

Setting: 1st/2nd/1st (3/4 Gloss)/2nd (3/4 Gloss)

1 Select the item to set.

2 Change the setting value by using [+] [-] keys or the numeric keys.

Items	Contents	Setting range	Data variation
Width=105	Set paper width=105	2 to 230	1[uA]
Width=210	Set paper width=210	2 to 230	1[uA]
Width=297	Set paper width=297	2 to 230	1[uA]

[1st]

Initial setting

項目	70ppm	60ppm	50ppm	40ppm
Width=105	153	415	120	95
Width=210	122	114	96	76
Width=297	90	84	71	56

[2nd]

Initial setting

項目	70ppm	60ppm	50ppm	40ppm
Width=105	143	133	112	89
Width=210	112	114	96	76
Width=297	90	84	71	56

[1st 3/4(Gloss)]

Initial setting

項目	70ppm	60ppm	50ppm	40ppm
Width=105	120	95	95	66
Width=210	80	63	63	44
Width=297	64	51	51	35

[2nd 3/4(Gloss)]

Initial setting

項目	70ppm	60ppm	50ppm	40ppm
Width=105	120	95	95	66
Width=210	80	63	63	44
Width=297	64	51	51	35

[1st B/W]

Initial setting

Items	70ppm	60ppm	50ppm	40ppm
Width=105	133	124	104	82
Width=210	100	93	79	62
Width=297	55	51	43	34

[2nd B/W]

Initial setting

Items	70ppm	60ppm	50ppm	40ppm
Width=105	143	133	112	89
Width=210	132	123	104	82
Width=297	122	114	96	76

3 Press [Start] key to fix the setting.

Setting: Heavy1

1 Select the item to set.

The screen for setting is displayed.

Items	Contents
1st 3/4	1st side Secondary transfer current value at 3/4 speed
2nd 3/4	2nd side Secondary transfer current value at 3/4 speed

Setting: 1st 3/4 / 2nd 3/4

1 Select the item to set.

2 Change the setting value by using [+] [-] keys or the numeric keys.

3 Press [Start] key to fix the setting.

Items	Contents	Setting range	Data variation
Width=105	Set paper width=105	2 to 230	1[uA]
Width=210	Set paper width=210	2 to 230	1[uA]
Width=297	Set paper width=297	2 to 230	1[uA]

1st 3/4

Initial setting

項目	70ppm	60ppm	50ppm	40ppm
Width=105	120	95	95	66
Width=210	80	63	63	44
Width=297	64	51	51	35

[2nd 3/4]

Initial setting

項目	70ppm	60ppm	50ppm	40ppm
Width=105	120	95	95	66
Width=210	91	72	72	50
Width=297	64	51	51	35

Heavy2/3

1 Select the item to set.

The screen for setting is displayed.

Items	Contents
1st Half	1st side Secondary transfer current value at half speed
2nd Half	2nd side Secondary transfer current value at half speed

Setting: 1st Half/2nd Half

1 Select the item to set.

2 Change the setting value by using [+] [-] keys or the numeric keys.

Items	Contents	Setting range	Data variation
Width=105	Set paper width=105	2 to 230	1[uA]
Width=210	Set paper width=210	2 to 230	1[uA]
Width=297	Set paper width=297	2 to 230	1[uA]

[1st Half]

Initial setting

項目	70ppm	60ppm	50ppm	40ppm
Width=105	93	74	67	53
Width=210	67	53	49	38
Width=297	50	40	37	29

[2nd Half]

Initial setting

項目	70ppm	60ppm	50ppm	40ppm
Width=105	133	106	79	76
Width=210	79	62	59	45
Width=297	60	47	44	34

3 Press [Start] key to fix the setting.

Setting: Heavy4/5

1 Select the item to set.

The screen for setting is displayed.

Items	Contents
1st Half	1st side Secondary transfer current value at half speed
2nd Half	2nd side Secondary transfer current value at half speed

Setting: 1st Half/2nd Half

1 Select the item to set.

2 Change the setting value by using [+] [-] keys or the numeric keys.

Items	Contents	Setting range	Data variation
Width=105	Set paper width=105	2 to 230	1[uA]
Width=210	Set paper width=210	2 to 230	1[uA]
Width=297	Set paper width=297	2 to 230	1[uA]

[1st Half]

Initial setting

項目	70ppm	60ppm	50ppm	40ppm
Width=105	93	74	69	53
Width=210	67	53	49	38
Width=297	50	40	37	29

[2nd Half]

Initial setting

項目	70ppm	60ppm	50ppm	40ppm
Width=105	153	106	99	76
Width=210	79	62	59	45
Width=297	60	47	44	34

3 Press [Start] key to fix the setting.

Setting: Transparency

1 Select the item to set.

2 Change the setting value by using [+] [-] keys or the numeric keys.

Items	Contents	Setting range	Data variation
Width=105	Set paper width=105	2 to 230	1[uA]
Width=210	Set paper width=210	2 to 230	1[uA]
Width=297	Set paper width=297	2 to 230	1[uA]

Initial setting

項目	70ppm	60ppm	50ppm	40ppm
Width=105	60	47	44	34
Width=210	51	41	38	29
Width=297	56	44	41	32

3 Press [Start] key to fix the setting.

Setting: Bias

1 Select the item to set.

2 Change the setting value by using [+] [-] keys or the numeric keys.

Items	Contents	Setting range	Data variation
Reverse	Reverse bias setting (Full speed)	0 to 230	-
Reverse Half	Reverse bias setting (Half speed)	0 to 230	-
Reverse 3/4	Reverse bias setting (3/4 speed)	0 to 230	-
Reverse BW	Reverse bias setting (BW speed)	0～230	1[uA]
Cleaning	Cleaning (Full speed)	2 to 230	1[uA]
Cleaning Half	Cleaning (Half speed)	2 to 230	1[uA]
Cleaning 3/4	Cleaning (3/4 speed)	2 to 230	1[uA]

Initial setting

項目	70ppm	60ppm	50ppm	40ppm
Reverse	0	0	0	0
Reverse Half	0	0	0	0
Reverse 3/4	0	0	0	0
Reverse BW	0	0	0	0
Cleaning	78	72	61	48
Cleaning Half	63	50	47	36
Cleaning 3/4	73	58	58	40

3 Press [Start] key to fix the setting.

Completion

1 Press [Stop] key.

Return to the screen for selecting maintenance number.

U107 Primary transfer cleaning voltage adjustment

(Message: Adj 1st TC Clean)

Contents

Belt(A)/(B): Set the transfer belt cleaning control voltage

1St sheet CLN B/W: Printing size gets off from cleaning position.

Purpose

Belt(A): Change the setting when offset images appear because of the transfer belt cleaning failure.

1St sheet CLN B/W: Set if transfer belt cleaning failure happen only in the first page for continuous B/W printing.

NOTE

First copy time gets slower with this function.

Method

1 Press [Start] key.

2 Select the item to set.

The screen for setting is displayed.

Items	Contents
Belt(A)	Belt A setting
Belt(B)	Belt B setting
1st Sheet CLN B/W	Monochrome post print setting

Setting: Belt(A)

1 Select the item to set.

2 Change the setting value by using [+] [-] keys or the numeric keys.

Items	Contents	Setting range	Data variation
Full	Full speed setting	0 to 60	1[uA]
Half	Half speed setting	0 to 60	1[uA]
3/4	3/4 speed setting	0 to 60	1[uA]
B/W	B/W speed setting	0 to 60	1[uA]

Initial setting

項目	70ppm	60ppm	50ppm	40ppm
Full	8	8	8	8
Half	8	8	8	8
3/4	8	8	8	8
B/W	8	8	8	8

3 Press [Start] key to fix the setting.

Setting: Belt(B)

1 Select the item to set.

2 Change the setting value by using [+] [-] keys or the numeric keys.

Items	Contents	Setting range	Data variation
Full	Full speed setting	0 to 60	1[uA]
Half	Half speed setting	0 to 60	1[uA]
3/4	3/4 speed setting	0 to 60	1[uA]
B/W	B/W speed setting	0 to 60	1[uA]

Initial setting

項目	70ppm	60ppm	50ppm	40ppm
Full	8	8	8	8
Half	8	8	8	8
3/4	8	8	8	8
B/W	8	8	8	8

3 Press [Start] key to fix the setting.

Setting: 1st Sheet CLN B/W

1 Select the item to set.

Items	Contents
On	The coin vendor is installed
Off	The coin vendor is not installed

Initial setting: On

2 Press [Start] key to fix the setting.

NOTE

Test copy is available by pressing [Test Print] key as interruption copy mode while this maintenance mode is running.

Pressing [Test Print] allows you to adjust setting on the screen showed below.

(Feed cassette/Conveying speed/Duplex printing/Color BW setting/Print Set/Output tray)

Completion

1 Press [Stop] key.

Return to the screen for selecting maintenance number.

U108 Separation Shift bias adjustment

(Message: Adj Sepa Sbias)

Description

Separation shift bias OFF timing

Purpose

Change the setting value if paper separation failure occurs.

Method

1 Press [Start] key.

2 Select the item to set.

The screen for setting is displayed.

Items	Contents
Output	Separation Shift bias output adjustment
Output 3/4	Separation Shift bias output adjustment at 3/4 speed
Output B/W	Separation Shift bias output adjustment at B/W
Timing	ON/OFF timing adjustment by paper position

Setting: Output

1 Select the item to set.

2 Change the setting value by using [+] [-] keys or the numeric keys.

Items	Contents	Setting range	Data variation
Light 1st	Separation current setting for front side of light paper at full speed	0 to 60	1[uA]
Light 2nd	Separation current setting for back side of light paper at full speed	0 to 60	1[uA]
Normal 1st	Separation current setting for front side of normal paper at full speed	0 to 60	1[uA]
Normal 2nd	Separation current setting for back side of normal paper at full speed	0 to 60	1[uA]
Add Lead	Additive setting for the leading edge of normal paper	-60 to 60	1[uA]
Heavy/OHP	Separation current setting for Heavy and Transparency	0 to 60	1[uA]

Initial setting

項目	70ppm	60ppm	50ppm	40ppm
Light 1st	20	20	17	5
Light 2nd	0	0	0	0
Normal 1st	5	5	5	5
Normal 2nd	5	5	5	5
Add Lead	2	2	2	2
Heavy/OHP	0	0	0	0

3 Press [Start] key to fix the setting.

Setting: Output 3/4

1 Select the item to set.

2 Change the setting value by using [+] [-] keys or the numeric keys.

Items	Contents	Setting range	Data variation
Light 1st	Separation current setting for front side of light paper at full speed	0 to 60	1[uA]
Light 2nd	Separation current setting for back side of light paper at full speed	0 to 60	1[uA]
Normal 1st	Separation current setting for front side of normal paper at full speed	0 to 60	1[uA]
Normal 2nd	Separation current setting for back side of normal paper at full speed	0 to 60	1[uA]

Initial setting

Output 3/4

項目	70ppm	60ppm	50ppm	40ppm
Light 1st	17	14	14	5
Light 2nd	0	0	0	0
Normal 1st	5	5	5	5
Normal 2nd	5	5	5	5

3 Press [Start] key to fix the setting.

Setting: Output B/W

1 Select the item to set.

2 Change the setting value by using [+] [-] keys or the numeric keys.

Items	Contents	Setting range	Data variation
Light 1st	Separation current setting for front side of light paper at full speed	0 to 60	1[uA]
Light 2nd	Separation current setting for back side of light paper at full speed	0 to 60	1[uA]
Normal 1st	Separation current setting for front side of normal paper at full speed	0 to 60	1[uA]
Normal 2nd	Separation current setting for back side of normal paper at full speed	0 to 60	1[uA]

Initial setting

Output B/W

項目	70ppm	60ppm	50ppm	40ppm
Light 1st	21	20	14	5
Light 2nd	0	0	0	0
Normal 1st	5	5	5	5
Normal 2nd	5	5	5	5

3 Press [Start] key to fix the setting.

Setting: Timing

1 Select the item to set.

2 Change the setting value by using [+] [-] keys or the numeric keys.

Items	Contents	Setting range	Initial setting	Data variation
On Lead	Separation shift bias ON timing at the leading edge	-200 to 200	-20	1mm
On Center	Separation shift bias ON timing at the center of page	-200 to 200	30	1mm
Off	Separation shift bias OFF timing	-200 to 200	10	1mm

3 Press [Start] key to fix the setting.

NOTE

Test copy is available by pressing [Test Print] key as interruption copy mode while this maintenance mode is running.

Pressing [Test Print] allows you to adjust setting on the screen showed below.

(Feed cassette/Conveying speed/Duplex printing/Color BW setting/Print Set/Output tray)

Completion

1 Press [Stop] key.

Return to the screen for selecting maintenance number.

U110 Drum counter

(Message: Drum Cnt)

Contents

Display the drum counter values.

Purpose

Execute to check the drum usage status.

Method

1 Press [Start] key.

The drum counter is displayed.

Items	Contents
K	Display the black drum counter

Completion

2 Press [Stop] key.

Return to the screen for selecting maintenance number.

U115 LSU driving time

(Message: LSU Time)

Contents

Display the LSU driving time.

Purpose

Use for check LSU life or change/reset

Method

1 Press [Start] key.

Display the count.

Items	Contents
Cnt	Display the LSU drive time
Clear	Reset LSU drive time

Completion

1 Press [Stop] key.

Return to the screen for selecting maintenance number.

U117 Drum unit number

(Message: Drum No.)

Contents

Display the drum number.

Purpose

Execute to check the drum number.

Method

1 Press [Start] key.

Display the drum number.

Items	Contents
K	Display the black drum number

Completion

1 Press [Stop] key.

Return to the screen for selecting maintenance number.

U118 Drum unit history

(Message: Drum History)

Contents

Display the machine serial number and drum counter history.

Purpose

Execute to check the machine serial number and drum counter values.

Method

1 Press [Start] key.

Select the item to refer to.

Items	Contents
K	Display the black drum history

Display the machine serial number and 3 items of the drum counter history.

Items	Contents
Machine History1 to 3	Machine serial number history
Cnt History1 to 3	The drum counter history

Completion

1 Press [Stop] key.

Return to the screen for selecting maintenance number.

U119 Setting the drum

(Message: Set Up Drum Unit)

Contents

Set the initial LSU laser power based on the drum sensitivity

Purpose

Execute when the drum unit or laser scanner unit is replaced.

After completing, execute maintenance mode U464 [Calibration].

Method

1 Press [Start] key.

2 Select [Execute].

Items	Contents
Execute	Send the drum sensitivity data in EEPROM to engine PWB and correct LSU laser power.

3 Press [Start] key.

Start the drum setup operation.

Completion

1 Press [Stop] key.

Return to the screen for selecting maintenance number.

U120 Drum drive distance counter

(Message: Drum Drv Dist Cnt)

Contents

Display the drum drive distance counter.

Purpose

The counter for the drum control is used in the replacement of the conventional drum drive time.

Method

1 Press [Start] key.

Display the count.

Items	Contents
K	Display the black drum drive distance counter

Completion

1 Press [Stop] key.

Return to the screen for selecting maintenance number.

U122 Display the primary transfer unit number

(Message: 1st Trans No.)

Description

Display the primary transfer unit number.

Purpose

Execute to check the primary transfer unit number.

Method

1 Press [Start] key.

Display the primary transfer unit number

Completion

1 Press [Stop] key.

Return to the screen for selecting maintenance number.

U123 Primary transfer unit history

(Message: 1st Trans History)

Description

Display the machine number and the primary transfer unit counter history

Purpose

Confirm the machine number and primary transfer unit counter

Method

1 Press [Start] key.

Display the machine serial number and 3 items of the primary transfer unit counter history.

Items	Contents
Machine History1 to 3	Machine Number history
Cnt History1 to 3	Primary transfer unit counter history

Completion

1 Press [Stop] key.

Return to the screen for selecting maintenance number.

U127 Clearing the transfer count

(Message: Clr Trans Cnt)

Contents

Display and clear the transfer counts for the transfer high-voltage output correction etc.

Purpose

Verify the primary/secondary transfer unit counts after replacing. Also, clear the counts after replacement

Method

1 Press [Start] key.

The transfer counter value appears.

Items	Contents
Mid(Cnt)	Display the primary transfer counts
2nd(Cnt)	Displaying the secondary transfer counts
Mid(Time)	Display the primary transfer unit drive time counts
2nd(Time)	Display the secondary transfer unit drive time counts
Clear	Clear the transfer count

Method: Clear

1 Select [Clear].

2 Press [Start] key and clear the counter value.

Only 2nd(Cnt)/2nd(Time) can be cleared

Completion

1 Press [Stop] key.

Return to the screen for selecting maintenance number.

U128 Transfer timing adjustment

(Message: Adj Trans Timing)

Contents

Correction of secondary transfer timing and correction of data change amount

Purpose

Prevent paper from being rolled up by the drum.

Setting

1 Press [Start] key.

2 Select the item to set.

3 Change the setting value by using [+] [-] keys or the numeric keys.

Items	Contents	Setting range	Data variation
On Timing 1st	1st side transfer On timing adjustment value	-200 to 200	0.1 ms
On Timing 2nd	2nd transfer On timing adjustment value	-200 to 200	0.1 ms
Off Timing	Transfer Off timing adjustment value	-200 to 200	0.1 ms

Initial setting

項目	70ppm	60ppm	50ppm	40ppm
On Timing 1st	-26	-20	-12	5
On Timing 2nd	-26	-20	-12	5
Off Timing	10	9	8	6

4 Press [Start] key to fix the setting.

Completion

1 Press [Stop] key.

Return to the screen for selecting maintenance number.

U131 Toner sensor control voltage adjustment

(Message: Adj Toner SCV)

Description

Confirm the toner sensor control voltage.

Purpose

Confirm the toner sensor control voltage.

Method

1 Press [Start] key.

2 Select the item to set.

The screen for setting is displayed.

Items	Contents
Auto	Toner sensor control voltage automatic adjustment

Method: Auto

1 The current setting is displayed.

Items	Contents
Default(K)	Toner sensor K default control voltage

Completion

1 Press [Stop] key.

Return to the screen for selecting maintenance number.

U132 Forcible toner supply operation

(Message: Supply Toner)

Contents

Toner is supplied forcibly until the toner sensor output value reaches the toner supply level.

Purpose

Execute if toner empty is often detected.

Method

1 Press [Start] key.

2 Select the item to set.

3 Select [Execute].

4 Press [Start] key.

Run toner supply until the toner sensor output value gets the toner supply level.

Items	Contents
Supply(K)	Black toner supply level
Sensor(K)	Black toner sensor output value
Execute	Perform toner installation

5 Press [Stop] key to quit operation.

Completion

1 Press [Stop] key.

Return to the screen for selecting maintenance number.

U133 Developer Refresh

(Message: Developer Refresh)

Contents

Perform developer refresh.

Purpose

Perform developer refresh.

Method

1 Press [Start] key.

2 Select the item to set.

3 Select [Execute].

Items	Contents
K	ON/OFF setting of the developer refresh for Black
Execute	Perform developer refresh

Completion

1 Press [Stop] key.

Return to the screen for selecting maintenance number.

U135 Checking the toner motor operation

(Message: Chk Toner Motor)

Contents

Drives the toner motor.

Purpose

Execute to check the toner motor operation.

IMPORTANT

If driven for a long time or several times repeatedly, the developer unit will be full of toner inside and it may lock up.

Method

1 Press [Start] key.

2 Select the item to operate.

3 Press [Start] key.

The operation starts.

Items	Contents
Toner	Drive the toner motor (All Color)
Hopper	Drive the toner motor
Sensor(K) *1	Toner sensor output deference (K)

*1: Display only (Update regularly)

4 Press [Stop] key to quit operation.

Completion

1 Press [Stop] key.

Return to the screen for selecting maintenance number.

U136 Toner level detection setting

(Message: Set Toner NearEnd)

Contents

Execute the level setting of printable pages between toner near end and toner empty.

Purpose

Change the timing of toner near end earlier than the current setting if user feels it is too short between near end and empty.

Setting

1 Press [Start] key.

2 Select the item to set.

Change the setting value by using [+] [-] keys or the numeric keys.

Items	Contents	Setting range	Initial setting	Data variation
K	Setting the black toner level	0 to 9	3	-

If the set value is increased, the time interval from the toner near end to the toner empty becomes longer.

If the set value is reduced, the time interval from toner near end to toner empty becomes shorter.

0: no toner near end detection

3 Press [Start] key to fix the setting.

NOTE

The setting value can not work if the change has done while “Toner Low” is already displaying.

Main switch has to be turned on and off in case of changing the value while “Toner Low” is already displaying.

Completion

1 Press [Stop] key.

Return to the screen for selecting maintenance number.

U139 Temperature, humidity

(Message: Temp/Humidity)

Contents

Display internal and external temperature, and external humidity.

Purpose

Check internal and external temperature, and external humidity.

Method

1 Press [Start] key.

2 Select the item to set.

Items	Contents
Ext/Int	Machine inside/outside temperature (°C) and machine outside humidity (%)
LSU	Machine inside temperature around LSU (°C)
Developing	Machine inside temperature around Developer (°C)

Method: Ext/Int

1 Display the current temperature and humidity

Items	Contents
External Temp	Machine outside temperature (°C)
External Humidity	Machine outside humidity (%)
Internal Temp	Machine inside temperature (°C)

Method: LSU

1 Display the current temperature and humidity

Items	Contents
Internal Temp	Machine inside temperature around Laser Scanner Unit (°C)

Method: Developing

1 Display the current temperature and humidity

Items	Contents
Internal Temp	Machine inside temperature around Developer Unit (°C)

Completion

1 Press [Stop] key.

Return to the screen for selecting maintenance number.

U140 Developer bias adjustment (Message: Adj Dev Bias)

Contents

Display the developer bias set values or Set high altitude mode.

Purpose

Execute to check/change the developer bias values.

Method

1 Press [Start] key.

2 Select the item to set.

The screen for setting is displayed.

Items	Contents
Mag DC	Set the developer magnet roller DC bias.
Mag AC	Set the developer magnet roller AC bias.
Mag Freq	Set the developer magnet roller frequency.
Mag Duty	Set the developer magnet roller duty.
AC Calib	Execute and set AC Calibration
Img Pref	Set the toner concentration
Altitude Adj	Set the altitude adjustment mode

Setting: Mag DC

1 Select the item to set.

2 Change the setting value by using [+] [-] keys or the numeric keys.

Items	Contents	Setting range	Initial setting
K	Black developer magnet roller DC bias setting	40〜260	120

3 Press [Start] key to fix the setting.

Setting: Mag AC

1 Select the item to set.

2 Change the setting value by using [+] [-] keys or the numeric keys.

Items	Contents	Setting range	Initial setting
K	Black developer magnet roller AC bias setting	500〜1200	900

3 Press [Start] key to fix the setting.

Setting: Mag Freq

1 Refer the item to check.

Items	Contents
Full	Reference of the Developer magnet roller frequency (Full speed)

Default value

70ppm	60ppm	50ppm	40ppm
10148	10629	9973	10629

Setting: Mag Duty

1 Select the item to set.

2 Change the setting value by using [+] [-] keys or the numeric keys.

Items	Contents	Setting range	Initial setting
Full	Developer magnet roller duty setting (Full speed)	1 to 99	50

3 Press [Start] key to fix the setting.

Setting: AC Calib

1 Select the item to set.

The screen for setting is displayed.

Items	Contents
Calibration	AC Calibration setting
Auto	AC auto Calibration execution setting

Setting: Calibration

1 Select the item to set.

Items	Contents
Execute	Executing Calibration

2 Select [Execute].

3 Press [Start] key. AC calibration is started.

4 Turn the power switch off then on. Wait more than 5 seconds between the power off and on.

NOTE

An error code appears when there is an error.

Setting: Auto

1 Select the item to set.

Items	Contents
On	AC calibration auto setting is on
Off	AC calibration auto setting is off

2 Press [Start] key to fix the setting.

Initial setting: On

Setting: Image Pref

1 Select the item to set.

2 Change the setting value by using [+] [-] keys or the numeric keys.

Items	Contents	Setting range	Initial setting
Copy	Set the copy image density	-1 to 1	0

3 Press [Start] key to fix the setting.

If the set value is reduced, toner consumption decreases.

4 Turn the power switch off then on. Wait more than 5 seconds between the power off and on.

Setting: Altitude Adj.

1 Select the item to set.

Items	Contents
Normal	Set 1000 m or less
1001 to 2000 m	Set at 1001 to 2000 m
2001 to 3000 m	Set at 2001 to 3000 m
3001 to 3500 m	Set at 3001 to 3500 m

Initial setting: Normal

2 Press [Start] key to fix the setting.

Completion

1 Press [Stop] key.

Return to the screen for selecting maintenance number.

U147 Setting the toner applying mode

(Message: Set Toner Apply)

Contents

Mode selection for removing overcharged toner in the developer unit (Toner applying mode). Also, Set the operation that is to take back accumulated toner on the developer blade to the developer unit (vibration motor control).

Purpose

Change the setting to reduce the toner applying amount. Execute to change the vibration motor control frequency.

IMPORTANT

Image density gets lowered if overcharged toner stays in the developer unit.

Method

1 Press [Start] key.

2 Select the item to set.

The screen for setting is displayed.

Items	Contents
Timing	Set the toner apply timing
Mode	Set the toner applying mode.
Upper limit	Set the upper coverage limit of the toner applying amount for each operation mode.

Setting: Timing

1 Change the setting value by using [+] [-] keys or the numeric keys.

Items	Contents	Setting range	Initial setting
Job End	Set the toner apply count (job end)	1 to 255	12

2 Press [Start] key to fix the setting.

Setting: Mode

1 Select the item to set.

Items	Contents
On	Execute the toner applying operation
Off	Not to execute the toner applying operation

Initial setting: On

2 Press [Start] key to fix the setting.

Setting: Upper limit

1 Change the setting value by using [+] [-] keys or the numeric keys.

Items	Contents	Setting range
Value	Set the upper coverage limit of the toner applying amount for each operation mode.	0 to 2.0

Initial setting

Items	70 ppm	60 ppm	50 ppm	40 ppm
Value	2.0	2.0	2.0	2.0

2 Press [Start] key to fix the setting.

Completion

1 Press [Stop] key.

Return to the screen for selecting maintenance number.

U148 Drum refresh mode setting

(Message: Set Drum Refresh)

Contents

Set the mode to use the drum refresh in the user adjustment.

Purpose

Change the setting if the drum refresh is frequently operated.

Setting

1 Press [Start] key.

2 Change the setting value by using [+] [-] keys or the numeric keys.

Items	Contents	Setting range	Initial setting	Data variation
Mode	Set Auto drum refresh	0:Off 1: Short 2: Standard 3: Long	2	1

Press [Start] key to fix the setting.

Completion

1 Press [Stop] key.

Return to the screen for selecting maintenance number.

U155 Toner sensor output

(Message: Toner S Output)

Contents

Display the toner sensor output

Purpose

Check output value by each color when an image failure occurs.

Method

1 Press [Start] key.

2 Select the item to refer to.

Switched to each reference screen.

Items	Contents
Waste Toner	Display the waste toner sensor value
Toner	Display the difference between the toner sensor output value and the target value
Calibration	Executing the calibration for the waste toner
T/C Target	Adjust the toner replenishment amount so that the toner concentration becomes the T/C target sensor value

Method: Waste Toner

1 Display the waste toner sensor value.

Items	Contents
Full	Display the waste toner sensor value 1 (WTS1)

Method: Toner

1 Display the toner sensor value.

Items	Contents
Sensor(K)	Display the deference between black toner sensor output value and target

Method: Calibration

1 Display each setting values.

Items	Contents
Waste Toner	Display the waste toner weight detection sensor output value
None	Display the adjustment value (no bottle)
Empty	Display the adjustment value (empty bottle)
Level	Display the accumulate waste toner amount
Execute	Executing the calibration

Method: T/C Target

1 Display the T/C target sensor value.

Items	Contents
Sensor(K)	Toner replenishment amount is automatically adjusted so that the Black toner concentration becomes the T/C target sensor value

Completion

1 Press [Stop] key.

Return to the screen for selecting maintenance number.

U157 Developer drive time

(Message: Dev Time)

Contents

Display the developer drive time to refer for the toner concentration control correction.

Purpose

Execute to check the developer drive time since replacing the developer unit.

Method

1 Press [Start] key.

Display the developer drive time.

Items	Contents
K	Display the Black developer unit drive time.

Completion

1 Press [Stop] key.

Return to the screen for selecting maintenance number.

U158 Developer counter

(Message: Dev Cnt)

Contents

Display the developer counter

Purpose

Execute to check the developer unit usage status.

Method

1 Press [Start] key.

The developer count is displayed.

Items	Contents
K	Display the black developer counter.

Completion

1 Press [Stop] key.

Return to the screen for selecting maintenance number.

U159 Toner container function setting

(Message: Set Toner Func)

Description

Settings for waste toner box use of the BK toner container are performed.

Purpose

Display message to replace the BK toner container with the waste toner box, when the BK toner empty occurs When setting the JOB control according to the amount of toner in the waste toner box.

NOTE

In case that container cover lock release regularly, set it disable.

Method

1 Press [Start] key.

2 Select the item to set.

The screen for setting is displayed.

Items	Contents
Container Lock	Container Lock setting
Container UnlockDisp	Display setting of the toner container lock
Waste Box Setting	Setting reuse of the toner container as the waste toner box

Setting: Container Lock

1 Select the item to set.

Items	Contents
Off	Lock disabled
Low	Lock enabled: set the release timing to Toner Low
Empty	Lock enabled: set the release timing to Toner Empty

Initial setting: Empty

NOTE

Setting Off gets all container cover open when front cover open.

2 Press [Start] key to fix the setting.

Setting: Container Unlock Disp

1 Select the item to set.

Items	Contents
On	Display the lock release option on [System Menu][Adjust/Maintenance]
Off	Not display the lock release option on [System Menu][Adjust/ Maintenance]

Initial setting:

120V model: Off

220V-240V model: Off

2 Press [Start] key to fix the setting.

Setting: Waste Box Setting

1 Select the item to set.

2 Change the setting value by using [+] [-] keys or the numeric keys.

Items	Contents	Setting range	Initial setting	Data variation
Message	Set the message display to replace the waste toner box with the BK toner container	On/Off	On	-
Waste Toner Level *1	Set the waste toner amount to display message and stop job.	0 to 20	20	10%

*1: It can set only if the message setting is on.

NOTE

Ether waste toner replace message comes up or stops job, unless waste toner is below the waste toner level setting at timing of toner empty. (Replace message comes up if it is above the setting.)

Turn off/on message comes up after setting.

3 Press [Start] key to fix the setting.

Completion

1 Press [Stop] key.

Return to the screen for selecting maintenance number.

U161 Fuser temperature adjustment

(Message: Adj Fuser Temp)

Contents

Set the fuser temperature.

Purpose

Normally no need to change. However, change the setting as corrective measures for paper curl, creases and fusing failure on thick paper.

Method

1 Press [Start] key.

2 Select the item to set.

The screen for setting is displayed.

Items	Contents
Warm Up	Control temperature except at printing
Print	Control temperature at printing
Grain Mode	Control for the impalpable unevenness in glossiness
Ready Time Adjust	Setting of fuser temperature control in environment
Mixed Size Mode	Setting of the mixed size mode

Setting: Warm Up

1 Select the item to set.

2 Change the setting value by using [+] [-] keys or the numeric keys.

Items	Contents	Setting range
Ready(C)	Control temperature at displaying Ready (Center)	100 to 200
Ready(E)	Control temperature at displaying Ready (Edge)	100 to 200
Ready(P)	Control temperature at displaying Ready (Press)	0 to 200
Drive(C)	Stable temperature during driving (Center)	100 to 200
Wait(C)	Stable temperature during halt (Center)	100 to 200
Low Power(C)	Control temperature at low power consumption (Center)	0 to 200
F. S. Shift(C)	Full speed shift temperature (Center)	0 to 200
Pressure(C)	Press start temperature (Center)	0 to 200

Initial setting

項目	70ppm	60ppm	50ppm	40ppm
Ready(C)	175	170	150	135
Ready(E)	125	125	120	105
Ready(P)	30	30	30	30
Drive(C)	185	180	165	155
Wait(C)	185	180	165	155
Low Power(C)	85	85	85	85
F.S. Shift(C)	175	170	150	135
Pressure(C)	175	170	150	135

3 2Press [Start] key to fix the setting.

Setting: Print

1 Select the item to set.

2 Change the setting value by using [+] [-] keys or the numeric keys.

Items	Contents	Setting range
F. S. Print(C)	Temperature at maximum print speed (Center)	100 to 200

Initial setting

項目	70ppm	60ppm	50ppm	40ppm
F. S. Print(C)	185	175	170	160

3 Press [Start] key to fix the setting.

Setting: Grain Mode

1 Select the mode to set.

Items	Contents
Mode0	Current level (Nor special control)
Mode1	Improvement mode for the rough glossiness
Mode2	More improvement

Initial setting: Mode0

2 Press [Start] key to fix the setting.

Setting: Ready Time Adjust

1 Change the setting value by using [+] [-] keys or the numeric keys.

Items	Contents	Setting range	Initial setting
Value	Level of environmental correction (alpha)	0 to 4	4 (1 *1)

*1: KDA only (60/70 cpm)

2 Press [Start] key to fix the setting.

Setting: Mixed Size Mode

1 Select mode to set.

Items	Contents	Setting range	Initial setting	Data variation
Priority	Setting Mixed Size Mode	0: Image priority 1: Speed priority	0	-
Temperature Gap	Temperature Gap	5 to 50	40	1°C

Setting: Priority

1 Clicking [Priority] to change the mode.

In case of changing the setting of Priority to [Image], Temperature Gap is only for the reference.

2 Press [Start] key to fix the setting.

Setting: Temperature gap

1 Change the setting value by using [+] [-] keys or the numeric keys.

2 Press [Start] key to fix the setting.

Completion

1 Press [Stop] key.

Return to the screen for selecting maintenance number.

U164 Fuser unit history

(Message: Fuser History)

Description

Display the machine serial number and the fuser unit counter history.

Purpose

Execute to check the machine serial number and the fuser counter values.

Method

1 Press [Start] key.

Display the machine serial number and 3 items of the fuser counter history.

Items	Contents
Machine History1 to 3	Machine serial number history
Cnt History1 to 3	Fuser unit history

Completion

1 Press [Stop] key.

Return to the screen for selecting maintenance number.

U165 Fuser unit number

(Message: Fuser No.)

Description

Display the fuser unit number.

Purpose

Execute to check the fuser unit number.

Method

1 Press [Start] key.

Display the fuser unit number.

Completion

1 Press [Stop] key.

Return to the screen for selecting maintenance number.

U167 Clearing the fuser count

(Message: Clr Fuser Cnt)

Contents

Display and clear the fuser count, fuser discharge needle bias correction counter.

Purpose

Verify the fuser count after replacement. Also, clear the bias correction counts after replacing IH unit, fuser discharge needle.

Method

1 Press [Start] key.

The fuser count is displayed.

Items	Contents
Cnt	Display the fuser count
Release (Time)	Display the fuser unit drive release time (Min.)
Press (Time)	Display the fuser unit drive press time (Min.)
Press Half	Display the fuser unit drive press time (Half speed) (Min.)
Press 3/4	Display the fuser unit drive press time (3/4 speed) (Min.)
Correction	Display and change the fuser discharge needle bias correction counter.
Clear	Clear the fuser discharge needle bias correction counter. Clear the counter after replacing the fuser discharge needle unit.

Setting; Correction

1 Select [Correction].

2 Change the setting value by using [+] [-] keys or the numeric keys.

3 Press [Start] key to fix the setting.

Method: Clear

1 Select [Clear].

2 Press [Start] key.

Corrective fuser counter gets cleared.

Completion

1 Press [Stop] key.

Return to the screen for selecting maintenance number.

U169 Setting the fuser power source

(Message: Set Fuser PS)

Description

Display and set the control voltage of the IH PWB.

Purpose

Check the control voltage

When U021 is being executed, set the same voltage with the voltage of the IH controlPWB.

Setting

1 Press [Start] key.

Items	Contents
Set Fuser	Destination setting for Fuser

2 Press [Start] key.

Items	Contents	Setting range	Initial setting
Mode	Destination setting for Fuser	1: 100 V specifications 2: 200 V specifications 3: 120 V specifications 4: 110 V specifications	- (Destination)

Completion

1 Press [Stop] key.

Return to the screen for selecting maintenance number.

U193 Fuser drive control setting

(Message: Set Fuser Drv)

Contents

Display and set bias value for fuser belt charging needle

Purpose

Check or set bias current value for fuser belt surface as corrective measure for fuser static offset that comes from over charge on fuser belt.

IMPORTANT

Increasing the value reduce sticking toner on the fuser belt, but pay attention that too much change gets the charging needle to stick organic substance and it makes the static offset.
In case that this adjustment does not work, replace the fuser discharge unit and clear the count with U167.

Method: Bias

1 Select the item to set.

Items	Contents
Bias	Display and set bias value for fuser charging needle

Setting: Value

2 Change the setting value by using [+] [-] keys or the numeric keys.

Items	Contents	Setting range	Initial setting	Data variation
Value	Change the basic bias setting	0 to 200	20	1[uA]

Completion

1 Press [Stop] key.

Return to the screen for selecting maintenance number.

U199 Fuser temperature

(Message: Fuser Temp)

Contents

Fuser temperature is displayed.

Purpose

Execute to check the fuser temperature.

Method

1 Press [Start] key.

Fuser temperature is displayed.

Items	Contents
Heat Edge1	Display the heat roller edge temperature (°C)
Heat Center	Display the heat roller center temperature (°C)
Heat Middle	Display the heat roller center temperature (°C)
Press Center	Display the press roller center temperature (°C)

Completion

1 Press [Stop] key.

Return to the screen for selecting maintenance number.

U200 All LEDs lighting

(Message: All LEDs On)

Contents

All the LEDS on the operation panel are lit.

Purpose

Execute to check the operation panel LED lighting.

Method

1 Press [Start] key.

2 Select [Execute].

3 Press [Start] key.

4 All the LEDs on the operation panel are blinking.

5 Press [Stop] key to turn the display off.

Completion

1 Press [Stop] key.

Return to the screen for selecting maintenance number.

U201 Initializing the touch screen

(Message: Init Touch Panel)

Contents

Adjust touch screen detecting positions.

Purpose

Correct and check the touchscreen detecting points, after the panel PWB or the operation panel is replaced or when the detecting points are not aligned.

NOTE

In case that not able to get into Maintenance mode because of misalignment, press key behind operation panel for more than 3 seconds and start U201.

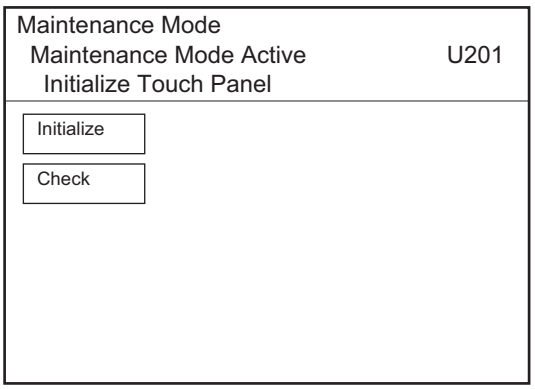

Method

1 Press [Start] key.

2 Select the item to execute.

3 Press [Start] key.

The screen for executing is displayed.

Items	Contents
Initialize	Automatically corrects the touch screen display position
Check	Check the touch screen display position

Method: Initialize

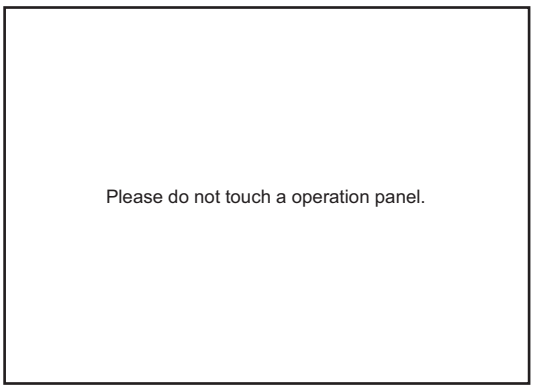

Do not touch the touch screen.

1 Press the center of indicated "+".

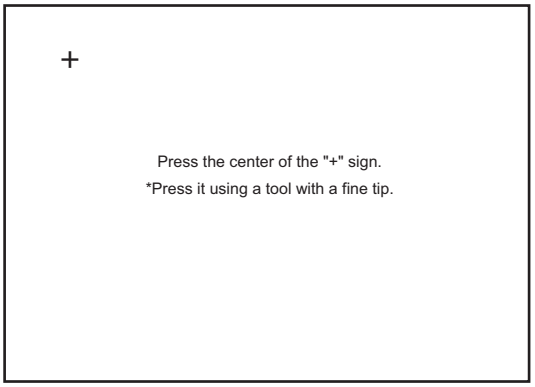

2 Press the center of indicated "+".

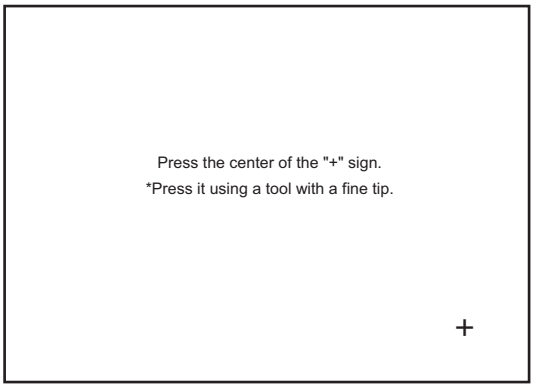

3 Press the center of indicated "+".

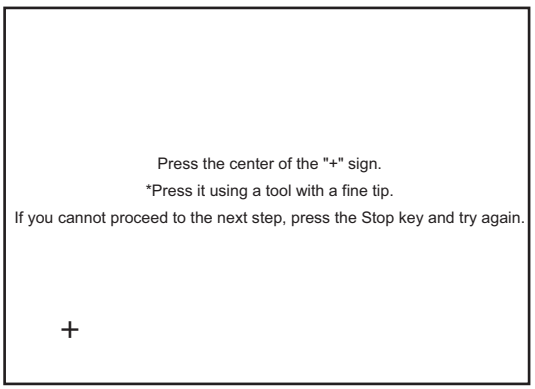

4 Press the center of indicated "+".

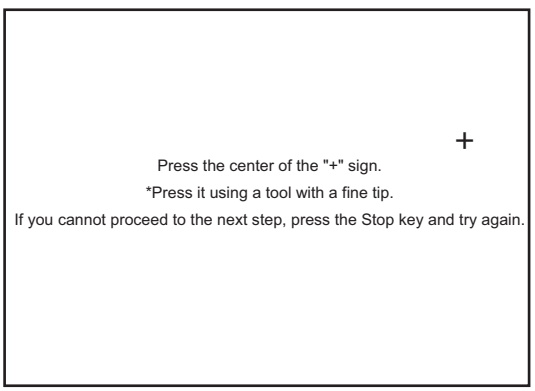

5 Press the center of indicated "+".

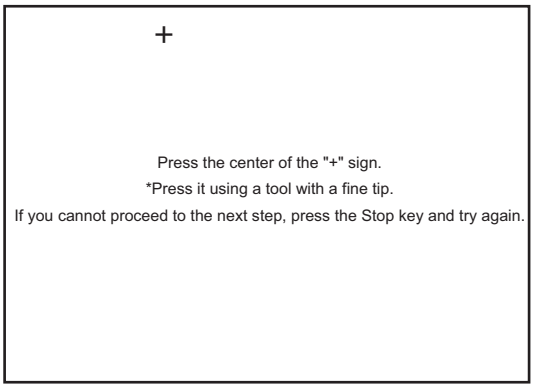

6 [Initialize Completed] appears after setting and the touch screen is automatically corrected.

7 After finishing setting, [Check] screen is automatically displayed.

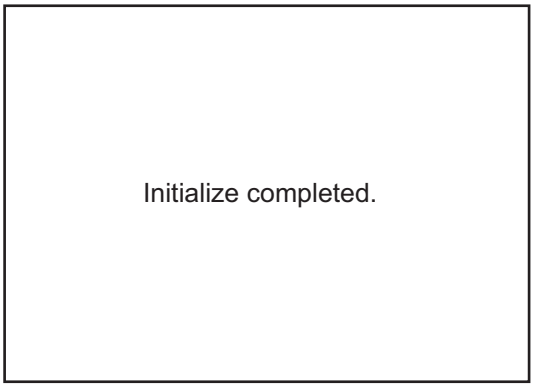

Method: Check

Single Tap Check

1 Press the center of indicated three "+", and then check the display position.

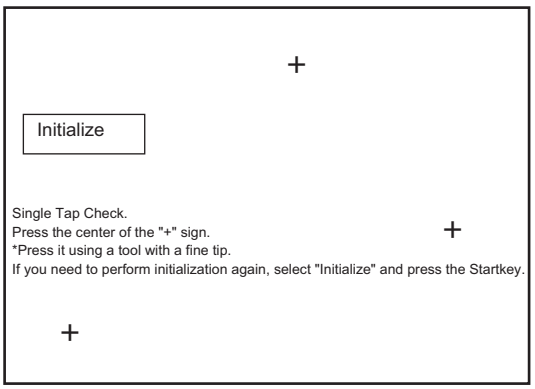

2 Check that the gap of the X and Y axis of the displayed coordinate is 6 or less.

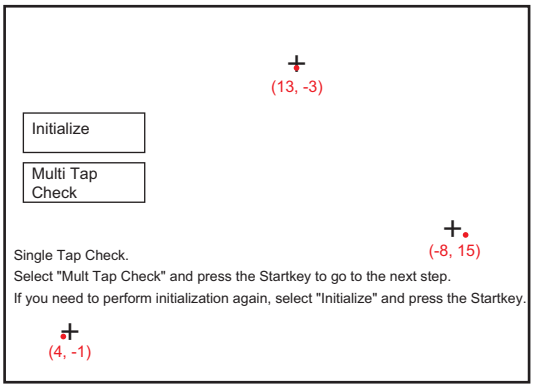

NOTE

If out of the specified value, select [Initialize] and press [Start] key to return to Step.1.

Multi Tap Check

1 Select [Multi Tap Check] and press [Start] key.

2 Press 2 points of [◎] simultaneously. (Step1)

Display the detected point with a red dot if it is out of the default value.

If out of the specified value, select [Initialize] and press [Start] key to return to Step.1.

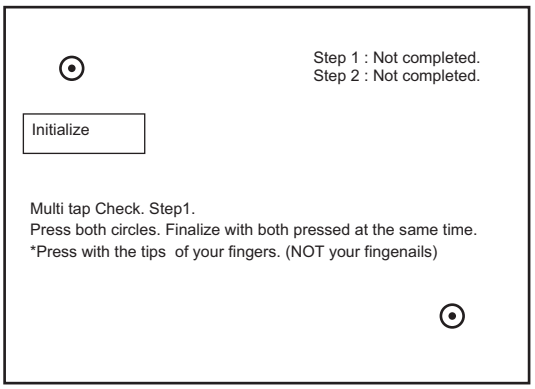

3 Press 2 points of [◎] simultaneously. (Step2)

[Completed] appears in Step1 and Step2 if it is within the default value.

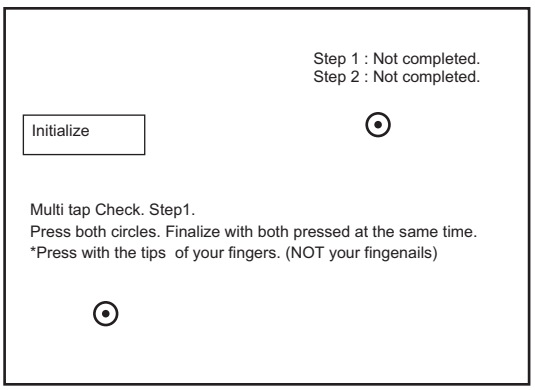

4 [Multi Tap Check completed.] appears when the setting is complete.

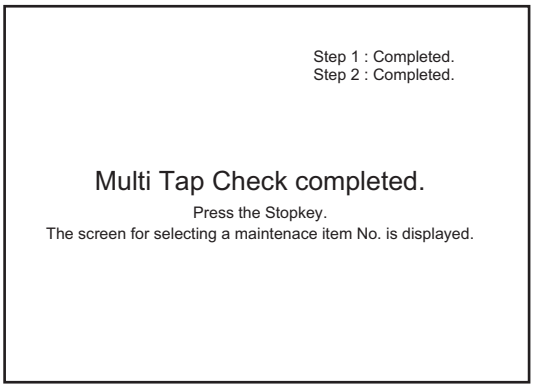

Completion

1 Press [Stop] key.

Return to the screen for selecting maintenance number.

U203 Check DP operation

(Message: Chk DP Ope)

Contents

Simulate the original conveying operation separately in the DP.

Purpose

Check the DP operation

Method

1 Press [Start] key.

2 Place an original in the DP if running this simulation with paper.

3 Select the scan speed

Items	Contents
Normal Speed	Normal scanning (600dpi)
High Speed	Scanning method

Method: Normal Speed/High Speed

1 Select the item to operate.

Items	Contents
CCD ADP	With paper, a single-sided original is fed to the image sensor
CCD RADP*1	With paper, a double-sided original is fed to the image sensor
CIS*2	With paper, a double-sided original is fed to the CIS
CCD ADP(Non-P)	Without paper, a single-sided original is fed to the image sensor (continuous operation)
CCD RADP(Non-P)*1	Without paper, a double-sided original is fed to the image sensor (continuous operation)
CIS(Non-P)*2	Without paper, a double-sided original is fed to the CIS (continuous operation)

*1: DP-7150 only *2: DP-7160/ DP-7170 only

2 Press [Start] key.

The operation starts.

3 Press [Stop] key to quit operation.

NOTE

When the printer is operating in other than [Non-P] mode, the screen remains running even after the paper feed operation is completed. To start the operation again, press the [Stop] key.

Completion

1 Press [Stop] key.

Return to the screen for selecting maintenance number.

U204 Key card/key counter setting

(Message: Set Card/Counter)

Contents

Set the optional key card or key counter connection.

Purpose

Execute when installing the key card or key counter.

Method

1 Press [Start] key.

2 Select the item to set.

The screen for setting is displayed.

Items	Contents
Device	Set the key card/counter connection.
Message *	Set the message indicated when the device is not installed.

*: Display in case of On for U206 On/Off Config

Setting: Device

1 Select the type of the optional counter.

Items	Contents
Key-Card	Key card installation
Key-Counter	Key counter installation
Key-Octpus-Card	Key Octpus card installation
Coin Vendor *	Parallel coin vendor installation
Off	Not installed

*: Display in case of Off for U206 On/Off Config

*: Display in case that designate cassette for FAX is not set by system menu.

Initial setting: Off

2 Press [Start] key to fix the setting.

3 Turn the power switch off then on. Wait more than 5 seconds between the power off and on.

Setting: Message

1 Select the item to set.

Items	Contents
Key Device	Prioritized display of the key device on the login screen when multiple devices are used.
Coin Vendor	Prioritized display of the coin vendor on the login screen when multiple devices are used .

Initial setting: Coin Vendor

2 Press [Start] key to fix the setting.

3 Turn the power switch off then on. Wait more than 5 seconds between the power off and on.

Completion

1 Press [Stop] key.

Return to the screen for selecting maintenance number.

Important

Operating conditions

Connect the coin vendor device to the parallel I/F on the key counter (MK-2). (So it is called Parallel coin vendor.)

If you want to use the Parallel coin vendor with "NewPanel Model", you must configure the following.

Item: Default Screen

- Setting: Accessibility Copy
- Supplemental note: Setting by [System Menu --> Device Settings --> Display Settings --> Default Screen]

Item: Function Key Assignment

- Setting: Function Key 1 to 3, Set to "None"
- Supplemental note: Setting by [System Menu --> Device Settings --> Function Key Assignment]

Item: Customize Taskbar

- Setting: Taskbar Button 1 to 4, Set to "None"
- Supplemental note: Setting by [System Menu --> Function Settings --> Home --> Customize Taskbar]

Use the default settings other than those described above. (Both CurrentPanel and NewPanel))

The related maintenance mode are shown below..

Number: U204

- Setting: Select "Parallel Coin Vender"
- Supplemental note: Exclusive from other Key devices. Since it is exclusive from the coin vendor in U206, the On/Off config in U206 is not displayed.

Number: U206

- Setting: OFF
- Supplemental note:

When U206 is set at On, “Parallel Coin Vendor” cannot be set by Key Device selection in U204.

When “Parallel Coin Vendor” is selected in U204, the unit price setting in U206 is disabled. (It can be set on the coin vendor itself only.)

Number: U260

- Setting: -
- Supplemental note: The billing timing to “Parallel Coin Vendor” does not associate with U253. It always charges at the primary paper feed.

Number: U253/276

- Setting: -
- Supplemental note: The settings of U253/U276 is disabled to “Parallel Coin Vendor”.

Use the default settings other than those described above. (Both CurrentPanel and NewPanel))

Target control specifications

Item: Functions to be charged

- Details: Copy , Simple Box print (print a document in USB memory) , Report print

Item: Type of charging

- Details:

The following combinations of types that can be set to “Parallel Coin Vendor” are stated below.

* Paper size: A3 or A4

* Color type: Color or Monochrome

* The behaviors are not guaranteed when print is performed under conditions other than that mentioned above.

Item: Charging timing

- Details: The timing of pulsing the charging instruction to the “Parallel Coin Vendor” is always the primary paper feeding.

Item: Input/Output Device

- Details:

Duplex print: Not supported (cannot be selected at the panel)

DP: Not supported (Behavior is not guaranteed.)

Finisher: Not supported (cannot be selected at the panel)

Item: Print permission judgment

- Details:

As “Parallel Coin Vendor” I/F specification, upon setting the information to the coin vendor at the timing when the information described in “Types of charging” is set and at the timing which is described in “Charging timing”, the notification of printing capability (Ready/NotReady) is returned.

* Whether there is a coin accepted or not cannot be determined at the MFP side.

Limitations/Special control

Item: System Menu

- Details:

When “Parallel Coin Vendor” is set, users are not allowed to enter System Menu.

* When a setting value in System Menu has been changed, it may not operate properly depending on the function.

Item: Maintenance mode

- Details: When Test print or Adjustment action be done in maintenance mode, “Parallel Coin Vendor” mode must set the “Off”.

Item: Non charge print limitation

- Details:

Host to print or FAX print are able to guarantee.

User need to set the “Off” in U204 for Host to print or FAX print.

Item: Authentication function

- Details: When “Parallel Coin Vendor” is used, User authentication and Accounting authentication are not available.

Item: Sleep Control

- Details: When “Parallel Coin Vendor” is used, the system does not transition to Sleep.

Item: Start conditions

- Details:

“Charging type” for “Parallel Coin Vendor” is set back to the default (A4Monochrome) at the end of the job. Therefore, if an enough amount of money for printing a sheet of A4 in monochrome is accepted, any job can be started.

When the accepted amount of money is less than the unit print price, a coin shortage error is displayed after the Start key is pressed.

Item: No detection of walkaway without taking the change

- Details: As stated in the section of “Print permission judgment”, since whether there is a coin accepted or not cannot be determined at the MFP side, it also cannot prompt the user to take the change at the end of the job.

Item: Automatic cassette switching

- Details:

Even if the same size papers are loaded in the multiple cassettes, when the printing system runs out of the papers in a cassette which paper feeding started with, it stops with an error. (The cassettes are not switched over.)

In order to switch over the cassettes automatically, set the cassette group in CCRX or with PRESCRIBE command so that the cassettes can be switched over.

Item: Substitute Feeding

- Details: Substitute feeding for paper empty error is not supported

U206 Set the coin vendor

(Message: Set Coin Mode)

Description

Set the optional Coin Vendor connection.

Also, Set the details such as the operation mode and unit price when the coin vendor is installed. (This is an optional device which is currently supported only by Japanese specification machines.)

Purpose

Run this maintenance item if a coin vendor is installed.

Method

1 Press [Start] key.

2 Select the item to set.

The screen for setting is displayed.

Items	Contents
On/Off Config*	Set the presence or absence of the coin vendor
No Coin Action	Behavior when change runs out during copying
Price	Charge per copy by size and color
Boot Mode	Setting activation mode
Apl Charge Mode	Extended charge unit price

*: No display in case that Coin vendor is selected in U204.

*: No display in case that designate cassette for FAX is set by system menu.

Setting: On/Off Config

1 Select the item to set.

Items	Contents
On	The coin vendor is installed
Off	The coin vendor is not installed

Initial setting: Off

2 Press [Start] key to fix the setting.

3 Turn the power switch off then on. Wait more than 5 seconds between the power off and on.

Setting: No Coin Action

1 Select the item to set.

Items	Contents
All Clear	All clear at coin shortage in printing.
Auto Clear	Auto clear at coin shortage in printing.
Off	Do nothing at coin shortage

Initial setting: Off

2 Press [Start] key to fix the setting.

Setting: Price

1 Select the item to set.

Items	Contents
Normal	Charge setting: Normal
AD	Charge setting: Commercial
Print	Charge setting: Print
Apl *	Charge setting: Extended

*: Display only if Apl Charge Mode is on

Setting: Normal / AD

1 Select the item to set.

]Items	Contents
B/W	Black & White

2 By using [+] [-] keys or the numeric keys, change the charger setting value.

Items	Contents	Setting range	Initial setting
A3-Ledger	A3/Ledger size	0 to 300	100
B4	B4 size	0 to 300	50
Card	Cardstock	0 to 300	30
Other	Others	0 to 300	50

Settable in 10-yen increments

Value of 0 allows non-restricted copying. (At a periodic maintenance, etc.)

3 Press [Start] key to fix the setting.

Setting: Print

1 Select the item to set.

Items	Contents
B/W	Black & White

2 Select the item to set.

3 By using [+] [-] keys or the numeric keys, change the charger setting value.

Items	Contents	Setting range	Initial setting
A3-Ledger	A3/Ledger size	0～300	10
B4	B4 size	0～300	10
Card	Cardstock	0～300	10
Other	Others	0～300	10

Settable in 10-yen increments

Value of 0 allows non-restricted copying. (At a periodic maintenance, etc.)

4 Press [Start] key to fix the setting.

Setting: Apl

1 Select the item to set.

2 By using [+] [-] keys or the numeric keys, change the charger setting value.

]Items	Contents	Setting range	Initial setting
Apl1	Expanded charging unit 1	0 to 300	10
Apl2	Expanded charging unit price 2	0 to 300	10
Apl3	Expanded charging unit price 3	0 to 300	10
Apl4	Expanded charging unit price 4	0 to 300	10
Apl5	Expanded charging unit price 5	0 to 300	10

3 Press [Start] key to fix the setting.

Setting: Boot Mode

1 Select the item to set.

]Items	Contents
Normal	Assign activation to normal mode
Copy Service	Assign activation to copy service display

Initial setting: Copy Service

2 Press [Start] key to fix the setting.

3 Turn the power switch off then on. Wait more than 5 seconds between the power off and on.

Setting: Apl Charge Mode

1 Select the item to set.

]Items	Contents
On	The extended charge unit is used.
Off	The extended charge unit is not used.

Initial setting: Off

2 Press [Start] key to fix the setting.

Completion

1 Press [Stop] key.

Return to the screen for selecting maintenance number.

U207 Operation key check

(Message: Chk Panel Key)

Contents

Check the operation panel keys.

Purpose

Check the operation of all the keys and LEDs on the operation panel.

Method

1 Press [Start] key to display execution window.

2 [Count 0] appears and turn on the LED in the leftmost row on operation panel.

3 Count up as pressing keys in order from the top in the leftmost row, and once press all keys in the row, next row to the right turn on if available.

The job separator LED is lit during execution and turns off when completing.

Completion

1 Press [Stop] key.

Return to the screen for selecting maintenance number.

U208 Setting the paper size for the side feeder

(Message: Set Deck PSz)

Description

Set the size of paper used in Side Paper Feeder

Purpose

To change the setting when installing the side paper feeder or the size of paper used in the side paper feeder is changed.

Setting

1 Press [Start] key.

2 Select the item to set.

The screen for setting is displayed.

]Items	Contents
Cass3*1	Setting the paper size for Cassette3
Cass4*1	Setting the paper size for Cassette4
Cass5*2	Setting the paper size for Cassette5

*1: Only for large capacity feeder PF-7150 (1,650 sheet x2), *2:Side feeder PF-7120 (3,500 sheet x1).

Setting

1 Select the item to set.

Items	Contents
A4	Paper size of the side paper feeder: A4
B5	Paper size of the side paper feeder: B5
Letter	Paper size of the side paper feeder: Letter

Initial setting: Letter (Inch specifications), A4 (Other specifications)

2 Press [Start] key to fix the setting.

3 Turn the power switch off then on. Wait more than 5 seconds between the power off and on.

Completion

1 Press [Stop] key.

Return to the screen for selecting maintenance number.

U211 Enhancement unit connection setting

(Message: Set EH Connection)

Contents

Execute the inner job separator installation setting.

Purpose

Execute when installing the inner job separator.

Make sure to set to [Off] to prevent wrong LED lighting when not installed.

Method

1 Press [Start] key.

2 Select [Inner Job Separator].

The screen for setting is displayed.

Items	Contents
Inner JobSepa	Inner job separator setting

Method

1 Select the item to set.

Items	Contents
On	Installing the inner job separator
Off	The inner job separator is not installed

Initial setting: Off

2 Press [Start] key to fix the setting.

3 Turn the power switch off then on. Wait more than 5 seconds between the power off and on.

Completion

1 Press [Stop] key.

Return to the screen for selecting maintenance number.

U221 USB host lock function setting

(Message: Set USB Host Lock)

Contents

Set ON/OFF of the USB Host lock function. The device connected to the USB host can not be recognized when it is ON.

Purpose

Change the setting according to the user's request

Method

1 Press [Start] key.

2 Select [Host Lock].

The screen for setting is displayed.

Items	Contents
Host Lock	Turns the USB Host lock function on/off

3 Select the item to set.

Items	Contents
On	The USB Host lock function is available
Off	The USB Host lock function is not available

Initial setting: Off

4 Press [Start] key to fix the setting.

5 Turn the power switch off then on. Wait more than 5 seconds between the power off and on.

Completion

1 Press [Stop] key.

Return to the screen for selecting maintenance number.

U222 Setting the IC card type

(Message: Set IC Card Type)

Contents

Set the ID card type

Purpose

Change the type of ID card

Setting

1 Press [Start] key.

2 Select the item to set.

Items	Contents
Other	Select when the ID card type is other than SSFC.
SSFC	Select when the ID card type is SSFC.

Initial setting: Other

SSFC: Shared Security Formats Cooperation

3 Press [Start] key to fix the setting.

Completion

1 Press [Stop] key.

Return to the screen for selecting maintenance number.

U223 Operation panel lock

(Message: Lock Panel Ope)

Contents

Execute setting the operation panel function.

Purpose

This mode is to prohibit the system menu and job cancel operations from the operation panel by the users other than administrator privileges.

Setting

1 Press [Start] key.

2 Select the item to set.

Items	Contents
Unlock	Unlock System Menu operation
Partial Lock 1	Lock System Menu operation and Input/Output setting
Partial Lock 2	Lock System Menu operation, Input/Output setting and Job execution setting
Partial Lock 3	Lock System Menu operation, Input/Output setting, Job execution setting and Paper settings
Lock	Lock System Menu operation and Job Cancel operation

Initial setting: Unlock

1 Press [Start] key to fix the setting.

Operation item	Partial Lock 1	Partial Lock 2	Partial Lock 3	Lock
Entering the maintenance mode	Permission	Permission	Permission	Permission
Switching to System Menu	Permission	Permission	Prohibition	Prohibition
Send, Send from Document Box	Permission	Permission	Permission	Permission
Switches the Yellow developer On/Off setting	Permission	Prohibition	Prohibition	Prohibition
Switch to registration/editing Document Box	Prohibition	Prohibition	Prohibition	Prohibition
Pressing [Stop] key	Permission	Permission	Permission	Prohibition
Pressing [Status/Job Cancel] key	Permission	Permission	Permission	Prohibition
Disconnect the FAX line	Permission	Permission	Permission	Prohibition

Completion

1 Press [Stop] key.

Return to the screen for selecting maintenance number.

U224 Setting Original Panel Display

(Message: Inst Orig Display)

Description

Change the image data and the message for the opening screen at the startup and the image data and for the service call screen to specified data.

Purpose

This mode is to customize a display as user's preference.

Setting

1 Write the image data or the message data to the USB drive.

2 Insert a USB drive into the USB drive slot.

3 Turn the power switch on.

4 Press [Start] key.

5 Select the item to set.

Items	Contents
Install	Install the image data or the message data
UnInstall	Restore the original image data or message data

6 Select the item to set.

Operation item	Partial Lock 1	Lock
Opening Img	Startup screen	Entire start display
Call Img	Service call screen	Graphic display area
Home Menu Img	Home Menu screen	Home Menu display area
Call Msg Top	Service call message 1	Message display area (top)
Call Msg Detail	Service call message 2	Message display area (descriptive area)

7 Press [Start] key.

Install or uninstall start.

8 [OK] is displayed when complete properly

Supplement 1: File information

Description	File name	Image size (in pixels)	File format
Startup screen	opening_ext_image.png	Length: 480 Width : 800	PNG
Service call screen	callwin_ext_image.png	Length: 200 Width : 180	PNG
Home Menu screen	menu_background.png	Length: 480 Width : 800	PNG
Service call message 1	callwin_ext_mes_top.txt	-	TEXT (Unicode)
Service call message 2	callwin_ext_mes_detail.txt	-	TEXT (Unicode)

NOTE

Supplement 1: Displaying Startup screen

An installed graphic file is displayed at power on or recovering from sleeping.

Graphics display on service call screen

An installed graphic file is displayed at service call.

How to change the message

Enter 4 letters “#562” using the numeric keypad during a service call display and service call messages 1 and 2 show up.

How to reset the message display

Back to the maintenance mode will automatically reset the message to the previous one.

IMPORTANT

The graphic file for startup screen must be opaque, because it may overlap on the background at recovering from sleeping.

UP to 4 MB in total size can be installed.

Completion

1 Press [Stop] key.

Return to the screen for selecting maintenance number.

U230 Optional device serial number

(Message: Device Serial No.)

Contents

Display the optional device serial number

Purpose

Specify the production lot from the serial number to make it help of investigation at problem occurrence.

Method

1 Press [Start] key.

Display the serial number.

Items	Contents
DP	Display the document processor serial number.
Finisher	Display the finisher serial number.
Booklet	Display the book let folder serial number.
PF1	Display the paper feeder 1 serial number.
PF2	Display the paper feeder 2 serial number.
Z-fold	Display the Z-fold serial number.
Inserter	Display the Inserter serial number.

Completion

1 Press [Stop] key.

Return to the screen for selecting maintenance number.

U234 Setting destination for punch

(Message: Set Punch Dest)

Contents

Set destination of the punch unit for the finisher.

Purpose

Execute when installing the punch unit for the destination different from the main unit.

Setting

1 Press [Start] key.

2 Select [Destination].

Items	Contents
Auto	Match the destination setting.
Japan Metric	Japan metric
Inch	North American inch specification
Europe Metric	European metric

3 Press [Start] key to fix the setting.

4 Turn the power switch off then on. Wait more than 5 seconds between the power off and on.

Completion

1 Press [Stop] key.

Return to the screen for selecting maintenance number.

U237 Finisher eject volume limit

(Message: Set Fin Limit)

Contents

Set the stacking count of the main tray and middle tray.

Purpose

Execute when stacking failure occurs.

Method

1 Press [Start] key.

2 Select [Main Tray].

3 Change the setting value by using [+] [-] keys or the numeric keys.

Items	Contents	Setting range	Initial setting	Data variation
Main Tray	Setting whether to detect the main tray full or not	0 to 1	0	-
Copies	Set the main tray stack capacity to detect full	5 to 50	15	10
Main Tray(Fd)	Setting whether to detect the Z-fold full or not	0 to 1	1	-
Copies(Fd)	Set the Z-fold stack capacity to detect full	5 to 20	10	8
Middle tray	Setting whether to detect the middle tray full or not	0 to 1	0	-

4 Press [Start] key to fix the setting.

5 Turn the power switch off then on. Wait more than 5 seconds between the power off and on.

Main Tray

Input value	4000-sheet finisher	100 sheet staple finisher	1000-sheet finisher
0	4000 sheets	4000 sheets	1000 sheets
1	2000 sheets	2000 sheets	500 sheets

Tray

Input value	4000-sheet finisher	100 sheet staple finisher	1000-sheet finisher
0	65 sheets	500 sheets	50 sheets
1	30 sheets	30 sheets	30 sheets

Completion

1 Press [Stop] key.

Return to the screen for selecting maintenance number.

U240 Finisher operation check

(Message: Chk Fin Ope)

Contents

Turn the finisher's motors and solenoids on.

Purpose

Execute for the finisher's motors and solenoids operation check.

Method

1 Press [Start] key.

2 Select the item to operate.

The screen for setting is displayed.

Items	Contents
Motor	Finisher motor operation check
Solenoid	Finisher solenoid operation check
Mail Box	Mail Box motor operation check
Booklet	Booklet folder operation check
Inner Shift Tray	Inner shift tray operation check
Inserter	Inserter operation check
Z-Fold	Z-Fold operation check

Method: Motor

1 Select the item to operate.

2 Press [Start] key.

The operation starts.

Items	Contents
Feed In(H)	Drive the DF paper entry motor at high speed.
Feed In(L)	Drive the DF paper entry motor at low speed.
Middle(H)	Drive the DF middle motor at high speed.
Middle(L)	Drive the DF middle motor at low speed.
Eject(H)	Drive the DF exit motor at high speed.
Eject(L)	Drive the DF exit motor at low speed.
Save(H) *1	Drives the DF relief drum motor at high speed
Save(L) *1	Drives the DF relief drum motor at low speed
Tray	Drive the DF tray motor. Operation chart: After descending to the lower limit, ascends and descends again when passing 1s after detecting the middle sensor off. ascends again when detecting the middle sensor on and stops at the upper limit.
Staple Move	Drive the DF slide motor.
Staple	Drive the DF staple motor.
Width Test(A3)	Drive the DF side registration motor 1, 2.
Width Test(LD)	Drive the DF side registration motor 1, 2.
Beat	Drive the DF paddle motor.
Eject Unlock(HP)	Drive the DF exit release motor at the home position.
Sort Test *1	Execute the DF shift operation.
Eject Unlock(30)	Drive the DF exit release motor at the 30-sheet bundle position
Eject Unlock(50)	Drive the DF exit release motor at the 50-sheet bundle position
Eject Unlock(Fix)	Drive the DF exit release motor at the fixed position
Eject Unlock(Full)	Drive the DF exit release motor at the full open position
Punch	Drive the drive motor
Punch Move	Drive the DF slide motor.
Eject Conv(H)	Drive the DF drum motor at high speed.
Eject Conv(L)	Drive the DF drum motor at low speed.
Cooling Fan *1	Drive exit fan.
Eject Up Pull	DF upper exit motor (draw-in)
Eject Down Pull	DF lower exit motor (draw-in)
Eject Up Feed	DF upper exit motor (conveying)
Eject Down Feed *2	Drive lower exit motor.
B Tray Eject(H) *2	Drive the DF tray exit motor at high speed.
B Tray Eject(L) *2	Drive the DF tray exit motor at low speed.
Tray Down *2	Descend Main Tray motor
Tray Width Init *2	Process tray width alignment initial operation

Items	Contents
Tray Cursor Init *2	Main Tray cursor initial operation
Pull Pressure *2	Drive the draw-in pressure motor
Match Pressure *2	Drive the DF match release motor
Match Coro *2	Drive the DF match pulley motor
Eject Guide *2	Drive the DF exit support guide
Tray Eject Paddle *2	Drive the exit paddle
Press Paper *2	Drive paper hold
Bundle Eject *2	Bundle exit operation
Bundle Up *2	Drive the bundle exit motor 1, 2

*1; Only for 4000 sheets DF, *2: Only for 100 sheets staple

Press [Stop] key to quit operation.

Method: Solenoid

1 Select the item to operate.

2 Press [Start] key.

The operation starts.

Items	Contents
Sub Tray *1, *3	Turn the DF feed-shift solenoid 1 on
Save Drum *1, *3	Turn the DF feed-shift solenoid 2 on
Booklet *1	Turn the DF feed-shift solenoid 3 on
Punch	Turn the punch solenoid on
Three Fold *1	Turn the BF feed-shift solenoid on
Press Paper *2	Turn the DF paper press solenoid
Punch Tank *2	Turn the punch dust vibration solenoid on
Eject Guide (REM) *3	Turn the exit switch solenoid REM on
Eject Guide (RET) *3	Turn the exit switch solenoid RET on

*1; Only for 4000 sheets DF, *2: Only for the Inner DF, *3: Only for 100 sheets staple

Press [Stop] key to quit operation.

Method: Mail Box

1 Select the item to operate.

2 Press [Start] key.

The operation starts.

Items	Contents
Conv	Drive the MB drive motor to convey paper
Branch	Drive the MB drive motor for feed-shift

Press [Stop] key to quit operation.

Method: Booklet

1 Select the item to operate.

2 Press [Start] key.

The operation starts.

Items	Contents
Folding	Drive the BF main motor.
Blade	Drive the BF blade motor.
Bundle Up	Drive the BF adjuster motor 2
Bundle Down	Drive the BF adjuster motor 1
Staple	Drive the DF staple motor.
Width Test(A3)	Execute the side registration test (A3).
Width Test(LD)	Execute the side registration test (LD).
Feed In	Drive the BF paper entry motor.
Paddle *1	Drive the paddle motor.
Feed Tray *1	Drive the conveying tray motor.
EjectPressUnlock *1	Drive exit pressure release motor.
Feed Fan *1	Drive conveying fan

*1: 100 sheets staple only

Press [Stop] key to quit operation.

Method: Inner Shift Tray

1 Press [Start] key.

The operation starts.

Items	Contents
Inner shift tray	Drive the Inner shift tray motor.

Press [Stop] key to quit operation.

Method: Inserter

1 Select the item to operate.

2 Press [Start] key.

The operation starts.

Items	Contents
Upper Tray Feed	Drive the Upper tray feed motor
Upper Tray Resist	Drive the Upper tray regist motor
Upper Tray Lift	Drive the Upper tray lift motor
Vertical Feed U	Drive the Conveying motor
Lower Tray Feed	Drive the Lower tray feed motor
Lower Tray Regist	Drive the Lower tray regist motor
Lower Tray Lift	Drive the Lower tray lift motor
Vertical Feed L	Drive the Confluence conveying motor
Horizontal Feed H	Drive the Horizontal feed high speed motor
Horizontal Feed L	Drive the Horizontal feed low speed motor

Press [Stop] key to quit operation.

Method: Z-Fold

1 Select the item to operate.

2 Press [Start] key.

The operation starts.

Items	Contents
Fold	Drive the Fold motor
Second Fwd/Rvs	Drive the Second forward/reverse motor
Fold Eject Tray	Drive the Folding exit tray motor
Inlet Branch	Drive the Inlet branch motor
Inlet	Drive the Inlet motor
Regist Front	Drive the Regist front motor
Paper Stack	Drive the Paper stacking motor
Regist	Drive the Regist motor
Fold Branch	Drive the Folding branch motor
Entra Prevent	Drive the Entrainment prevent motor
First Transfar	Drive the first transfer motor
Incr Fold	Drive the increase folding motor
Second Transfer	Drive the second transfer motor
Eject Branch	Drive the exit branch motor
Jam LED	Turn the Jam processing induction LED (Collective)

Press [Stop] key to quit operation.

Completion

1 Press [Stop] key.

Return to the screen for selecting maintenance number.

U241 Finisher switch check

(Message: Chk Fin Switch)

Contents

Display the status of finisher's switches and sensors operation.

Purpose

Execute for the finisher's switches and sensors operation check.

Method

1 Press [Start] key.

2 Select the item to operate.

The screen for setting is displayed.

Items	Contents
Finisher	Check the finisher switch and sensor operation.
Mail Box	Check the mail box switch and sensor operation.
Booklet	Check the booklet switch and sensor operation.
Punch	Check the punch unit switch and sensor operation.
Inner Shift Tray	Check the inner shift tray switch and sensor operation
Inserter	Check the inserter switch and sensor operation
Z-Fold	Check the Z-Fold unit switch and sensor operation

Method: Finisher

1 Check the switches and sensors by manually turning them on/off.

The switch indication is inversed when the switch is detected.

Items	Contents
Front Cover	DF front cover sensor
Eject Cover	DF exit cover sensor
Top Cover *2	DF upper cover sensor
Tray U-Limit *3	DF tray sensor 1
Tray HP2 *1	DF tray sensor 2
Tray Middle *3	DF tray sensor 3
Tray L-Limit	DF Tray sensor 4
Tray L-Limit(BL) *1	DF tray sensor 5
Tray Top *3	DF tray upper side sensor
HP	DF paper entry sensor
Sub Tray Eject *1	DF sub tray exit sensor
Middle Tray Eject *3	DF middle sensor
Drum *1	DF drum sensor
Staple HP	DF slide sensor
Middle Tray	DF bundle exit sensor
Width Front HP	DF width adjustment 1
Width Tail HP	DF width adjustment 2
Bundle Eject HP	DF bundle exit sensor
Match Paddle	DF adjustment sensor
Lead Paddle	DF paddle sensor
Shift Front HP *1	DF shift sensor 1
Shift Tail HP *1	DF shift sensor 2
Shift Unlock HP *1	DF shift release sensor
Sub Tray Full *1	DF sub tray full sensor
Shift Set *1	DF shift set sensor
Press Paper Up *4	DF press paper sensor 1
Press Paper Down *4	DF press paper sensor 2
Release *4	DF installation detection switch
Middle *5	Middle sensor
Paper Guide HP *5	Paper support guide HP sensor.
Rear Beat HP*5	DF trail press HP sensor.
Eject Paddle HP*5	DF paper exit paddle HP sensor
Press Paper HP *5	Paper press HP sensor
Match Coro HP *5	DF match pulley pressure release HP sensor

Items	Contents
Pull Coro HP *5	DF draw-in pulley pressure release HP sensor
Eject Press HP *5	Exit pressure release HP sensor
Bundle Eject HP1*5	Bundle exit HP sensor 1
Bundle Eject HP2*5	Bundle exit HP sensor 2
Eject *5	Exit sensor
Staple Tank *5	Staple waste tank sensor
Staple Tank Full *5	Staple waste tank full sensor
Feed In Timing *5	Entry timing sensor
Drum Timing *5	Drum timing sensor

*1; Only for 4000 sheets DF, *2: Only for 1000 sheet DF, *3: Except inner DF, *4: Only for inner DF, *5: Only for 100 sheets staple

Method: Mail Box

1 Check the switches and sensors by manually turning them on/off.

The switch indication is inversed when the switch is detected.

Items	Contents
Eject	MT tray exit sensor 2
Cover	MT cover open close switch
Over Flow1	MT tray sensor 1
Over Flow2	MT tray sensor 2
Over Flow3	MT tray sensor 3
Over Flow4	MT tray sensor 4
Over Flow5	MT tray sensor 5
Over Flow6	MT tray sensor 6
Over Flow7	MT tray sensor 7
Motor HP	MB home position switch

Method: Booklet

1 Check the switches and sensors by manually turning them on/off.

The switch indication is inversed when the switch is detected.

Items	Contents
HP	BF paper entry sensor
Eject	BF exit sensor
Paper	BF paper sensor
Tray Full	BF tray full sensor
Bundle Up HP	BF adjustment sensor 2
Bundle Down HP	BF adjustment sensor 1
Width Up HP	BF side registration sensor 1
Width Down HP	BF side registration sensor 2
Blade HP	BF blade sensor
Tray	BF tray open/close detection switch
Set	DF shift set sensor
left Guide	BF left cover sensor:
Vertical Feed	Vertical feed sensor
Paddle HP *1	Paddle HP sensor
Eject Press HP *1	Exit pressure release HP sensor
Feed Tray *1	Conveying tray paper sensor

*1: 100 sheets staple only

Method: Punch

1 Check the switches and sensors by manually turning them on/off.

The switch indication is inversed when the switch is detected.

Items	Contents
Punch HP *1	PH home position sensor
Edge Face 1 *1	PH paper edge sensor 1
Edge Face 2 *1	PH paper edge sensor 2
Edge Face 3 *1	Punch paper edge sensor 3
Edge Face 4 *1	Punch paper edge sensor 4
Tank	Punch tank set switch
Tank Full 1	PH dust tank full sensor
HP *2	PH paper entry sensor

*1: Except inner DF, *2: Inner DF only

Method: Inner Shift Tray

1 Press [Execute] to perform the inner shift tray operation for turning on/off the switches and sensors.

The switch indication is inversed when the switch is detected.

Items	Contents
HP	Inner Shift Tray HP sensor
Execute	Execution of the inner shift tray operation

Method: Inserter

1 Press [Execute] to perform the inner shift tray operation for turning on/off the switches and sensors.

The switch indication is inversed when the switch is detected.

Items	Contents
Upper Tray Feed	Upper tray feed sensor
Upper Tray Regist	Upper tray regist sensor
Upper Tray Lift U	Upper tray pickup sensor
Upper Tray Lift L	Upper tray lower limit sensor
Upper Tray Paper	Upper tray paper detection sensor
Upper Tray Large	Upper tray large size paper length detection sensor
Upper Tray Remain	Upper tray remaining amount sensor
Lower Tray Feed	Lower tray feed sensor
Lower Tray Regist	Lower tray regist sensor
Lower Tray Lift U	Lower tray pickupsensor
Lower Tray Lift L	Lower tray lower limit sensor
Lower Tray Paper	Lower tray paper detection sensor
Lower Tray Large	Lower tray large size paper length detection sensor
Lower Tray Remain	Lower tray remaining amount sensor
Front Cover	Front cover sensor
Vertical Cover	Vertical cover sensor
HP	Inserter HP sensor
Confluence	Confluence sensor
Eject	Exit sensor

Method: Z-Fold

1 Press [Execute] to perform the inner shift tray operation for turning on/off the switches and sensors.

The switch indication is inversed when the switch is detected.

Items	Contents
Eject Tray	Exit tray sensor
Inlet	Inlet sensor
Regist Front	Regist front sensor
Paper Stack	Paper stack sensor
Regist	Regist sensor
First Fwd/Rvs	First Forward/Reverse sensor
Purge	Purge sensor
Second Fwd/Rvs	Second Forward/Reverse sensor
Fold Back	Fold back sensor
Incr Fold	Increase fold sensor
Relay Eject	Relay exit sensor
Eject	Exit sensor
Full	Full sensor
Inlet Branch	Inlet branch sensor
Fold Branch	Fold branch sensor
Entra Prevent	Entrainment prevent sensor
Incr Fold HP	Increase fold HP sensor
Eject Branch HP	Exit branch HP sensor
Eject Switch	Exit switch sensor
Relay Switch	Relay switch sensor
Regist front Switch	Regist front switch sensor
Incr Fold Switch	Increase fold switch sensor
Regist Switch	Regist switch sensor
Fold Switch	Fold switch sensor
Interlock Switch	Interlock switch sensor
Inlet Switch	Inlet switch sensor

Completion

1 Press [Stop] key.

Return to the screen for selecting maintenance number.

U243 Checking the DP motor

(Message: Chk DP Motor)

Contents

Drive the motor or solenoid of the document processor.

Purpose

Check the operation of the motor or solenoid of the document processor.

Method

1 Press [Start] key.

2 Select the item to operate.

Items	Contents
Feed Motor	Drive the DP paper feed motor for normal rotation
Conv Motor	DP conveying motor
Lift Motor	DP lift motor
Eject motor	DP exit motor
Regist Motor *1	DP registration motor
DP Fan *1	DP drive fan
CIS Fan *1	DP CIS fan

*1:DP-7160/7170 only

3 Press [Start] key. Each operation starts.

Press [Stop] key to quit operation.

Completion

1 Press [Stop] key.

Return to the screen for selecting maintenance number.

U244 DP switch check

(Message: Chk DP Switch)

Contents

Display each switch and sensor status of the document processor.

Purpose

Execute to check the operation of switches and sensors of the document processor.

Method

1 Press [Start] key.

2 Check the switches and sensors by manually turning them on/off.

The switch indication is inversed when the switch is detected.

Items	Contents
Feed	Check DP feed sensor.
Regist *3	Check DP registration sensor.
Timing	Check DP timing sensor.
CIS Head *2	Check DP timing sensor.
Set	Check DP original length sensor.
Longitudinal	Check DP original length sensor.
Lift U-Limit	Check DP lift upper limit sensor.
Lift L-Limit	Check DP lift lower limit sensor.
Cover Open	Check DP top cover switch.
Open	Check DP open/close switch.
Eject	Check DP exit sensor.
Branch Motor HP *1	Check DP feedshift sensor.
Slant *4	Check DP slant sensor
Flip Up *4	Check DP flip up sensor

*1: DP-7150 only, *2:DP-7160/7170 only, *3: DP-7150 only, *4: DP-7170 only

Completion

1 Press [Stop] key.

Return to the screen for selecting maintenance number.

U246 Finisher adjustment

(Message: Adj Fin)

Contents

Execute adjustment for the finisher installation.

Purpose

- Punch registration stop timing adjustment in the punch mode.

Adjust if paper skews or is folded in Z-shape in the punch mode.

- Stop timing adjustment of punch position

Adjust if the punch hole position is not as specified in the punch mode.

- Center position timing adjustment

Adjust the punch center position if it is shifted in the punch mode.

- Home position adjustment of front/rear width alignment.

Adjust when the consistency of the side registration guides and paper is not good and paper jam occurs.

- Home postilion adjustment of front/rear shift

No width alignment in exit paper

- Home position adjustment of front/rear staple

Adjust if the staple is not centered on the paper in the staple mode.

- Adjustment of relief drum

In case 2-ply or triply sheets on the relief drum are shifted, adjust it.

- Pull-in timing and amount adjustment

Adjust the leading edge timing of up to the 3rd sheet and 4th sheet and after

- Front/Rear bind staple adjustment

Adjust the front/rear staple position if it is different from the specified in the staple mode

- Punch entry registration thick paper correction

Adjust the skew conveying or punch position shift on thick paper in the PH mode

- Home position adjustment of upper/lower side width alignment

Adjust when the consistency of the side registration guides and paper is not good and paper jam occurs.

- Adjustment of booklet stapling position

Adjust the booklet stapling position in the stitching mode if the position is not proper.

- Adjustment of center folding position

Adjust the center folding position in the stitching mode if the position is not proper.

- Adjustment of tri- folding position

Adjust the tri-folding position in the stitching mode if the position is not proper.

- Adjustment of bundle down position

Adjust the position of the BF lower moving plate according to paper length

Setting

1 Press [Start] key.

2 Select the item to set.

The screen for setting is displayed.

Items	Contents
Finisher	Setting the finisher adjustment value
Booklet	Setting the booklet adjustment value
Inserter	Setting the inserter regist loop adjustment value
Z-Fold	Setting the Z-Fold unit adjustment value

Setting: Finisher

1 Select the item to set.

Items	Contents
Punch Regist	Punch registration stop timing adjustment in the punch mode.
Punch Feed	Stop timing adjustment of punch position
Punch Width *2	Center position timing adjustment
Width Front HP	Front width adjuster home position adjustment
Width Tail HP	Rear width adjuster home position adjustment
Shift Front HP *1	Adjustment of front shift home position
Shift Tail HP *1	Adjustment of rear shift home position
Staple HP	Front/rear staple home position adjustment
Save Drum(2nd F) *3	Relief drum adjustment value (2nd sheet entry)
Save Drum(3rd C) *3	Relief drum adjustment value (3rd sheet confluence)
Save Drum(2nd C)*3	Relief drum adjustment value (2nd sheet confluence)
Pull Timing *3	Pulling start timing (4th sheet and after)
Pull Amount *3	Pulling level adjustment (4th sheet and after)
Pull Timing(Conf) *3	Pulling start timing (Confluence: up to the 3rd sheet)
Pull Amount(Conf) *3	Pulling level adjustment (Confluence: up to the 3rd sheet)
Front Bind Staple *3	Front bind adjustment
Back Bind Staple *3	Back bind adjustment
Punch(T) Resist *3	Punch entry registration thick paper correction

*1; Only for 4000 sheets DF, *2: Except Inner DF, *3: Only for 100 sheets staple

Setting: Punch Regist

1 Select [Punch Regist].

2 Change the setting value by using [+] [-] keys or the numeric keys.

Content to adjust	Setting range	Initial setting	Data variation
Adjusting the punch registration stop timing	-20 to 20	0	0.25 mm

Increase the value if paper is skewed (sample 1).

Reduce the set value if paper is folded in a Z-shape (sample2).

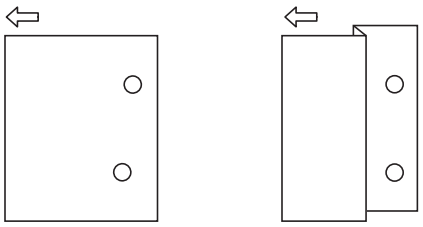

3 Press [Start] key to fix the setting.

Setting: Punch Feed

1 Select [Punch Feed].

2 Change the setting value by using [+] [-] keys or the numeric keys.

Content to adjust	Setting range	Initial setting	Data variation
Adjusting the punch stop timing	-10 to 10	0	0.60 mm *1 0.50 mm *2

*1: 1000/4000-sheet finisher only, *2: Inner finisher only

Increase the specified value if the punch position is shorter than specified.

Reduce the specified value if the punch position is longer than specified.

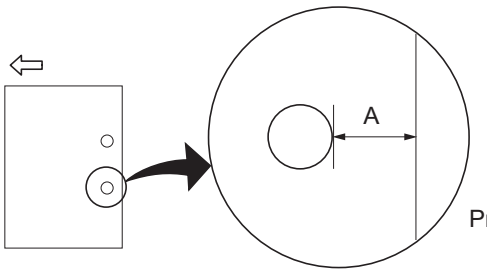

Preset value A : 9.75 mm (metric model)
0.25 inch (6.25 mm) (inch model)

3 Press [Start] key to fix the setting.

Setting: Punch Width

1 Select [Punch Width].

2 Change the setting value by using [+] [-] keys or the numeric keys.

Content to adjust	Setting range	Initial setting	Data variation
Punch center position timing adjustment	-4 to 4	0	0.52 mm

Increase the set value if the punch position is shifted to the machine front side (sample1).
Lower the set value if the punch position is shifted to the machine rear side (sample2).

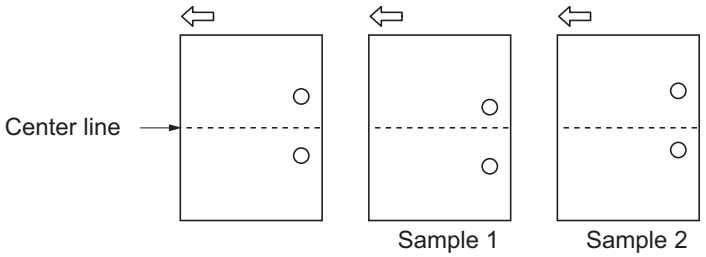

3 Press [Start] key to fix the setting.

Setting: Width Front HP / Width Tail HP

1 Select [Width Front HP] or [Width HP].

2 Change the setting value by using [+] [-] keys or the numeric keys.

Content to adjust	Setting range	Initial setting	Data variation
Front width adjuster home position adjustment	-30 to 30	0	0.1 mm
Rear width adjuster home position adjustment	-30 to 30	0	0.1 mm

3 Press [Start] key to fix the setting.

4 Press [Stop] key and return to the screen for selecting the maintenance item number.

5 Enter U240 and select [Motor] and then [Width Test(A3)].

6 The width guides of the center-folding unit will move to A3-size position.

7 Insert paper into the side registration guides to check the consistence.

8 Repeat the above adjustment until paper is properly in position.

Setting: Shift Front HP/Tail HP

1 Select [Width Front HP] or [Width HP].

2 Change the setting value by using [+] [-] keys or the numeric keys.

Content to adjust	Setting range	Initial setting	Data variation
Adjustment of front shift home position	-30 to 30	0	0.1 mm
Adjustment of rear shift home position	-30 to 30	0	0.1 mm

3 Press [Start] key to fix the setting.

4 Press [Stop] key and return to the screen for selecting the maintenance item number.

5 Enter U240 and select [Motor] and then [Sort Test].

6 Repeat the above adjustment until paper is properly in position.

Setting: Staple HP

1 Select [Staple HP].

2 Change the setting value by using [+] [-] keys or the numeric keys.

Content to adjust	Setting range	Initial setting	Data variation
Front/rear staple home position adjustment	-30 to 30	0	0.1 mm

Increase the set value if the staple position is shifted to the machine front side (sample1).
Lower the set value if the staple position is shifted to the machine rear side (sample2).

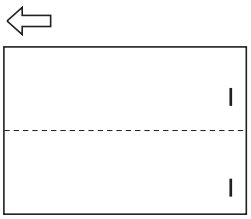

Sample 1

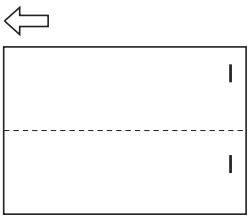

Sample 2

3 Press [Start] key to fix the setting.

Setting: Save Drum(2nd F)

1 Select [Save Drum(2nd F)]

2 Change the setting value by using [+] [-] keys or the numeric keys.

Content to adjust	Setting range	Initial setting	Data variation
Relief drum adjustment value (2nd sheet entry)	-15 to 15	0	0.3 mm

3 Press [Start] key to fix the setting.

Setting: Save Drum(3rd C)

1 Select [Save Drum(3rd C)]

2 Change the setting value by using [+] [-] keys or the numeric keys.

Content to adjust	Setting range	Initial setting	Data variation
Relief drum adjustment value (3rd sheet confluence)	-15 to 15	0	0.3 mm

3 Press [Start] key to fix the setting.

Setting: Save Drum(2nd C)

1 Select [Save Drum(2rd C)]

2 Change the setting value by using [+] [-] keys or the numeric keys.

Content to adjust	Setting range	Initial setting	Data variation
Relief drum adjustment value (3rd sheet confluence)	-15 to 15	0	0.15 mm

3 Press [Start] key to fix the setting.

Setting: Pull Timing

1 Select [Pull Timing]

2 Change the setting value by using [+] [-] keys or the numeric keys.

Content to adjust	Setting range	Initial setting	Data variation
Pulling start timing	0 to 30	0	2 msec

3 Press [Start] key to fix the setting.

Setting: Pull Amount

1 Select [Pull Amount]

2 Change the setting value by using [+] [-] keys or the numeric keys.

Content to adjust	Setting range	Initial setting	Data variation
Pulling level adjustment	0 to 30	0	2 msec

3 Press [Start] key to fix the setting.

Setting: Pull Timing(Conf)

1 Select [Pull Timing(Conf)]

2 Change the setting value by using [+] [-] keys or the numeric keys.

Content to adjust	Setting range	Initial setting	Data variation
Pulling start timing (Confluence)	0 to 30	0	2 msec

3 Press [Start] key to fix the setting.

Setting: Pull Amount(Conf)

1 Select [Pull Amount(Conf)]

2 Change the setting value by using [+] [-] keys or the numeric keys.

Content to adjust	Setting range	Initial setting	Data variation
Pulling level adjustment (Confluence)	0 to 30	0	2 msec

3 Press [Start] key to fix the setting.

Setting: Front Bind Staple

1 Select [Front Bind Staple]

2 Change the setting value by using [+] [-] keys or the numeric keys.

Content to adjust	Setting range	Initial setting	Data variation
Front bind adjustment	-30 to 30	0	0.19 mm

3 Press [Start] key to fix the setting.

Setting: Back Bind Staple

1 Select [Back Bind Staple]

2 Change the setting value by using [+] [-] keys or the numeric keys.

Content to adjust	Setting range	Initial setting	Data variation
Back bind adjustment	-30 to 30	0	0.19 mm

3 Press [Start] key to fix the setting.

Setting: Punch(T) Resist

1 Select [Punch(T) Resist]

2 Change the setting value by using [+] [-] keys or the numeric keys.

Content to adjust	Setting range	Initial setting	Data variation
Punch entry registration thick paper correction	-20 to 20	0	0.3 mm

3 Press [Start] key to fix the setting.

Method: Booklet

1 Select the item to set.

Items	Contents
Width Up HP	Adjustment of upper side registration home position
Width Down HP	Adjustment of lower side registration home position
Staple Pos1	Adjustment of booklet stapling position for A4/Letter size
Staple Pos2	Adjustment of booklet stapling position for B4/Legal size
Staple Pos3	Adjustment of booklet stapling position for A3/Ledger/8K size
Booklet Pos1	Adjustment of center folding position for A4/Letter size
Booklet Pos2	Adjustment of center folding position for B4/Legal size
Booklet Pos3	Adjustment of center folding position for A3/Ledger/8K size
Three Fold	Adjustment of tri- folding position
Bundle Down *1	Bundle down position adjust value

*1: 100 sheets staple only

Setting: Width Up HP/Width Down HP

1 Select [Width Up HP] or [Width Down HP].

2 Change the setting value by using [+] [-] keys or the numeric keys.

Content to adjust	Setting range	Initial setting	Data variation
Adjustment of upper side registration home position	-15 to 15	0	0.34 mm
Adjustment of lower side registration home position	-15 to 15	0	0.34 mm

3 Press [Start] key to fix the setting.

4 Press [Stop] key and return to the screen for selecting the maintenance item number.

5 Enter U240 and select [Booklet] and then [Width Test(A3)].

6 The width guides of the center-folding unit will move to A3-size position.

7 Insert paper into the side registration guides to check the consistence.

8 Repeat the above adjustment until paper is properly in position.

Setting: Staple Pos1/ 2/ 3

1 Select [Staple Pos1], [Staple Pos2] or [Staple Pos3].

2 Change the setting value by using [+] [-] keys or the numeric keys.

Content to adjust	Setting range	Initial setting	Data variation
Adjustment of booklet stapling position for A4/Letter size	-15 to 15	0	0.32 mm
Adjustment of booklet stapling position for B4/Legal size	-15 to 15	0	0.32 mm
Adjustment of booklet stapling position for A3/Ledger/ 8K size	-15 to 15	0	0.32 mm

Increase the set value if the staple position is shifted to the right side (sample 1).

Decrease the set value if the staple position is shifted to the left side (sample 2).

Reference value A: A4, Letter: Length of paper × 1/2 ± 2 mmA3, Ledger, B4: Length of paper × 1/2 ± 3 mm

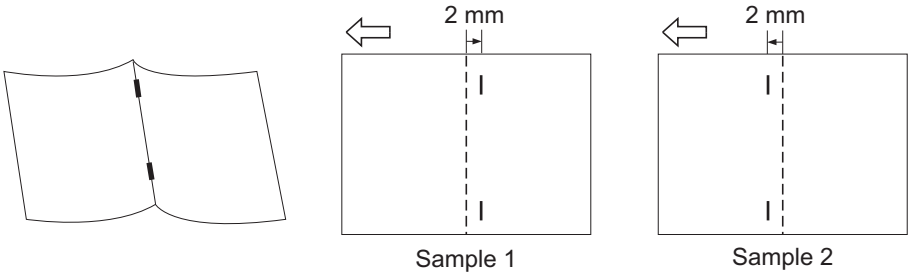

3 Press [Start] key to fix the setting.

Setting: Booklet Pos1/ 2/ 3

1 Select [Booklet Pos 1], [Booklet Pos 2] or [Booklet Pos 3].

2 Change the setting value by using [+] [-] keys or the numeric keys.

Content to adjust	Setting range	Initial setting	Data variation
Adjustment of center folding position for A4/Letter size	-15 to 15	0	0.32 mm
Adjustment of center folding position for B4/Legal size	-15 to 15	0	0.32 mm
Adjustment of center folding position for A3/Ledger/8K size	-15 to 15	0	0.32 mm

Increase the set value if the center folding position is shifted to the right side (sample 1).

Decrease the set value if the center folding position is shifted to the left side (sample 2).

Reference value A: A4, Letter: Length of paper × 1/2 ± 2 mm

A3, Ledger, B4: Length of paper × 1/2 ± 3mm

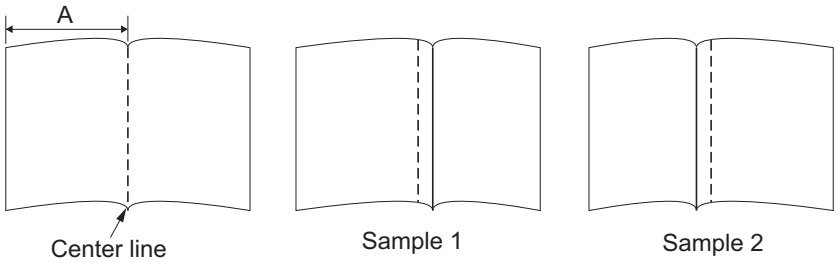

3 Press [Start] key to fix the setting.

Setting: Three Fold

1 Select [Three Fold].

2 Change the setting value by using [+] [-] keys or the numeric keys.

Content to adjust	Setting range	Initial setting	Data variation
Adjustment of tri- folding position	-15 to 15	0	0.32 mm

Increase the set value if the tri- folding position is shifted to the right side (sample 1).

Decrease the set value if the tri- folding position is shifted to the left side (sample 2).

Reference value A: 7.0 ± 2mm

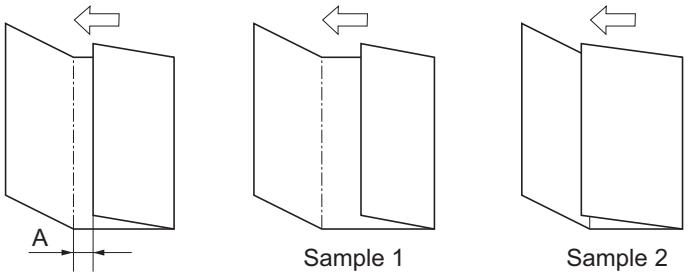

3 Press [Start] key to fix the setting.

Setting: Bundle Down

1 Select [Bundle Down]

2 Change the setting value by using [+] [-] keys or the numeric keys.

Content to adjust	Setting range	Initial setting	Data variation
Bundle down position adjust value	-15 to 15	0	0.32 mm

3 Press [Start] key to fix the setting.

Method: Inserter

1 Select the item to set.

Items	Contents
Loop Amount U	Upper deflection adjustment value
Loop Amount L	Lower deflection adjustment value
Loop Amount U(T)	Upper deflection adjustment value (Thick paper)
Loop Amount L(T)	Lower deflection adjustment value (Thick paper)

Setting: Loop Amount U

1 Select [Loop Amount U].

2 Change the setting value by using [+] [-] keys or the numeric keys.

Content to adjust	Setting range	Initial setting	Data variation
Adjust regist loop amount (Upper)	-15 to 15	0	0.33mm

3 Press [Start] key to fix the setting.

Setting: Loop Amount L

1 Select [Loop Amount L].

2 Change the setting value by using [+] [-] keys or the numeric keys.

Content to adjust	Setting range	Initial setting	Data variation
Adjust regist loop amount (Lower)	-15 to 15	0	0.33mm

3 Press [Start] key to fix the setting.

Setting: Loop Amount U(T)

1 Select [Loop Amount U(T)].

2 Change the setting value by using [+] [-] keys or the numeric keys.

Content to adjust	Setting range	Initial setting	Data variation
Adjust regist loop amount (Thick paper) (Upper)	-15 to 15	0	0.33mm

3 Press [Start] key to fix the setting.

Setting: Loop Amount L(T)

1 Select [Loop Amount L(T)].

2 Change the setting value by using [+] [-] keys or the numeric keys.

Content to adjust	Setting range	Initial setting	Data variation
Adjust regist loop amount (Thick paper) (Lower)	-15 to 15	0	0.33mm

3 Press [Start] key to fix the setting.

[Method: Z-Fold]

1 Select the item to set.

Items	Contents
Pos Adj	Z-Fold unit position adjustment
Pos Fine Adj	Z-Fold unit position fine adjustment
Regist	Z-Fold unit registration correction
Incr Fold	Z-Fold unit increase fold adjustment
Incr Speed	Z-Fold unit increase speed setting
Speed	Z-Fold unit output speed adjustment
Tray Full	Z-Fold unit folding machine tray detection setting
NV Adj Data	Re-writing of Z-Fold unit NV adjustment data

Setting: Pos Adj

1 Select the item to set.

2 Change the setting value by using [+] [-] keys or the numeric keys.

Items	Contents
Engineering Edge	Engineering fold edge adjustment
Bi	Bi fold position adjustment
Z Edge	Z fold edge position adjustment
Z Frame	Z fold outer frame position adjustment
Tri Edge	Tri fold edge position adjustment
Tri frame	Tri fold outer frame position adjustment

Setting: Engineering Edge

1 Select [Engineering Edge].

2 Change the setting value by using [+] [-] keys or the numeric keys.

Content to adjust	Setting range	Initial setting
A3	2 to 35	3
B4	2 to 17	3
A4R	2 to 17	3
Legal	2 to 17	3
LetterR	2 to 17	3
8K	2 to 17	3
Other	2 to 17	3

3 Press [Start] key to fix the setting.

Setting: Bi

1 Select [Bi].

2 Change the setting value by using [+] [-] keys or the numeric keys.

Content to adjust	Setting range	Initial setting
A3	-10 to 10	0
B4	-10 to 10	0
A4R	-10 to 10	0
Legal	-10 to 10	0
LetterR	-10 to 10	0
12X18	-10 to 10	0
B5	-10 to 10	0
SRA3	-10 to 10	0
A4E	-10 to 10	0
LetterE	-10 to 10	0
Other	-10 to 10	0

3 Press [Start] key to fix the setting.

Setting: Z Edge

1 Select [Z Edge].

2 Change the setting value by using [+] [-] keys or the numeric keys.

Content to adjust	Setting range	Initial setting
A3 Single (A3 single sheet folding)	2 to 10	4.5
B4 Single (B4 single sheet folding)	2 to 10	4.5
A4R Single (A4R single sheet folding)	2 to 10	4.5
Legal Single (Legal single sheet folding)	2 to 10	4.5
LetterR Single (LetterR single sheet folding)	2 to 10	4.5
Other Single (Other single sheet folding)	2 to 10	4.5
A4R Stack (A3R stack sheet folding)	2 to 10	4.5
LetterR Stack (LetterR stack sheet folding)	2 to 10	4.5
Other Stack (Other stack sheet folding)	2 to 10	4.5

3 Press [Start] key to fix the setting.

Setting: Z Frame

1 Select [Z Frame].

2 Change the setting value by using [+] [-] keys or the numeric keys.

Content to adjust	Setting range	Initial setting
A3 Single (A3 single sheet folding)	139 to 147	143
B4 Single (B4 single sheet folding)	120.3 to 128.3	124.3

Content to adjust	Setting range	Initial setting
A4R Single (A4R single sheet folding)	98 to 106	102
Legal Single (Legal single sheet folding)	117.5 to 125.5	121.5
LetterR Single (LetterR single sheet folding)	92 to 100	96
Other Single (Other single sheet folding)	-25 to 25	0
A4R Stack (A3R stack sheet folding)	98 to 106	102
LetterR Stack (LetterR stack sheet folding)	92 to 100	96
Other Stack (Other stack sheet folding)	89 to 165	124.5

3 Press [Start] key to fix the setting.

Setting: Tri Edge

1 Select [Tri Edge].

2 Change the setting value by using [+] [-] keys or the numeric keys.

Content to adjust	Setting range	Initial setting
A3 Single (A3 single sheet folding)	3 to 9	6
A4R Single (A4R single sheet folding)	3 to 9	6
Legal Single (Legal single sheet folding)	3 to 9	6
LetterR Single (LetterR single sheet folding)	3 to 9	6
Other Single (Other single sheet folding)	3 to 9	6
A4R Stack (A3R stack sheet folding)	3 to 9	6
LetterR Stack (LetterR stack sheet folding)	3 to 9	6
Other Stack (Other stack sheet folding)	3 to 9	6

3 Press [Start] key to fix the setting.

Setting: Tri Frame

1 Select [Tri Frame].

2 Change the setting value by using [+] [-] keys or the numeric keys.

Content to adjust	Setting range	Initial setting
A3 Single (A3 single sheet folding)	139 to 147	143
A4R Single (A4R single sheet folding)	98 to 106	102
Legal Single (Legal single sheet folding)	117.5 to 125.5	121.5
LetterR Single (LetterR single sheet folding)	92 to 100	96
Other Single (Other single sheet folding)	-25 to 25	0
A4R Stack (A3R stack sheet folding)	98 to 106	102
LetterR Stack (LetterR stack sheet folding)	92 to 100	96
Other Stack (Other stack sheet folding)	89 to 165.5	124.5

3 Press [Start] key to fix the setting.

Setting: Pos Fine Adj

1 Select the item to set.

2 Change the setting value by using [+] [-] keys or the numeric keys.

Items	Contents
Engineering Edge	Adjust the engineering fold edge position
Engineering Frame	Adjust the engineering fold outer frame position
Bi	Adjust the Bi fold position
Z Edge	Adjust the Z fold edge position
Z Frame	Adjust the Z fold outer frame position
Tri Edge	Adjust the Tri fold edge position
Tri frame	Adjust the Tri fold outer frame position

Setting: Engineering Edge/Engineering Frame

1 Select [Engineering Edge] or [Engineering Frame].

2 Change the setting value by using [+] [-] keys or the numeric keys.

Content to adjust	Setting range	Initial setting
A3	-4 to 4	0
B4	-4 to 4	0
A4R	-4 to 4	0
Legal	-4 to 4	0
LetterR	-4 to 4	0
8K	-4 to 4	0
Other	-4 to 4	0

3 Press [Start] key to fix the setting.

Setting: Bi

1 Select [Bi].

2 Change the setting value by using [+] [-] keys or the numeric keys.

Content to adjust	Setting range	Initial setting
A3	-10 to 10	0
B4	-10 to 10	0
A4R	-10 to 10	0
Legal	-10 to 10	0
LetterR	-10 to 10	0
12X18	-10 to 10	0
B5	-10 to 10	0

Content to adjust	Setting range	Initial setting
SRA3	-10 to 10	0
A4E	-10 to 10	0
LetterE	-10 to 10	0
Other	-10 to 10	0

3 Press [Start] key to fix the setting.

Setting: Z Edge

1 Select [Z Edge].

2 Change the setting value by using [+] [-] keys or the numeric keys.

Content to adjust	Setting range	Initial setting
A3 Single (A3 single sheet folding)	2 to 10	4.5
B4 Single (B4 single sheet folding)	2 to 10	4.5
A4R Single (A4R single sheet folding)	2 to 10	4.5
Legal Single (Legal single sheet folding)	2 to 10	4.5
LetterR Single (LetterR single sheet folding)	2 to 10	4.5
Other Single (Other single sheet folding)	2 to 10	4.5
A4R Stack (A3R stack sheet folding)	2 to 10	4.5
LetterR Stack (LetterR stack sheet folding)	2 to 10	4.5
Other Stack (Other stack sheet folding)	2 to 10	4.5

3 Press [Start] key to fix the setting.

Setting: Z Frame

1 Select [Z Frame].

2 Change the setting value by using [+] [-] keys or the numeric keys.

Content to adjust	Setting range	Initial setting
A3 Single (A3 single sheet folding)	139 to 147	143
B4 Single (B4 single sheet folding)	120.3 to 128.3	124.3
A4R Single (A4R single sheet folding)	98 to 106	102
Legal Single (Legal single sheet folding)	117.5 to 125.5	121.5
LetterR Single (LetterR single sheet folding)	92 to 100	96
Other Single (Other single sheet folding)	-25 to 25	0
A4R Stack (A3R stack sheet folding)	98 to 106	102
LetterR Stack (LetterR stack sheet folding)	92 to 100	96
Other Stack (Other stack sheet folding)	89 to 165	124.5

3 Press [Start] key to fix the setting.

Setting: Tri Edge

1 Select [Tri Edge].

2 Change the setting value by using [+] [-] keys or the numeric keys.

Content to adjust	Setting range	Initial setting
A3 Single (A3 single sheet folding)	3 to 9	6
A4R Single (A4R single sheet folding)	3 to 9	6
Legal Single (Legal single sheet folding)	3 to 9	6
LetterR Single (LetterR single sheet folding)	3 to 9	6
Other Single (Other single sheet folding)	3 to 9	6
A4R Stack (A3R stack sheet folding)	3 to 9	6
LetterR Stack (LetterR stack sheet folding)	3 to 9	6
Other Stack (Other stack sheet folding)	3 to 9	6

3 Press [Start] key to fix the setting.

Setting: Tri Frame

1 Select [Tri Frame].

2 Change the setting value by using [+] [-] keys or the numeric keys.

Content to adjust	Setting range	Initial setting
A3 Single (A3 single sheet folding)	139 to 147	143
A4R Single (A4R single sheet folding)	98 to 106	102
Legal Single (Legal single sheet folding)	117.5 to 125.5	121.5
LetterR Single (LetterR single sheet folding)	92 to 100	96
Other Single (Other single sheet folding)	-25 to 25	0
A4R Stack (A3R stack sheet folding)	98 to 106	102
LetterR Stack (LetterR stack sheet folding)	92 to 100	96
Other Stack (Other stack sheet folding)	89 to 165.5	124.5

3 Press [Start] key to fix the setting.

Setting: Regist

1 Select the item to set.

2 Change the setting value by using [+] [-] keys or the numeric keys.

Items	Contents
Regist Select	Select registration
Resist Adj Front	Adjust registration (Regist front)
Resist adj Stack	Adjust registration (Paper stack)
Reverse Adj Front	Adjust reverse rotation (Regist front)
Reverse Adj Stack	Adjust reverse rotation (Paper stack)

Setting: Resist Select

1 Select [Regist Select].

2 Change the setting value by using [+] [-] keys or the numeric keys.

Content to adjust	Setting range	Initial setting
Regist Front	0 to 1	0
Paper Stack	0 to 1	0

3 Press [Start] key to fix the setting.

Setting: Resist Adj Front

1 Select [Regist Adj Front].

2 Change the setting value by using [+] [-] keys or the numeric keys.

Content to adjust	Setting range	Initial setting
A3	-5 to 20	5
B4	-5 to 20	5
A4R	-5 to 20	5
Legal	-5 to 20	5
LetterR	-5 to 20	5
12X18	-5 to 20	5
8K	-5 to 20	5
B5	-5 to 20	5
SRA3	-5 to 20	5
A4E	-5 to 20	5
LetterE	-5 to 20	5
Other	-5 to 20	5

3 Press [Start] key to fix the setting.

Setting: Resist Adj Stack

1 Select [Regist Adj Stack].

2 Change the setting value by using [+] [-] keys or the numeric keys.

Content to adjust	Setting range	Initial setting
A4R	-5 to 20	5
LetterR	-5 to 20	5
Other	-5 to 20	5

3 Press [Start] key to fix the setting.

Setting: Reverse Adj Front

1 Select [Reverse Adj Front].

2 Change the setting value by using [+] [-] keys or the numeric keys.

Content to adjust	Setting range	Initial setting
A3	0.5 to 3.4	1.2
B4	0.5 to 3.4	1.2
A4R	0.5 to 3.4	1.2
Legal	0.5 to 3.4	1.2
LetterR	0.5 to 3.4	1.2
12X18	0.5 to 3.4	1.2
8K	0.5 to 3.4	1.2
B5	0.5 to 3.4	1.2
SRA3	0.5 to 3.4	1.2
A4E	0.5 to 3.4	1.2
LetterE	0.5 to 3.4	1.2
Other	0.5 to 3.4	1.2

3 Press [Start] key to fix the setting.

Setting: Reverse Adj Stack

1 Select [Reverse Adj Stack].

2 Change the setting value by using [+] [-] keys or the numeric keys.

Content to adjust	Setting range	Initial setting
A4R	0.5 to 3.4	1.2
LetterR	0.5 to 3.4	1.2
Other	0.5 to 3.4	1.2

3 Press [Start] key to fix the setting.

Setting: Incr Fold

1 Select [Incr Fold].

2 Change the setting value by using [+] [-] keys or the numeric keys.

Content to adjust	Setting range	Initial setting
Count Single (Adjusting no. of times when folding the single sheet)	0 to 4	1
Count Stack (Adjusting no. of times when folding the stack sheet)	0 to 6	3
Feed (Adjusting feed amount)	0 to 3	0

3 Press [Start] key to fix the setting.

Setting: Incr Speed

1 Select [Incr Speed].

2 Change the setting value by using [+] [-] keys or the numeric keys.

Content to adjust	Setting range	Initial setting
Incr Speed (Increase speed setting)	0 to 2	0

3 Press [Start] key to fix the setting.

Setting: Speed

1 Select the item to set.

2 Change the setting value by using [+] [-] keys or the numeric keys.

Items	Contents
Bi	Bi-Fold
Z	Z-Fold
Tri	Tri-Fold

Setting: Bi

1 Select [Regist Select].

2 Change the setting value by using [+] [-] keys or the numeric keys.

Content to adjust	Setting range	Initial setting
Single Small (Small size: 297.0mm or less)	-200 to 200	0
Single Large (Large size: 297.0 or more)	-200 to 200	0

3 Press [Start] key to fix the setting.

Setting: Z/Tri

1 Select [Regist Select].

2 Change the setting value by using [+] [-] keys or the numeric keys.

Content to adjust	Setting range	Initial setting
Single Small (Small size: 297.0mm or less)	-200 to 200	0
Single Large (Large size: 297.0 or more)	-200 to 200	0
Stack Small (Small size: 297.0mm or less)	-200 to 200	0
Stack Large (Large size: 297.0 or more)	-200 to 200	0

3 Press [Start] key to fix the setting.

Setting: Tray Full

1 Select [Tray Full].

2 Change the setting value by using [+] [-] keys or the numeric keys.

Content to adjust	Setting range	Initial setting
Folding machine tray full detection setting	0 to 1	0

3 Press [Start] key to fix the setting.

Setting: NV Adj Data

1 Select [NV Adj Data].

2 Change the setting value by using [+] [-] keys or the numeric keys.

* When replacing the PWB, input the setting value described in the bottom of the frame.

* NV = Non-Volatile memory

Content to adjust	Setting range	Initial setting
1st Fold (First folding position process adjustment)	-10 to 10	0
2nd Fold (Second folding position process adjustment)	-10 to 10	0
Incr Fold (Increase folding stop position process adjustment)	-10 to 10	0

3 Press [Start] key to fix the setting.

Completion

1 Press [Stop] key.

Return to the screen for selecting maintenance number.

U247 Paper feed operation check

(Message: Chk Paper Feeder)

Contents

Turn the motor and clutch power on for each feed unit.

Purpose

Execute to check motor and clutch operation of each feed unit.

Method

1 Press [Start] key.

2 Select the item to operate.

The screen for setting is displayed.

Items	Contents
2PF	Operates 2-tray paper feeder
LCF	Operate the large capacity feeder
Side Deck	Operate the side deck
2PF Switch	Operates 2-tray paper feeder SW
LCF Switch	Operate the large capacity feeder SW

Setting: 2PF

1 Select the item to set.

Display		Contents
Motor	Off	PF paper feed motor OFF
	On	PF paper feed motor ON
Clutch	C1 Clutch	PF paper feed clutch 1: ON
	C2 Clutch	PF paper feed clutch 2: ON
	Feed1 Clutch	PF conveying clutch 1: ON
	Feed2 Clutch	PF conveying clutch 2: ON
Execute		Starts operation

2 Select [Execute].

3 Press [Start] key. Starts the motor operation.

Press [Stop] key to quit operation.

Setting: LCF

1 Select the item to set.

Display		Contents
Motor	Off	PF paper feed motor OFF
	On	PF paper feed motor ON
Clutch	C1 Clutch	PF paper feed clutch 1: ON
	C2 Clutch	PF paper feed clutch 2: ON
	Feed1 Clutch	PF vertical conveying clutch 1: ON
	Feed2 Clutch	PF horizontal conveying clutch1 and 2: ON
Execute		Starts operation

2 Select [Execute].

3 Press [Start] key. Starts the motor operation.

Press [Stop] key to quit operation.

Setting: Side Deck

1 Select the item to set.

Display		Contents
Motor	Off	PF paper feed motor OFF
	On	PF paper feed motor ON
Clutch	C1 Clutch	PF paper feed clutch: ON
	Cassette1 Solenoid	PF paper feed solenoid: ON
Execute		Starts operation

2 Select [Execute].

3 Press [Start] key. Starts the motor operation.

Press [Stop] key to quit operation.

Setting: 2PF Switch

1 Select the item to set.

項目	内容
V Conv1	Vertical conveying 1 sensor
V Conv2	Vertical conveying 2 sensor

2 Select [Execute].

3 Press [Start] key. Starts the motor operation.

Press [Stop] key to quit operation.

Setting: LCF Switch

1 Select the item to set.

項目	内容
H Conv	Horizontal convey sensor
V Conv	Vertical convey sensor

2 Select [Execute].

3 Press [Start] key. Starts the motor operation.

Press [Stop] key to quit operation.

Completion

1 Press [Stop] key.

Return to the screen for selecting maintenance number.

U250 Set Maintenance Counter Pre-set

(Message: Mnt Cnt Pre-set)

Contents

Changes the pre-set values for the maintenance cycle and automatic gray-scale adjustment.

Purpose

Change the timing to display the message for maintenance and automatic gray-scale adjustment

Setting

1 Press [Start] key.

2 Select the item to set.

3 Change the setting value by using [+] [-] keys or the numeric keys.

Items	Contents	Setting range	Initial setting
M.Cnt A	Change the maintenance counter preset value (Kit A)	0 to 9999999	600000
M.Cnt B	Change the maintenance counter preset value (Kit B)	0 to 9999999	600000
M.Cnt HT	Change the maintenance counter preset value (HT adjustment)	0 to 9999999	0
Cass1	Change the maintenance counter preset value (Cassette 1)	0 to 9999999	300000
Cass2	Change the maintenance counter preset value (Cassette 2)	0 to 9999999	300000
Cass3 *1	Change the maintenance counter preset value (Cassette 3)	0 to 9999999	300000
Cass4 *1	Change the maintenance counter preset value (Cassette 4)	0 to 9999999	300000
Cass5 *2	Change the maintenance counter preset value (Cassette 5)	0 to 9999999	300000
Cass6 *2	Change the maintenance counter preset value (Cassette 6)	0～9999999	300000
Cass7 *3	Change the maintenance counter preset value (Cassette 7)	0～9999999	300000
MPT	Change the maintenance counter preset value (MPT)	0 to 9999999	150000
DP	Change the maintenance counter preset value (DP)	0 to 9999999	DP-7150/7160/7170: 300000
Inserter 1 *4	Change the maintenance counter preset value (Inserter 1)	0 to 9999999	500000
Inserter 2 *4	Change the maintenance counter preset value (Inserter 2)	0 to 9999999	500000
Z Fold *4	Change the maintenance counter preset value (Z hold unit)	0 to 9999999	720000

*1: 500-sheetx2 (PF-7140), *2: 1500-sheetx2 (PF-7150), *3: 3000-sheet side paper feeder (PF-7120), *4: 60/70ppm model only

4 Press [Start] key to fix the setting.

Completion

1 Press [Stop] key.

Return to the screen for selecting maintenance number.

U251 clearing the maintenance counter

(Message: Clr Mnt Cnt)

Contents

Display, clear or changes the maintenance count.

Purpose

Execute to check the maintenance count

Also, clear the count at the maintenance.

Setting

1 Press [Start] key.

2 Select the item to set.

3 Change the setting value by using [+] [-] keys or the numeric keys.

Items	Contents	Setting range
M.Cnt A	Maintenance cycle counter (Kit A)	0 to 9999999
M.Cnt HT	Maintenance cycle counter (HT adjustment)	0 to 9999999
Cass1	Maintenance cycle counter value (cassette 1)	0 to 9999999
Cass2	Maintenance cycle counter value (cassette 2)	0 to 9999999
Cass3 *1	Maintenance cycle counter value (cassette 3)	0 to 9999999
Cass4 *1	Maintenance cycle counter value (cassette 4)	0 to 9999999
Cass5 *2	Maintenance cycle counter value (cassette 5)	0 to 9999999
Clear	clear all the maintenance counts	-

*1: 500-sheetx2/1500-sheetx2 only, *2: 3000-sheet side paper feeder only

Clear

1 Select [Clear].

2 Press [Start] key to clear the setting value.

Completion

1 Press [Stop] key.

Return to the screen for selecting maintenance number.

U252 Destination

(Message: Set Dest)

Contents

Switch the operations and screens of the main unit according to the destination.

Purpose

Execute after initializing the backup RAM, in order to return the setting to the value before replacement or initialization

Method

1 Press [Start] key.

2 Select the item to set.

Items	Contents
Japan Metric *1	Japan metric
Inch *2	Inch
Europe Metric *2	Europe Metric
Asia Pacific *2	Asia Pacific
Australia *2	Australia
China *2	China
Korea *2	Korea

*1: 100 V model only, *2: Except 100 V model

Initial setting: Destination

3 Press [Start] key.

Initializes according to the destination

4 Turn the power switch off then on. Wait more than 5 seconds between the power off and on.

An error code is displayed when an error occurs.
When errors occur, turn the power switch off then on, and execute initialization using maintenance mode U252.

Error codes

Items	Contents
0001	Controller (Entity Error)
0002	Controller error
0020	Engine error
0040	Scanner error

U253 Switching the double/single counts

(Message: Set D/S Count)

Contents

Change the threshold of the single/double count

Purpose

Select, according to user's request (copy service provider), if the maximum size paper is to be counted as one sheet (single count) or two sheets (double count)

Setting

1 Press [Start] key.

Items	Contents
B/W	Switch the counter for B/W mode (Single/Double Count)

2 Select [SGL(All)] or [DBL(Folio)].

Items	Contents
SGL(All)	Set single count for all the paper sizes
DBL(A3/Ledger)	Set double count for Folio size or larger *2
DBL(B4)	Set single count for Legal(356mm) size or smaller
DBL(Folio)	Set double count for Folio size or larger *2

*2: The Folio length can be set to between 330 and 356 mm using maintenance mode U035. However, the double count will be applied when the set value is 330mm (Initial value) or longer.

Initial setting:DBL(A3/Ledger)

3 Press [Start] key to fix the setting.

Completion

1 Press [Stop] key.

Return to the screen for selecting maintenance number.

U260 Switching the timing for copy counting

(Message: Set Count Mode)

Contents

Switches the count timing for the total counter and other counters between paper feed and exit.

Purpose

Change the count timing according to the user's request

Setting

1 Press [Start] key.

2 Selects the copy count timing.

Items	Contents
Feed	When secondary paper feed starts.
Eject	Selects the paper exit timing

Initial setting: Eject

3 Press [Start] key to fix the setting.

Completion

1 Press [Stop] key.

Return to the screen for selecting maintenance number.

U265 Setting by destination

(Message: Set Model Dest)

Contents

Set the OEM code.

Purpose

Execute when replacing the main PWB, etc.

Setting

1 Press [Start] key.

2 Change the setting value by using [+] [-] keys or the numeric keys.

Items	Contents
No.	Display the OEM code

3 Press [Start] key to fix the setting.

4 Turn the power switch off then on. Wait more than 5 seconds between the power off and on.

Completion

1 Press [Stop] key.

Return to the screen for selecting maintenance number.

U271 Setting the page count unit

(Message: Set Page Count)

Contents

Execute the long paper count setting.

Purpose

Execute to change the long paper count.

> **NOTE**
> If double count is set in U253, the value multiplied with this is the long paper count.

Setting

1 Press [Start] key.

2 Select the item to set.

3 Change the setting value by using [+] [-] keys or the numeric keys.

Items	Contents	Setting range	Initial setting	Data variation
Banner A	Count setting of Long Paper A (470.1mm to 915mm/ 18.51” to 36”)	2 to 30	2	-
Banner B	Count setting of Long Paper B (915.1mm to 1220mm/ 36.01” to 48”)	2 to 30	3	-

4 Press [Start] key to fix the setting.

Completion

1 Press [Stop] key.

Return to the screen for selecting maintenance number.

U278 Delivery date setting

(Message: Set Delivery Date)

Contents

Registers the date of delivery of the machine.

Purpose

Execute when installing the machine. Execute to check the delivery date of the machine.

Method

1 Press [Start] key.

2 Select [Today].

3 Press [Start] key.

Set the delivery date of the machine.

Clearing

1 Select [Clear].

2 Press [Start] key.

clear the delivery date of the machine.

Completion

1 Press [Stop] key.

Return to the screen for selecting maintenance number.

U285 Set Service Status Page

(Message: Set Svc Sts Page)

Contents

Set the contents of Service status that is printed from system menu.

Purpose

Change the setting according to the user's request

Setting

1 Press [Start] key.

2 Select the item to set.

Items	Contents
Coverage	Set coverage information on Service status page
Rep Permit	Set permission of service report

Setting: Coverage

1 Select the item to set.

Items	Contents
On	Display the digital dot coverage.
Off	Not to display the digital dot coverage.

Initial setting: On

2 Press [Start] key. Set the setting value.

Setting: Rep Permit

1 Select the item to set.

Items	Contents
On	Enable output service report
Off	Disable output service report

Initial setting: Off

2 Press [Start] key. Set the setting value.

Completion

1 Press [Stop] key.

Return to the screen for selecting maintenance number.

U286 Optional language setting

(Message: Set Opt Language)

Description

Add/Delete/Change the optional language

Purpose

Set the optional languages selectable from System Menu

Setting

1 Press [Start] key.

2 Select the item to set.

Items	Contents
Opt Lang 1	Optional language 1 setting
Opt Lang 2	Optional language 2 setting
Opt Lang 3	Optional language 3 setting
Opt Lang 4	Optional language 4 setting
Opt Lang 5	Optional language 5 setting

Initial setting: 0 (None)

3 Press [Start] key. Set the setting value.

4 Turn the power switch off then on. Wait more than 5 seconds between the power off and on.

Setting

1 Press [Start] key.

2 Select the item to set.

Items	Contents
NONE	No optional language
ARABIC	Arabic language
BULGARIAN	Bulgarian language
CATALAN	Catalan language
CHINESE-S	Chinese language (Simplified)
CHINESE-T	Chinese language (Traditional)
CROATIAN	Croatian language
CZECH	Czech language
DANISH	Danish language
ESTONIAN	Estonian language
FINNISH	Finish language
GREEK	Greek language
HEBREW	Hebrew language
HUNGARIAN	Hungarian language
JAPANESE	Japanese language
KOREAN	Korean language
LATVIAN	Latvian language
LITHUANIA	Lithuanian language
NORWEGIAN	Norwegian language
POLISH	Polish language
PORTUGUESE	Portuguese language
ROMANIA	Romanian language
SLOVAK	Slovak language
SLOVENE	Slovenian language
SWEDISH	Swedish language
THAI	Thai language
TURKISH	Turkish language
VIETNAMESE	Vietnamese language

Display varies depending on installed optional language package.

3 Press [Start] key. Set the setting value.

Completion

1 Press [Stop] key.

Return to the screen for selecting maintenance number.

U287 Automatic recovery function

(Message: Set Reset Func)

Description

Set whether to enable the automatic recovery function after the service call error

Purpose

Set the automatic recovery function after the service call error or system error

Setting

1 Press [Start] key.

2 Select the item to set.

Items	Contents
C0XXX	Set whether to enable the automatic recovery function after the C0xxx code service call error
C1XXX	Set whether to enable the automatic recovery function after the C1xxx code service call error
C2XXX	Set whether to enable the automatic recovery function after the C2xxx code service call error
C3XXX	Set whether to enable the automatic recovery function after the C3xxx code service call error
C4XXX	Set whether to enable the automatic recovery function after the C4xxx code service call error
C5XXX	Set whether to enable the automatic recovery function after the C5xxx code service call error
C6XXX	Set whether to enable the automatic recovery function after the C6xxx code service call error
C7XXX	Set whether to enable the automatic recovery function after the C7xxx code service call error
C8XXX	Set whether to enable the automatic recovery function after the C8xxx code service call error
C9XXX	Set whether to enable the automatic recovery function after the C9xxx code service call error
CFXXX	Set whether to enable the automatic recovery function after the CF code system error

3 Press [Start] key. Set the setting value.

Completion

1 Press [Stop] key.

Return to the screen for selecting maintenance number.

U323 Abnormal temperature and humidity notification setting

(Message: Warning Heat Hum)

Contents

Set the notification of abnormal temperature and humidity.

Purpose

Change the setting according to the user's request

Setting

1 Press [Start] key.

2 Select the item to set.

Items	Contents
On	Indicate the abnormal temperature and humidity notification
Off	Do not indicate the abnormal temperature and humidity notification

Initial setting: On

3 Press [Start] key. Set the setting value.

Completion

1 Press [Stop] key.

Return to the screen for selecting maintenance number.

U325 Paper interval setting

(Message: Set Paper Int)

Contents

Set the print interval at high coverage.

Purpose

Changes the print interval at high coverage.

Setting

1 Press [Start] key.

2 Select the item to set.

3 Change the setting value by using [+] [-] keys or the numeric keys.

Items	Contents	Setting range	Initial setting
Interval	Set On/Off of print interval at high coverage.	On/Off	Off
Mode	Set the print interval mode at high coverage	1 to 10	1

4 Press [Start] key to fix the setting.

Completion

1 Press [Stop] key.

Return to the screen for selecting maintenance number.

U326 Black line cleaning indication

(Message: Set Clean Bk Line)

Contents

Set indication of the black lines cleaning guidance when detecting black lines.

Purpose

Display the cleaning guidance to reduce the service call with the black lines by dust on the contact glass when scanning from the document processor.

Method

1 Press [Start] key.

2 Select the item to set.

3 The screen for setting is displayed.

Items	Contents
Black Line Mode	Set On/Off of the black line cleaning guidance indication

4 Select the item to set.

Items	Contents
On	Indicate the black lines cleaning guidance
Off	Black line cleaning guidance is not indicated

Initial setting: On

5 Press [Start] key. Set the setting value.

Completion

1 Press [Stop] key.

Return to the screen for selecting maintenance number.

U327 Cassette heater control setting

(Message: Set Cass Heater)

Contents

Selects the cassette heater control setting.

Purpose

Selects the cassette heater control setting

Set the cassette heater for the optional cassette.

Method

1 Press [Start] key.

2 Select the item to set.

Items	Contents
Mode1	Set the cassette heater control Mode1.
Mode2	Set the cassette heater control Mode2.
Off	Set the cassette heater control Off (not installed).

Initial setting: Off

Once the cassette heater is installed and if the main unit is under the condition of Ready or Sleep, Mode1 & Mode2 control can be valid.

However, in case of the power of the main unit is off, the cassette heater is continued to be always on.

In case if the cassette heater setting is on, the drum refresh operation is shortened after recovering from the sleep mode.

However, if recovering by turning the power on, the drum refresh will be implemented same length as the case of cassette heater off condition.

In the drum heater setting is on, the drum refresh will not be implemented when recovering from the sleep mode.

Mode1: ON at 65%RH or more of the machine outside humidity (OFF: during drive), Mode2: always ON

3 Press [Start] key. Set the setting value.

Completion

1 Press [Stop] key.

Return to the screen for selecting maintenance number.

U332 Adjusting the black coverage coefficient

(Message: Adj Calc Rate)

Contents

Set the coefficient of custom size with A4/Letter size. The coefficient set here is used to convert the black ratio in relation to the A4/Letter size and to display the result in the service status page.

Purpose

Set the coefficient for converting the black ratio for custom sizes in relation to the A4/Letter size

Setting

1 Press [Start] key.

2 Select the item to set.

3 Change the setting value by using [+] [-] keys or the numeric keys.

Items	Contents	Setting range	Initial setting
Rate	Set the coefficient for converting the black ratio for custom sizes in relation to the A4/Letter size.	0.1 to 3.0	1.0

4 Press [Start] key to fix the setting.

Completion

1 Press [Stop] key.

Return to the screen for selecting maintenance number.

U339 Drum heater ON mode setting

(Message: Chk Drum Heater)

Description

Set the drum heater

Purpose

Set the drum heater setting display and drum heater setting in System Menu

Method

1 Press [Start] key.

2 Select the item to set.

3 The screen for setting is displayed.

Items	Contents
System	Set the drum heater setting display and drum heater setting in System Menu
Drum Heater	Set the drum heater
Mode	Drum heater operation mode

Setting: System

1 Select the item to set.

Items	Contents
On	Enabled
Off	Disabled

Initial setting: On

2 Press [Start] key. Set the setting value.

Drum Heater

1 Select the item to set.

Items	Contents
On	Enabled
Off	Disabled

Initial setting: Off

2 Press [Start] key. Set the setting value.

Setting: Mode

1 Select the item to set.

Items	Contents
Mode 0	Environmental correction mode
Mode 1	Blurred image prevention priority mode

Initial setting: Mode 0

2 Press [Start] key. Set the setting value.

Completion

1 Press [Stop] key.

Return to the screen for selecting maintenance number.

U340 Setting the applied mode

(Message: Set Applied Mode)

Description

Allocate memory to ensure that there is sufficient memory available for the printer to use as a working area.

Purpose

Modify the memory allocation if insufficient memory for transparency support or XPS direct printing occurs.

Method

1 Press [Start] key.

2 Select the item to set.

The screen for setting is displayed.

Items	Contents
Adj Memory	Set the memory allocation
Adj Max Job(Prn)	Setting the maximum of multiple jobs
Adj Max Job(Send)	Setting the maximum of multiple jobs

setting: Adj Memory

1 Change the setting value by using [+] [-] keys or the numeric keys.

Items	Contents	Setting range	Initial setting
Image	Area temporarily used to create output image.	-100 to 100(MB)	0

Set the values below in case print failure occurs with the memory shortage. (recommended value)
Image : +100

The work area for copy is small and it may cause output failure if the values are large.

2 Press [Start] key. Set the setting value.

3 Turn the power switch off then on. Wait more than 5 seconds between the power off and on.

Setting: Adj Max Job

1 Change the setting value by using [+] [-] keys or the numeric keys.

Items	Contents	Setting range	Initial setting
Copy	Maximum copy (Scan To Print) Jobs	10 to 50	10
Printer	Maximum printer (Host To Print) Jobs	10 to 50	50

The maximum [Printer] jobs should be maximum jobs.

2 Press [Start] key. Set the setting value.

Setting: Adj Max Job

1 Change the setting value by using [+] [-] keys or the numeric keys.

Items	Contents	Setting range	Initial setting
Send	Upper limit of Send (ScanToHost)	0 to 10	10
FAX	Upper limit of FAX job	0 to 210	210

The maximum [Printer] jobs should be maximum jobs.

2 Press [Start] key. Set the setting value.

Completion

1 Press [Stop] key.

Return to the screen for selecting maintenance number.

U341 Printer cassette setting

(Message: Set Prn Cass)

Contents

Set the cassette to printer output only.

Purpose

Execute it when securing a cassette for printer. The cassette set to on is for printer only and it cannot be used for copy.

- Cassette designated for FAX on system menu can not be set.

Setting

1 Press [Start] key.

2 Select the item to set.

3 Multiple cassettes are selectable.

Items	Contents
Cass1	Setting cassette 1 to the printer paper source
Cass2	Setting cassette 2 to the printer paper source
Cass3 *1	Setting cassette 3 to the printer paper source (paper feeder)
Cass4 *1	Setting cassette 4 to the printer paper source (paper feeder)
Cass5 *2	Setting cassette 5 to the printer paper source (paper feeder)

*1: 500-sheetx2/1500-sheetx2 only, *2: 3000-sheet side paper feeder only

Initial setting: Off (Cassette1 to 4)

4 Press [Start] key to fix the setting.

Completion

1 Press [Stop] key.

Return to the screen for selecting maintenance number.

U343 Duplex priority mode

(Message: Set Dup PriMode)

Contents

Switches between duplex or simplex copy for the initial copy mode.

Purpose

Set the frequently used settings depending on the user's usage.

Setting

1 Press [Start] key.

Select the item to set.

Items	Contents
On	Duplex print priority is enabled
Off	Duplex print priority is disabled

Initial setting: Off

2 Press [Start] key to fix the setting.

Completion

1 Press [Stop] key.

Return to the screen for selecting maintenance number.

U345 Setting the value for maintenance due indication

(Message: Set Mnt Time Disp)

Contents

Set when to display a message notifying that the time for maintenance is about to reach, by setting the number of prints that can be made before the current maintenance cycle reaches.

Display the maintenance precaution message when the page count reaches the set value before the maintenance count.

Purpose

Change the time for maintenance precaution display.

Setting

1 Press [Start] key.

2 Select the item to set.

3 Change the setting value by using [+] [-] keys or the numeric keys.

Items	Contents	Setting range	Initial setting
Cnt	Setting the maintenance time precaution display (Remaining number of prints that can be made before the current maintenance cycle reaches)	0 to 9999	0

4 Press [Start] key to fix the setting.

Completion

1 Press [Stop] key.

Return to the screen for selecting maintenance number.

U346 Selecting Sleep Mode

(Message: Slct Sleep Mode)

Contents

Changes the sleep mode settings.

Purpose

Changes the sleep mode settings.

Method

1 Press [Start] key.

2 Select the item to set.

The screen for setting is displayed.

Items	Contents
Timer/Sleep Level	BAM conformity country setting
Auto sleep	Switches AutoSleep function setting
Fuser Power Mode	Setting of fuser power source mode

Setting: Timer/Sleep Level

1 Select the item to set.

Items	Contents
More Energy Save	BAM conformity setting On Sleep mode is disabled (Quick Recovery setting is disabled)
Less Energy Save	BAM conformity setting Off Set Sleep Level (Quick Recovery or Energy Saver)

Initial setting: More Energy Save

2 Press [Start] key. Set the setting value.

3 Turn the power switch off then on. Wait more than 5 seconds between the power off and on.

Setting: Auto sleep

1 Select the item to set.

Items	Contents
On	Enable auto sleep function
Off	Disable auto sleep function

Initial setting: On

Sleep mode can not work from system menu if disable this function.

Peel off the energy saver label when setting it to off

2 Press [Start] key to fix the setting.

Setting: Fuser Power Mode

1 Select the item to set.

Items	Contents
Auto	In case that sleep timer setting is less than 10 min, the fuser gets off 1min. later from the job end. In case of longer than 10 min, the fuser does not get off even after the job end.
On	Fuser does not get off even after job end.
Off	Fuser gets off 1min later from job end.

Initial setting: Auto

2 Press [Start] key to fix the setting.

Completion

1 Press [Stop] key.

Return to the screen for selecting maintenance number.

U402 margin adjustment

(Message: Print Margin)

Contents

Adjusts the scan image margins.

Purpose

Make the adjustment if margins are incorrect

NOTE

If the leading edge margin is less than the specified value, it may cause jam at the fuser.
If there is no bottom margin, when continuously printing, it may cause an image smudge on the second page.

Adjustment

1 Press [Start] key.

2 Press [Test Print] key.

NOTE

Pressing [Test Print] allows you to adjust setting on the screen showed below.
(Feed cassette/Conveying speed/Duplex printing/Print Set/Output tray)

3 Press [Start] key and output test chart.

4 Press [Test Print] key.

5 Select the item to set.

Items	Contents	Setting range	Initial setting	Data variation
Lead	Adjusts the printer leading edge margin	0.0 to 10.0	4.0	0.1 mm
A Margin	Printer left margin	0.0 to 10.0	3.0	0.1 mm
C Margin	Printer right margin	0.0 to 10.0	3.0	0.1 mm
Trail	Printer trailing edge margin	0.0 to 10.0	3.9	0.1 mm

6 Change the setting value by using [+] [-] keys or the numeric keys.

When the setting value is increased, the margin widens, and it narrows when the setting value is decreased.

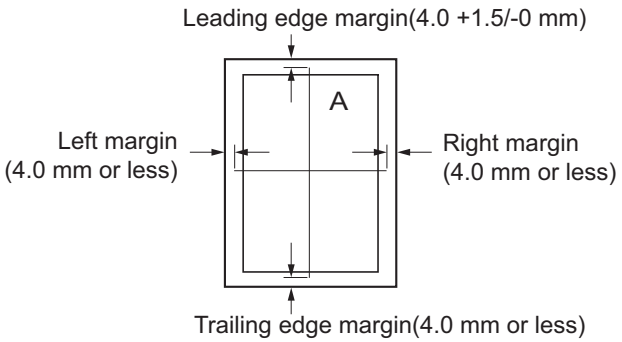

7 Press [Start] key to fix the setting.

IMPORTANT

Appropriate margins are not obtained after this adjustment, execute the following maintenance mode.
U034(49 page) > U402

Completion

1 Press [Stop] key.

Return to the screen for selecting maintenance number.

U403 Adjusting margins for scanning an original on the contact glass (Message: Scan Margin Tbl)

Contents

Adjusts the margins for the table scanning.

Purpose

Make the adjustment if margins are incorrect

Adjustment

1 Press [Start] key.

2 Press [Test Print] key.

NOTE

Pressing [Test Print] allows you to adjust setting on the screen showed below.
(Feed cassette/Conveying speed/Duplex printing/Print Set/Output tray)

3 Place an original and press [Start] key to make a test copy.

4 Press [Test Print] key.

5 Select the item to adjust.

Items	Contents	Setting range	Initial setting	Data variation
A Margin	Adjusts the scanner left margin	0.0 to 10.0	2.0	0.5mm
B Margin	Adjusts the scanner leading edge margin.	0.0 to 10.0	2.0	0.5mm
C Margin	Adjusts the scanner right margin	0.0 to 10.0	2.0	0.5mm
D Margin	Adjusts the scanner trailing edge margin	0.0 to 10.0	2.0	0.5mm

6 Change the setting value by using [+] [-] keys or the numeric keys.

Increasing the setting value makes the margin wider, and decreasing makes it narrow.

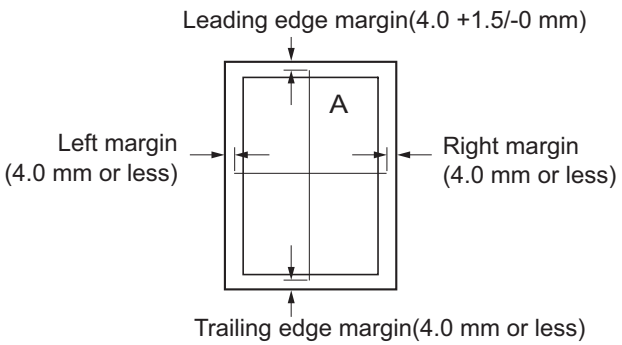

7 Press [Start] key to fix the setting.

IMPORTANT

Check the copy image after the adjustment. If the image is still incorrect, adjust the following in the maintenance mode.

U034(P.6-51) > U402(P.6-241) > U403

Completion

1 Press [Stop] key.

Return to the screen for selecting maintenance number.

U404 Adjusting margins for scanning an original from the document processor (Message: Scan Margin DP)

Contents

Adjust the margins for DP scanning.

Purpose

Make the adjustment if margins are incorrect

Adjustment

1 Press [Start] key.

2 Press [Test Print] key.

NOTE

Pressing [Test Print] allows you to adjust setting on the screen showed below.
(Feed cassette/Conveying speed/Duplex printing/Print Set/Output tray)

3 Place an original on the DP and press [Start] key to make a test copy.

4 Press [Test Print] key.

5 Select the item to adjust.

Items	Contents	Setting range	Initial setting	Data variation
A Margin	Adjusts the DP left margin	0.0 to 10.0	3.0	0.5mm
B Margin	Adjusts the DP leading edge margin	0.0 to 10.0	2.5	0.5mm
C Margin	Set the DP right margin	0.0 to 10.0	3.0	0.5mm
D Margin	Adjusts the DP trailing edge margin	0.0 to 10.0	4.0	0.5mm
A Margin(B) *1	Adjusts the DP left margin (2nd side)	0.0 to 10.0	3.0	0.5mm
B Margin(B) *1	Adjusts the DP leading edge margin (2nd side)	0.0 to 10.0	2.5	0.5mm
C Margin(B) *1	Adjusts the DP right margin (2nd side)	0.0 to 10.0	3.0	0.5mm
D Margin(B) *1	Adjusts the DP trailing edge margin (2nd side)	0.0 to 10.0	4.0	0.5mm

*1: Dual scan model only

6 Change the setting value by using [+] [-] keys or the numeric keys.

Increasing the setting value makes the margin wider, and decreasing makes it narrow.

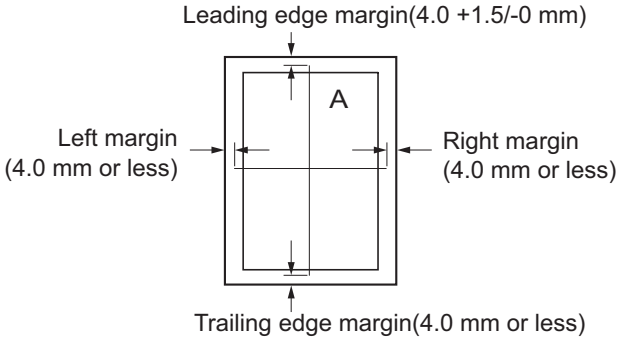

7 Press [Start] key to fix the setting.

IMPORTANT

Check the copy image after the adjustment. If the image is still incorrect, adjust the following in the maintenance mode.

U034(P.6-51) > U402(P.6-241) > U403(P.6-243) > U404

Completion

1 Press [Stop] key.

Return to the screen for selecting maintenance number.

U407 Adjusting the writing timing (Duplex/Reversal)

(Message: WR Timing(Rev))

Contents

Adjust write timing for copy with 180 rotation original.

Purpose

Adjusted when the back page image of duplex copying is printed in rotated 180 degrees from the scanner reading image (image on the memory)

IMPORTANT

Adjust this after finishing the following maintenance modes.

U034(P.6-51) > U402(P.6-241) > U066(P.6-73) >
U403(P.6-243) > U071(P.6-77) > U404(P.6-245) > U407

Adjustment

1 Press [Start] key.

2 Press [Test Print] key.

NOTE

Pressing [Test Print] allows you to adjust setting on the screen showed below.

(Feed cassette/Conveying speed/Duplex printing/Print Set/Output tray)

3 Place an original on the DP and press [Start] key to make a test copy.

4 Press [Test Print] key.

5 Select [Adj Data].

Items	Contents	Setting range	Initial setting	Data variation
Adj Data	Adjusts the leading edge timing when writing the image in the memory	-47 to 47	0	1dot

6 Change the setting value by using [+] [-] keys or the numeric keys.
Increase the value for the copy sample 1.
Decrease the value for the copy sample 2.

When the setting value is increased, the image moves forward, and it moves backward when the setting value is decreased.

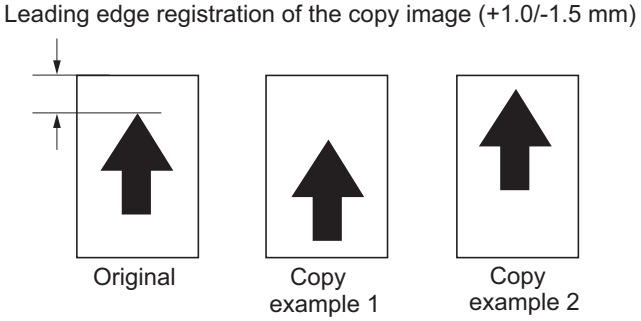

7 Press [Start] key to fix the setting.

Completion

1 Press [Stop] key.

Return to the screen for selecting maintenance number.

U410 Adjusting the halftone automatically

(Message: Adj Half Tone)

Contents

Acquires the data for the automatic halftone adjustment and ID correction.

Purpose

Execute when the quality of reproduced halftones has dropped

Adjustment

1 Input 410 with a numeric key.

2 Press [Start] key.

- Display the execution information screen.
- Test chart is output on the A4/Letter paper.

3 Place the test chart on to platen glass table with face down and arrow side far.

- Put approximately 20 sheets of white paper on to the chart.

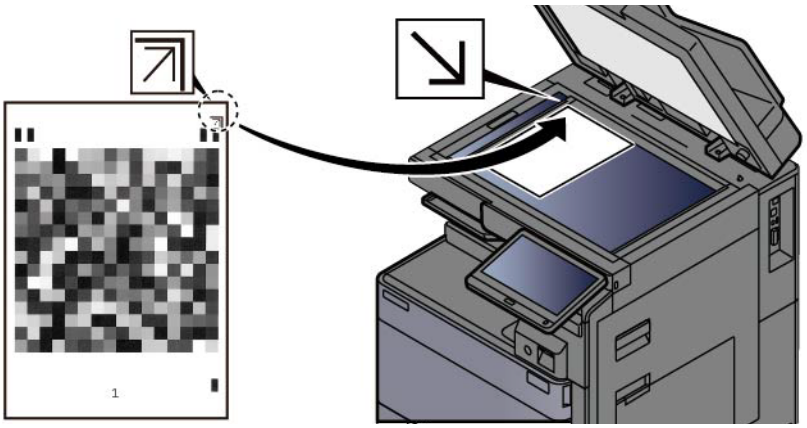

4 Press [Start] key.

- The auto adjustment is executed.

5 [Finish] appears after normal completion.

Error codes

Codes	Occurrence position	Contents	Re-adjustment
S001	Scanner	Original type error	Enable
S002		Original reference patch is not detected	Enable
S003		Original deviation is in excess in the sub-scanning direction	Enable
S004		Original deviation is in excess in the main scanning direction	Enable
S005		Original skew is in excess	Enable
S006		Other scanner error	Enable
E001	Engine	Engine status error	Disable
E002		SSW sensor error	Disable
E003		Engine is working	Enable
C101	Controller	Pause status	Disable
C102		Adjustment result error	Disable
C200		Table adjustment value error (K)	Disable
C300		Monotonic increase adjustment value error (K)	Disable

CAUTION

Note when replacing the main PWB;

When replacing the main PWB, even following the correct procedure of U410, if C102 error occurs, execute U410 > [Coefficient] > [Initialize] > press [Start] key. (Adjustment value will be initialized)

Method: Coefficient

1 Select [Coefficient].

2 Select the color to check.

- Display the adjustment data

Items	Contents
C	Display the Cyan adjustment data
M	Display the Magenta adjustment data
Y	Display the Yellow adjustment data
K	Display the Black adjustment data
Initialize	Initialize the adjustment data

Setting: Initialize

1 Select [Initialize].

2 Press [Start] key.

- The adjustment data is initialized

Completion

1 Press [Stop] key.

Return to the screen for selecting maintenance number.

U411 Scanner auto adjustment

(Message: Auto Adj Scn)

Contents

Uses the specified originals and automatically adjusts the following items in the scanner and the DP scanning sections.

Scanner section:Original size magnification, leading edge timing, center line, chromatic aberration in main/sub scanning direction, MTF correction, color/B/W input gamma, color correction matrix automatic adjustment

DP scanning section: Original size magnification, leading edge timing and center line, MTF correction, Input gamma, automatic adjustment of color correction matrix

Purpose

Automatically adjusts the scanner and the DP scanning sections.

Items	Use	Contents	Original for adjustment (P/N)
Table (Chart A)	In case of losing adjustment data, differing from the color tone extremely (not improve in case of executing U410) ISU(image sensor unit), Optical LED lamp, Engine EEPROM, when replacing DP CIS Use when setting up DP or executing U021 initialization	Execute automatic adjusts the table scanning. Magnification in the sub scanning direction / Leading edge timing Center line / chromatic aberration Sub scanning chromatic aberration / MTF correction gamma in color mode / color correction matrix Input gamma in B/W mode	7505000005 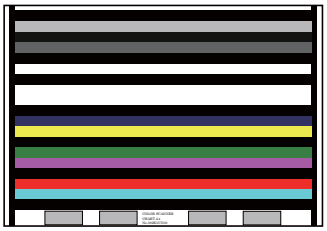
DP FU(ChartB)*1 DP FD(ChartB)*2	Use when setting up DP or executing U021 initialization	Execute the 1st side automatic adjustment in the DP scanning section. Execute the 2nd side automatic adjustment in the DP scanning section. Magnification in the sub-scanning direction Leading edge timing Center line Trailing edge timing	302AC68243 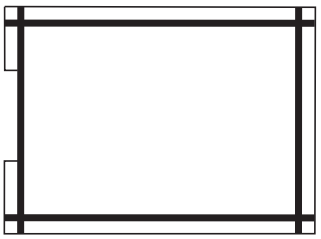
DP FU(ChartA)*1		Execute the 1st side automatic adjustment in the DP scanning section. Main scanning chromatic aberration / sub scanning chromatic aberration / MTF correction gamma in color mode / color correction matrix	7505000005
DP FD(ChartA)		Execute the 2nd side automatic adjustment in the DP scanning section. Main scanning chromatic aberration / sub scanning chromatic aberration / MTF correction gamma in color mode / color correction matrix	
Target		Set-up for obtaining the target value	7505000005

Items	Use	Contents	Original for adjustment (P/N)
DP Auto Adj *1		Adjusting the document processor scanning section with the chart output by the local machine Magnification in the sub-scanning direction Leading edge timing Center line	Without Chart B, executed in a simplified manner.
Debug	Debug mode	Execute when the USB device is installed	

*1: DP installed machine only, *2: Simultaneous duplex scanning DP machine only

Method: Table (Chart A)

Automatic input of the target value

Usually, it adjusts here.

1 Set the specified original (P/N: 7505000005) on the table.

2 Enter maintenance item U411.

3 Select [Target].

4 Select [Auto].

5 Press [Start] key.

6 Select [Table(ChartA)].

7 Press [Start] key to read the barcode of the original chart and to start the automatic adjustment.

8 When automatic adjustment has normally completed, [OK] is displayed.

NOTE

When the error code "1e" or "1f" is displayed during the automatic adjustment in the table scanning and the barcode is not read, adjust the following after manually inputting the target value.

Manual input of the target value

1 Enter the target values which are shown on the lower part of the front page of the adjustment original (P/N: 7505000005) by executing the maintenance mode U425.

2 Set the specified original (P/N: 7505000005) on the table.

3 Enter maintenance item U411.

4 Select [Target].

5 Select [U425].

6 Press [Start] key.

7 Select [Table(ChartA)].

8 Press [Start] key to start Auto adjustment.

9 When automatic adjustment has normally completed, [OK] is displayed.

NOTE

If the image position is shifted largely at the DP adjustment below, an error might occur when adjusting it with ChartA. First, use ChartB (image position) to adjust it and then use ChartA (color).

Method: DP FU (Chart B)

Adjusting the first side of the DP duplex scanning

1 Set the specified original (P/N: 302AC68243) face-up on the DP.

DP adjustment original (ChartB)

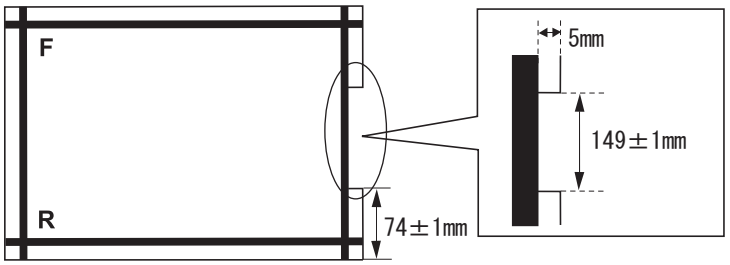

2 Enter maintenance item U411.

3 Select [DP FU(ChartB)].

4 Press [Start] key to start Auto adjustment.

5 When automatic adjustment has normally completed, [OK] is displayed.

Method: DP FD (Chart B)

Adjusting the second side of the DP duplex scanning

1 Set the specified original (P/N: 302AC68243) face-up on the DP.

2 Enter maintenance item U411.

3 Select [DP FD(ChartB)].

4 Press [Start] key to start Auto adjustment.

5 When automatic adjustment has normally completed, [OK] is displayed.

Method: DP Auto Adj

1 Set A4/Letter paper.

2 Press [Start] key to print the adjustment original.

3 Set the adjustment original output on the table and press [Start] key.

4 Set the output adjustment original with face-up on the DP.

5 Press [Start] key and scan the original.

6 Press [Start] key to start the 1st side automatic adjustment.

7 Set the output adjustment original with face-down on the DP.

8 Press [Start] key and scan the original.

9 Press [Start] key to start the 2nd side automatic adjustment.

Method: DP FU (Chart A)

Automatic input of the target value

1 Set the specified original (P/N: 7505000005) face-up on the DP.

2 Enter maintenance item U411.

3 Select [Target].

4 Select [Auto].

5 Press [Start] key.

6 Select [DP FU(ChartA)].

7 Press [Start] key to read the barcode of the original chart and to start the automatic adjustment.

8 When automatic adjustment has normally completed, [OK] is displayed.

NOTE

When the error code "1e" or "1f" is displayed during the automatic adjustment in the DP scanning and the barcode is not read, adjust the following after manually inputting the target value.

Manual input of the target value

1 Enter the target values which are shown on the lower part of the front page of the adjustment original (P/N: 7505000005) by executing the maintenance mode U425.

2 Set the specified original (P/N: 7505000005) face-up on the DP.

3 Enter maintenance item U411.

4 Select [Target].

5 Select [U425].

6 Press [Start] key.

7 Select [DP FU(ChartA)].

8 Press [Start] key to start Auto adjustment.

9 When automatic adjustment has normally completed, [OK] is displayed.

Method: DP FD (Chart A)

Automatic input of the target value

1 Set the specified original (P/N: 7505000005) face-up on the DP.

2 Enter maintenance item U411.

3 Select [Target].

4 Select [Auto].

5 Press [Start] key.

6 Select [DP FD(ChartA)].

7 Press [Start] key to read the barcode of the original chart and to start the automatic adjustment.

8 When automatic adjustment has normally completed, [OK] is displayed.

NOTE

When the error code "1e" or "1f" is displayed during the automatic adjustment in the DP scanning and the barcode is not read, adjust the following after manually inputting the target value.

Manual input of the target value

1 Enter the target values which are shown on the lower part of the front page of the adjustment original (P/N: 7505000005) by executing the maintenance mode U425.

2 Set the specified original (P/N: 7505000005) face-up on the DP.

3 Enter maintenance item U411.

4 Select [Target].

5 Select [U425].

6 Press [Start] key.

7 Select [DP FD(ChartA)].

8 Press [Start] key to start Auto adjustment.

9 When automatic adjustment has normally completed, [OK] is displayed.

NOTE

When automatic adjustment has normally completed, [OK] is displayed. If an error occurs during auto adjustment, error code "NGXX" is displayed and operation stops. In this case, check the error and execute the automatic adjustment again.

Error codes

Codes	Contents	Corrective action
00	Automatic adjustment success	-
01	Black band detection error (Table scanning leading edge skew in the sub-scanning direction)	Set the original correctly and execute the adjustment again. Check lighting of the lamp or replace it.
04	Black band is not detected (Table leading edge in the sub-scanning direction)	
05	Black band is not detected (Table far end in the main scanning direction)	
06	Black band is not detected (Table near end in the main scanning direction)	
07	Black band is not detected (Table trailing edge in the sub-scanning direction)	
08	Black band is not detected (DP far end in the main scanning direction)	Check the attachment position of DP. Check lighting of the lamp or replace it. Check the back and front of the adjustment original.
09	Black band is not detected (DP near end in the main scanning direction)	
0a	Black band is not detected (DP leading edge in the sub-scanning direction)	
0b	Black band is not detected (Original check of DP leading edge in the sub-scanning direction)	
0c	Black band is not detected (DP trailing edge in the sub-scanning direction)	
0d	White band is not detected (DP trailing edge in the sub-scanning direction)	
0e	DMA time out	Turn the power switch off then on, and execute again.
0f	Magnification error in the sub-scanning direction	Turn the power switch off then on, and execute again. Adjust manually. (U065 to U067, U070 to U072)
10	Leading edge error in the sub-scanning direction	
11	Trailing edge error in the sub-scanning direction	
12	DP skew error in the sub-scanning direction	
13	Maintenance request error	Turn the power switch off then on, and execute again.

Codes	Contents	Corrective action
14	Center line error in the main scanning direction	Turn the power off and on, and execute again. Adjust manually. (U065 to U067, U070 to U072)
15	DP skew error in the main scanning direction	
16	Magnification error in the main scanning direction	
17	Service call error	Turn the power off and on, and execute again.
18	DP paper jam error	Set the original correctly and execute again.
19	PWB replacement error	-
1a	Original error	Clean the contact glass and slit glass. Exchange the adjustment original.
1b	Input gamma adjustment original error	Set the original correctly and execute again.
1c	Matrix adjustment original error	
1d	Original for the white reference correction coefficient error	
1e	Lab value detection error	Check the following and execute again. Is the bar code dirty? Is the original position correct? Is the bar code position correct?
1f	Lab value comparison error	Check the following and execute again. Is the acquired bar code the same? Is the original position correct? Is the bar code position correct?
20	Input gamma correction coefficient error	Set the original correctly and execute again.
21	Color correction matrix coefficient error	
30	Chromatic aberration adjustment original error	
63	Completed to obtain the test RAW	-

Completion

1 Press [Stop] key.

The screen for selecting a maintenance item No. is displayed.

U412 Adjusting the uneven density

(Message: Adj Uneven Dens)

Contents

Scan the test chart image distribution directly from the scanner .

Purpose

Execute when it is necessary to improve the uneven density.

Method

1 Press [Start] key.

2 Select the item to set.

The screen for executing is displayed.

Items	Contents
Normal Mode	Normal Mode
On/Off Config	Uneven density correction On/Off setting

Method: Normal Mode

1 Press [Start] key.

Output the test patter with the initial light intensity setting.

2 Set the test chart 1 and place approximately 20 sheets of white paper on it.

3 Press [Start] key. Scanning starts.

4 Check the correction result. [Finish] appears after normal completion.

1st retrial

1 [Retry] appears unless normally completed.

2nd retrial

1 [Retry] appears unless normally completed.

An error code appears when an error occurs.

Error codes list

Display	Contents	Display	Contents
S001	Patch is not detected	E002	Background image error
S002	Original position shift in the main scanning direction	E003	Density error
S003	Original position shift in the sub-scanning direction	E004	Uneven density error
S004	Original skew error	E005	Calibration error
S005	Original type error	EFFF	Other engine error
SFFF	Other scanner error	C001	Controller error
E001	Engine status error	CFFF	Other controller error

Setting: On/Off Config

1 Select the item to set.

Items	Contents
On	Enable the uneven density correction
Off	Disable the uneven density correction

Initial setting: On

Automatically set to on after completing correction.

2 Press [Start] key to fix the setting.

IMPORTANT

In case of removing the LSU from the machine and install it in the other machine, execute U412: Config ON --> OFF --> Start to perform the initialization of the LSU (Display "Complete") before removing the LSU from the machine.

Completion

1 Press [Stop] key.

Return to the screen for selecting maintenance number.

U415 Adjusting the print position automatically

(Message: Auto Print Pos)

Description

Execute the automatic adjustment of the timing at the print engine

Adjusting the leading edge timing, center line and margins

Purpose

Used to make respective auto adjustments for the print engine.

Method

1 Set A3/Ledger paper.

Load A4/Letter when the upper cassette and the large capacity feeder is used.

2 Press [Start] key.

3 Select [Execute].

4 Press [Start] key.

A test chart is outputted.

5 Set the output Test chart as the original.

6 Press [Start] key.

Automatically perform adjustment from the top to bottom cassettes.

Even if the error code (such as C103 or C104) is appears, the test pattern will be output. Set its test pattern as the original.

7 [OK] is displayed when complete properly

An error code appears when there is an error.

Error codes list

Display	Contents
S001	Black band is not detected (main scanning direction far end)
S002	Black band is not detected (main scanning direction near end)
S003	Black band is not detected (auxiliary scanning direction leading edge)
S004	Black band is not detected (auxiliary scanning direction trailing edge)
S005	Auxiliary scanning direction skew error (1.5 mm or more)
S006	Main scanning direction skew error (1.5 mm or more)
S007	Original error (detection of reverse original paper)
S008	Original error (page mismatch)
SFFF	Other scanner error
C103	Adjustment value error (leading edge timing)
C104	Adjustment value error (center line)
CFFF	Other controller error

Completion

1 Press [Stop] key.

Return to the screen for selecting maintenance number.

U425 Set Target

(Message: Set Target)

Description

Enter the Lab values which are shown on the back page of the adjustment original (P/N: 7505000005).

Purpose

Enter data in order to correct for differences in originals during the automatic adjustment

Execution

1 Press [Start] key.

2 Select the item to set.

Items	Contents
ChartA	Setting the adjustment value of the table scanning
ChartB	Set the adjustment value of the DP scanning

Method: ChartA

1 Press [Start] key.

2 Select the item to set.

Items	Contents
White	Setting the white patch for the adjustment original
Black	Setting the black patch for the adjustment original
Gray1	Setting the Gray1 patch for the adjustment original
Gray2	Setting the Gray2 patch for the adjustment original
Gray3	Setting the Gray3 patch for the adjustment original
C	Setting the cyan patch for the adjustment original
M	Setting the magenta patch for the adjustment original
Y	Setting the yellow patch for the adjustment original
R	Setting the red patch for the adjustment original
G	Setting the green patch for the adjustment original
B	Setting the blue patch for the adjustment original
Adjust Original	Setting the main scanning and sub-scanning directions

Setting: White

1 Select the item to set.

2 By using [Left/Right cursor] keys or the numeric keys, enter the values which are shown on the back page of the adjustment original.

Items	Contents	Setting range	Initial setting	Data variation
L	L parameter setting	0.0 to 100	93.6	-
a	A value setting	-200 to 200	0.9	-
b	B value setting	-200 to 200	-0.4	-

3 Press [Start] key to fix the setting.

Setting: Black

1 Select the item to set.

2 By using [Left/Right cursor] keys or the numeric keys, enter the values which are shown on the back page of the adjustment original.

Items	Contents	Setting range	Initial setting	Data variation
L	L parameter setting	0.0 to 100	10.6	-
a	A value setting	-200 to 200	-0.2	-
b	B value setting	-200 to 200	-0.7	-

3 Press [Start] key to fix the setting.

Setting: Gray1

1 Select the item to set.

2 By using [Left/Right cursor] keys or the numeric keys, enter the values which are shown on the back page of the adjustment original.

Items	Contents	Setting range	Initial setting	Data variation
L	L parameter setting	0.0 to 100	76.2	-
a	A value setting	-200 to 200	-0.2	-
b	B value setting	-200 to 200	1.2	-

3 Press [Start] key to fix the setting.

Setting: Gray2

1 Select the item to set.

2 By using [Left/Right cursor] keys or the numeric keys, enter the values which are shown on the back page of the adjustment original.

Items	Contents	Setting range	Initial setting	Data variation
L	L parameter setting	0.0 to 100	25.2	-
a	A value setting	-200 to 200	-0.2	-
b	B value setting	-200 to 200	-0.2	-

3 Press [Start] key to fix the setting.

Setting: Gray3

1 Select the item to set.

2 By using [Left/Right cursor] keys or the numeric keys, enter the values which are shown on the back page of the adjustment original.

Items	Contents	Setting range	Initial setting	Data variation
L	L parameter setting	0.0 to 100	51.3	-
a	A value setting	-200 to 200	-0.3	-
b	B value setting	-200 to 200	0.3	-

3 Press [Start] key to fix the setting.

Setting: C

1 Select the item to set.

2 By using [Left/Right cursor] keys or the numeric keys, enter the values which are shown on the back page of the adjustment original.

Items	Contents	Setting range	Initial setting	Data variation
L	L parameter setting	0.0 to 100	72.6	-
a	A value setting	-200 to 200	-32.8	-
b	B value setting	-200 to 200	-11.5	-

3 Press [Start] key to fix the setting.

Setting: M

1 Select the item to set.

2 By using [Left/Right cursor] keys or the numeric keys, enter the values which are shown on the back page of the adjustment original.

Items	Contents	Setting range	Initial setting	Data variation
L	L parameter setting	0.0 to 100	48.1	-
a	A value setting	-200 to 200	69.9	-
b	B value setting	-200 to 200	-6.1	-

3 Press [Start] key to fix the setting.

Setting: Y

1 Select the item to set.

2 By using [Left/Right cursor] keys or the numeric keys, enter the values which are shown on the back page of the adjustment original.

Items	Contents	Setting range	Initial setting	Data variation
L	L parameter setting	0.0 to 100	86.2	-
a	A value setting	-200 to 200	-18.6	-
b	B value setting	-200 to 200	81.7	-

3 Press [Start] key to fix the setting.

Setting: R

1 Select the item to set.

2 By using [Left/Right cursor] keys or the numeric keys, enter the values which are shown on the back page of the adjustment original.

Items	Contents	Setting range	Initial setting	Data variation
L	L parameter setting	0.0 to 100	46.7	-
a	A value setting	-200 to 200	54.2	-
b	B value setting	-200 to 200	38.6	-

3 Press [Start] key to fix the setting.

Setting: G

1 Select the item to set.

2 By using [Left/Right cursor] keys or the numeric keys, enter the values which are shown on the back page of the adjustment original.

Items	Contents	Setting range	Initial setting	Data variation
L	L parameter setting	0.0 to 100	67.8	-
a	A value setting	-200 to 200	-51.3	-
b	B value setting	-200 to 200	48.9	-

3 Press [Start] key to fix the setting.

Setting: B

1 Select the item to set.

2 By using [Left/Right cursor] keys or the numeric keys, enter the values which are shown on the back page of the adjustment original.

Items	Contents	Setting range	Initial setting	Data variation
L	L parameter setting	0.0 to 100	38.8	-
a	A value setting	-200 to 200	25.3	-
b	B value setting	-200 to 200	-22.8	-

3 Press [Start] key to fix the setting.

Setting: Adjust Original

NOTE

This setting is usually unnecessary.

Items	Contents	Setting range	Initial setting	Data variation
Lead	Set the adjustment value of the leading edge.	4.0 to 6.0	5.0	0.1mm
Main Scan	Set the adjustment value of the left edge.	9.0 to 11.0	10.0	0.1mm
Sub Scan	Set the adjustment value of the trailing edge.	189.0 to 191.0	190.0	0.1mm

1 Measure the distances "A", "B" and "C" from the upper edge of black belt 1 to the lower edge of black belt 3 of the adjustment original.
Measurement procedure
1) Measure the distance "A", "B" and "C" between two points as follows. (A: 30mm from the left edge, B: 105mm from the left edge, C: 180mm from the left edge)
Measure the distance from the leading edge to the top edge of black belt 1.
2) Apply the following formula for the values obtained: ((A+B+C)/3)

2 Enter the value solved in "Lead" using the [+] [-] keys.

3 Press [Start] key to fix the setting.

4 Measure the distance "F" from the left edge to the right edge of black belt 2 on the adjustment original.
Measurement procedure
Measure the distance "F" from the left edge at 21mm from the top edge of black belt 1to the right edge of black belt 2.

5 Enter the values measured in "Main Scan" using the [+] [-] keys.

6 Press [Start] key to fix the setting.

7 Measure the distance "D" and "E" from the top edge of black belt 1 to the bottom edge of black belt 3 on the adjustment original at two positions.
Measurement procedure
1) Measure the distance "D" and "E" between two points as follows. (D: Measure the distance from the leading edge to the trailing edge of black belt 3 on the adjustment original at 30mm of the left edge and deduct A. E: Measure the distance from the leading edge to the trailing edge of black belt 3 on the adjustment original at 180mm of the left edge and deduct C.)
2) Apply the following formula for the values obtained: (D/2+E/2)

8 Enter the value solved in "Sub Scan" using the [+] [-] keys.

9 Press [Start] key to fix the setting.

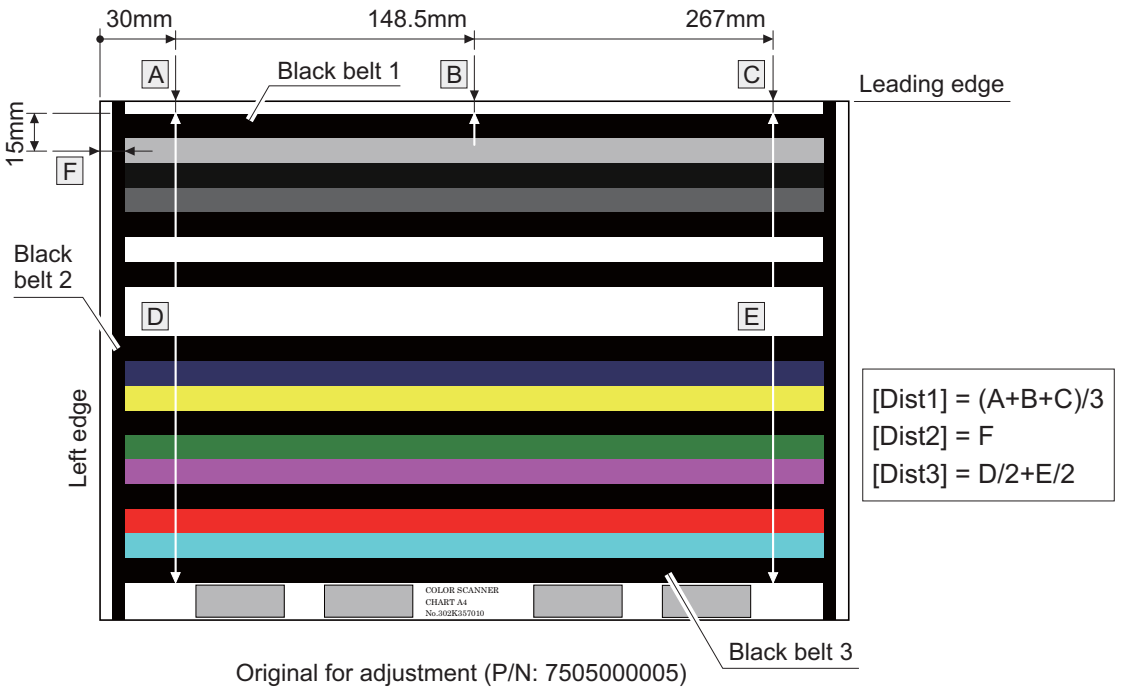

Original for adjustment (P/N: 7505000005)

Setting: DP(ChartB)

NOTE

This setting is usually unnecessary.

Items	Contents	Setting range	Initial setting	Data variation
Lead	Set the adjustment value of the leading edge.	14.0 to 16.0	15.0	0.1mm
Main Scan	Set the adjustment value of the left edge.	14.0 to 16.0	15.0	0.1mm
Sub Scan	Set the adjustment value of the trailing edge.	388.0 to 392.0	390.0	0.1mm

1 Measure the distance "A" from the leading edge to the black belt (inside) on the adjustment original.

2 Enter the value measured in "Lead" using the [+] [-] keys.

3 Measure the distance "B" from the left edge to the black belt (inside) on the adjustment original.

4 Enter the values measured in "Main Scan" using the [+] [-] keys.

5 Measure the distance "C" from the leading black belt (inside) to the trailing black belt (inside) on the adjustment original.

6 Enter the values measured in "Sub Scan" using the [+] [-] keys.

7 Press [Start] key to fix the setting.

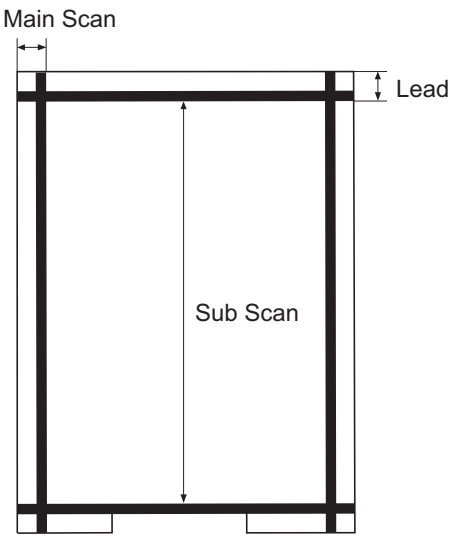

Original for adjustment Chart 2-2 (P/N: 302AC68243)

Completion

1 Press [Stop] key.

Return to the screen for selecting maintenance number.

U451 Set Charge Amount Estimation

(Message: Set Chg Amt Estim)

Contents

Perform execution setting of charge amount estimation and check the measured value at the time of execution.

Purpose

Perform execution setting of charge amount estimation and check the measured value at the time of execution.

Method

1 Press [Start] key.

2 Select the item to set.

The screen for setting is displayed.

Items	Contents
Permission	Enable/disable automatic execution of charge amount estimation
Charge Estimation	Manual execution of charge amount estimation
Toner Charge	Displays the latest charge amount estimation result for each color
Carrier Resist	Displays the most recent development carrier resistance estimation result for each color
Reflecting Result	Enable/disable setting of process control referring to charge amount estimation

Setting: Permission

1 Select the item to set.

Items	Contents
On	Enable settings
Off	Disable settings

Default value: On

2 Press [Start] key to set the setting value.

Setting: Charge Estimation

1 Select [Execute].

Items	Contents
Execute	Execute charge amount estimation

2 Press [Start] key and then, start the charge amount estimation.

Setting: Toner Charge

1 Select [K].

Items	Contents
K	Measurement value of charge amount estimation (K)

2 The present value is displayed.

Setting: Carrier Resist

1 Select [K].

Items	Contents
K	Measurement value of the developing carrier resistance (K)

2 The present value is displayed.

Setting: Reflecting Result

1 Select the item to set.

Items	Contents
On	Enable settings
Off	Disable settings

Default value: On

2 Press [Start] key to set the setting value.

Completion

1 Press [Stop] key.

Return to the screen for selecting maintenance number.

U460 Sensor adjustment

(Message: Adj Conveying)

Contents

Correct the threshold of multi feed sensor in DP

- DP-7130 installed

Purpose

In case that multi feed happen frequently, adjust the threshold in conditions.

Method

1 Press [Start] key.

2 Select the item to set.

The screen for setting is displayed.

Items	Contents
DP	Adjust/Set DP conveying sensor

Method: DP

1 Select the item to set.

Items	Contents
Conveying Sensor	Executing Calibration
Sensor Distance	Perform calibration between sensors

2 Press [Start] key to set the setting value.

Setting: Conveying Sensor

1 Select the item to set.

Items	Contents
Sensor(Non-P)*	Display sensor value without paper
Sensor*	Display sensor value with paper
Threshold(S)	Setting paper conveying threshold
Threshold(M)	Setting multi feed threshold
Execute	Executing Calibration

*: Display only for center

Setting: Threshold(S)/(M)

1 Select the item to set.

2 By using [+] [-] keys or the numeric keys, change the setting value.

Items	Contents	Setting range	Initial setting
Threshold(S)	Setting paper conveying threshold	0 to 255	0
Threshold(M)	Setting multi feed threshold	0 to 255	0

3 Press [Start] key to set the setting value.

Method: Execute

1 Select [Execute].

2 Press [Start] key.

AC calibration is started.

3 Press [Start] key to set the setting value.

Setting: Sensor Distance

1 Select the item to set.

Items	Contents
Execute	Perform calibration when replacing the DP double feed sensor or DP main PWB

Method: Execute

1 Select [Execute].

2 Press [Start] key.

Calibration is performed.

In case of the error, [NG] is displayed.

Once the error occurred, check the double feed detection sensor.

Completion

1 Press [Stop] key.

Return to the screen for selecting maintenance number.

U464 ID correction setting

(Message: Set ID Adj Mode)

Contents

Set permission/prohibition of the ID correction operation (calibration). Executes each setting of the calibration.

Purpose

Execute the calibration setting when an image failure occurs or depending on the user's request.

Execute Calibration when replacing the maintenance kit.

Method

1 Press [Start] key.

2 Select the item to set.

The screen for setting is displayed.

Items	Contents
Permission	Permit/Prohibit Calibration
Time Interval	Set the time interval to execute calibration after completing printing.
Mode	Executing Calibration
On/Sleep Out	Calibration operation setting (power-up/recovery from sleep mode)
AP/NE	Calibration operation setting (AP/NE)
Leaving Time	Setting the time to determine whether to execute calibration when recovering from Sleep mode
Timing	Setting the execution timing by drive time
Target Value	Setting the target sensor value for the toner bias calibration and light intensity calibration
Calib	Executing Calibration

Setting: Permission

1 Select [On] or [Off].

Items	Contents
On	1: Permitting Calibration
Off	0: Prohibiting Calibration

Initial setting: On

2 Press [Start] key to fix the setting.

Setting: Time Interval

- Setting the mode to Custom, following changes are reflected.

1 Change the setting value by using [+] [-] keys or the numeric keys.

Items	Contents	Setting range
Time(sec)	Calibration interval	0 to 9999

Setting is changeable in 10 count increments.

Setting value for each mode

Mode	70ppm	60ppm	50ppm	40ppm
Short	129	150	180	225
Normal	257	300	360	450
Long	514	600	720	900

Initial setting: Normal

2 Press [Start] key to fix the setting.

Setting: Mode

1 Select the item to set.

Items	Contents
Short	0: Executing the calibration: short
Normal	1: Executing the calibration: standard
Long	2: Executing the calibration: long
Custom	3: Executing the calibration: custom

Initial setting: Normal

2 Press [Start] key to fix the setting.

Setting: On/Sleep Out

1 Select [On] or [Off].

Items	Contents
On	1: Permitting Calibration
Off	0: Prohibiting Calibration

Initial setting: On

2 Press [Start] key to fix the setting.

Setting: AP/NE

1 Select [On] or [Off].

Items	Contents
On	1: Permitting Calibration
Off	0: Prohibiting Calibration

Initial setting: On

2 Press [Start] key to fix the setting.

Setting: Leaving Time

- Setting the mode to Custom, following changes are reflected.

1 By using [+] [-] keys change the setting value. Every 120 min (0, 120, 240, 360, 480)

Items	Contents	Setting range
Time(min)	Setting the sleep timer	0 to 480

2 Press [Start] key to fix the setting.

Setting value for each mode

Mode	70ppm	60ppm	50ppm	40ppm
Short	120	120	120	120
Normal	480	480	480	480
Long	480	480	480	480

Initial setting: Normal

Setting: Timing

- Setting the mode to Custom, following changes are reflected.

1 Change the setting value by using [+] [-] keys or the numeric keys.

Items	Contents	Setting range
Time(sec)	Setting continuous printing standard time	60 to 9999

Setting is changeable in 10 count increments.

Setting value for each mode

Mode	70ppm	60ppm	50ppm	40ppm
Short	257	300	360	450
Normal	514	600	720	900
Long	1028	1200	1440	1800

nitial setting value: Normal

However, if the printing ratio has changed significantly, it will force execution.

2 Press [Start] key to fix the setting.

Setting: Target Value

1 Select the item to set.

2 Change the setting value by using [+] [-] keys or the numeric keys.

Initial setting value

項目	70ppm	60ppm	50ppm	40ppm
Thickness(K)	137	<--	<--	<--
Gamma(K)	360	<--	<--	<--

3 Press [Start] key to fix the setting.

Method: Calib

1 Select [Execute].

2 Press [Start] key.

Calibration is started.

Items	Contents
Execute	Executes Full Calibration

Completion

1 Press [Stop] key.

Return to the screen for selecting maintenance number.

U465 ID correction data

(Message: ID Adj Data)

Contents

Refers to the ID correction data.

Purpose

Execute for data check.

Method

1 Press [Start] key.

2 Select the item to set.

The screen is switched.

Items	Contents
Laser Power	Display the Cyan light intensity control value.
Laser Power(En)	Display the exposure level
Laser Power(Drum)	Display the drum exposure level at half-life (Drum)
Laser Power(Max)	Display the maximum exposure level (Max)
Bias Calib	Sensor value for the bias calibration
T7 CTD	T7 control value
Stress	Primary transfer belt durability

Method: Laser Power

The current value is displayed.

Items	Contents
K	Display the Black light intensity control value.

Method: Laser Power(En)

The current value is displayed.

Items	Contents
K	Display the Black exposure level

Method: Laser Power(drum)

The current value is displayed.

Items	Contents
K	Display the drum exposure level at half-life (Black) (Drum)

Method: Laser Power(Max)

The current value is displayed.

Items	Contents
K	Display the Black maximum exposure level (Max)

Method: Bias Calib

The current value is displayed.

Items	Contents
K	Sensor value for the bias calibration (Black)

Method: T7 CTD

The current value is displayed.

Items	Contents
K	T7 control value (Black)

Method: Stress

The current value is displayed.

Items	Contents
Front	Primary transfer belt durability (Front)
Rear	Primary transfer belt durability (Rear)

Completion

1 Press [Stop] key.

Return to the screen for selecting maintenance number.

U469 Primary transfer unit initial setting

(Message: Init Trans Unit)

Contents

Set the operation of the transfer belt speed correction.

Purpose

Execute when the primary transfer unit or laser scanner unit is replaced.

Method

1 Press [Start] key.

Items	Contents
Belt Initialize	Executing the primary transfer belt speed correction

Method: Belt Initialize

1 Select [Execute].

2 Press [Start] key.

Primary transfer belt speed correction starts.

3 When adjustment has normally completed, [OK] is displayed.

An error code appears when there is an error.

Error codes list

Codes	Description
1	Main body cover open
2	toner empty
3	Waste toner over-filled
4	Detecting the service call error

Display: Result

1 Select [Result].

2 Press [Start] key.

The result is displayed.

Items	Contents
Base Spd Temp	Transfer belt temperature
Belt Spd Adj	Primary transfer belt speed adjustment value

Completion

1 Press [Stop] key.

Return to the screen for selecting maintenance number.

U470 Setting the JPEG compression rate

(Message: Adj JPEG Rate)

Contents

Set the JPEG compression rate by image mode.

Purpose

Change the setting depending on the image desired by the user. Lower the set value to reduce the image roughness by changing the compression rate in case of 200% or more of the enlarged copy . If the set value is reduced, compression is high and image quality is lowered. If the set value is increased, image quality is improved but processing speed is slower.

Method

1 Press [Start] key.

2 Select the item to set.

The screen for setting is displayed.

Items	Contents
Copy	Compression rate of the copy
Send	Compression rate of the Send
System	Compression rate of the temporary saving in the system
Print	Compression rate for printer

Method: Copy

1 Select the item to set.

The screen for setting is displayed.

Items	Contents
Photo	Compression rate of the photo mode
Text	Compression rate of the text mode

Setting: Photo

1 Select the item to set.

2 Change the setting value by using [+] [-] keys or the numeric keys.

Items	Contents	Setting range	Initial setting
Luminance	Compression rate of the brightness	1 to 10	10
Chrominance	Compression rate of the color difference	1 to 10	10

3 Press [Start] key to fix the setting.

Setting: Text

1 Select the item to set.

2 Change the setting value by using [+] [-] keys or the numeric keys.

Items	Contents	Setting range	Initial setting
Luminance	Compression rate of the brightness	1 to 10	10
Chrominance	Compression rate of the color difference	1 to 10	10

3 Press [Start] key to fix the setting.

Method: Send

1 Select the item to set.

The screen for setting is displayed.

Items	Contents
Photo	Compression rate of the photo mode
Text	Compression rate of the text mode
HC-PDF(File Size)	Set the compression rate for High compression PDF (compression priority).

Setting: Photo

1 Select the item to set.

2 Change the setting value by using [+] [-] keys or the numeric keys.

Items	Contents	Setting range	Initial setting
Y1	Compression rate of the brightness	1 to 100	30(%)
Y2	Compression rate of the brightness	1 to 100	40(%)
Y3	Compression rate of the brightness	1 to 100	51(%)
Y4	Compression rate of the brightness	1 to 100	70(%)
Y5	Compression rate of the brightness	1 to 100	90(%)
CbCr1	Compression rate of the color difference	1 to 100	30(%)
CbCr2	Compression rate of the color difference	1 to 100	40(%)
CbCr3	Compression rate of the color difference	1 to 100	51(%)
CbCr4	Compression rate of the color difference	1 to 100	70(%)
CbCr5	Compression rate of the color difference	1 to 100	90(%)

3 Press [Start] key to fix the setting.

Setting: Text

1 Select the item to set.

2 Change the setting value by using [+] [-] keys or the numeric keys.

Items	Contents	Setting range	Initial setting
Y1	Compression rate of the brightness	1 to 100	30(%)
Y2	Compression rate of the brightness	1 to 100	40(%)
Y3	Compression rate of the brightness	1 to 100	51(%)
Y4	Compression rate of the brightness	1 to 100	70(%)
Y5	Compression rate of the brightness	1 to 100	90(%)
CbCr1	Compression rate of the color difference	1 to 100	30(%)
CbCr2	Compression rate of the color difference	1 to 100	40(%)
CbCr3	Compression rate of the color difference	1 to 100	51(%)
CbCr4	Compression rate of the color difference	1 to 100	70(%)
CbCr5	Compression rate of the color difference	1 to 100	90(%)

3 Press [Start] key to fix the setting.

Setting: HC-PDF(File Size)

1 Select the item to set.

2 Change the setting value by using [+] [-] keys or the numeric keys.

Items	Contents	Setting range	Initial setting
Y1	Compression rate of the brightness	1 to 100	15(%)
Y2	Compression rate of the brightness	1 to 100	25(%)
Y3	Compression rate of the brightness	1 to 100	75(%)
CbCr1	Compression rate of the color difference	1 to 100	15(%)
CbCr2	Compression rate of the color difference	1 to 100	25(%)
CbCr3	Compression rate of the color difference	1 to 100	75(%)

3 Press [Start] key to fix the setting.

Setting: System

1 Select the item to set.

2 Change the setting value by using [+] [-] keys or the numeric keys.

Items	Contents	Setting range	Initial setting
Y	Compression rate of the brightness	1 to 100	90(%)
CbCr	Compression rate of the color difference	1 to 100	90(%)

3 Press [Start] key to fix the setting.

Setting: Print

1 Select the item to set.

2 Change the setting value by using [+] [-] keys or the numeric keys.

Items	Contents	Setting range	Initial setting
Luminance	Compression rate of the brightness	1 to 10	7(%)
Chrominance	Compression rate of the color difference	1 to 10	7(%)

3 Press [Start] key to fix the setting.

NOTE

Test copy is available by pressing [Test Print] key as interruption copy mode while this maintenance mode is running.

Pressing [Test Print] allows you to adjust setting on the screen showed below.

(Feed cassette/Conveying speed/Duplex printing/Print Set/Output tray)

Completion

1 Press [Stop] key.

Return to the screen for selecting maintenance number.

U474 Checking the LSU cleaning

(Message: Chk LSU Cleaning)

Contents

Execute the LSU cleaning by operating the LSI cleaning motor. Also, Set the cleaning operation interval and timing to enter the operation.

Method

1 Press [Start] key.

2 Select the item to execute.

Items	Contents
Execute	Executes the LSU cleaning operation.
Cycle	Set the LSU cleaning operation.

Method: Execute

1 Press [Start] key.

The LSU slit glass is cleaned.

Method: Cycle

1 Select the item to set.

Items	Contents	Setting range	Initial setting
Cnt	Set the LSU cleaning cycle.	0 to 5000	1000

Setting: Cnt

1 Change the setting value by using [+] [-] keys or the numeric keys.

Settable in 500-sheet increments

2 Press [Start] key to fix the setting.

Completion

1 Press [Stop] key.

Return to the screen for selecting maintenance number.

U485 Image process mode setting

(Message: Set Img Proc Mode)

Contents

Set the PDF image rotation method.

Purpose

Execute to change the PDF image rotation method.

Method: Mode

1 Select the item to set.

Items	Contents
PDF Rotation	Rotate the PDF image

2 Change the setting value by using [+] [-] keys or the numeric keys.

Setting	Contents
0	The image rotation is designated to the internal parameter
1	The image rotation is designated to the actual image
2	The image rotation is designated to the internal parameter (CTM rotation)

Initial setting: 0

3 Press [Start] key to fix the setting.

Completion

1 Press [Stop] key.

Return to the screen for selecting maintenance number.

U520 Remote Service Setting

(Message: Set Remote Svc)

Contents

Set the remote service

Purpose

Set remote service function

Method

1 Press [Start] key.

2 Select the item to set.

Items	Contents
On/Off Config	Changes to the remote service setting dialog

Setting: On/Off Config

1 Select the item to set.

Items	Contents
On	Enable remote service function
Off	Disable remote service function

Initial setting: Off

2 Press [Start] key to fix the setting.

Completion

1 Press [Stop] key.

Return to the screen for selecting maintenance number.

U600 Initialize: All Data

(Message: Init All Data)

Contents

Initializes software switches, and all data and image memory in the backup data on the FAX PWB according to the destination and OEM setting.

Initializes the file system and then initializes the communication record and the registered contents if the file system is checked and an error is detected there.

Purpose

Initialize the FAX PWB

Method

1 Press [Start] key.

2 The screen for entering the destination code and OEM code is displayed.

3 Select [Country Code] and enter a destination code using the numeric keys.

Refer to the following destination code list.

Items	Contents
Country Code	Set the country code
OEM Code	Set the OEM code
Execute	Executing data initialization

No need to change the default value of [OEM Code].

4 Select [Execute].

5 Press [Start] key to fix the setting.

Data initialization starts.
Press [Stop] key to cancel the data initialization.

The firmware version is displayed after the data initialization.
The firmware version of 3 types of application, boot and IPL is displayed.

When initialization is successful, "Completed" is displayed for one second.

Where an irregular value is input, when it initializes, the following errors are displayed.

Kind of error
Unknown Country (When Country Code is unknown)
Unknown OEM (When OEM Code is unknown)
Unknown Country (When both are unknown)

Country code table

County code	Destination	County code	Destination
000	Japan	181	North America *2
156	All Asia *1	181	South America *3
250	Russia *6	253	All Europe *4
254	Taiwan	009	Australia
097	Korea	126	New Zealand *5
038	China		

*1: Sales company for Singapore, India, Thailand and Hong Kong.

*2: Sales company for USA, Mexico and Canada.

*3: Sales company for Bolivia, Chile, Peru, Argentine and Brazil.

*4: Sales company for Italy, Germany, Spain, UK, Holland, Sweden, France, Austria, Switzerland, Belgium, Denmark, Finland, Portugal, Ireland, Norway, Turkey, Saudi Arabia and South Africa.

*5: In case of handling in New Zealand, the country code has to be set at sales company. The code is 126 for this handling.

*6: In case of Russia, due to changing the default setting (DTMF --> Dial pulse).

U601 Initialize: Keep data

(Message: Init Keep Data)

Contents

Initializes software switches other than the machine data on the FAX PWB according to the destination and OEM setting.

Purpose

Initialize the FAX PWB without changing the user registration data and the factory defaults

Method

1 Press [Start] key.

2 The screen for entering the destination code and OEM code is displayed.

3 Select [Country Code] and enter a destination code using the numeric keys.

Refer to the following destination code list.

Items	Contents
Country Code	Set the OEM code
OEM Code	Set the OEM code
Execute	Executing data initialization

No need to change the default value of [OEM Code].

4 Select [Execute].

5 Press [Start] key to fix the setting.

Data initialization starts.
Press [Stop] key to cancel the data initialization.

The firmware version is displayed after the data initialization.
The firmware version of 3 types of application, boot and IPL is displayed.

When initialization is successful, "Completed" is displayed for one second.

U603 User data 1

(Message: User Data 1)

Contents

Set the line type for FAX use

Purpose

Execute as required

Method

1 Press [Start] key.

2 Select [Line Type].

Items	Contents
Line Type	Line Type

3 Select the item to set.

Items	Contents
DTMF	DTMF
10PPS	10PPS
20PPS	20PPS

4 Press [Start] key to fix the setting.

[Completed] is displayed.

Completion

1 Press [Stop] key.

Return to the screen for selecting maintenance number.

U604 User data 2

(Message: User Data 2)

Contents

Set the number of rings for the automatic FAX/telephone switching for FAX use

Purpose

Adjust the number of rings to longer or shorter at the automatic FAX/telephone switching

Method

1 Press [Start] key.

2 Select [Rings(F/T)].

3 Change the setting value by using [+] [-] keys or the numeric keys.

Items	Contents	Setting range	Initial setting
Rings (F/T)	Number of fax/telephone rings	0 to 15	-

If the default is set to "0", the main unit will start FAX reception without any ringing.

4 Press [Start] key to fix the setting.

[Completed] is displayed.

Completion

5 Press [Stop] key.

Return to the screen for selecting maintenance number.

U605 Data clear

(Message: Clr Data)

Contents

Initializes data related to the fax transmission such as transmission history or various ID.

Purpose

Clear the communication history

Method

1 Press [Start] key.

2 Select [Comm Rec].

Items	Contents
Com Rec	Delete data of communication history and protocol list of displayed port

3 Press [Start] key.

When initialization is successful, "Completed" is displayed for one second.

Completion

1 Press [Stop] key.

Return to the screen for selecting maintenance number.

U610 System 1

(Message: System Setting 1)

Contents

Set the number of lines to be ignored when receiving a fax at 100% magnification and in the auto reduction mode.

Method

1 Press [Start] key.

2 Select the item to set.

Items	Contents
Cut Line: 100%	Set the number of lines to be ignored when receiving a fax at 100% magnification.
Cut Line: Auto	Number of lines to be ignored when receiving in the auto reduction mode.
Cut Line: A4	Set the number of lines to be ignored when receiving a fax (A4R/LetterR) in the auto reduction mode.

Setting: Cut Line 100%

Set the maximum number of lines to be ignored if the received data volume exceeds the recording capacity.

If the number of excess lines is below the setting, those lines are ignored. If it is over the setting, they are recorded on the next page.

1 Change the setting value by using [+] [-] keys or the numeric keys.

Contents	Setting range	Initial setting	Data variation
Set the number of lines to be ignored when receiving a fax at 100% magnification.	0 to 22	3	-

Increase the setting value if a blank second page is output in the full magnification reception. Decrease the value if there is dropout in received image.

2 Press [Start] key to fix the setting.

Setting: Cut Line: Auto

Set the maximum number of lines to be ignored if the received data volume exceeds the recording capacity.

If the number of excess lines is below the setting, those lines are ignored. If over the setting, the entire data on a page is further reduced so that it can be recorded on the same page.

1 Change the setting value by using [+] [-] keys or the numeric keys.

Contents	Setting range	Initial setting	Data variation
Number of lines to be ignored when receiving in the auto reduction mode.	0 to 22	0	-

Increase the setting value if a page received in the reduction mode is reduced too much with the trailing edge margin. Decrease the value if there is dropout in received image.

2 Press [Start] key to fix the setting.

Setting: Cut Line: A4

Set the maximum number of lines to be ignored if the received data volume exceeds the recording capacity when the data is recorded in the auto reduction mode onto A4R or LetterR paper.

If the number of excess lines is below the setting, those lines are ignored. If over the setting, the entire data on a page is further reduced so that it can be recorded on the same page.

1 Change the setting value by using [+] [-] keys or the numeric keys.

Contents	Setting range	Initial setting	Data variation
Number of lines to be ignored when receiving in the A4R auto reduction mode.	0 to 22	0	-

Increase the setting value if a page received in the reduction mode is reduced too much with the trailing edge margin. Decrease the value if there is dropout in received image.

2 Press [Start] key to fix the setting.

Completion

1 Press [Stop] key.

Return to the screen for selecting maintenance number.

U611 System 2

(Message: System Setting 2)

Contents

Set the number of adjustment lines for automatic reduction.

Purpose

Set the number of adjustment lines for automatic reduction.

Method

1 Press [Start] key.

2 Select the item to set.

Items	Contents
ADJ LINES	Set the number of adjustment lines for automatic reduction.
ADJ LINES(A4)	Number of adjustment lines for automatic reduction when A4 paper is set.
ADJ LINES(LT)	Number of adjustment lines for automatic reduction when letter size paper is set.

Setting: ADJ LINES

Set the number of adjustment lines for automatic reduction.

1 Change the setting value by using [+] [-] keys or the numeric keys.

Contents	Setting range	Initial setting	Data variation
Number of adjustment lines for automatic reduction.	0 to 22	7	-

2 Press [Start] key to fix the setting.

[Completed] is displayed.

Setting: ADJ LINES(A4)

Set the number of adjustment lines for automatic reduction.

1 Change the setting value by using [+] [-] keys or the numeric keys.

Contents	Setting range	Initial setting	Data variation
Number of adjustment lines for automatic reduction when A4 paper is set.	0 to 22	22	-

2 Press [Start] key to fix the setting.

[Completed] is displayed.

Setting: ADJ LINES(LT)

Set the number of adjustment lines for automatic reduction when letter size paper is set.

1 Change the setting value by using [+] [-] keys or the numeric keys.

Contents	Setting range	Initial setting	Data variation
Number of adjustment lines for automatic reduction when letter size paper is set.	0 to 22	26	-

2 Press [Start] key to fix the setting.

[Completed] is displayed.

Completion

1 Press [Stop] key.

Return to the screen for selecting maintenance number.

U612 System 3

(Message: System Setting 3)

Contents

Set the FAX operation and automatic printing of the protocol list.

Method

1 Press [Start] key.

2 Display the item to delete.

Items	Contents
Auto Reduct	Selects auto reduction in the sub-scanning direction
Protocol List	Set the automatic protocol list printing.

Setting: Auto Reduct

Set whether to receive a long document by automatically reducing it in the sub-scanning direction or at actual size.

1 Change display by pressing key.

Items	Contents
On	Auto reduction is executed if the received document is longer than the FAX paper.
Off	Auto reduction is not performed.

Initial setting: On

2 Press [Start] key to fix the setting.

[Completed] is displayed.

Setting: Protocol List

Set the automatic protocol list printing.

1 Change display by pressing key.

Items	Contents
Off	The protocol list is not printed out automatically.
Err	Automatically printed if a communication error occurs.
On	Automatically printed out after communication.

Initial setting: Off

2 Press [Start] key to fix the setting.

[Completed] is displayed.

Completion

1 Press [Stop] key.

Return to the screen for selecting maintenance number.

U615 System 6

(Message: System Setting 6)

Contents

Set the record width capacity and process if 11 inch width paper is set for the inch specification machine

Method

1 Press [Start] key.

2 Select the item to set.

The screen for setting is displayed.

Items	Contents
RX WIDTH FOR 11"	

Setting: RX WIDTH FOR 11"

1 Select the item to set.

Items	Contents
Ledger	Transmits the A3 width to the destination machine
B4	Transmits the B4 width to the destination machine

Initial setting: LEDGER

2 Press [Start] key to fix the setting.

Completion

1 Press [Stop] key.

Return to the screen for selecting maintenance number.

U620 FAX system

(Message: FAX System)

Contents

Set the signal detection method for remote switching.

Change the setting according to the type of telephone connected to the main unit.

Purpose

Set the remote switching conditions according to the user's telephone type, preference, etc.

Setting

1 Press [Start] key.

2 Select [Remote Mode] and press [Start] key.

Items	Contents
Remote Mode	Setting the remote switching mode

3 Select the item to set.

Items	Contents
One	Set the one-shot type detection
Cont	Set the continuous type detection

Initial setting: One

4 Press [Start] key to fix the setting.

Completion

1 Press [Stop] key.

Return to the screen for selecting maintenance number.

U625 Communication settings

(Message: Set Comm)

Contents

Set the auto redialing interval and the number of times of auto redialing.

Purpose

FAX transmission may not be available if redialing interval is short. If long, it takes much time to complete transmission. Changes the setting to prevent the above phenomenon.

Method

1 Press [Start] key.

2 Select the item to set.

Items	Contents
Interval	Set the auto redialing interval
Times	Set the number of times of auto redialing

Setting: Interval

1 Change the setting value by using [+] [-] keys or the numeric keys.

Contents	Setting range	Initial setting	Data variation
Set the redialing interval	1 to 9 (min)	3 (min)	-

2 Press [Start] key to fix the setting.

[Completed] is displayed.

Setting: Times

1 Change the setting value by using [+] [-] keys or the numeric keys.

Contents	Setting range	Initial setting	Data variation
Set the number of times of redialing	0 to 15 times	3 times	-

2 Press [Start] key to fix the setting.

[Completed] is displayed.

Completion

1 Press [Stop] key.

Return to the screen for selecting maintenance number.

U630 Communication control procedures 1

(Message: Comm Ctrl 1)

Contents

Set the FAX communication.

Purpose

Set the following to correspond to field claims

- Reducing the transmission time to improve the accuracy of reception when using a low quality line
- Improving the accuracy of communication during the international communication

Method

1 Press [Start] key.

2 Select the item to set.

The screen for setting is displayed.

Items	Contents
TX Speed	Set the communication starting speed.
RX Speed	Set the reception speed.
TX Echo	Set the waiting period to prevent echo problems at the sender.
RX Echo	Set the reception speed.

Setting: TX Speed

Set the transmission speed of the sender. When the destination unit has the V.34 capability, V.34 is selected for transmission regardless of this setting.

1 Select the communication speed.

Items	Contents
14400bps/V17	V.17 14400bps
9600bps/V29	V.29 9600bps
4800bps/V27ter	V.27ter 4800bps
2400bps/V27ter	V.27ter 2400bps

Initial setting: 14400bps/V17

2 Press [Start] key to fix the setting.

[Completed] is displayed.

Setting: RX Speed

Set the reception capacity to advise the transmitter by the DIS/NSF signal. When the destination unit has the V.34 capability, V.34 is selected for transmission regardless of this setting.

1 Select the reception speed.

Items	Contents
14400bps	V.17, V.33, V.29, V.27ter
9600bps	V.29, V.27ter
4800bps	V.27ter
2400bps	V.27ter (fallback only)

Initial setting: 14400bps

2 Press [Start] key to fix the setting.

[Completed] is displayed.

Setting: TX Echo

Set the time to send the DCS signal after the DIS signal is received. Execute when an error occurs with echo at the transmitter side.

1 Select the item to set.

Items	Contents
500	Sends the DCS 500 ms after receiving a DIS.
300	Sends the DCS 300 ms after receiving a DIS.

Initial setting: 300

2 Press [Start] key to fix the setting.

[Completed] is displayed.

Setting: RX Echo

Set the time to send the NSF, CSI or DIS signal after the CED signal is received. Execute when an error occurs with echo at the receiver side.

1 Select the item to set.

Items	Contents
500	Sends the NSF, CSI or DIS 500ms after receiving the CED.
75	Sends the NSF, CSI or DIS 75ms after receiving the CED.

Initial setting: 75

2 Press [Start] key to fix the setting.

[Completed] is displayed.

Completion

1 Press [Stop] key.

Return to the screen for selecting maintenance number.

U631 Communication control procedures 2

(Message: Comm Ctrl 2)

Contents

Set the FAX communication.

Purpose

Set the transmission and reception of ECM

Set the CED frequency

Method

1 Press [Start] key.

2 Select the item to set.

The screen for setting is displayed.

Items	Contents
ECM TX	Set ECM transmission.
ECM RX	Set ECM reception.
CED Freq	The frequency of CED is set up.

Setting: ECM TX

Set to OFF when the reduction of transmission costs is of higher priority than image quality.

NOTE

Do not set it to OFF when connecting to the IP (Internet Protocol) telephone line.

1 Select the item to set.

Items	Contents
On	ECM transmission is enabled.
Off	ECM transmission is disabled.

Initial setting: On

1 Press [Start] key. Set the setting value.

Completed is displayed.

Setting: ECM RX

Set to OFF when the reduction of transmission costs is of higher priority than image quality.

NOTE

Do not set it to OFF when connecting to the IP (Internet Protocol) telephone line.

1 Select the item to set.

Items	Contents
On	ECM reception is enabled.
Off	ECM reception is disabled.

Initial setting: On

2 Press [Start] key to fix the setting.

[Completed] is displayed.

Setting: CED Freq

Set the CED frequency. Execute it as one of the communication accuracy improvement measures for the international communication.

1 Select the item to set.

Items	Contents
2100	2100Hz
1100	1100Hz

Initial setting: 2100

2 Press [Start] key to fix the setting.

[Completed] is displayed.

Completion

1 Press [Stop] key.

Return to the screen for selecting maintenance number.

U632 Communication control procedures 3

(Message: Comm Ctrl 3)

Contents

Set the FAX communication.

Purpose

Reducing the error communication when using a low quality line

Corresponds to field claims when automatic FAX/telephone switching

Method

1 Press [Start] key.

2 Select the item to set.

The screen for setting is displayed.

Items	Contents
DIS 4Byte	Set the DIS signal to 4 bytes.
Num OF CNG(F/T)	Set the number of the CNG detection in the automatic FAX/telephone switching mode.

Setting: DIS 4Byte

Set whether to send bit 33 and later bits of the DIS/DTC signal.

1 Select the item to set.

Items	Contents
On	Bit 33 and later bits of the DIS/DTC signal are not sent.
Off	Bit 33 and later bits of the DIS/DTC signal are sent.

Initial setting: Off

2 Press [Start] key to fix the setting.

[Completed] is displayed.

Setting: Num OF CNG(F/T)

Set the CNG detection times in the automatic FAX/telephone switching mode.

1 Select the item to set.

Items	Contents
1Time	Detects CNG once.
2Time	Detects CNG twice.

Initial setting: 1Time (100V model)/2Time (Others)

2 Press [Start] key to fix the setting.

[Completed] is displayed.

Completion

1 Press [Stop] key.

Return to the screen for selecting maintenance number.

U633 Communication control procedures 4

(Message: Comm Ctrl 4)

Contents

Set the FAX communication.

Purpose

Reducing the error communication when using a low quality line

Method

1 Press [Start] key.

2 Select the item to set.

The screen for setting is displayed.

Items	Contents
V.34	Enables or disables the V.34 communication.
V.34-3429Hz	Set the V.34 symbol speed (3429 Hz).
DIS 2Res	Set the number of times of DIS signal reception.
RTN Check	Set the reference for the RTN signal output.

Setting: V.34

Set whether to enable/disable the V.34 communication individually for transmission and reception.

1 Select the item to set.

Items	Contents
On	V.34 communication is enabled for both transmission and reception.
TX	V.34 communication is enabled for transmission only.
RX	V.34 communication is enabled for reception only.
Off	V.34 communication is disabled for both transmission and reception.

Initial setting: On

2 Press [Start] key to fix the setting.

[Completed] is displayed.

Setting: V.34-3429Hz

Set if the V.34 symbol speed 3429 Hz is used.

1 Select the item to set.

Items	Contents
On	V.34 symbol speed 3429 Hz is used.
Off	V.34 symbol speed 3429 Hz is not used.

Initial setting: On

2 Press [Start] key to fix the setting.

[Completed] is displayed.

Setting: DIS 2Res

Set the number of times to receive the DIS signal to once or twice. Execute it as one of the corrective measures for transmission errors and other problems.

1 Select the item to set.

Items	Contents
Once	Responds to the first signal.
Twice	Responds to the second signal.

Initial setting: Once

1 Press [Start] key to fix the setting.

[Completed] is displayed.

Setting: RTN Check

Set the error line rate to be a reference to the RTN signal transmission. If transmission errors occur frequently due to the line quality, lower this setting to reduce them.

1 Select the item to set.

Items	Contents
5%	Error line rate of 5%
10%	Error line rate of 10%
15%	Error line rate of 15%
20%	Error line rate of 20%

Initial setting: 15%

2 Press [Start] key to fix the setting.

[Completed] is displayed.

Completion

1 Press [Stop] key.

Return to the screen for selecting maintenance number.

U634 Communication control procedures 5

(Message: Comm Ctrl 5)

Contents

Set the maximum number of error bytes judged acceptable when receiving a TCF signal. Execute it as one of measures to ease transmission conditions if transmission errors occur.

Purpose

Relax the communication conditions

Setting

1 Press [Start] key.

2 Select [TCF Check].

3 Change the setting value by using [+] [-] keys or the numeric keys.

Items	Contents	Setting range	Initial setting
TCF Check	Set the allowed error bytes when detecting the TCF signal	1 to 255	0

4 Press [Start] key to fix the setting.

[Completed] is displayed.

Completion

1 Press [Stop] key.

Return to the screen for selecting maintenance number.

U640 Communication time setting 1

(Message: Comm Time 1)

Contents

Set the detection time when one-shot detection is selected for remote switching.

Set the detection time when continuous detection is selected for remote switching.

Purpose

Set the remote switching conditions according to the user's telephone type, preference, etc.

Method

1 Press [Start] key.

2 Select the item to set.

3 Change the setting value by using [+] [-] keys or the numeric keys.

Items	Contents	Setting range	Initial setting
Time(One)	Set the one-shot detection time for remote switching.	0 to 255	7 1 (New Zealand)
Time(Cont)	Set the continuous detection time for remote switching.	0 to 255	80

4 Press [Start] key to fix the setting.

[Completed] is displayed.

Completion

1 Press [Stop] key.

Return to the screen for selecting maintenance number.

U641 Communication time setting 2

(Message: Comm Time 2)

Contents

Set the time-out time for the fax communication.

Purpose

Mainly, executed to improve the accuracy of communication for international communication

Method

1 Press [Start] key.

2 Select the item to set.

Items	Contents
T0 TIME OUT	Set the T0 time-out time.
T1 TIME OUT	Set the T1 time-out time.
T2 TIME OUT	Set the T2 time-out time.
Ta TIME OUT	Set the Ta time-out time.
Tb1 TIME OUT	Set the Tb1 time-out time.
Tb2 TIME OUT	Set the Tb2 time-out time.
Tc TIME OUT	Set the Tc time-out time.
Td TIME OUT	Set the Td time-out time.

Setting: T0 Time Out

Set the time before detecting a CED or DIS signal after a dialing signal is sent.

Set to prevent disconnection of a line that occurs depending on the quality of the exchange, or when the destination unit Set the auto switching function.

1 Change the setting value by using [+] [-] keys or the numeric keys.

Contents	Setting range	Initial setting
Set the T0 time-out time.	30 to 90 (s)	56

2 Press [Start] key to fix the setting.

[Completed] is displayed.

Setting: T1 Time Out

Set the time before receiving the correct signal after call reception.

This setting is usually unnecessary.

1 Change the setting value by using [+] [-] keys or the numeric keys.

Contents	Setting range	Initial setting
Set the T1 time-out time.	30 to 90 (s)	36

2 Press [Start] key to fix the setting.

[Completed] is displayed.

Setting: T2 Time Out

The T2 time-out time is specified as follows.

- From CFR signal output to image data reception
- From image data reception to the next signal reception
- In ECM, from RNR signal detection to the next signal reception

1 Change the setting value by using [+] [-] keys or the numeric keys.

Contents	Setting range	Initial setting
Set the T2 time-out time.	1 to 255	69

2 Press [Start] key to fix the setting.

[Completed] is displayed.

Setting: Ta Time Out

Set the time to start ringing for an operator through the external telephone after receiving a call in the FAX/telephone automatic switching mode. (See page). If either receiving a FAX signal within this time or passing this time, the mode automatically switches to the FAX reception mode. Execute when a reception error occurs when in the automatic FAX/telephone switching.

1 Change the setting value by using [+] [-] keys or the numeric keys.

Contents	Setting range	Initial setting
Set the Ta time-out time.	1 to 255 s	30

2 Press [Start] key to fix the setting.

[Completed] is displayed.

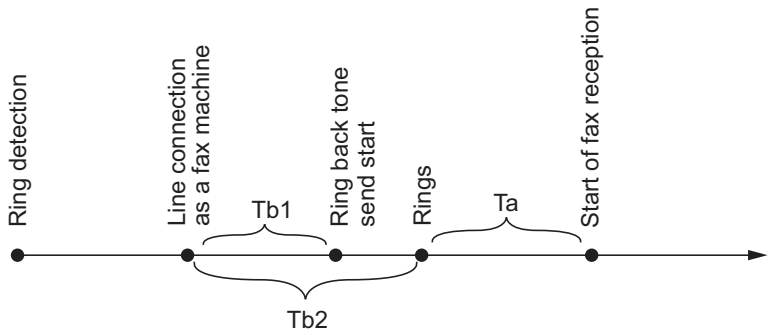

Setting: Tb1 Time Out

Set the time to start sending the ring back tone after receiving a call as a fax machine in the FAX/telephone automatic switching mode, (See page). Execute when a reception error occurs when in the automatic FAX/telephone switching.

1 Change the setting value by using [+] [-] keys or the numeric keys.

Contents	Setting range	Initial setting
Set the Tb1 time-out time.	1 to 255	20

2 Press [Start] key to fix the setting.

[Completed] is displayed.

Setting: Tb2 Time Out

Set the time to start ringing for an operator through the external telephone after receiving a call in the FAX/telephone automatic switching mode. (See page). Execute when a reception error occurs when in the automatic FAX/telephone switching.

1 Change the setting value by using [+] [-] keys or the numeric keys.

Contents	Setting range	Initial setting
Set the Tb2 time-out time.	1 to 255	80

2 Press [Start] key to fix the setting.

[Completed] is displayed.

Setting: Tc Time Out

In the TAD mode, set the time to check if there are any triggers for shifting to FAX reception after a connected handset receives a call. Unless switched to FAX reception during this period, operated as a normal phone after this.

In the TAD mode, change the setting when fax reception is unsuccessful or a telephone fails to receive a call.

1 Change the setting value by using [+] [-] keys or the numeric keys.

Contents	Setting range	Initial setting
Set the Tc time-out time.	1 to 255 s	60

2 Press [Start] key to fix the setting.

[Completed] is displayed.

Setting: Td Time Out

Set the length of time to determine silent status, one of the triggers for Tc time check.

In the TAD mode, change the setting when fax reception is unsuccessful or a telephone fails to receive a call. Be sure not to set too short, otherwise the mode may be switched to fax while the unit is being used as a telephone.

1 Change the setting value by using [+] [-] keys or the numeric keys.

Contents	Setting range	Initial setting
Set the Td time-out time.	1 to 255	6 9 (120V model)

2 Press [Start] key to fix the setting.

[Completed] is displayed.

Completion

1 Press [Stop] key.

Return to the screen for selecting maintenance number.

U650 Modem 1

(Message: Modem 1)

Contents

Set the G3 cable equalizer. Set the modem detection level.

Purpose

Adjusts the equalizer to be compatible with the line characteristics

Set to Improve the accuracy of communication when using a low quality line

Method

1 Press [Start] key.

2 Select the item to set.

Items	Contents
Reg G3 TX Eqr	Set the G3 transmission cable equalizer.
Reg G3 RX Eqr	Set the G3 reception cable equalizer.
RX Mdm Level	Set the modem detection level.

Setting: Reg G3 TX Eqr

1 Select [0dB], [4dB], [8dB] or [12dB].

Initial setting: 0dB

2 Press [Start] key to fix the setting.

[Completed] is displayed.

Setting: Reg G3 RX Eqr

1 Select [0dB], [4dB], [8dB] or [12dB].

Initial setting: 0dB

2 Press [Start] key to fix the setting.

[Completed] is displayed.

Setting: RX Mdm Level

1 Select [-33dBm], [-38dBm], [-43dBm] or [-48dBm].

Initial setting: -43dBm

2 Press [Start] key to fix the setting.

[Completed] is displayed.

Completion

1 Press [Stop] key.

Return to the screen for selecting maintenance number.

U651 Modem 2

(Message: Modem 2)

Contents

Set the modem output level.

Purpose

Adjust to make the equalizer compatible with the line characteristics when installing the main unit

Setting

1 Press [Start] key.

2 Select the item to set.

3 Change the setting value by using [+] [-] keys or the numeric keys.

Items	Contents	Setting range
Sgl LVL Modem	Set the modem output level	-15 to 0
DTMF LEV (Cent)	DTMF output level (center value)	-15.0 to 0.0
DTMF LEV (Diff)	Set the DTMF output level (level difference)	0 to 5.5

Initial setting

Items	America	Europe	Australia	New Zealand	Singapore
Sgl LVL Mdm	-11	-11	-13	-13	-11
DTMF LEV(C)	-6	-8	-7	-8	-7
DTMF LEV(D)	2	2	1.5	1	2

4 Press [Start] key to fix the setting.

[Completed] is displayed.

Completion

1 Press [Stop] key.

Return to the screen for selecting maintenance number.

U660 Call Setting

(Message: Set Calls)

Contents

Set the NCU (network control unit).

Purpose

Execute as required

Method

1 Press [Start] key.

2 Select the item to set.

The screen for setting is displayed.

Items	Contents
Exchange	Setting the PBX/PSTN connection
Dial Tone	Set the PSTN dial tone detection.
Busy Tone	Set the busy tone detection.
PBX Setting	Setting the PBX connection
DC Loop	Set the loop current detection before dialing.

Setting: Exchange

Selects if the FAX is connected to either a PBX or public switched telephone network.

1 Select the item to set.

Items	Contents
PSTN	Connected to the public switched telephone network.
PBX	Connecting to the PBX

Initial setting: PSTN

2 Press [Start] key to fix the setting.

[Completed] is displayed.

Setting: Dial Tone

Selects whether or not to check for a dial tone to check if the telephone is off the hook when a fax is connected to a public switched telephone network.

1 Select the item to set.

Items	Contents
On	The dial tone is detected.
Off	The dial tone is not detected.

Initial setting: On

2 Press [Start] key to fix the setting.

[Completed] is displayed.

Setting: Busy Tone

Set whether the line is disconnected immediately after a busy tone is detected, or the busy tone is not detected and the line remains connected until T0 time-out time, when a FAX signal is sent

FAX transmission may fail due to incorrect busy tone detection. When setting it to OFF, this problem may be improved. However, the line is not disconnected within the T0 time-out time even if the destination line is busy.

1 Select the item to set.

Items	Contents
On	Detects the busy tone.
Off	Does not detect the busy tone.

Initial setting: On/Off (Australia/New Zealand, Singapore)

2 Press [Start] key to fix the setting.

[Completed] is displayed.

Setting: PBX Setting

Selects the mode to connect an outside call when connected to a PBX.

IMPORTANT

*According to the type of the PBX connected, select the mode to connect an outside call.

1 Select the item to set.

Items	Contents
Flash	Flashing mode
Loop	Code number mode

Initial setting: Loop

2 Press [Start] key to fix the setting.

[Completed] is displayed.

Setting: DC Loop

Set if the loop current is detected before dialing.

1 Select the item to set.

Items	Contents
On	Loop current before dialing is detected
Off	Loop current before dialing is not detected

Initial setting: On

2 Press [Start] key to fix the setting.

[Completed] is displayed.

Completion

1 Press [Stop] key.

Return to the screen for selecting maintenance number.

U670 List output

(Message: Output List)

Contents

Outputs the list of fax communication data.

Printing a list is disabled either when a job is remaining in the buffer or when [Pause All Print Jobs] is pressed to halt printing.

Purpose

Check conditions of use, settings and transmission procedures of the FAX.

Method

1 Press [Start] key.

2 Select the item to execute.

3 Press [Start] key.

4 Output selected list.

Items	Contents
Sys Conf Report	Prints the list of software switches, local telephone number, confidential boxes, firmware versions and other information.
Action List	Prints the list of the error logs and communication lines.
Self Sts Report	Prints the list of FAX communication settings only in the maintenance mode (self-status report).
Protocol List	Outputs a list of communication procedures.
Error List	Output the error list.
Addr List(No.)	Outputs address book in the IDs order
Addr List(Idx)	Outputs address book in the order of names.
One-touch List	Outputs a list of one-touch.
Group List	Outputs the group list.

Completion

1 Press [Stop] key.

Return to the screen for selecting maintenance number.

U671 FAX backup data clear

(Message: Clr FAX Bkup Data)

Contents

clear the FAX/i-FAX communication history and scheduled FAX transmission backup data in the FAX PWB.

Purpose

Execute to prevent information disclosure of the backup data.

Setting

1 Press [Start] key.

2 Select the object item.

Items	Contents
Rec FAX Strg	Enable to use the DIMM used in another machine. Use for releasing C0650
FAX Data Clr	clear all the data in the DIMM.
Change FAX Strg	Change folder for the backup data

Method: FAX Data Clr

1 Select [FAX Data Clr] .

2 Press [Start] key.

clear the backup data.

3 Turn the power switch off then on. Wait more than 5 seconds between the power off and on.

Method: Change FAX Strg

1 Select: [Change FAX Strg] .

2 Select the item to execute.

Items	Contents
SSD	Set SDD as destination.
HDD	Set HDD as destination.

3 Press [Start] key to fix the setting.

- [Change FAX Storage] is available only if the security kit is on.
- In case that the security kit is off, SSD is set as destination device.

Completion

1 Press [Stop] key.

The screen for selecting a maintenance item No. is displayed.

U695 FAX function customization

(Message: Custom FAX Func)

Contents

FAX package transmission is set up. Changes print size priority when receiving small size.

Purpose

Execute as required

Method

1 Select the item to set.

Items	Contents
FAX Bulk TX	FAX batch transmission is set up.
A5 Pt Pri Chg	Change of print size priority at the time of small size reception.
DetectionTime	Setting detection time of FAX print job suspend error (C0950).

Setting: FAX Bulk TX

1 By using [+] [-] keys, select [On] or [Off].

Items	Contents
On	FAX batch transmission is enabled.
Off	FAX batch transmission is disabled.

Initial setting: On

2 Press [Start] key to fix the setting.

[Completed] is displayed.

Setting: A5 Pt Pri Chg

1 By using [+] [-] keys, select [On] or [Off].

Items	Contents
On	At the time of A5 size reception: A5 >B5 >A4 >B4 >A3
Off	At the time of A5 size reception: A5 >A4 >B5 >A3 >B4

2 Initial setting: Off

3 Press [Start] key to fix the setting.

[Completed] is displayed.

Setting: Detection Time

1 Change the setting value by using [+] [-] keys or the numeric keys.

Items	Contents	Setting range	Initial setting
DetectionTime	Setting detection time of FAX print job suspend error (Time).	1/2/3	3 hours

2 Press [Start] key to fix the setting.

[Completed] is displayed.

Completion

1 Press [Stop] key.

Return to the screen for selecting maintenance number.

U698 Setting the maintenance port

(Message: Set Port for Mnt)

Contents

Set the port applicable to the maintenance mode.

Purpose

Set the maintenance mode target port when installing multiple ports .

Setting is unnecessary if the same contents are set for both ports. Set only when different items are set for each port.

NOTE

This maintenance mode only appears when the multiple ports are installed.

Setting

1 Press [Start] key.

2 Press [Port Select].

Current setting display is inverted.

1 Select the item to set.

Items	Contents
ALL	All ports
Port1	Port 1 (FAX PWB port)
Port2	Port 2 (Optional multiple port)

2 Press [Start] key to fix the setting.

IMPORTANT

These contents to set are cleared when exiting the maintenance mode or turning the power off and the settings are necessary when entering the maintenance mode.

Completion

1 Press [Stop] key.

The screen for selecting a maintenance item No. is displayed.

U699 Software switch: Set

(Message: Set Soft SW)

Contents

Set the FAX software switches individually.

Purpose

Change the setting when a problem such as split output of received originals occurs

NOTE

Since the communication performance is largely affected, normally this setting need not be changed.

Method

1 Press [Start] key.

2 Select [SW No.].

3 Enter the desired software switch number (3 digits) using the numeric keys and press [Start] key.

Items	Contents
SW No.	Specifies the software switch number (2 to 3 digits)

4 Press the keys of bit 0 to 7 to switch each bit between 0 and 1.

Items	Contents
Bit	Set the software switch bit (8bit).

NOTE

The bits are arranged in the order of Bit 7, Bit 6, Bit 5, Bit 4, Bit 3, Bit 2, Bit 1, and Bit 0 from the left. To switch the bit value, press the corresponding part. (Each press switches between 0 and 1.)

Bit7	Bit6	Bit5	Bit4	Bit3	Bit2	Bit1	Bit0
0	0	0	0	0	0	0	0

5 Press [Start] key to fix the setting.

[Completed] is displayed.

Completion

1 Press [Stop] key.

Return to the screen for selecting maintenance number.

U901 Clearing the counters by paper source

(Message: Clr Paper FD Cnt)

Contents

Display and clear the counts by paper source.

Purpose

Check the maintenance parts replacement timing. Executes to clear counters when replacing the maintenance parts.

Method

1 Press [Start] key.

Display the counts by paper source.

Items	Contents
MPT	Display/clear the MP tray feed counter
Cass1	Display/clear Cassette 1 count
Cass2	Display/clear Cassette 2 count
Cass3 *1	Display Cassette 3 count
Cass4 *1	Display Cassette 4 count
Cass5 *2	Display Cassette 5 count
Dup	Display/clear the duplex unit count

*1: 500-sheetx2/1500-sheetx2, *2: 3000-sheet side paper feeder

2 Select the counter to clear.

Unable to clear [Cassette 3], [Cassette 4] and [Cassette 5]

3 Press [Start] key to clear the counter value.

- In case if the counter value between the main unit and the feed counter are not matched, the following screen comes up and display to select the correct counter value.

Items	Contents
Cass3 Eng*	Display the counter value of [Engine]
Cass3 Unit*	Display the counter value of [Unit]
Cass4 Eng*	Display the counter value of [Engine]
Cass4 Unit*	Display the counter value of [Unit]
Cass5 Eng*	Display the counter value of [Engine]
Cass5 Unit*	Display the counter value of [Unit]
Backup	Backup the current counter value

*: Display only if cassette 3 to cassette 5 are installed.

1 Select the item to set.

2 Press [Start] key to fix the setting.

Method: Backup

1 Press [Start] key.

Display the counts by paper source.

Items	Contents
Cass3	Select the item to backup
Cass4 *1	Select the item to backup
Cass5	Select the item to backup
Execute	Perform the backup

*1: Affected Cass4 feed counter for the backup is prohibited to change. However, it changes the value same way as Cass3.

After completing the backup of the feed counter, display the message to ask for turn Off/On the power.

In case of completing the backup abnormally, it is necessary to perform the backup again after turning Off/On the power.

Result: Power SW Off/On

After performing the backup, if the backup is completed successfully, "OK" is displayed. and if failed, "2" is displayed.

Completion

1 Press [Stop] key.

Return to the screen for selecting maintenance number.

U903 Clearing the jam counter

(Message: Clr Paper JAM Cnt)

Contents

Display/clear the jam counter by paper jam type.

Purpose

Execute to check the paper jam status. Executes to clear counters when replacing the maintenance parts.

Method

1 Press [Start] key.

2 Select the item to execute.

Items	Contents
Cnt	Displaying/clearing the jam counts
Total Cnt	Displaying the accumulate jam counts

Method: Cnt

1 Select [Cnt].

Number of occurrence is displayed by jam code.

Code of no occurrence is not indicated.

2 Select [Clear] to clear the jam counts.

Individual counters cannot be cleared.

3 Press [Start] key to clear the counter value.

Method: Total Cnt

1 Select [Total Cnt].

Accumulate number of occurrence is displayed by jam code.

2 Change the screen using [▲] [▼] key.

Unable to clear the accumulated jam counter values.

Completion

1 Press [Stop] key.

Return to the screen for selecting maintenance number.

U904 Clearing the service call error counter

(Message: Clr Svc Call Cnt)

Contents

Display/clear the number of times of service call errors by service call error type.

Purpose

Executes to check the service call error. Executes to clear counters when replacing the maintenance parts.

Method

1 Press [Start] key.

2 Select the item to execute.

Items	Contents
Cnt	Display/clear the service call counter.
Total Cnt	Display accumulate service call error counts.

Method: Cnt

1 Select [Cnt].

Number of occurrence is displayed by service call error.
Code of no occurrence is not indicated.

2 Select [Clear] to clear the service call error counter.

Individual counters cannot be cleared.

3 Press [Start] key to clear the counter value.

Method: Total Cnt

1 Select [Total Cnt].

Accumulate number of occurrence is displayed by service call error.
Unable to clear the accumulated service call error counter values.

Completion

1 Press [Stop] key.

Return to the screen for selecting maintenance number.

U905 Optional counter

(Message: Option Cnt)

Contents

Display the counter values of the document processor, 1000-sheet/4000-sheet/100-sheet staple finishers and inner finisher.

Purpose

Execute to check the usage status of the document processor, 1000-sheet/4000-sheet/100-sheet staple finishers and inner finisher.

Method

1 Press [Start] key.

2 Select the device to check.

Switched to the counter screen.

Items	Contents
DP *1	Display the counter value of the document processor
DF *2	Display the counter value of the document finisher
Inserter *3	Display the counter value of the inserter
Z-Fold *4	Display the counter value of the Z-Fold
Inner shift tray *5	Display the counter value of the inner shift tray

*1: DP installed machine, *2: DF installed machine, *3: Inserter installed machine, *4: Z-Fold installed machine, *5: Inner shift

tray installed machine

Method: DP

Each counter is displayed.

Items	Contents
ADP	Display the feed counter value of the simplex original
RADP	Display the feed counter value of the duplex original
CIS *1	Display the counter value of the simultaneous duplex scanning

*1: Simultaneous duplex scanning DP installed machine

Method: DF

Each counter is displayed.

Items	Contents
Carry in	Display the counter value of the DF feed
Staple	Display the counter value of the staple usage
Punch	Display the counter value of the punch usage
Tray A	Display the exit counter value of the main tray
Saddle *1	Display the saddle exit counter value
Fold *1	Display the counter value of the center folding
Three Fold *1	Display the counter value of the three folding

*1: 4000-sheet/100 sheet staple finisher installed machine

Method：Inserter

Each counter is displayed.

Items	Contents
Inserter1	Display the feed counter value of the inserter1
Inserter2	Display the feed counter value of the inserter2
Eject	Display the exit counter value

Method：Z-Fold

Each counter is displayed.

Items	Contents
Bi	Display the counter value of the center holding
Tri	Display the counter value of the inner three fold
Z	Display the counter value of the outside three fold
Engineering	Display the counter value of the Z-Fold
Total	Display the total counter value

Method：Inner Shift Tray

Each counter is displayed.

Items	Contents
Eject	Display the exit counter value

Items	Contents
Shift	Display the shift counter value
Move	Display the move counter value

Completion

1 Press [Stop] key.

Return to the screen for selecting maintenance number.

U906 Resetting the partial operation

(Message: Reset Dis Func)

Contents

Release the service call error with partial operation.

Purpose

If the partial operation is executed with a broken cassette, etc., make sure to execute it after repairing the parts.

And resetting the partial operation allows to use the functions that is not failed.

NOTE

Units and functions that can be reset

- Document processor
- Paper feeder
- Document finisher
- Punch unit
- Hard disc
- Print function
- Scan function
- FAX function

  FAX function can not be used when print function is reset disable.

  When reset FAX disable, either send or receive can not be used.

IMPORTANT

When reset the disable function, the related setting can not be changed.

Method

1 Press [Start] key.

2 Select [Execute].

Items	Contents
Execute	Reset the partial operation.

3 Press [Start] key to release the partial operation.

4 Turn the power switch off then on. Wait more than 5 seconds between the power off and on.

Completion

1 Press [Stop] key.

Return to the screen for selecting maintenance number.

U908 Total counter

(Message: Total Cnt)

Contents

Display the total counter.

Purpose

Display the total counter for check.

Method

1 Press [Start] key.

Display the total count.

Completion

1 Press [Stop] key.

Return to the screen for selecting maintenance number.

U910 Black rate data

(Message: Clr Coverage Dat)

Contents

Clear the accumulated data for the print coverage per A4 size paper and its period of time (as shown on the service status page).

Purpose

clear data as required at the time such as maintenance

Method

1 Press [Start] key.

2 Select [Execute].

Items	Contents
Execute	Clear the print coverage data

3 Press [Start] key to clear the print coverage data.

Completion

1 Press [Stop] key.

Return to the screen for selecting maintenance number.

U911 Counter by media type

(Message: Paper SZ Cnt)

Contents

Display the paper feed counts by paper size.

Purpose

Display the counts to confirm when replacing the maintenance parts .

Method

1 Press [Start] key.

Display the paper feed counts by paper size.

Items	Contents
A3 *1	Display A3 feed counts
B4 *1	Display B4 feed counts
A4 *1	Display A4 feed counts
B5 *1	Display B5 feed counts
A5 *1	Display A5 feed counts
Folio *1	Display Folio feed counts
Ledger *2	Display Statement feed counts
Legal *2	Display Legal feed counts
Letter *2	Display Letter feed counts
Statement *2	Display Statement feed counts
ETC	Display Other paper feed counts.

*1: metric specification, *2: inch specification

Completion

1 Press [Stop] key.

Return to the screen for selecting maintenance number.

U917 Read/Write Backup Data

(Message: R/W Bkup Data)

Contents

Retrieve the backup data to a USB drive from the main unit, or writes the data from the USB drive to the main unit.

Purpose

Makes a back up of the main unit information, and import or export to restore the main unit information

Method

1 Turn the power switch off.

2 Insert USB drive into the USB drive slot.

3 Turn the power switch on.

Wait for about 10 seconds until the main unit recognizes a USB drive.

4 Press [Start] key.

5 Select the object item.

Items	Contents	Depending data*
Address Book	Address book information	-
Job Account	Job accounting information	-
One Touch	One-touch key information	Address book information
User	User management information	Job accounting information
Document Box	Document box information	Job accounting, User information
Shortcut	Short-cut information	Job accounting, User, Document Box information
Fax Frd	FAX forward information	Job accounting, User, Document Box information
System	System setting information	-
Network	Network setting information	-
Job Set	Job setting information	-
Printer	Printer setting information	-
Fax Set	FAX setting information	-
Program	Program information	Information of Address book, Job accounting, User management, Document box, FAX transfer and FAX setting
Panel Set	Panel setting information	Information of Address book, Job accounting, User management, Document box, FAX transfer, FAX setting and Program

* 1: Storing data in box are not saved as backup.

* 2: Only if fax is installed

Since data are dependent with each other, data other than selected are also retrieved or written.

6 Select [Export] or [Import].

Items	Contents
Import	Import data from the USB drive to the main unit.
Export	Retrieving data from the main unit to the USB drive.

7 Press [Start] key. Starts reading or writing.

The progress of selected item is displayed in %.

When an error occurs, the operation is canceled and an error code appears.

8 [Finish] appears after normal completion.

9 When selecting [Import], turn the power switch off then on, after completing writing. Wait more than 5 seconds between the power off and on.

Error codes

Codes	Contents
e0001	Error in the internal process
e0002	File access error (Access failure to USB drive etc.)
e0003	The XML file to import does not exist
e0004	Specified incompatible file with Import.
e0005	File is broken (Extract failure of ZIP)
e0100 to e01ff	Error in handling address-book

Completion

1 Press [Stop] key.

Return to the screen for selecting maintenance number.

U920 Billing counter

(Message: Chg Cnt)

Contents

Display the billing count.

Purpose

Execute to check the current billing counts

Method

The charge counts for the main functions are displayed.

Items	Contents
B/W Copy	Display B/W copy count is displayed.
B/W Prn	Display B/W print count is displayed
B/W FAX	Display FAX count
Simplex	Display Simplex print count
Duplex	Display Duplex print count
Combine (Off)	Display Combine print counts (Off)
Combine (2in1)	Display Combine print counts (2in1)
Combine (4in1)	Display Combine print counts (4in1)

Completion

1 Press [Stop] key.

Return to the screen for selecting maintenance number.

U927 Clearing all the billing/life counters

(Message: Clr Chg/Life Cnt)

Contents

clear all charge counts and machine life counts.

Supplement

The total charge counts and the machine life counts can be cleared only once if all count values are 1000 or less.

Method

1 Press [Start] key.

2 Select [Execute].

Items	Contents
Execute	Initializes the billing count and machine life count.

3 Press [Start] key.

clear all charge counts and machine life counts.

Completion

1 Press [Stop] key.

Return to the screen for selecting maintenance number.

U928 Machine life counter

(Message: Life Cnt)

Contents

The current machine life counts is displayed.

Purpose

Executed to check the machine life count

Method

1 Press [Start] key.

The current machine life counts is displayed.

Items	Contents
Cnt	Display the machine life count

Completion

1 Press [Stop] key.

Return to the screen for selecting maintenance number.

U930 Clear the main charger roller counts

(Message: Clr Chg Cnt)

Contents

Display and clear the current main charger roller counts.

Purpose

To verify the main charger roller counts after replacing. Also, clear the counts after replacement

Method

1 Press [Start] key.

The main charge roller counter for each color is displayed.

Items	Contents
K	The current main charger roller count for K is displayed.
Clear	Clear all the counters

Method

1 Select [Clear]

Clear all the counters.

Completion

1 Press [Stop] key.

Return to the screen for selecting maintenance number.

U933 Setting the maintenance mode log

(Message: Set Mnt Log)

Contents

Set the function to record the in/out date of the maintenance mode or date executing each maintenance item individually and output the log file.

Purpose

Record the maintenance mode history to analyze the cause when a problem occurs.

Method

1 Press [Start] key.

2 Select the item to set.

The screen for setting is displayed.

Items	Contents
Export	Exports Maintenance Log.
Setting	Maintenance log output setting

Method: Export

1 Select [Execute].

Items	Contents
Execute	Export the maintenance log to a USB drive.

2 Press [Start] key.
Export the maintenance log to a USB drive.

If a USB drive is not inserted, [Execute] is grayed out .

Display OK/NG after execution.

Setting: Setting

1 Select the item to set.

Select the key including the number to set indicated by each block.

The screen for setting is displayed.

Items	Contents
U000-U019	Set the maintenance log output for U000 to U019.
U020-U029	Set the maintenance log output for U020 to U029.
U030-U059	Set the maintenance log output for U030 to U059.
U060-U099	Set the maintenance log output for U060 to U099.
U100-U129	Set the maintenance log output for U100 to U129.
U130-U159	Set the maintenance log output for U130 to U159.
U160-U199	Set the maintenance log output for U160 to U199.
U200-U249	Set the maintenance log output for U200 to U249.
U250-U349	Set the maintenance log output for U250 to U349.
U400-U499	Set the maintenance log output for U400 to U499.
U500-U599	Set the maintenance log output for U500 to U599.
U600-U699	Set the maintenance log output for U600 to U699.
U900-U999	Set the maintenance log output for U900 to U999.

Set on/off for the number desired to set.

Completion

1 Press [Stop] key.

Return to the screen for selecting maintenance number.

U935 Maintenance relay board

(Message: Mnt Relay Board)

Contents

Set the mode when there is a failure.

Purpose

Set at the time when the relay board is abnormal.

Method

1 Select [Mode].

Items	Contents
Mode	

Mode 0: Malfunction setting mode is in valid

Mode 1: Malfunction setting mode is valid

Completion

1 Press [Stop] key.

The screen for selecting a maintenance item No. is displayed.

U942 DP loop amount setting

(Message: Adj DP Loop Amt)

Contents

Adjust the paper loop amount when using the document processor.

Purpose

Execute when original no-feed jam, skew or creases on the original appears.

Method

1 Press [Start] key.

2 Press [Test Print] key.

NOTE

Pressing [Test Print] allows you to adjust setting on the screen showed below.
(Feed cassette/Conveying speed/Duplex printing/Print Set/Output tray)

3 Place an original on the DP and press [Start] key to make a test copy.

4 Press [Test Print] key.

5 Select the item to adjust.

6 Change the setting value by using [+] [-] keys or the numeric keys.

Items	Contents	Setting range	Initial setting	Data variation
Front	Single-side original loop amount	-32 to 32	0	0.20mm (DP-7150) 0.16125mm (DP-7160)
Back *1	Double-side original loop amount	-31 to 31	0	0.1758mm
Mix *2	Mixed original loop amount	-31 to 31	0	0.1758mm

*1: Reversing duplex scanning machine only

When the setting value is increased, the paper loop amount increase, and it decreases when the setting value is decreased.

Increase the set value if no feed jam or skew feed occurs and reduce the set value if creases appear on the original.

7 Press [Start] key to fix the setting.

Completion

1 Press [Stop] key.

The screen for selecting a maintenance item No. is displayed.

U952 Maintenance mode workflow

(Message: Mainte Work Flow)

Contents

Execute the maintenance items in the order of registration in the main unit or the USB drive.

Purpose

Execute to register regular maintenance items.

Method

1 Press [Start] key.

2 Select the item to execute.

The screen for executing is displayed.

Items	Contents
Continue	Resume interrupted workflow.
Execute(USB)	Executes the workflow in a USB drive.
Execute	Execute the workflow saved in the main unit.
Entry(USB)	Executes the workflow in a USB drive.
Entry	Register the workflow in the main unit manually.
Log	Display the latest workflow execution history.

Method: Continue

1 Select maintenance item number to execute.

2 Press [Start] key.

Selected maintenance mode is executed.

Method: Execute(USB)

1 Check the LED display is off and turn the power switch off.

2 Insert USB drive into the USB drive slot.

3 Turn the power switch on.

4 Enter maintenance item U952.

5 Select [Execute(USB)].

6 Select [workflow].

Items	Contents
WorkFlowData 01 - 08	Workflow data in a USB drive

7 Press [Start] key.

Execute the maintenance items in the order of registration in the workflow.

Method: Execute

1 Select the place to save the data to execute.

Items	Contents
Data 1 - 8	Workflow save area in the main unit

2 Select the item to execute.

3 Press [Start] key to start the processing.

Following workflow is preset in main unit from factory.

Items	Contents
SET UP	464, 469, 410, 000, 927, 278
HIGH ALTITUDE	140, 101, 464
WARRANTY	089, 000
MK-A	119,469,464,410,127,251
EH SETUP	411, 034, 246, 211

Method: Entry(USB)

1 Check the LED display is off and turn the power switch off.

2 Insert USB drive into the USB drive slot.

3 Turn the power switch on.

4 Enter maintenance item U952.

5 Select [Entry(USB)].

6 Select [workflow].

Items	Contents
WorkFlowData 01 - 08	Workflow data in a USB drive

7 Select the workflow save area.

Items	Contents
Data 1 - 8	Workflow save area in the main unit

8 Select [Execute].

Registers the workflow in a USB drive to the main unit.

Method: Entry

1 Select [Entry].

2 Select the workflow save area.

Items	Contents
Data 1 - 8	Workflow save area in the main unit

3 By using [+] [-] keys or the numeric keys, enter the maintenance number to register in the workflow.

Items	Contents
Flow 1 - 14	Registered maintenance numbers

4 Press [Start] key to fix the setting.

5 Press [Start] key.

Execute the maintenance items in the order of registration in the workflow.

e.g.

When inserting a USB drive the following items can be registered: commands, texts and maintenance numbers (variable).

File format: xxx.mwf

1, SET UP, 464, 469, 410, 000, 927, 278

2, HIGH ALTITUDE, 140, 101, 464

3, WARRANTY, 089, 000

4, MK-A, 119, 930, 140, 469, 127, 464, 469, 412, 464, 410, 251

5, MK-B, 119, 930, 140, 464, 469, 412, 464, 410, 251

6, EH SETUP, 411, 034, 246, 211

Completion

1 Press [Stop] key.

Return to the screen for selecting maintenance number.

U964 Retrieve Log Flow

(Message: Blank)

Contents

Transfer the log files saved in the HDD to a USB drive.

Purpose

In order to investigate a failure, retrieve the log file saved in the HDD to a USB drive.

Method

1 Check the LED display is off and turn the power switch off.

2 Insert USB drive into the USB drive slot.

3 Turn the power switch on.

4 Enter maintenance item U964.

5 Select [Execute].

Items	Contents
Execute	Transfer the log file.

6 Press [Start] key.

Starts transferring the log files saved in the HDD to a USB drive.

[Processing] is displayed. (About 3 to 5 minutes)

7 [Completed] appears after normal completion.

8 Turn the power switch off then on. Wait more than 5 seconds between the power off and on.

An error code appears when there is an error.

Error codes

Display	Contents
No USB Storage	The USB drive is not installed
No File	No file
Mount Error	USB drive mount error
File Delete Error	Failed to delete existing files in the USB drive
Copy Error	HDD to USB drive copy failure
Unmount Error	USB drive unmount error
Collection Error	Log collection failure
Other Error	Other error

Completion

1 Press [Stop] key.

Return to the screen for selecting maintenance number.

U977 Setting the data capture mode

(Message: Set Data Capture)

Contents

Stores the data sent to the main unit into a USB drive.

Purpose

Store the data sent to the main unit into a USB drive to check it.

Method

1 Press [Start] key.

2 Select [Execute].

Items	Contents
Execute	Stores data in a USB drive.
Stop	Stop storing

3 Press [Start] key.

When the operation is completed abnormally, an error code is displayed.

Error codes

Items	Contents
1	USB drive is broken. USB drive was disconnected during data processing or is write-protected.
4	USB drive is full.
50	Other error occurs

Completion

1 Press [Stop] key.

Return to the screen for selecting maintenance number.

- The Stop button is valid only during data capture.
- The stop process is started just by pressing the Stop button.
- After stopping data capture, "Finish" is displayed if no error has occurred.
- If data is being received when the Stop button is pressed, it stops after the reception is completed.
- Captured data saves the file in '/datacap' directory, and file name is 'datacap_XX.capt'(XX is sequential number).

U981 Set/Check CBM Alert Data

(Message: CBM Alert Data)

Contents

Reference / change information on CBM (condition based maintenance) in KFS.

Purpose

Reference and change setting of the current value of the counter and threshold / set value related to CBM (condition based maintenance).

Method

1 Press [Start] key.

2 Select [Cass Feed]

Items	Contents
Cass Feed	Check the paper feed timing

1 Select [Feed Error]

Items	Contents
Feed Error	Check the paper feed error threshold

Setting: Cass1/Cass2/Cass3/Cass4

Items	Contents
Cass1	Check and change the threshold/setting value of the Cassette1
Cass2	Check and change the threshold/setting value of the Cassette2
Cass3	Check and change the threshold/setting value of the Cassette3
Cass4	Check and change the threshold/setting value of the Cassette4

Completion

1 Press [Stop] key.

Return to the screen for selecting maintenance number.

U984 Developer unit number

(Message: Developing Unit Number)

Contents

Display the developer unit number.

Purpose

Execute to check the developer unit number.

Method

1 Press [Start] key.

Display the developer unit number.

Items	Contents
C	Display the Cyan developer unit number
M	Display the Magenta developer unit number
Y	Display the Yellow developer unit number
K	Display the Black developer unit number

Completion

1 Press [Stop] key.

Return to the screen for selecting maintenance number.

U985 Developer unit history

(Message: Developing Unit History)

Contents

Display the machine serial number and developer counter history.

Purpose

Display the machine serial number and developer count to check.

Method

1 Press [Start] key.

Select color to refer to.

Items	Contents
C	Display the Cyan developer unit history
M	Display the Magenta developer unit history
Y	Display the Yellow developer unit history
K	Display the Black developer unit history

Display the machine serial number and 3 items of the developer counter history

Items	Contents
Machine History 1 to 3	Machine serial number history
Cnt History1 to 3	Developer counter history

Completion

1 Press [Stop] key.

Return to the screen for selecting maintenance number.

U989 HDD scan disk

(Message: HDD Scan disk)

Contents

Apply Scan disk to the HDD for data recovery.

Purpose

Execute recovery of HDD management data error by turning the power off while accessing to the HDD.

Method

1 Press [Start] key.

2 Select [Execute].

Items	Contents
Execute	HDD scan disk request

3 Press [Start] key to execute Scan disk.

4 Turn the power switch off then on. Wait more than 5 seconds between the power off and on.

Completion

1 Press [Stop] key.

Return to the screen for selecting maintenance number.

U990 Clearing the scanner lighting time

(Message: Clr Lamp On Time)

Contents

Display the accumulated CIS lighting time

Purpose

Execute to check the CIS usage.

Method

1 Press [Start] key.

CIS accumulated lighting time is displayed in minutes.

Items	Contents
CIS	Display the accumulated CIS lamp lighting time

Completion

1 Press [Stop] key.

Return to the screen for selecting maintenance number.

U991 Scanner counter

(Message: Scn Cnt)

Contents

Display the scanner operation counts.

Purpose

Display the number of scanner operation to check the usage status.

Method

1 Press [Start] key.

Current number of operation is displayed.

Items	Contents
Copy Scan	Display times of copy and scan operations
Fax Scan	Display times of FAX scan operations
Other Scan	Display times of other scan operations

Completion

1 Press [Stop] key.

Return to the screen for selecting maintenance number.

7 Troubleshooting

7 - 1 Image formation problems

(1)Isolate the place of image failure

How to isolate the cause

Print Test Page to check an image failure.

[System Menu] > [Adjustment/Maintenance] > [Service Setting]

Yes: engine factor

No: Scanner factor

Check if image failure is enlarged or reduced in the zoom mode.

Yes: Scanner factor

1 Scanner factor: Refer to [Image failure at Copy or Send] (See page page 7-2, page 7-16or page 7-26).

(LED lamp for originals on the contact glass → CCD failure at scanning factor)

Isolate with the original scanning position.

a. DP simplex (Scan by the main unit CCD)

b. On the contact glass (Scan by the main unit CCD)

2 Refer to image failure with engine factor (See page page 7-37 or page 7-53).

(Main charge --> Drum --> LSU --> Developer --> Transfer image formation process failure)

Image data flow

Copying :



Sending :



Printing data from PC :

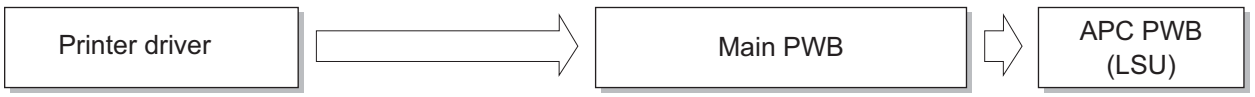

(2)Scanner Factors (When scanning the front side through DP, or scanning the back side through the mechanically reversed DP)

No.	Contents	Image sample
(2-1)	Abnormal image (page 7-5)	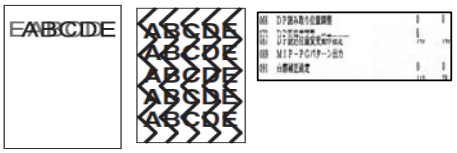
(2-2)	Colored background (page 7-6)	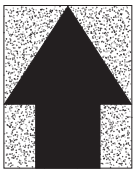
(2-3)	Black or color spots (page 7-7)	
(2-4)	Blurred characters (page 7-7)	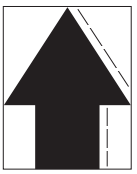
(2-5)	Mismatch between the original center line and output image center line (first side) (page 7-8)	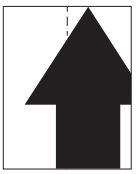
(2-6)	Mismatch between the original center line and output image center line (second side) (page 7-8)	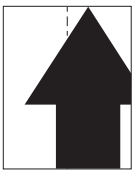
(2-7)	Horizontal black streaks (page 7-8)	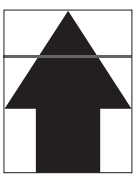
(2-8)	Vertical streaks, band (black or color) (page 7-9)	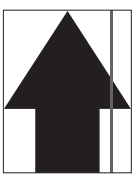

No.	Contents	Image sample
(2-9)	Regular difference of the leading edge on the original image and output image (Front side) (page 7-10)	
(2-10)	Regular difference of the leading edge on the original image and output image (Back side) (page 7-10)	
(2-11)	Vertical streaks, band (white) (page 7-11)	
(2-12)	Moire (front side) (page 7-11)	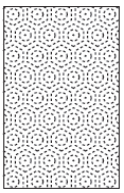
(2-13)	Moire (back side) (page 7-11)	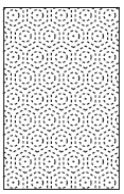
(2-14)	Missing entire image (White / Black) (page 7-12)	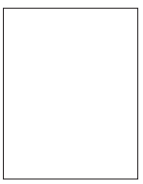 
(2-15)	Image is dark partly or light (page 7-12)	
(2-16)	Blurred image (page 7-13)	

No.	Contents	Image sample
(2-17)	Image is missing partly (page 7-13)	
(2-18)	Color shift (page 7-14)	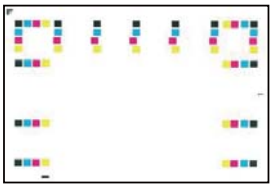 
(2-19)	Skewed image (page 7-14)	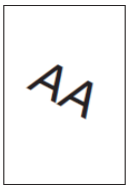
(2-20)	Entire image is light (page 7-15)	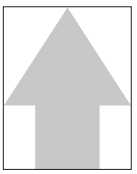

Content of Scanner Factors (when scanning from DP)

(2-1)Abnormal image

(When scanning the front side through DP or scanning the back side through the mechanically reversed DP)

Step	Check description	Assumed cause	Measures	Reference
1	Checking the connection	The connector or the FFC is not connected properly. Or,the wire,FFC,the cable is faulty.	Reconnect the wire/cable connectors. Clean and reconnect the FFC. If there is no continuity,replace the wire/cable.If the FFC terminal section is deformed or FFC is broken,replace the FFC. • Image sensor PWB - Main PWB • Engine PWB - Main PWB • HDD - Main PWB	
2	Replacing the HDD	The HDD is faulty.	Replace the HDD.	
3	Checking the lens unit	The lens unit is not properly attached or the image sensor PWB is faulty.	Reinstall the lens unit.If not resolved,replace the lens unit.	
4	Replacing the engine PWB	The engine PWB is faulty.	Replace the engine PWB.	
5	Replacing the main PWB	The main PWB is faulty.	Replace the main PWB.	

(2-2)Colored background

(When scanning the front side through DP, or scanning the back side through the mechanically reversed DP)

Step	Check description	Assumed cause	Measures	Reference
1	Reloading the original	The original is raised at scanning.	Set the original during pressing.	
2	Changing the setting	The Background Density Adjustment is not set.	Set [Auto] for [Background Density Adjustment] in the system menu.	
3	Changing the setting	The background density is dark.The original background density is dark. The background density adjustment is dark.	Set [Manual] for [Background Density Adjustment] in the system menu and adjust the background image density.	
4	Executing U411	The image is not adjusted.	When the same phenomenon occurs at the table scanning too,execute U411 [Table(ChartA)].	
5	Cleaning the shading plate	The shading plate is dirty.	Clean the shading plate at the backside of the contact glass.	
6	Checking the slit glass	The slit glass is dirty or not properly attached.	Clean the slit glass or reattach it.	
7	Adjusting the left DP hinge height	The original is raised at scanning.	Adjust the left DP hinge height.	
8	Checking the home position sensor	The home position sensor is not properly attached.	Reattach the home position sensor.	
9	Checking the connection	FFC is not connected properly. Or,FFC is faulty.	Clean and reconnect the FFC. If the FFC terminal section is deformed or FFC is broken,replace the FFC. • LED drive PWB - Image sensor PWB • Image sensor PWB - Main PWB • Engine PWB - Main PWB	
10	Replacing the lens unit	The image sensor PWB is faulty.	Replace the lens unit.	
11	Checking the lamp unit	The lump unit is not properly attached or the led drive PWB is faulty.	Reinstall the lump unit.If not resolved,replace the lump unit.	
12	Replacing the document processor	The DP frame is deformed or the DP hinges are faulty.	Replace the document processor.	
13	Replacing the engine PWB	The engine PWB is faulty.	Replace the engine PWB.	
14	Replacing the main PWB	The main PWB is faulty.	Replace the main PWB.	

(2-3)Black or color spots

(When scanning the front side through DP, or scanning the back side through the mechanically reversed DP)

Step	Check description	Assumed cause	Measures	Reference
1	Replacing the original	The original is dirty.	Replace the original.	
2	Cleaning the slit glass	The slit glass is dirty.	Clean the slit glass.	
3	Checking the connection	FFC is not connected properly. Or,FFC is faulty.	Clean and reconnect the FFC. If the FFC terminal section is deformed or FFC is broken,replace the FFC. • Image sensor PWB - Main PWB • Engine PWB - Main PWB	
4	Replacing the lens unit	The image sensor PWB is faulty.	Replace the lens unit.	
5	Replacing the engine PWB	The engine PWB is faulty.	Replace the engine PWB.	
6	Replacing the main PWB	The main PWB is faulty.	Replace the main PWB.	

(2-4)Blurred characters

(When scanning the front side through DP, or scanning the back side through the mechanically reversed DP)

Step	Check description	Assumed cause	Measures	Reference
1	Checking the original	The originals out of specification are used. (They are thick,thin,or smooth.)	Ask a user to use the specified paper.	
2	Correcting the original	The leading edge of the original is bent.	Stretch the bending or the paper creases of the original.	
3	Cleaning the DP conveying roller and the bushings	The DP conveying roller or the bushing is dirty.	Clean the DP conveying roller and bushing.	
4	Checking the DP conveying pulley and the pressure spring	The original conveying pulley does not rotate smoothly.	Reattach the DP conveying pulleys and the pressure springs.	
5	Checking the DP drive parts	The DP drive parts are not properly attached.	Reattach the DP drive parts.	
6	Checking the original pick-up guide	The original pick-up guide does not operate properly.	Reattach the original pick-up guide.	
7	Replacing the DP scanning guide	The DP scanning guide is deformed.	Replace the DP scanning guide.	
8	Adjusting the left DP hinge height	The front and rear heights of the DP do not match.	Adjust the left DP hinge height.	
9	Checking the DP	The document processor is not properly installed in the main unit.	Check the positioning of the document processor and tighten the screws again.	
10	Replacing the DP hinges	DP hinge is faulty. (The DP hinge does not operate smoothly in the up and down direction,and the right and left sides of the DP are distorted because the DP can not hold the opened condition.)	Replace the DP hinges.	

(2-5)Mismatch between the original center line and output image center line (first side)

(When scanning the front side through DP)

Step	Check description	Assumed cause	Measures	Reference
1	Reloading the original	The originals are not properly set on the original tray.	Reset the originals.	
2	Executing U072	The center line when scanning the front page of the originals at the document processor is not adjusted.	Adjust U072 [Front].	
3	Executing U411	The auto scanner adjustment when DP scanning is not executed.	Execute U411 [DP Auto Adj]. (For the dual scan DP only)	
4	Executing U411	The auto scanner adjustment when DP scanning is not executed.	Execute U411 [DP FU(Chart B)].	

(2-6)Mismatch between the original center line and output image center line (second side)

Target: Reverse automatic DP

(When scanning the back side through the mechanically reversed DP)

Step	Check description	Assumed cause	Measures	Reference
1	Reloading the original	The originals are not properly set on the original tray.	Reset the originals.	
2	Executing U072	The center line when scanning the back page of the originals at the document processor is not adjusted.	Adjust U072 [Back].	

(2-7)Horizontal black streaks

(When scanning the front side through DP, or scanning the back side through the mechanically reversed DP)

Step	Check description	Assumed cause	Measures	Reference
1	Replacing the original	The original is dirty.	Replace the original.	
2	Cleaning the slit glass	The slit glass is dirty.	Clean the slit glass.	
3	Executing U411	Scanning the image on the back of the size indication plate. (U411 [Table(ChartA)] adjustment value is not proper.)	Execute U411 [Table(ChartA)].	
4	Checking the connection	FFC is not connected properly. Or it is faulty.	Clean the FFC terminals of the following FFC and reconnect them. If the FFC terminal is deformed or broken,replace the FFC. • Image sensor PWB - Main PWB	
5	Replacing the lens unit	The image sensor PWB is faulty.	Replace the lens unit.	
6	Replacing the main PWB	The main PWB is faulty.	Replace the main PWB.	

(2-8)Vertical streaks, band (black or color)

(When scanning the front side through DP, or scanning the back side through the mechanically reversed DP)

Step	Check description	Assumed cause	Measures	Reference
1	Replacing the original	The original is dirty.	Replace the original.	
2	Cleaning the contact glass and DP conveying guide	The slit glass or the DP conveying guide is dirty.	Clean the slit glass and DP conveying guide.	
3	Cleaning the contact glass and shading plate	The contact glass or the shading plate is dirty.	Clean the contact glass and shading plate at the backside.	
4	Cleaning the mirror	The mirror is dirty.	Clean the mirror in the lamp unit.	
5	Checking the lamp unit	The dust is adhered on the lamp unit.	Remove dust inside the laser path of the lamp unit.	
6	Cleaning the Image sensor PWB	Dust is on the Image sensor PWB.	Clean the Image sensor PWB using an air-blower.	
7	Changing the setting	Actual original size and detected original size are mismatched.	Set [Original Size] in the System Menu.	
8	Executing U067	The center line settings are incorrect. (The streaks or bands appear out of the original image.)	Adjust U067 [Front].	
9	Executing U411	The leading edge timing is incorrect. (Streaks or bands appear out of the original.)	Execute U411 [Table(ChartA)].	
10	Executing U068	The starting position for scanning an original on the DP is incorrect.	Adjust U068 [DP Read].	
11	Executing U072	The center line settings are incorrect. (The streaks or bands appear out of the original image.)	Adjust U072 [Front].	
12	Executing U411	The leading edge timing is incorrect. (Streaks or bands appear out of the original.)	Execute U411 [DP Auto Adj].	
13	Executing U411	The leading edge timing is incorrect. (Streaks or bands appear out of the original.)	Execute U411 [DP FU(Chart B)].	
14	Checking the connection	FFC is not connected properly. Or it is faulty.	Clean the FFC terminals of the following FFC and reconnect them. If the FFC terminal is deformed or broken,replace the FFC. • Image sensor PWB - Main PWB	
15	Replacing the lens unit	The image sensor PWB is faulty.	Replace the lens unit.	
16	Replacing the main PWB	The main PWB is faulty.	Replace the main PWB.	

(2-9)Regular difference of the leading edge on the original image and output image (Front side)

(When scanning the front side through DP)

Step	Check description	Assumed cause	Measures	Reference
1	Executing U071	The timing of scanning the original leading edge at the document processor is not properly set.	Adjust U071 [Front].	
2	Executing U411 (Dual scan DP)	The starting position for scanning an original on the DP is incorrect.	Execute U411 [DP Auto Adj].	
3	Executing U411	The starting position for scanning an original on the DP is incorrect.	Execute U411 [DP FU(Chart B)].	
4	Cleaning the DP conveying roller and the bushings	The DP conveying roller or the bushing is dirty.	Clean the DP conveying roller and bushing.	
5	Replacing the DP conveying roller	The DP conveying roller is worn down.	Replace the DP conveying roller.	
6	Applying the grease	The DP conveying motor rotates irregularly,and so the excessive load is given to the DP drive gear.	Apply the grease to the drive gear of the DP conveying motor. (EM-50LP: Part number (7BG010009H))	
7	Replacing the DP conveying motor	The DP conveying motor is abnormal and the rotation is uneven	Reattach the DP conveying motor and reconnect the connector. If not repaired,replace it.	

(2-10)Regular difference of the leading edge on the original image and output image (Back side)

Target: Reverse automatic DP

(When scanning the back side through the mechanically reversed DP)

Step	Check description	Assumed cause	Measures	Reference
1	Executing U071	The timing of scanning the leading edge on the back page of the originals at the document processor is not properly set.	Adjust U071 [Back].	

(2-11)Vertical streaks, band (white)

(When scanning the front side through DP, or scanning the back side through the mechanically reversed DP)

Step	Check description	Assumed cause	Measures	Reference
1	Replacing the original	The original is dirty.	Replace the original.	
2	Cleaning the contact glass and DP conveying guide	The slit glass or the DP conveying guide is dirty.	Clean the slit glass and DP conveying guide.	
3	Cleaning the mirror	The mirror is dirty.	Clean the mirror in the lamp unit.	
4	Checking the lamp unit	The dust is adhered on the lamp unit.	Remove dust inside the laser path of the lamp unit.	
5	Checking the lens cover	The lens cover is off.	Reattach the lens cover.	
6	Checking the shading plate	The shading plate at the backside of the contact glass is dirty.	Clean the shading plate.	
7	Checking the connection	FFC is not connected properly. Or it is faulty.	Clean the FFC terminals of the following FFC and reconnect them. If the FFC terminal is deformed or broken,replace the FFC. • Image sensor PWB - Main PWB	
8	Replacing the lens unit	The image sensor PWB is faulty.	Replace the lens unit.	
9	Replacing the main PWB	The main PWB is faulty.	Replace the main PWB.	

(2-12)Moire (front side)

(When scanning the front side through DP)

Step	Check description	Assumed cause	Measures	Reference
1	Changing the setting	The original image quality is not set properly. (Moire changes depending on the image quality.)	Set [Original Image] the original quarity fitting the original type in the system menu.	
2	Reloading the original	The original is not set properly. (Moire appears in the original scanning direction.)	Rotate the originals in 90 degrees and reset them.	
3	Executing U065	The ratio in the main scanning direction is large.	Change the magnification in the main scanning direction to reduction at U65 [Main Scan]	

(2-13)Moire (back side)

Target: Reverse automatic DP

(When scanning the back side through the mechanically reversed DP)

Step	Check description	Assumed cause	Measures	Reference
1	Changing the setting	The original image quality is not set properly. (Moire changes depending on the image quality.)	Set [Original Image] the original quarity fitting the original type in the system menu.	
2	Reloading the original	The original is not set properly. (Moire appears in the original scanning direction.)	Rotate the originals in 90 degrees and reset them.	

(2-14)Missing entire image (White / Black)

(When scanning the front side through DP, or scanning the back side through the mechanically reversed DP)

Step	Check description	Assumed cause	Measures	Reference
1	Reloading the original	The originals were set upside down.	Reset the original to correct the front and back direction.	
2	Executing U068	The starting position for scanning an original on the DP is incorrect.	Adjust U068 [DP Read].	
3	Checking the scanner drive belt	The scanner drive belt comes off.	Reattach the scanner drive belt.	
4	Checking the scanner drive gear	The scanner drive gear is not properly attached.	Reattach the scanner drive gear connecting to the front cover for the maintenance.	
5	Checking the home position sensor	The home position sensor is not properly attached.	Reattach the home position sensor.	
6	Checking the connection	FFC is not connected properly. Or,FFC is faulty.	Clean and reconnect the FFC. If the FFC terminal section is deformed or FFC is broken,replace the FFC. • Image sensor PWB - Main PWB • Engine PWB - Main PWB	
7	Replacing the lens unit	The image sensor PWB is faulty.	Replace the lens unit.	
8	Replacing the engine PWB	The engine PWB is faulty.	Replace the engine PWB.	
9	Replacing the main PWB	The main PWB is faulty.	Replace the main PWB.	

(2-15)Image is dark partly or light

(When scanning the front side through DP, or scanning the back side through the mechanically reversed DP)

Step	Check description	Assumed cause	Measures	Reference
1	Checking the original	The original is bent, wavy or warped.	Check the original.If it is bent, stretch fold of the original.	
2	Checking the table scanning	The table scanning of originals is faulty.	Check if the same phenomenon occurs when scanning on the contact glass. If it occurs,perform the field measures for the same phenomenon that occurs when scanning on the contact glass.	
3	Checking the slit glass	The slit glass is dirty,or it is bent.	Clean the slit glass. If slit glass is bent,replace it.	
4	Checking the DP scanning guide	DP scanning guide is not installed properly.	Reattach the DP scanning guide.	

(2-16)Blurred image

(When scanning the front side through DP, or scanning the back side through the mechanically reversed DP)

Step	Check description	Assumed cause	Measures	Reference
1	Checking the original	The original is wavy.	Make the originals flat,or replace it if possible.	
2	Checking the slit glass	The slit glass has condensation.	Remove condensation on the slit glass.	
3	Checking the mirror	The mirror has condensation.	Remove the condensation on the mirror in the lamp unit.	
4	Checking the lens	The lens has condensation.	Remove the condensation on the lens in the lens unit.	
5	Checking the glass of the Image sensor PWB.	The glass of the Image sensor PWB has condensation.	Remove the condensation on the Image sensor PWB glass using a blower brush	
6	Executing U411	Each auto adjustment of the scanner is incorrect.	Execute U411 [Table(ChartA)].	
7	Checking the connection	FFC is not connected properly. Or,FFC is faulty.	Clean and reconnect the FFC. If the FFC terminal section is deformed or FFC is broken,replace the FFC. • Image sensor PWB - Main PWB • Engine PWB - Main PWB	
8	Replacing the lens unit	The image sensor PWB is faulty.	Replace the lens unit.	
9	Replacing the engine PWB	The engine PWB is faulty.	Replace the engine PWB.	
10	Replacing the main PWB	The main PWB is faulty.	Replace the main PWB.	

(2-17)Image is missing partly

(When scanning the front side through DP, or scanning the back side through the mechanically reversed DP)

Step	Check description	Assumed cause	Measures	Reference
1	Reloading the original	The original is not set properly.	Reset the originals.	
2	Changing the setting	The original size and the paper side do not match on the operation panel. (The setting is incorrect.)	Set [Original Size] in the System Menu.	
3	Checking the automatic rotation function	The copy position is rotated automatically.	Set [Auto Image Rotation] to [Off] from the system menu.	
4	Changing the Border Erase function	The Border Erase function is not properly set. (Setting is too large.)	Lower the setting of the Border Erase in the System Menu.	
5	Cleaning the slit glass	The slit glass is dirty.	Clean the slit glass.	
6	Checking the slit glass	The slit glass is not properly attached.	Reattach the slit glass.	
7	Checking the connection	FFC is not connected properly. Or,FFC is faulty.	Clean and reconnect the FFC. If the FFC terminal section is deformed or FFC is broken,replace the FFC. • Image sensor PWB - Main PWB • Engine PWB - Main PWB	
8	Replacing the lens unit	The lens unit is not properly attached or the image sensor PWB is faulty.	Reinstall the lens unit.If not resolved,replace the lens unit.	
9	Replacing the engine PWB	The engine PWB is faulty.	Replace the engine PWB.	
10	Replacing the main PWB	The main PWB is faulty.	Replace the main PWB.	

(2-18)Color shift

(When scanning the front side through DP, or scanning the back side through the mechanically reversed DP)

Step	Check description	Assumed cause	Measures	Reference
1	Checking the original	The originals out of specification are used. (They are thick,thin,or smooth.)	Ask a user to use the specified paper.	
2	Correcting the original	The leading edge of the original is bent.	Stretch the bending or the paper creases of the original.	
3	Cleaning the DP conveying roller and the bushings	The DP conveying roller or the bushing is dirty.	Clean the DP conveying roller and bushing.	
4	Checking the DP conveying pulley and the pressure spring	The original conveying pulley does not rotate smoothly.	Reattach the DP conveying pulleys and the pressure springs.	
5	Checking the DP drive parts	The DP drive parts are not properly attached.	Reattach the DP drive parts.	
6	Replacing the DP scanning guide	The DP scanning guide is deformed.	Replace the DP scanning guide.	
7	Checking the original pick-up guide	The original pick-up guide does not operate properly.	Reattach the original pick-up guide.	
8	Adjusting the left DP hinge height	The front and rear heights of the DP do not match.	Adjust the left DP hinge height.	
9	Checking the DP	The document processor is not properly installed in the main unit.	Check the positioning of the document processor and tighten the screws again.	
10	Replacing the DP hinges	DP hinge is faulty. (The DP hinge does not operate smoothly in the up and down direction,and the right and left sides of the DP are distorted because the DP can not hold the opened condition.)	Replace the DP hinges.	

(2-19)Skewed image

(When scanning the front side through DP, or scanning the back side through the mechanically reversed DP)

Step	Check description	Assumed cause	Measures	Reference
1	Correcting the original	The originals are bent or creased.	Stretch the bending or the paper creases of the original.	
2	Checking the original width guides	The original skews.	Relocate the original width guides.	
3	Adjusting the right DP hinge position	The right DP hinge position is not adjusted back and forth.	Adjust the right DP hinge position back and forth.	
4	Cleaning the DP feed roller	The DP feed roller is dirty. (It can be removed by cleaning.)	Clean the DP feed roller.	
5	Replacing the DP feed roller	The DP feed roller is dirty. (It cannot be removed by cleaning.)	Replace the DP feed roller.	
6	Cleaning the DP registration roller	The DP registration roller is dirty.	Clean the DP registration roller.	
7	Checking the DP registration pulley	The operation of the DP registration pulley is faulty.	Reattach the DP registration pulley.	
8	Executing U942	The original loop amount is improper.	Adjust the original loop amount at U942.	

(2-20)Entire image is light

(When scanning the front side through DP, or scanning the back side through the mechanically reversed DP)

Step	Check description	Assumed cause	Measures	Reference
1	Checking the table scanning	The table scanning of originals is faulty.	Check if the same phenomenon occurs when scanning on the contact glass. If it occurs,perform the field measures for the same phenomenon that occurs when scanning on the contact glass.	
2	Executing U068	The starting position for scanning an original on the DP is incorrect.	Adjust U068 [DP Read].	
3	Cleaning the contact glass and DP conveying guide	The slit glass or the DP conveying guide is dirty.	Clean the slit glass and DP conveying guide.	
4	Checking the slit glass	The slit glass is not properly attached.	Reattach the slit glass.	
5	Changing the setting	The density is not properly adjusted. (The original type and image quality differs.)	Set [Original Image] the original quarity fitting the original type in the system menu.	
6	Changing the setting	The density is not properly adjusted. ([EcoPrint] is set to "On".)	Set [EcoPrint] to [Off] in the system menu.	
7	Changing the setting	The density is not properly adjusted. (The density setting is too light.)	Set the density setting to be dark in the system menu.	
8	Changing the setting	The density is not properly adjusted. ([Background density] is set to "Off".)	Set [Manual] for [Background Density Adjustment] in the system menu and adjust the background image density.	
9	Changing the setting	[Prevent Bleed-thru] setting is [On]	Chenge [Prevent Bleed-thru] setting is [Off] in the system menu.	
10	Cleaning the shading plate	The shading plate is dirty.	Clean the shading plate at the backside of the contact glass.	
11	Executing U411	The scanner image is not adjusted.	Execute U411 [DP FU(ChartA)].	
12	Checking the connection	FFC is not connected properly. Or,FFC is faulty.	Clean and reconnect the FFC. If the FFC terminal section is deformed or FFC is broken,replace the FFC. • Image sensor PWB - Main PWB • Engine PWB - Main PWB	
13	Replacing the lens unit	The image sensor PWB is faulty.	Replace the lens unit.	
14	Replacing the engine PWB	The engine PWB is faulty.	Replace the engine PWB.	
15	Replacing the main PWB	The main PWB is faulty.	Replace the main PWB.	

(3)Scanner Factors (Dual scan DP: When scanning the back side through DP)

No.	Contents	Image sample
(3-1)	Abnormal image (page 7-18)	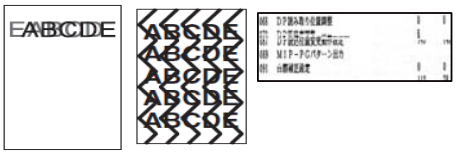
(3-2)	Colored background (page 7-18)	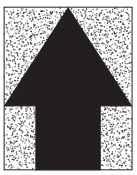
(3-3)	Black or color spots (page 7-19)	
(3-4)	Mismatch between the center of the original and the center of the copy image (page 7-19)	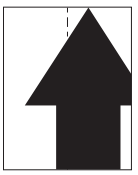
(3-5)	Horizontal black streaks (page 7-19)	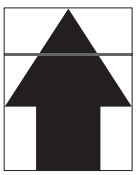
(3-6)	Vertical streaks, band (black or color) (page 7-20)	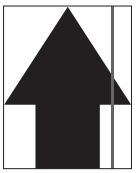
(3-7)	Regular difference of the leading edge on the original image and copy image (page 7-20)	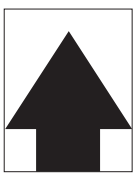
(3-8)	Vertical streaks, band (white) (page 7-21)	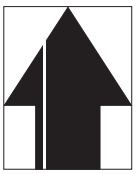

No.	Contents	Image sample
(3-9)	Moire (page 7-21)	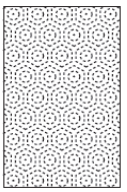
(3-10)	Missing entire image (White / Black) (page 7-22)	
(3-11)	Image is dark partly or light (page 7-22)	
(3-12)	Blurred image (page 7-23)	
(3-13)	Image is missing partly (page 7-23)	
(3-14)	Color shift (page 7-24)	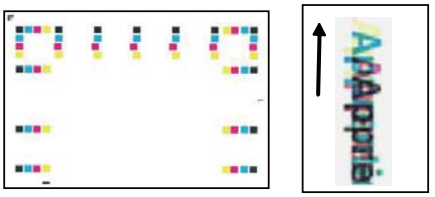
(3-15)	Skewed image (page 7-24)	
(3-16)	Entire image is light (page 7-25)	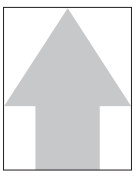

Content of Scanner Factors (when scanning from DP)

(3-1)Abnormal image

(Scanning the second side (back side) through the dual scan DP)

Step	Check description	Assumed cause	Measures	Reference
1	Checking the connection	The SATA cable is not properly connected,or it is faulty.	Clean the terminal of the following SATA cable connectors and reconnect the connectors. If there is no continuity,replace the SATA cable. • DP SHD PWB - DP relay PWB	
2	Checking the DP relay PWB	The DP relay PWB is not attached properly,or it is faulty.	The DP relay PWB is not attached properly,or it is faulty.	
3	Checking the DPSHD PWB	The DPSHD PWB is not properly connected or faulty.	Reconnect the DPSHD PWB to the DPCIS.If not resolved,replace the DPSHD PWB.	
4	Checking the DPCIS	The DPCIS is not properly attached,or it is faulty.	Reinstall the DPCIS.If not resolved,replace the DPCIS.	
5	Replacing the main PWB	The main PWB is faulty.	Replace the main PWB.	

(3-2)Colored background

(Scanning the second side (back side) through the dual scan DP)

Step	Check description	Assumed cause	Measures	Reference
1	Setting Background Density Adjustment	The original background density is dark. The background density adjustment is set to [Off].	Set [Auto] for [Background Density Adjustment] in the system menu.	
2	Setting Background Density Adjustment	The original background density is dark. The background density adjustment is dark.	Set [Manual] for [Background Density Adjustment] in the system menu and adjust the background image density.	
3	Executing U411	The CIS image adjustment (U411 [DP FD(ChartA)]) is not executed.	Execute U411 [DP FD(ChartA)].	
4	Checking the DPCIS roller.	The DPCIS roller is dirty.	Clean the DPCIS roller.	
5	Checking the DPCIS roller drive section.	The DPCIS roller does not rotate properly.	Reattach the DPCIS roller driving section.	
6	Checking the connection	The SATA cable is not properly connected,or it is faulty.	Clean the terminal of the following SATA cable connectors and reconnect the connectors. If there is no continuity,replace the SATA cable. • DP SHD PWB - DP relay PWB	
7	Checking the DP relay PWB	The DP relay PWB is not attached properly,or it is faulty.	Reinstall the DP relay PWB.If not resolved,replace the DP relay PWB.	
8	Checking the DPSHD PWB	The DPSHD PWB is not properly connected or faulty.	Reconnect the DPSHD PWB to the DPCIS.If not resolved,replace the DPSHD PWB.	
9	Checking the DPCIS	The DPCIS is not properly attached,or it is faulty.	Reinstall the DPCIS.If not resolved,replace the DPCIS.	
10	Replacing the main PWB	The main PWB is faulty.	Replace the main PWB.	

(3-3)Black or color spots

(Scanning the second side (back side) through the dual scan DP)

Step	Check description	Assumed cause	Measures	Reference
1	Replacing the original	The original is dirty.	Replace the original.	
2	Checking the connection	The SATA cable is not properly connected,or it is faulty.	Clean the terminal of the following SATA cable connectors and reconnect the connectors. If there is no continuity,replace the SATA cable. • DP SHD PWB - DP relay PWB	
3	Checking the DP relay PWB	The DP relay PWB is not attached properly,or it is faulty.	Reinstall the DP relay PWB.If not resolved,replace the DP relay PWB.	
4	Checking the DPSHD PWB	The DPSHD PWB is not properly connected or faulty.	Reconnect the DPSHD PWB to the DPCIS.If not resolved,replace the DPSHD PWB.	
5	Checking the DPCIS	The DPCIS is not properly attached,or it is faulty.	Reinstall the DPCIS.If not resolved,replace the DPCIS.	
6	Replacing the main PWB	The main PWB is faulty.	Replace the main PWB.	

(3-4)Mismatch between the center of the original and the center of the copy image

(Scanning the second side (back side) through the dual scan DP)

Step	Check description	Assumed cause	Measures	Reference
1	Reloading the original	The originals are not properly set on the original tray.	Reload the original properly.	
2	Executing U072	The DP scanning position is not adjusted.	Adjust the DPCIS center line by executing U072 [CIS].	
3	Executing U411	The DP scanning position is not adjusted.	Execute U411 [DP Auto Adj].	
4	Executing U411	The DP scanning position is not adjusted.	Execute U411 [DP FD(ChartA)].	

(3-5)Horizontal black streaks

(Scanning the second side (back side) through the dual scan DP)

Step	Check description	Assumed cause	Measures	Reference
1	Replacing the original	The original is dirty.	Replace the original.	
2	Cleaning the DPCIS glass and the DP conveying guide	The DPCIS glass is dirty.	Clean the DPCIS glass and the DP conveying guide.	
3	Checking the connection	The SATA cable is not properly connected,or it is faulty.	Clean the terminal of the following SATA cable connectors and reconnect the connectors. If there is no continuity,replace the SATA cable. • DP SHD PWB - DP relay PWB	
4	Checking the DP relay PWB	The DP relay PWB is not attached properly,or it is faulty.	Reinstall the DP relay PWB.If not resolved,replace the DP relay PWB.	
5	Checking the DPSHD PWB	The DPSHD PWB is not properly connected or faulty.	Reconnect the DPSHD PWB to the DPCIS.If not resolved,replace the DPSHD PWB.	
6	Checking the DPCIS	The DPCIS is not properly attached,or it is faulty.	Reinstall the DPCIS.If not resolved,replace the DPCIS.	
7	Replacing the main PWB	The main PWB is faulty.	Replace the main PWB.	

(3-6)Vertical streaks, band (black or color)

(Scanning the second side (back side) through the dual scan DP)

Step	Check description	Assumed cause	Measures	Reference
1	Executing U072	The leading edge timing is improperly adjusted. (Streaks or bands appear on the image outside the original.)	Adjust U072 [CIS].	
2	Executing U411	The leading edge timing is improperly adjusted. (Streaks or bands appear on the image outside the original.)	Execute U411 [DP Auto Adj].	
3	Executing U411	The leading edge timing is improperly adjusted. (Streaks or bands appear on the image outside the original.)	Execute U411 [DP FD(ChartA)].	
4	Cleaning the DPCIS glass and the DP conveying guide	The DPCIS glass is dirty.	Clean the DPCIS glass and the DP conveying guide.	
5	Cleaning the DP conveying guide.	The DP conveying guide is dirty.	Clean the DP conveying guide.	
6	Checking the DP registration pulley	The DP registration pulley is dirty.	Clean the DP registration pulley.	
7	Checking the DPCIS roller.	The DPCIS roller is dirty.	Clean the DPCIS roller.	
8	Executing U091	White line correction is not executed.	U091 [Mode] (Set white line Correction) to [1] (with correction)	
9	Checking the connection	The SATA cable is not properly connected,or it is faulty.	Clean the terminal of the following SATA cable connectors and reconnect the connectors. If there is no continuity,replace the SATA cable. • DP SHD PWB - DP relay PWB	
10	Checking the DP relay PWB	The DP relay PWB is not attached properly,or it is faulty.	Reinstall the DP relay PWB.If not resolved,replace the DP relay PWB.	
11	Checking the DPSHD PWB	The DPSHD PWB is not properly connected or faulty.	Reconnect the DPSHD PWB to the DPCIS.If not resolved,replace the DPSHD PWB.	
12	Checking the DPCIS	The DPCIS is not properly attached,or it is faulty.	Reinstall the DPCIS.If not resolved,replace the DPCIS.	
13	Replacing the main PWB	The main PWB is faulty.	Replace the main PWB.	

(3-7)Regular difference of the leading edge on the original image and copy image

(Scanning the second side (back side) through the dual scan DP)

Step	Check description	Assumed cause	Measures	Reference
1	Executing U072	The DP scanning position is not adjusted.	Adjust the DPCIS center line by executing U072 [CIS].	
2	Executing U411	The DP scanning position is not adjusted.	Execute U411 [DP Auto Adj].	
3	Executing U411	The DP scanning position is not adjusted.	Execute U411 [DP FD(ChartA)].	

(3-8)Vertical streaks, band (white)

(Scanning the second side (back side) through the dual scan DP)

Step	Check description	Assumed cause	Measures	Reference
1	Replacing the original	The original is dirty.	Replace the original.	
2	Checking the DPCIS roller.	The DPCIS roller is dirty.	Clean the DPCIS roller.	
3	Cleaning the DPCIS glass and the DP conveying guide	The DPCIS glass is dirty.	Clean the DPCIS glass and the DP conveying guide.	
4	Executing U091	White line correction is not executed.	U091 [Mode] (Set white line Correction) to [1] (with correction)	
5	Checking the connection	The SATA cable is not properly connected,or it is faulty.	Clean the terminal of the following SATA cable connectors and reconnect the connectors. If there is no continuity,replace the SATA cable. • DP SHD PWB - DP relay PWB	
6	Checking the DP relay PWB	The DP relay PWB is not attached properly,or it is faulty.	Reinstall the DP relay PWB.If not resolved,replace the DP relay PWB.	
7	Checking the DPSHD PWB	The DPSHD PWB is not properly connected or faulty.	Reconnect the DPSHD PWB to the DPCIS.If not resolved,replace the DPSHD PWB.	
8	Checking the DPCIS	The DPCIS is not properly attached,or it is faulty.	Reinstall the DPCIS.If not resolved,replace the DPCIS.	
9	Replacing the main PWB	The main PWB is faulty.	Replace the main PWB.	

(3-9)Moire

(Scanning the second side (back side) through the dual scan DP)

Step	Check description	Assumed cause	Measures	Reference
1	Changing the setting	The image quality is not set properly. (Moire changes depending on the image quality.)	Change the image quality in the system menu.	
2	Reloading the original	The original is not set properly. (Moire appears in the original scanning direction.)	Rotate the originals in 90 degrees and reset them.	
3	Executing U065	The ratio in the main scanning direction is large.	Change the magnification in the main scanning direction to reduction at U65 [Main Scan]	
4	Executing U411	The automatic scanner adjustment is not executed.	Execute U411 [DP FD(ChartA)].	

(3-10)Missing entire image (White / Black)

(Scanning the second side (back side) through the dual scan DP)

Step	Check description	Assumed cause	Measures	Reference
1	Checking the connection	The SATA cable is not properly connected,or it is faulty.	Clean the terminal of the following SATA cable connectors and reconnect the connectors. If there is no continuity,replace the SATA cable. • DP SHD PWB - DP relay PWB	
2	Checking the DP relay PWB	The DP relay PWB is not attached properly,or it is faulty.	Reinstall the DP relay PWB.If not resolved,replace the DP relay PWB.	
3	Checking the DPSHD PWB	The DPSHD PWB is not properly connected or faulty.	Reconnect the DPSHD PWB to the DPCIS.If not resolved,replace the DPSHD PWB.	
4	Checking the DPCIS	The DPCIS is not properly attached,or it is faulty.	Reinstall the DPCIS.If not resolved,replace the DPCIS.	
5	Replacing the main PWB	The main PWB is faulty.	Replace the main PWB.	

(3-11)Image is dark partly or light

(Scanning the second side (back side) through the dual scan DP)

Step	Check description	Assumed cause	Measures	Reference
1	Changing the setting	The original image quality is not set properly. (The original type and image quality differs.)	Set [Original Image] the original quarity fitting the original type in the system menu.	
2	Replacing the original	The original is dirty.	Replace the original.	
3	Correcting the original	The originals are bent or creased.	Stretch the fold or creases of the original.	
4	Checking the DPCIS roller drive section.	The DPCIS roller does not rotate properly.	Reattach the DPCIS roller driving section.	
5	Cleaning the DPCIS glass and the DP conveying guide	The DPCIS glass is dirty.	Clean the DPCIS glass and the DP conveying guide.	
6	Checking the connection	The SATA cable is not properly connected,or it is faulty.	Clean the terminal of the following SATA cable connectors and reconnect the connectors. If there is no continuity,replace the SATA cable. • DP SHD PWB - DP relay PWB	
7	Checking the DP relay PWB	The DP relay PWB is not attached properly,or it is faulty.	Reinstall the DP relay PWB.If not resolved,replace the DP relay PWB.	
8	Checking the DPSHD PWB	The DPSHD PWB is not properly connected or faulty.	Reconnect the DPSHD PWB to the DPCIS.If not resolved,replace the DPSHD PWB.	
9	Checking the DPCIS	The DPCIS is not properly attached,or it is faulty.	Reinstall the DPCIS.If not resolved,replace the DPCIS.	
10	Replacing the main PWB	The main PWB is faulty.	Replace the main PWB.	

(3-12)Blurred image

(Scanning the second side (back side) through the dual scan DP)

Step	Check description	Assumed cause	Measures	Reference
1	Executing U411	The automatic scanner adjustment is not executed.	Execute U411 [DP FD(ChartA)].	
2	Checking the DPCIS glass	The DPCIS glass has condensation.	Remove condensation on the DPCIS glass.	
3	Cleaning the DPCIS glass and the DP conveying guide	The DPCIS glass is dirty.	Clean the DPCIS glass and the DP conveying guide.	
4	Checking the DPCIS glass	The DPCIS glass is warped.Or,it has some scratches.	Reinstall the DPCIS glass.If not resolved,replace the DPCIS glass.	
5	Checking the DPCIS roller drive section.	The DPCIS roller does not rotate properly.	Reattach the DPCIS roller driving section.	
6	Checking the DPCIS	The DPCIS is not properly attached,or it is faulty.	Reinstall the DPCIS.If not resolved,replace the DPCIS.	

(3-13)Image is missing partly

(Scanning the second side (back side) through the dual scan DP)

Step	Check description	Assumed cause	Measures	Reference
1	Reloading the original	The originals are not properly set on the original tray.	Reload the original properly.	
2	Changing the setting	Actual original size and detected original size are mismatched.	Set [Original Size] in the System Menu.	
3	Changing the setting	The copy position is rotated automatically.	Set [Auto Image Rotation] to [Off] from the system menu.	
4	Changing the setting	The Border Erase function is not properly set. (Setting is too large.)	Lower the setting of the Border Erase in the System Menu.	
5	Checking the connection	The SATA cable is not properly connected,or it is faulty.	Clean the terminal of the following SATA cable connectors and reconnect the connectors. If there is no continuity,replace the SATA cable. • DP SHD PWB - DP relay PWB	
6	Checking the DP relay PWB	The DP relay PWB is not attached properly,or it is faulty.	Reinstall the DP relay PWB.If not resolved,replace the DP relay PWB.	
7	Checking the DPSHD PWB	The DPSHD PWB is not properly connected or faulty.	Reconnect the DPSHD PWB to the DPCIS.If not resolved,replace the DPSHD PWB.	
8	Checking the DPCIS	The DPCIS is not properly attached,or it is faulty.	Reinstall the DPCIS.If not resolved,replace the DPCIS.	
9	Replacing the main PWB	The main PWB is faulty.	Replace the main PWB.	

(3-14)Color shift

(Scanning the second side (back side) through the dual scan DP)

Step	Check description	Assumed cause	Measures	Reference
1	Checking the first side scanning through DP	There is a factor in the original feeding.	Check if the same phenomenon occurs when scanning the front side through DP. If it occurs,perform the field measures for the same phenomenon that occurs when scanning the front side through DP.	
2	Checking the DPCIS roller.	The originals are conveyed without contacting the DPCIS roller.	Reattach the DPCIS roller.	
3	Checking the DP conveying roller	The DP conveying roller is dirty.	Clean the front/back of the DP scanning section for the DP conveying roller and the bushing.	
4	Checking the DPCIS	The DPCIS is not properly attached.	Reattach the DPCIS.	

(3-15)Skewed image

(Scanning the second side (back side) through the dual scan DP)

Step	Check description	Assumed cause	Measures	Reference
1	Checking the first (front) side DP scanning	There is a factor in the original feeding.	Check if the same phenomenon occurs when scanning the front side through DP. If it occurs,perform the field measures for the same phenomenon that occurs when scanning the front side through DP.	
2	Checking the DPCIS	The DPCIS is not properly attached.	Reattach the DPCIS.	
3	Checking the DPCIS roller.	The DPCIS roller is dirty.	Clean the DPCIS roller.	
4	Executing U075	Slant correction function setting is not set.	Execute U075 and change the setting [On/Off Config] On at the Slant correction function.	

(3-16)Entire image is light

(Scanning the second side (back side) through the dual scan DP)

Step	Check description	Assumed cause	Measures	Reference
1	Changing the setting	The density is not properly adjusted. (The original type and image quality differs.)	Set [Original Image] the original quarity fitting the original type in the system menu.	
2	Changing the setting	The density is not properly adjusted. ([EcoPrint] is set to "On".)	Set [EcoPrint] to [Off] in the system menu.	
3	Changing the setting	The density is not properly adjusted. (The density setting is too light.)	Set the density setting to be dark in the system menu.	
4	Changing the setting	The density is not properly adjusted. ([Background density] is set to "Off".)	Set [Manual] for [Background Density Adjustment] in the system menu and adjust the background image density.	
5	Executing U411	U411 [DP FD(ChartA)] is not executed.	Execute U411 [DP FD(ChartA)].	
6	Checking the DPCIS roller.	The DPCIS roller is dirty.	Clean the DPCIS roller.	
7	Checking the DPCIS roller drive section.	The DPCIS roller does not rotate properly.	Reattach the DPCIS roller driving section.	
8	Checking the DP slit glass	The DP slit glass is not properly attached.	Reattach the DP slit glass.	
9	Checking the connection	The SATA cable is not properly connected,or it is faulty.	Clean the terminal of the following SATA cable connectors and reconnect the connectors. If there is no continuity,replace the SATA cable. • DP SHD PWB - DP relay PWB	
10	Checking the DP relay PWB	The DP relay PWB is not attached properly,or it is faulty.	Reinstall the DP relay PWB.If not resolved,replace the DP relay PWB.	
11	Checking the DPSHD PWB	The DPSHD PWB is not properly connected or faulty.	Reconnect the DPSHD PWB to the DPCIS.If not resolved,replace the DPSHD PWB.	
12	Checking the DPCIS	The DPCIS is not properly attached,or it is faulty.	Reinstall the DPCIS.If not resolved,replace the DPCIS.	
13	Replacing the main PWB	The main PWB is faulty.	Replace the main PWB.	

(4)Scanner Factors (when scanning on the contact glass)

No.	Contents	Image sample
(4-1)	Abnormal image (page 7-28)	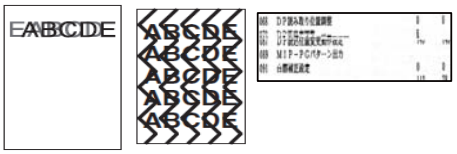
(4-2)	Colored background (page 7-28)	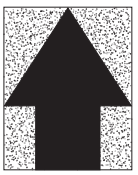
(4-3)	Black or color spots (page 7-29)	
(4-4)	Blurred characters / Color Shift (page 7-29)	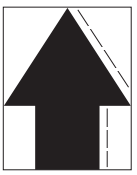
(4-5)	Mismatch between the center of the original and the center of the copy image (page 7-29)	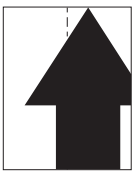
(4-6)	Horizontal black streaks (page 7-30)	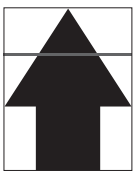
(4-7)	Vertical streaks, band (black or color) (page 7-30)	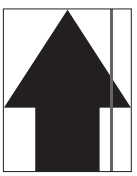
(4-8)	Regular difference of the leading edge on the original image and copy image (page 7-31)	

No.	Contents	Image sample
(4-9)	Vertical streaks, band (white) (page 7-31)	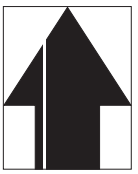
(4-10)	Moire (page 7-32)	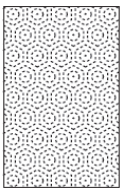
(4-11)	No image comes out (White or Black) (page 7-32)	
(4-12)	Image is dark partly or light (page 7-33)	
(4-13)	Blurred image (page 7-34)	
(4-14)	Image is missing partly (page 7-35)	
(4-15)	Skewed image (page 7-35)	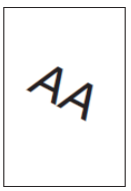
(4-16)	Entire image is light (page 7-36)	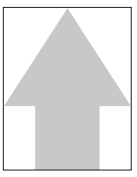

Content of Scanner Factors (when scanning on the contact glass)

(4-1)Abnormal image

Step	Check description	Assumed cause	Measures	Reference
1	Checking the connection	The connector or the FFC is not connected properly. Or,the wire,FFC,the cable is faulty.	Reconnect the wire/cable connectors. Clean and reconnect the FFC. If there is no continuity,replace the wire/cable.If the FFC terminal section is deformed or FFC is broken,replace the FFC. • Image sensor PWB - Main PWB • Engine PWB - Main PWB • HDD - Main PWB	
2	Replacing the HDD	The HDD is faulty.	Replace the HDD.	
3	Replacing the lens unit	The image sensor PWB is faulty.	Replace the lens unit.	
4	Replacing the engine PWB	The engine PWB is faulty.	Replace the engine PWB.	
5	Replacing the main PWB	The main PWB is faulty.	Replace the main PWB.	

(4-2)Colored background

Step	Check description	Assumed cause	Measures	Reference
1	Changing the setting	The Background Density Adjustment is not set.	Set [Auto] for [Background Density Adjustment] in the system menu.	
2	Changing the setting	The original background density is dark. The background density adjustment is dark.	Set [Manual] for [Background Density Adjustment] in the system menu and adjust the background image density.	
3	Checking the original	The original is raised at scanning.	Set the original during pressing.	
4	Executing U411	The image is not adjusted.	Execute U411 [Table(ChartA)].	
5	Checking the home position sensor	The home position sensor is not properly attached.	Reattach the home position sensor.	
6	Checking the connection	The connector or FFC is not properly connected,or the wire or FFC is faulty.	Reconnect the following wire connectors and reconnect the FFC. If there is no continuity,replace the wire. If the FFC terminal section is deformed or FFC is broken,replace the FFC. • Image sensor PWB - Main PWB • Engine PWB - Main PWB • Home Position sensor - Engine PWB • LED Drive PWB - Image sensor PWB	
7	Checking the lamp unit	The lamp unit is not attached properly.	Reattach the lamp unit.	
8	Checking the lens unit	The lens unit is not attached properly.	Reattach the lens unit.	
9	Replacing the lamp unit	The LED drive PWB is faulty.	Replace the lamp unit.	
10	Replacing the lens unit	The image sensor PWB is faulty.	Replace the lens unit.	
11	Replacing the engine PWB	The engine PWB is faulty.	Replace the engine PWB.	
12	Replacing the main PWB	The main PWB is faulty.	Replace the main PWB.	

(4-3)Black or color spots

Step	Check description	Assumed cause	Measures	Reference
1	Checking the original	The original is dirty.	Replace the original.	
2	Cleaning the contact glass	The contact glass is dirty.	Clean the contact glass.	
3	Checking the connection	FFC is not connected properly. Or,FFC is faulty.	Clean and reconnect the FFC. If the FFC terminal section is deformed or FFC is broken,replace the FFC. • Image sensor PWB - Main PWB • Engine PWB - Main PWB	
4	Replacing the lens unit	The image sensor PWB is faulty.	Replace the lens unit.	
5	Replacing the engine PWB	The engine PWB is faulty.	Replace the engine PWB.	
6	Replacing the main PWB	The main PWB is faulty.	Replace the main PWB.	

(4-4)Blurred characters / Color Shift

Step	Check description	Assumed cause	Measures	Reference
1	Checking the lamp unit	The lamp unit is not attached properly.	Reattach the lamp unit.	
2	Checking the belt tension	A load is applied to the scanner movement since the belt tension is improper.	Adjust the scanner motor belt tension properly.	
3	Removing foreign material	The foreign objects adhere on the scanner wire drum.	Remove the foreign objects on the scanner wire drums.	
4	Removing foreign material	The foreign objects adhere on the pulley groove.	Remove the foreign objects on the pulley of the lamp unit assy.	
5	Checking the scanner wires	The scanner wire is dirty or dropped out.	Clean the scanner wire or reattach it.	
6	Replacing the scanner wire	There are scratches on the scanner wire.	Replace the scanner wires.	

(4-5)Mismatch between the center of the original and the center of the copy image

Step	Check description	Assumed cause	Measures	Reference
1	Checking the original	The original is not properly set on the contact glass.	Reset the originals.	
2	Checking the contact glass	The contact glass is not properly attached.	Reattach the contact glass.	
3	Executing U067	The scanner center line is not adjusted.	Adjust U067 [Front].	
4	Executing U411	The automatic table scanning adjustment is not executed.	Execute U411 [Table(ChartA)].	

(4-6)Horizontal black streaks

Step	Check description	Assumed cause	Measures	Reference
1	Checking the original	The original is dirty.	Replace the original.	
2	Cleaning the contact glass	The contact glass is dirty.	Clean the contact glass.	
3	Executing U411	The image at the backside of the size indication plate is scanned. (The adjustment value of [Table(ChartA)] at U411 is incorrect.)	Execute U411 [Table(ChartA)].	
4	Checking the connection	FFC is not connected properly. Or,FFC is faulty.	Clean and reconnect the FFC. If the FFC terminal section is deformed or FFC is broken,replace the FFC. • Image sensor PWB - Main PWB • Engine PWB - Main PWB	
5	Replacing the lens unit	The image sensor PWB is faulty.	Replace the lens unit.	
6	Replacing the engine PWB	The engine PWB is faulty.	Replace the engine PWB.	
7	Replacing the main PWB	The main PWB is faulty.	Replace the main PWB.	

(4-7)Vertical streaks, band (black or color)

Step	Check description	Assumed cause	Measures	Reference
1	Checking the original	The original is dirty.	Replace the original.	
2	Changing the setting	Actual original size and detected original size are mismatched.	Set the original paper size.	
3	Cleaning the platen cover	The original cover is dirty.	Clean the original cover.	
4	Executing U067	The center line settings are incorrect. (The streaks or bands appear out of the original image.)	Adjust U067 [Front].	
5	Executing U411	The leading edge timing is incorrect. (Streaks or bands appear out of the original.)	Execute U411 [Table(ChartA)].	
6	Cleaning the contact glass	The contact glass or the shading plate at the backside of the contact glass is dirty.	Clean the contact glass and the shading plate at the backside of the contact glass.	
7	Cleaning the mirror	The mirror is dirty.	Clean the mirror in the lamp unit.	
8	Checking the lamp unit	The dust is adhered on the lamp unit.	Remove dust inside the laser path of the lamp unit.	
9	Cleaning the Image sensor PWB	Dust is on the Image sensor PWB.	Clean the Image sensor PWB using an air-blower.	
10	Checking the connection	FFC is not connected properly. Or,FFC is faulty.	Clean and reconnect the FFC. If the FFC terminal section is deformed or FFC is broken,replace the FFC. • Image sensor PWB - Main PWB • Engine PWB - Main PWB	
11	Replacing the lens unit	The image sensor PWB is faulty.	Replace the lens unit.	
12	Replacing the engine PWB	The engine PWB is faulty.	Replace the engine PWB.	
13	Replacing the main PWB	The main PWB is faulty.	Replace the main PWB.	

(4-8)Regular difference of the leading edge on the original image and copy image

Step	Check description	Assumed cause	Measures	Reference
1	Checking the original	The original is not set properly. (The leading edge of the original is not set on the contact glass properly)	Reset the originals.	
2	Executing U066	The scanner leading edge timing is incorrect	Adjust U066 [Front].	
3	Executing U411	The scanner leading edge timing is incorrect	Execute U411 [Table(ChartA)].	
4	Checking the home position sensor	The home position sensor is not properly attached.	Reattach the home position sensor.	
5	Checking the belt tension	A load is applied to the scanner movement since the belt tension is improper.	Adjust the scanner motor belt tension properly.	
6	Checking the scanner wire drums	Installation of the scanner wire drum is loosen.	Retighten the screw of the scanner wire drums.	
7	Checking the scanner drive gear	The attachment of the scanner drive gear is loose.	Retighten the screw of the scanner drive gear.	

(4-9)Vertical streaks, band (white)

Step	Check description	Assumed cause	Measures	Reference
1	Checking the original	The original is dirty.	Replace the original.	
2	Cleaning the mirror	The mirror is dirty.	Clean the mirror in the lamp unit.	
3	Checking the lamp unit	The dust is adhered on the lamp unit.	Remove dust inside the laser path of the lamp unit.	
4	Checking the lens cover	The lens cover is off.	Reattach the lens cover.	
5	Checking the shading plate	The shading plate at the backside of the contact glass is dirty.	Clean the shading plate.	
6	Checking the connection	FFC is not connected properly. Or,FFC is faulty.	Clean and reconnect the FFC. If the FFC terminal section is deformed or FFC is broken,replace the FFC. • Image sensor PWB - Main PWB • Engine PWB - Main PWB	
7	Replacing the lens unit	The image sensor PWB is faulty.	Replace the lens unit.	
8	Replacing the engine PWB	The engine PWB is faulty.	Replace the engine PWB.	
9	Replacing the main PWB	The main PWB is faulty.	Replace the main PWB.	

(4-10)Moire

Step	Check description	Assumed cause	Measures	Reference
1	Changing the setting	The original image quality is not set properly. (Moire changes depending on the image quality.)	Set [Original Image] in the System Menu.	
2	Checking the original	The original is not set properly. (Moire appears in the original scanning direction.)	Rotate the originals in 90 degrees and reset them.	
3	Executing U065	The ratio in the main scanning direction is large. (This problem occurs when the print ratio is set as 100%.)	Change the value at U065 [Main Scan] to reduce the scanner magnification in the main scanning direction.	
4	Executing U411	Each adjustment of the scanner section is incorrect	Execute U411 [Table(ChartA)].	

(4-11)No image comes out (White or Black)

Step	Check description	Assumed cause	Measures	Reference
1	Checking the original	The originals were set upside down.	Reset the original to correct the front and back direction.	
2	Checking the connection	FFC is not connected properly. Or,FFC is faulty.	Clean and reconnect the FFC. If the FFC terminal section is deformed or FFC is broken,replace the FFC. • Image sensor PWB - Main PWB • Engine PWB - Main PWB	
3	Replacing the lens unit	The image sensor PWB is faulty.	Replace the lens unit.	
4	Replacing the engine PWB	The engine PWB is faulty.	Replace the engine PWB.	
5	Replacing the main PWB	The main PWB is faulty.	Replace the main PWB.	

(4-12)Image is dark partly or light

Step	Check description	Assumed cause	Measures	Reference
1	Changing the setting	Image quality is not properly adjusted. (Original type and image quality are mismatched.)	Set [Original Image] in the System Menu.	
2	Checking the original	The original is dirty.	Replace the original.	
3	Checking the original	The originals are bent or creased.	Stretch the bending or the paper creases of the original.	
4	Checking the original mat	The original mat shifts.	Reattach the original mat.	
5	Cleaning the contact glass	The contact glass is dirty.	Clean the contact glass.	
6	Checking the contact glass	The contact glass is not properly attached.	Reattach the contact glass.	
7	Checking the contact glass	Original is scanned on the bent contact glass.	Set the booklet original while not bending the contact glass.	
8	Checking the lens cover	The lens cover is off.	Reattach the lens cover.	
9	Cleaning the mirror	The mirror is dirty.	Clean the mirror in the lamp unit.	
10	Replacing the lamp unit	A part of LED does not switch on.	Check if the LED lamp lights by executing U061 [CCD]. If it does not light,replace the lamp unit.	
11	Checking the lamp unit	The mirror is attached at the incorrect position.	Reattach the lamp unit.	
12	Replacing the lamp unit	The LED reflector is not attached properly or deformed.	Replace the lamp unit.	
13	Checking the connection	FFC is not connected properly. Or,FFC is faulty.	Clean and reconnect the FFC. If the FFC terminal section is deformed or FFC is broken,replace the FFC. • Image sensor PWB - Main PWB • Engine PWB - Main PWB	
14	Replacing the lens unit	The image sensor PWB is faulty.	Replace the lens unit.	
15	Replacing the engine PWB	The engine PWB is faulty.	Replace the engine PWB.	
16	Replacing the main PWB	The main PWB is faulty.	Replace the main PWB.	

(4-13)Blurred image

Step	Check description	Assumed cause	Measures	Reference
1	Checking the original	The original is wavy.	Make the originals flat,or replace it if possible.	
2	Checking the contact glass	The contact glass has condensation.	Remove the condensation on the contact glass.	
3	Checking the lamp unit	The mirror has condensation.	Remove the condensation on the mirror in the lamp unit.	
4	Checking the lens unit	The lens has condensation.	Remove the condensation on the lens in the lens unit.	
5	Checking the Image sensor PWB	The glass of the Image sensor PWB has condensation.	Remove the condensation on the Image sensor PWB glass using a blower brush	
6	Executing U411	Each auto adjustment of the scanner is incorrect.	Execute U411 [Table(ChartA)].	
7	Checking the connection	FFC is not connected properly. Or,FFC is faulty.	Clean and reconnect the FFC. If the FFC terminal section is deformed or FFC is broken,replace the FFC. • Image sensor PWB - Main PWB • Engine PWB - Main PWB	
8	Replacing the lens unit	The image sensor PWB is faulty.	Replace the lens unit.	
9	Replacing the engine PWB	The engine PWB is faulty.	Replace the engine PWB.	
10	Replacing the main PWB	The main PWB is faulty.	Replace the main PWB.	

(4-14)Image is missing partly

Step	Check description	Assumed cause	Measures	Reference
1	Changing the setting	Marked part by highlighter pen on the original cannot be scanned.	The current value of the primary transfer is improperly set.	
2	Checking the original	The original is not set properly.	Reset the originals.	
3	Changing the setting	The original size and the paper side do not match on the operation panel. (The setting is incorrect.)	Set [Original Size] manually in the System Menu.	
4	Changing the setting	The copy position is rotated automatically.	Set [Auto Image Rotation] to [Off] from the system menu.	
5	Changing the setting	The Border Erase function is not properly set. (Setting is too large.)	Lower the setting of the Border Erase in the System Menu.	
6	Cleaning the contact glass	The original scanning side of the contact glass is dirty.	Clean the original scanning side of the contact glass.	
7	Cleaning the shading plate	The shading plate is dirty.	Clean the shading plate at the backside of the contact glass.	
8	Checking the contact glass	The contact glass is not properly attached.	Reattach the contact glass.	
9	Checking the connection	The connector or FFC is not properly connected,or the wire or FFC is faulty.	Reconnect the following wire connectors and reconnect the FFC. If there is no continuity,replace the wire. If the FFC terminal section is deformed or FFC is broken,replace the FFC. • Original size sensor - Engine PWB • Image sensor PWB - Main PWB • Engine PWB - Main PWB	
10	Checking the lens unit	The lens unit is not attached properly.	Reattach the lens unit.	
11	Replacing the original size sensor	Original size and paper size are not matched on the operation panel display. (Original size sensor is misdetected.)	Replace the original size sensor.	
12	Replacing the lens unit	The image sensor PWB is faulty.	Replace the lens unit.	
13	Replacing the engine PWB	The engine PWB is faulty.	Replace the engine PWB.	
14	Replacing the main PWB	The main PWB is faulty.	Replace the main PWB.	

(4-15)Skewed image

Step	Check description	Assumed cause	Measures	Reference
1	Checking the original	The original is not properly set. (The original is skewed.)	Reset the originals.	
2	Checking the scanner unit	The scanner unit height is improper.	Adjust the whole scanner unit height.	
3	Checking the lamp unit	The lamp unit is not attached properly.	Reattach the lamp unit.	

(4-16)Entire image is light

Step	Check description	Assumed cause	Measures	Reference
1	Changing the setting	The density is not properly adjusted. (The original type and image quality differs.)	Set the original Image quality fitting the original type in the system menu.	
2	Changing the setting	The density is not properly adjusted. ([EcoPrint] is set to "On".)	Chenge [EcoPrint] setting is [Off] in the system menu.	
3	Changing the setting	The density is not properly adjusted. (The density setting is too light.)	Set the density setting to be dark in the system menu.	
4	Changing the setting	The density is not properly adjusted. ([Background density] is set to "Off".)	Set [Manual] for [Background Density Adjustment] in the system menu and adjust the background image density.	
5	Changing the setting	[Prevent Bleed-thru] setting is [On]	Chenge [Prevent Bleed-thru] setting is [Off] in the system menu.	
6	Cleaning the shading plate	The shading plate is dirty.	Clean the shading plate at the backside of the contact glass.	
7	Executing U411	The image is not adjusted.	Execute U411 [Table(ChartA)].	
8	Checking the connection	FFC is not connected properly. Or,FFC is faulty.	Clean and reconnect the FFC. If the FFC terminal section is deformed or FFC is broken,replace the FFC. • Image sensor PWB - Main PWB • Engine PWB - Main PWB	
9	Checking the lens unit	The lens unit is not attached properly.	Reattach the lens unit.	
10	Replacing the lens unit	The image sensor PWB is faulty.	Replace the lens unit.	
11	Replacing the engine PWB	The engine PWB is faulty.	Replace the engine PWB.	
12	Replacing the main PWB	The main PWB is faulty.	Replace the main PWB.	

(5)Engine Factors (Paper conveying cause: Transfer, Fuser and Separation)

No.	Contents	Image sample
(5-1)	Background image is foggy. (page 7-40)	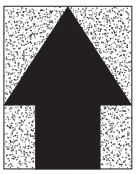
(5-2)	Black dots (toner dirt) (page 7-40)	
(5-3)	Image is missing partly (blank image, white spots) (page 7-41)	
(5-4)	Image is missing partly (When feeding from the MP tray) (page 7-41)	
(5-5)	Blank image (page 7-41)	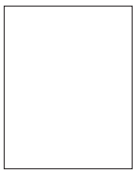
(5-6)	Mismatch between the original center line and output image center line (page 7-42)	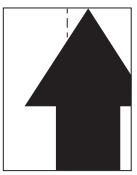
(5-7)	Dirty reverse side (page 7-42)	
(5-8)	Entire image is light (page 7-43)	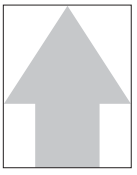

No.	Contents	Image sample
(5-9)	Horizontal streaks, band (White, black) (page 7-43)	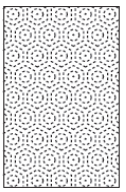
(5-10)	Irregular mismatch of the leading edge between the original and output image (paper leading edge timing variation) (page 7-45)	
(5-11)	Blurred characters (page 7-45)	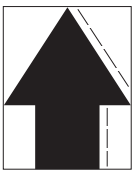
(5-12)	Offset (page 7-46)	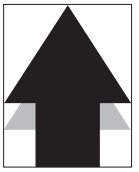
(5-13)	Fusing failure (page 7-48)	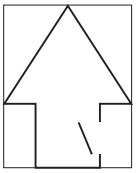
(5-14)	Paper skew at the trailing edge (page 7-48)	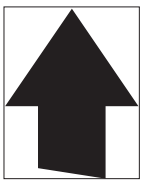
(5-15)	Uneven transfer (page 7-49)	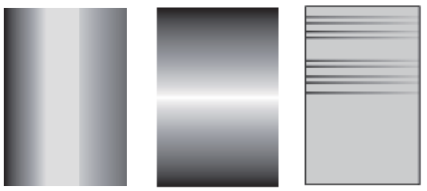
(5-16)	Blurred image (page 7-50)	

No.	Contents	Image sample
(5-17)	Vertical streaks, band (white) (page 7-51)	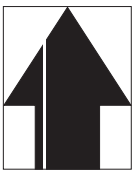
(5-18)	Vertical streaks and bands (black) (page 7-51)	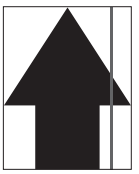
(5-19)	Granular image (Printing the solid image in the monochrome mode) (page 7-52)	

Content of Engine Factors (Paper conveying cause: Transfer, Fuser and Separation)

(5-1)Background image is foggy.

Step	Check description	Assumed cause	Measures	Reference
1	Checking the primary transfer unit	The transfer belt surface is dirty.	If the image failure occurs at the outer pitch (long period that spans between papers) of the transfer belt,clean the transfer belt with the dry cloth. If not resolved,replace the primary transfer unit.	
2	Checking the primary transfer bias contact	The primary transfer bias contact is deformed.	Correct the primary transfer bias contact so that it grounds securely.	Primary transfer bias contacts and Primary transfer cleaning bias contacts and Secondary transfer current contact (page 7-452)
3	Checking the secondary transfer bias contact	The secondary transfer bias contact is deformed.	Correct the secondary transfer bias contact so that it grounds the shaft of the secondary transfer roller securely.	
4	Checking the secondary transfer roller	The secondary transfer roller is dirty.	If image failure occurs at the circumferential pitch of the secondary transfer roller,clean it. If it is not improved,replace the secondary transfer roller.	

(5-2)Black dots (toner dirt)

Step	Check description	Assumed cause	Measures	Reference
1	Executing the Laser Scanner Cleaning	The transfer belt cantbecleanedasthebeltpre-brushisdirty'	Execute the laser scanner cleaning. (The belt pre-brush and the cleaning fur brush of the primary transfer unit rotate and cleaned)	
2	Checking the primary transfer unit	There is dirt and scratches of the long period that spans between the sheets at the outer pitch (A3 3-sheet continuous printing) of the transfer belt or the transfer belt cannot be cleaned due to the faulty belt pre-brush.	If the image failure occurs at the outer pitch (long period that spans between papers) of the transfer belt,clean the transfer belt with the dry cloth. If not resolved,replace the primary transfer unit.	
3	Checking the fuser unit	Fuser belt is dirty. Or,foreign objects are adhered or scratched.	If image failure occurs at the circumferential pitch of the fuser belt,clean it. Or,print the solid image to remove the foreign objects on the fuser belt. If it is not improved,replace the fuser unit.	
4	Checking the secondary transfer roller	The secondary transfer roller is dirty or has some scratches.	If image failure occurs at the circumferential pitch of the secondary transfer roller,clean it. If it is not improved,replace the secondary transfer roller.	

(5-3)Image is missing partly (blank image, white spots)

Step	Check description	Assumed cause	Measures	Reference
1	Setting the media type	The media type is not properly set.	Set the proper media type via the System Menu.	
2	Executing U161	The fuser control temperature is not proper set.	Execute U161 [Warm Up] and [Print] to check if the fuser control temperature is the default value. If it has changed,set it back to the default value.	
3	Replacing paper	The paper is damp.	Replace with the dry paper.	
4	Checking the paper storage place	The paper is stored in the high humidity environment.	Instruct the user to store the paper in a place with low humidity. And also consider to Install the cassette heater if necessary.	
5	Checking the primary transfer unit	Surface of the transfer belt is dirty or scratched.	If the image failure occurs at the outer pitch (long period that spans between papers) of the transfer belt,clean the transfer belt with the dry cloth. If not resolved,replace the primary transfer unit.	
6	Checking the secondary transfer roller	The secondary transfer roller is dirty or has some scratches.	If image failure occurs at the circumferential pitch of the secondary transfer roller,clean it. If it is not improved,replace the secondary transfer roller.	

(5-4)Image is missing partly (When feeding from the MP tray)

Step	Check description	Assumed cause	Measures	Reference
1	Changing the setting	The MP tray size is detected as unknown "---".	Set the MP tray paper size properly in the System Menu.	
2	Checking the sub tray	The MP tray size is detected as unknown "---".	Pull out the sub tray until the position where the triangle mark can be seen or store it in the MP frame completely.	

(5-5)Blank image

Step	Check description	Assumed cause	Measures	Reference
1	Checking the right cover	The right cover (conveying unit) is not closed completely.	Check the lock of the right cover (conveying unit),and then open and close the right cover.	
2	Checking the connection	The connector is not connected properly,or the wire is faulty.	Clean the terminal of the following wire connectors and reconnect the connectors. If there is no continuity,replace the wire. • Transfer high voltage PWB - Engine PWB	
3	Replacing the transfer high voltage PWB	The secondary transfer bias output from the transfer high voltage PWB is faulty.	Replace the transfer high voltage PWB.	
4	Replacing the engine PWB	The ON signal of the secondary transfer high-voltage (3.3V to 0V) is not output from the engine PWB.	Replace the engine PWB.	

(5-6)Mismatch between the original center line and output image center line

Step	Check description	Assumed cause	Measures	Reference
1	Checking the paper width guides or the MP paper width guides	The locations of the paper width guides or the MP paper width guides do not fit with the paper size.	Relocate the paper width guides or the MP paper width guides to match the paper size.	
2	Executing U034	The center line when image writing the data is incorrect.	Adjust the center line at U034 [Center Line].	

(5-7)Dirty reverse side

Step	Check description	Assumed cause	Measures	Reference
1	Changing the setting	The control voltage of the secondary transfer is improperly set.	Reset the control voltage of the secondary transfer to the default value at U106.	
2	Cleaning the fuser press roller and setting the media type	The fuser pressure roller is dirty caused by the paper type setting.	Open the original holder,perform double - sided copying of the solid image,and clean the fuser pressure roller. Next,set the appropriate paper type in the system menu.	
3	Cleaning the conveying guide and the developer unit	The conveying guide or the developer unit is dirty.	Clean the conveying guide and developer unit.	
4	Checking the secondary transfer roller	The secondary transfer roller is dirty or has some scratches.	If image failure occurs at the circumferential pitch of the secondary transfer roller,clean it. If it is not improved,replace the secondary transfer roller.	

(5-8)Entire image is light

Step	Check description	Assumed cause	Measures	Reference
1	Checking the right cover	The transfer current cannot be impressed since the right cover (conveying unit) is not closed completely.	Check the lock of the right cover (conveying unit),and then open and close the right cover.	
2	Changing the setting	The control voltage of the secondary transfer is improperly set.	Reset the control voltage of the secondary transfer to the default value at U106.	
3	Replacing paper	The paper is damp.	Replace the paper.	
4	Checking the paper storage place	Paper is stored in the high humidity environment.	Instruct the user to store the paper in a place with low humidity. And also consider to Install the cassette heater if necessary.	
5	Checking the secondary transfer current contacts	The secondary transfer current contact is dirty or deformed,so,the impression is unavailable.	Clean the secondary transfer current contact. Or,correct its shape so that it is grounded securely.	Primary transfer bias contacts and Primary transfer cleaning bias contacts and Secondary transfer current contact (page 7-452)
6	Changing the setting	Execute U140 and adjust the altitude at [Altitude Adj].	Retrieve the Primary transfer current value to the default at U101	
7	Replacing the primary transfer unit	The primary transfer unit does not operate properly.	Replace the primary transfer unit.	
8	Checking the connection	The connector is not connected properly,or the wire is faulty.	Clean the terminal of the following wire connectors and reconnect the connectors. If there is no continuity,replace the wire. • Transfer high voltage PWB - Engine PWB	
9	Replacing the transfer high voltage PWB	The secondary transfer bias output from the transfer high voltage PWB is faulty.	Replace the transfer high voltage PWB.	
10	Replacing the engine PWB	The ON signal of the secondary transfer high-voltage (3.3V to 0V) is not output from the engine PWB.	Replace the engine PWB.	

(5-9)Horizontal streaks, band (White, black)

Step	Check description	Assumed cause	Measures	Reference
1	Checking the right cover	The right cover (conveying unit) is not closed completely.	Check the lock of the right cover (conveying unit),and then open and close the right cover.	
2	Checking the primary transfer unit	The transfer belt surface is dirty or scratched	If the image failure occurs at the outer pitch (long period that spans between papers) of the transfer belt,clean the transfer belt with the dry cloth. If not resolved,replace the primary transfer unit.	
3	Checking the fuser unit	The fuser belt surface is dirty or scratched	If image failure occurs at the circumferential pitch of the fuser belt,clean it. If it is not improved,replace the fuser unit.	

Step	Check description	Assumed cause	Measures	Reference
4	Reinstalling the Secondary Transfer Roller	The pressure spring is not properly attached or deformed.	Reinstalled the Secondary Transfer Roller and reattach the pressure spring. If the pressure spring is deformed,replace it.	

(5-10)Irregular mismatch of the leading edge between the original and output image (paper leading edge timing variation)

Step	Check description	Assumed cause	Measures	Reference
1	Executing U034	The leading edge timing is not properly adjusted.	Adjust the leading edge timing at U034 [Strat position].	
2	Executing U051	The paper loop amount is improper.	Execute U051 to adjust the paper loop amount.	
3	Checking the clutch	The feed conveying related clutch does not operate correctly.	Execute U032. If the paper feed / conveying related clutches (feed clutch or registration clutch) do not operate properly,reattach them and reconnect the connectors. If not repaired,replace the clutch.	

(5-11)Blurred characters

Step	Check description	Assumed cause	Measures	Reference
1	Changing the setting	The media type is not properly set.	Set the media type and paper weight properly in the System Menu.	
2	Replacing paper	Unspecified papers are used.	Replace with the paper within the specification.	
3	Applying the grease	The drives from the conveying motors are not smoothly transmitted.	Apply the grease to the drive gear of the conveying related motor. (EM-50LP: Part number (7BG010009H))	
4	Replacing the conveying guide	The conveying guide is deformed.	Replace the conveying guide.	
5	Replacing the fuser unit	The fuser forwarding guide is deformed or the fuser pressure is uneven.	Replace the fuser unit.	

(5-12)Offset

Step	Check description	Assumed cause	Measures	Reference
1	Changing the setting	The media type is not properly set.	Set the media type and paper weight properly in the System Menu.	
2	Replacing paper	Unspecified papers are used.	Replace with the paper within the specification.	
3	Executing U107	The setting value of the primary transfer cleaning voltage at U107 is incorrect.	Reset the primary transfer cleaning voltage to the default value at U107.	
4	Checking the primary transfer unit	The transfer belt surface is dirty.	If the image failure occurs at the outer pitch (long period that spans between papers) of the transfer belt,clean the transfer belt with the dry cloth.	
5	Checking the primary transfer cleaning bias contact	The primary transfer cleaning bias contact smudges or is deformed.	Clean the primary transfer cleaning bias contact with the dry cloth. Or,correct its shape so that it is securely grounded.	Primary transfer bias contacts and Primary transfer cleaning bias contacts and Secondary transfer current contact (page 7-452)
6	Executing U106	The secondary transfer voltage is improperly set.	Reset the secondary transfer voltage to the default value at U106.	
7	Cleaning the secondary transfer roller	The secondary transfer roller is dirty.	When the image failure appears with the secondary transfer roller pitch,clean the secondary transfer roller.	
8	Executing U161	The fuser control temperature is set to high..	Execute U161 [Warm Up] and [Print] to check if the fuser control temperature is the default value. If it has changed,set it back to the default value.	
9	Cleaning the fuser belt	The fuser belt is dirty.	When the image failure appears in the fuser belt length interval,clean the fuser belt.	
10	Checking the fuser discharge needles	If toner organic material adheres and accumulates on the leading ends of the fuser discharge needles depending on the high print volume with the high print coverage,the charging efficiency is reduced.	If image failure occurs at the circumferential pitch of the fuser belt after cleaning,check the fuser discharge needle. If yellow dirt (toner organic objects) adhere to the fuser discharge needle,replace the fuser discharge needle.	
11	Replacing the fuser unit	The fuser belt surface has some scratches.	Replace the fuser unit.	
12	Replacing the primary transfer unit	Transfer cleaning voltage is not applied due to the broken wire in the primary transfer unit.	Replace the primary transfer unit.	
13	Checking the connection	The connector is not connected properly or,the cleaning bias of the primary transfer does not apply as the wire is faulty.	Clean the terminal of the following wire connectors and reconnect the connectors. If there is no continuity,replace the wire. • Transfer high voltage PWB - Engine PWB	
14	Replacing the transfer high voltage PWB	The transfer high voltage PWB is faulty.	Replace the transfer high voltage PWB.	

Step	Check description	Assumed cause	Measures	Reference
15	Replacing the engine PWB	The engine PWB is faulty.	Replace the engine PWB.	

(5-13)Fusing failure

Step	Check description	Assumed cause	Measures	Reference
1	Setting the media type	The media type is not properly set.	Set the proper media type via the System Menu.	
2	Replacing paper	Unspecified papers are used.	Replace with the proper paper.	
3	Executing U161	The fuser control temperature is set to low.	Execute U161 [Warm Up] and [Print] to check if the fuser control temperature is the default value. If it has changed,set it back to the default value.	
4	Replacing the fuser unit	The nipped pressure (width) to the solid image is low and fuser pressure setting (spring) is too weak.	Replace the fuser unit.	

(5-14)Paper skew at the trailing edge

Step	Check description	Assumed cause	Measures	Reference
1	Cleaning the secondary transfer unit	The neighboring parts of the secondary transfer roller are dirty with paper dust.	Clean the secondary transfer roller,discharge needle,discharge sheet and the paper conveying route.	
2	Removing foreign material	Paper is caught by foreign material such as a piece of paper.	Replace the toner sucking fan motor if it does not operate properly when executing U037 [Toner].	
3	Relocating the paper width guides or the MP paper width guides	The paper width guide or MP paper width guide setting position does not match the paper size,and the paper is being transported diagonally.	Relocate the paper width guides or the MP paper width guides to match the paper size.	
4	Checking the conveying section	The resist roller or middle pulley is not installed properly. Or it is dirty.	Check that the resist roller or middle pulley is installed properly,and then reinstall it if necessary. Also,if it is dirty with toner or paper dust,clean it.	
5	Checking the right cover	The right cover (conveying unit) is not closed completely.	Check the lock of the right cover (conveying unit),and then open and close the right cover.	
6	Reinstalling the fuser unit	The fuser unit is not properly installed.	Insert the fuser unit straight into the main unit,and lock both sides of the fuser unit firmly.	
7	Adjusting the fuser unit height	The fuser unit height is improper.	Adjust the height adjusting lever at the machine inner front side that can adjust the fuser unit height.	

(5-15)Uneven transfer

Step	Check description	Assumed cause	Measures	Reference
1	Checking the right cover	The right cover (conveying unit) is not closed completely.	Check the lock of the right cover (conveying unit),and then open and close the right cover.	
2	Executing the Laser Scanner Cleaning	Paper dust is accumulated around the cleaning cleaning brush.	Execute the laser scanner cleaning. (The belt pre-brush and the cleaning fur brush of the primary transfer unit rotate and cleaned)	
3	Checking the primary transfer cleaning bias contact	The primary transfer cleaning bias contact smudges or is deformed.	Clean the primary transfer cleaning bias contact with the dry cloth. Or,correct its shape so that it is securely grounded.	Primary transfer bias contacts and Primary transfer cleaning bias contacts and Secondary transfer current contact (page 7-452)
4	Reinstalling the Secondary Transfer Roller	The pressure spring is not properly attached or deformed.	Reinstalled the Secondary Transfer Roller and reattach the pressure spring. If the pressure spring is deformed,replace it.	
5	Checking the primary transfer unit	The surface of the transfer belt is dirty or scratched. There is something wrong with the primary transfer cleaning bias contact.	If the image failure occurs at the outer pitch (long period that spans between papers) of the transfer belt,clean the transfer belt with the dry cloth. If not resolved,replace the primary transfer unit.	Primary transfer bias contacts and Primary transfer cleaning bias contacts and Secondary transfer current contact (page 7-452)
6	Replacing the fuser unit	The roller,or the parts in the drive section or the fuser press-release section are deformed or worn down.	Replace the fuser unit.	
7	Checking the secondary transfer roller	The secondary transfer roller is dirty,or faulty.	In case of occurring the image failure at the circumferential pitch of the secondary transfer roller,clean it. If it does not improve,replace the secondary transfer roller.	
8	Checking the connection	The connector is not connected properly,or the wire is faulty.	Clean the terminal of the following wire connectors and reconnect the connectors. If there is no continuity,replace the wire. • Transfer high voltage PWB - Engine PWB	

Step	Check description	Assumed cause	Measures	Reference
9	Replacing the transfer high voltage PWB	The primary transfer cleaning bias contact is faulty.	Replace the transfer high voltage PWB.	Primary transfer bias contacts and Primary transfer cleaning bias contacts and Secondary transfer current contact (page 7-452)
10	Replacing the engine PWB	The engine PWB is faulty.	Replace the engine PWB.	

(5-16)Blurred image

Step	Check description	Assumed cause	Measures	Reference
1	Replacing paper	The paper is damp.	Replace with the new dry paper.	
2	Checking the paper storage place	Paper is stored in the high humidity environment.	Instruct the user to store the paper in a place with low humidity. And also consider to Install the cassette heater if necessary.	

(5-17)Vertical streaks, band (white)

Step	Check description	Assumed cause	Measures	Reference
1	Checking the primary transfer unit	Surface of the transfer belt is dirty or scratched.	If the image failure occurs at the outer pitch (long period that spans between papers) of the transfer belt,clean the transfer belt with the dry cloth. If not resolved,replace the primary transfer unit.	
2	Checking the secondary transfer roller	The secondary transfer roller is dirty or has some scratches.	If image failure occurs at the circumferential pitch of the secondary transfer roller,clean it. If it is not improved,replace the secondary transfer roller.	
3	Checking the exit feed-shift guide	Paper contacts to the exit feed-shift guide strongly.	Check the operation of the output feedshift guide,and reinstall theoutput feedshift guide if necessary.	

(5-18)Vertical streaks and bands (black)

Step	Check description	Assumed cause	Measures	Reference
1	Checking the fuser unit	The fuser pressure roller,the fuser pressure roller separation claw and the fuser separation plate are dirty by the paper dust. The fuser belt is worn down or the parts inside the fuser unit are damaged.	Open the original holder,perform double - sided copying of the solid image,and clean the fuser pressure roller. Also,clean the fuser pressure roller separation claw and the fuser separation plate. Turn the fuser drive gear by hand,and if there is something wrong with the rotation of the fuser belt,replace the fuser unit.	
2	Changing the setting	The media type is not properly set.	Set the proper media type via the System Menu.	
3	Cleaning the exit feed-shift guide	The exit feed-shift guide has toner dirt or welding.	Clean the exit feed-shift guide with the dry cloth.	
4	Cleaning the discharge needle	The discharge needle is dirty by the paper dust or the toner.	Clean the discharge needle which is upper part of the secondary transfer roller by the Cleaning brush,etc..	
5	Executing the Laser Scanner Cleaning	The transfer belt cantbecleanedasthebeltpre-brushisdirty'	Execute the laser scanner cleaning. (The belt pre-brush and the cleaning fur brush of the primary transfer unit rotate and cleaned)	
6	Checking the primary transfer unit	Surface of the transfer belt is dirty or scratched.	If the image failure occurs at the outer pitch (long period that spans between papers) of the transfer belt,clean the transfer belt with the dry cloth. If not resolved,replace the primary transfer unit.	
7	Checking the primary transfer cleaning bias contact	The primary transfer cleaning bias contact smudges or is deformed.	Clean the primary transfer cleaning bias contact with the dry cloth. Or,correct its shape so that it is securely grounded.	Primary transfer bias contacts and Primary transfer cleaning bias contacts and Secondary transfer current contact (page 7-452)

Step	Check description	Assumed cause	Measures	Reference
8	Checking the secondary transfer roller	The secondary transfer roller is dirty,is deformed or is worn down.	If image failure occurs at the circumferential pitch of the secondary transfer roller,clean it. If it is not improved,replace the secondary transfer roller.	
9	Replacing the fuser discharge needle unit	The leading edge of the fuser discharger needle is dirty,deformed or worn down.	Replace the fuser discharge needle unit.	
10	Checking the connection	The connector is not connected properly,or the wire is faulty.	Clean the terminal of the following wire connectors and reconnect the connectors. If there is no continuity,replace the wire. • Transfer high voltage PWB - Engine PWB	
11	Replacing the transfer high voltage PWB	The cleaning bias is not generated from the transfer high voltage PWB.	Replace the transfer high voltage PWB.	
12	Replacing the engine PWB	The engine PWB is faulty.	Replace the engine PWB.	

(5-19)Granular image (Printing the solid image in the monochrome mode)

Step	Check description	Assumed cause	Measures	Reference
1	Checking the paper	The paper surface is not smooth.	Perform printing operation on color printing paper and check if the same phenomenon occurs. If there are differences in the paper,change the settings for the paper you are using. If the problem persists after changing the settings,please suggest a paper change to the user.	
2	Executing U161	The fuser temperature does not match the media type.	Change U161 [Grain Mode] to [Mode1] (Granular image improvement mode). If not repaired,change to [Mode2] (Granular image further improvement mode).	
3	(When using the thick paper with Heavy 1-3) Setting the media type	The fuser temperature does not match the media type.	Chenge the paper weight in [Media type Settings] in the System Menu.	

(6)Engine Factors (Image forming cause)

No.	Contents	Image sample
(6-1)	Background image is foggy. (page 7-56)	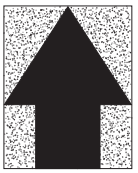
(6-2)	Background image is foggy. (page 7-57)	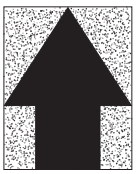
(6-3)	Background image is foggy. (page 7-58)	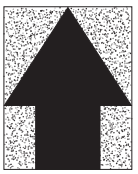
(6-4)	Entire image is light (page 7-59)	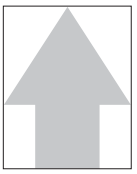
(6-5)	Entire image is light (page 7-60)	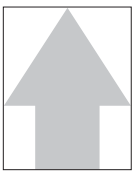
(6-6)	Entire image is light (page 7-62)	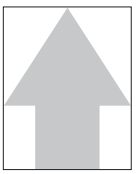
(6-7)	Blank image (page 7-63)	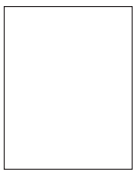
(6-8)	Toner dirt (page 7-64)	

No.	Contents	Image sample
(6-9)	Periodic toner dirt (page 7-64)	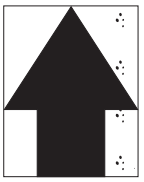
(6-10)	No image comes out (Black) (page 7-66)	
(6-11)	Horizontal streaks, band (White, black) (page 7-67)	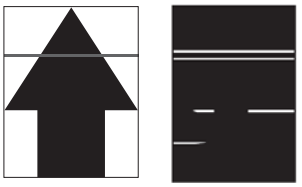
(6-12)	Irregular horizontal white streaks, white spots (page 7-68)	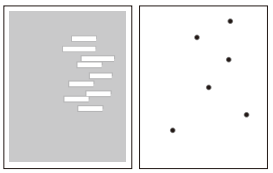
(6-13)	Horizontal uneven density (page 7-69)	
(6-14)	Image is missing partly (page 7-69)	
(6-15)	Offset (page 7-69)	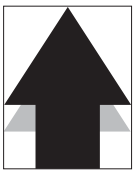
(6-16)	Gradation reproducibility is low (page 7-70)	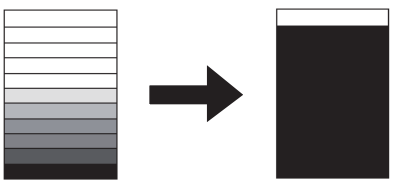

No.	Contents	Image sample
(6-17)	Blurred image (page 7-71)	
(6-18)	Light vertical black streaks at both edge of paper which is outside of the image area (page 7-71)	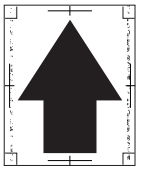
(6-19)	Vertical streaks or bands (page 7-71)	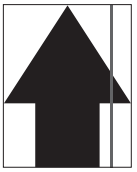
(6-20)	Vertical uneven density (page 7-72)	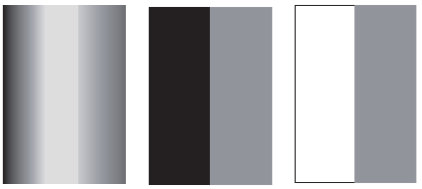
(6-21)	Vertical streaks, band (white) (page 7-72)	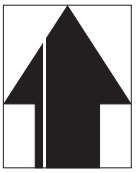
(6-22)	Uneven halftone image (page 7-73)	

Content of Engine Factors (Image forming cause)

(6-1)Background image is foggy.

Step	Check description	Assumed cause	Measures	Reference
1	Measures for the image quality improvement	Uncharged toner is increasing due to the high density continuous printing in the high temperature environment.	Execute developer Refresh > Gradation Adjustment (including calibration execution) in the system menu.	
2	Checking the toner coverage (T/C)	Toner coverage (T/C) is high.	Each color sensor value on U155 [Toner] is a positive value,execute developer refresh until the value becomes [0].	
3	Checking the print coverage	The charge amount of the toner is low.	Check the print coverage on the service status page and if printing is done with high density,execute the developer refresh.	
4	Checking the developer bias contact	The developer bias contact is dirty or deformed.	Clean the developer bias contact,or correct its shape so that it grounds securely.	Developer bias contacts and MC high voltage contacts (page 7-451)
5	Checking the high voltage contact	The high voltage contact of the main high voltage PWB is dirty or deformed.	Clean the high voltage contact and correct it to ensure that it is grounded. Or,reinstall the main high voltage PWB.	
6	Checking the developer unit	The toner sensor is faulty.	Reattach the developing unit. If it does not improve,replace the developing unit.	
7	Checking the connection	The connector is not connected properly,or the wire is faulty.	Clean the terminals of the electric wire connector below and reinsert them. If there is no continuity,replace the wire. • Main high voltage PWB - Image drive PWB • Image drive PWB - Engine PWB	
8	Replacing the main high voltage PWB	Developing bias output from main high voltage PWB is high	Replace the main high voltage PWB.	
9	Replacing the image drive PWB	The image drive PWB is faulty.	Replacing the image drive PWB	
10	Replacing the engine PWB	The engine PWB is faulty.	Replace the engine PWB.	

(6-2)Background image is foggy.

Step	Check description	Assumed cause	Measures	Reference
1	Checking the temperature inside the main unit	Temperature is low in the installation environment.	If the machine inside temperature is below 10°C / 50°F at U139,instruct user to change the installation environment of the room temperature 16°C / 60.8°F or higher. (This phenomenon tends to occur immediately after being left in a low temperature environment for few days if turning on the power).	
2	Changing the setting	The setting value of the main high voltage is incorrect.	If the settings U100 [Adj DC Bias] and [Set DC Manual] are different from the default values,return them to the default values.	
3	Checking the main charger high voltage contact	Main charger high voltage contact on the main high voltage PWB is dirty or deformed.	Clean the charger high voltage contact and correct it to ensure that it is grounded. Or,reinstall the main high voltage PWB.	Developer bias contacts and MC high voltage contacts (page 7-451)
4	Specifying the faulty color	(Specify the abnormal color)	Output [Color Belt] on U089 and identify the defective color. (In the following procedure,the unit of the color specified in this procedure is the target of treatment.)	
5	Re - installing the charger roller unit	The charger roller unit is not installed properly.	Reattach the charger roller unit to the drum unit,and then reattach the drum unit to the Main unit to ensure that the connector is connected.	
6	Checking the main charger roller unit	The surface of the MC roller is dirty. Or,the MC roller has reached the end of its life.	Clean the surface of the MC roller with a dry cloth. Also,if the MC roller counter on the U930 exceeds "150000",the drum surface potential will be low in a low temperature environment,so replace the charger roller unit.	
7	Replacing the drum unit	The drum is faulty.	Replace the drum unit.	
8	Checking the connection	The connector is not connected properly,or the wire is faulty.	Clean the terminals of the electric wire connector below and reinsert them. If there is no continuity,replace the wire. • Main high voltage PWB - Image drive PWB • Image drive PWB - Engine PWB	
9	Replacing the main high voltage PWB	Main charger bias output from the main high voltage PWB is low.	Replace the main high voltage PWB.	
10	Replacing the image drive PWB	The image drive PWB is faulty.	Replacing the image drive PWB	
11	Replacing the engine PWB	The engine PWB is faulty.	Replace the engine PWB.	

(6-3)Background image is foggy.

Step	Check description	Assumed cause	Measures	Reference
1	Checking the drum unit and the developer unit	The drum driving distance counts are not reset since the drum unit was replaced without turning off the main power,and accordingly the excessive image correction is performed.	Check the drum driving distance counts of the corresponding drum by executing U120. If the counts on the operation panel certainly differ from the actual ones,turn the main power on and off. When the counts are not recovered,replace the drum unit since the EEPROM PWB in the drum unit might be damaged due to the hot-swapping.	
2	Checking the connection	The connector is not connected properly,or the wire is faulty.	Clean the terminals of the electric wire connector below and reinsert them. If there is no continuity, replace the wire. • Front ID sensor / Rear ID sensor - Feed drive PWB • Cleaning solenoid - Feed drive PWB • Feed drive PWB - Engine PWB	
3	Checking the ID sensor	Calibration is not executed properly.	Output the event log report and if there is a history of C7601 or C7602,clean the front ID sensor or rear ID sensor,and execute calibration. If not improved,replace front ID sensor or rear ID sensor.	
4	Checking the cleaning solenoid	The cleaning solenoid does not operate.	Execute U033 [ID Sensor]. If the cleaning solenoid does not operate properly, reattach it and reconnect the connector. If not repaired, replace it.	
5	Checking the connection	FFC terminal is not connected properly. Or,FFC is faulty.	Reconnect the following FFC. If FFC terminal is deformed or FFC is damaged, replace FFC. • LSU (APC PWB) - Main PWB	
6	Replacing the LSU	The LSU is faulty.	Replace the LSU.	
7	Replacing the feed drive PWB	The feed drive PWB is faulty.	Replace the feed drive PWB.	
8	Replacing the engine PWB	The engine PWB is faulty.	Replace the engine PWB.	
9	Replacing the main PWB	The main PWB is faulty.	Replace the main PWB.	

(6-4)Entire image is light

Step	Check description	Assumed cause	Measures	Reference
1	Specifying the faulty color	(Specify the abnormal color)	Output [Color Belt] on U089 and identify the defective color. (In the following procedure,the unit of the color specified in this procedure is the target of treatment.)	
2	Reinstalling the toner container	Toner is collected on one side.	Sufficiently shake the toner container and reinstall it to the main unit.	
3	Replacing the toner container	The toner supply opening does not open.	If toner opening does not open,replace the toner container.	
4	Executing U140	The developer bias values that are fixed (except "Sleeve AC" and "Mag DC") and are not changed according to the Calibration are changed from the default value.	Execute U140 and reset the developer bias to the default value.	
5	Measures for the image quality improvement	Calibration is executed with the condition of the light density,and developing bias is controlled with a high level. Or,the toner is deteriorated due to many low density printing.	Execute developer Refresh > Gradation Adjustment (including calibration execution) in the system menu.	
6	Checking the toner coverage (T/C)	Toner density (T/C) is low.	If the Sensor value of each color of U155 [Toner] is a negative value,forcibly replenish the toner of that color with U132 until the value becomes "0".	
7	Checking the print coverage	The charge amount of the toner is high.	Check the print coverage on the service status page and if printing is done with low density lower than 2%,execute the developer refresh.	
8	U464 Execution	Toner on the developing roller is little as the developing bias is set low.	Adjust the value of U464 [Target Value] in the range of +30 from the default value. After that,execute [Gradation adjustment] (including calibration execution) from the system menu.	
9	Executing U106	The setting value of the secondary transfer control voltage has been changed.	If the setting value of the secondary transfer control voltage of U106 is different from the default value,return it to the default value.	
10	Checking the drum unit and the developer unit	The developing roller does not contact with the drum as the drum unit or the developer unit is not installed properly.	Reinstall the drum unit and the developer unit.	
11	Checking the developer unit	The DS pulleys are dirty.	Clean the DS pulleys at both ends of the developer unit.	
12	Checking the developer unit	The toner sensor has a fault and so toner is not supplied.	Execute Developer Refresh when the four-color PG image output as test page is too light.	
13	Checking the developer bias contact	The developer bias contact is deformed.	Correct the developer bias contact so that it grounds securely.	Developer bias contacts and MC high voltage contacts (page 7-451)

Step	Check description	Assumed cause	Measures	Reference
14	Checking the primary transfer unit	The image become light since there is a conductivity between the backup roller of the primary transfer unit and the drive roller,and the secondary transfer current leaks to the backup roller.	If there is conductive grease on the frame between the backup roller and drive roller of the primary transfer unit,wipe it off.	
15	Checking the primary transfer bias contact	The primary transfer bias contact is deformed.	Correct the primary transfer bias contact so that it grounds securely.	Primary transfer bias contacts and Primary transfer cleaning bias contacts and Secondary transfer current contact (page 7-452)
16	Replacing the primary transfer unit	The primary transfer roller comes off or transfer belt is deteriorated	Replace the primary transfer unit.	
17	Checking the connection	The connector is not connected properly,or the wire is faulty.	Clean the terminals of the electric wire connector below and reinsert them. If there is no continuity, replace the wire. <b • Main high voltage PWB - Image drive PWB • Transfer high voltage PWB - Engine PWB • Toner motor - Image drive PWB	
18	Replacing the toner motor	Toner motor does not operate properly	Execute U135 [Toner] and check the operation of the toner motor. If it does not work properly,reinstall it and reinsert the connector. If it is not repaired,replace it.	
19	Replacing the main high voltage PWB	The main high voltage PWB is faulty.	Replace the main high voltage PWB.	
20	Replacing the transfer high voltage PWB	The transfer high voltage PWB is faulty.	Replace the transfer high voltage PWB.	
21	Replacing the image drive PWB	The image drive PWB is faulty.	Replacing the image drive PWB	
22	Replacing the engine PWB	The engine PWB is faulty.	Replace the engine PWB.	

(6-5)Entire image is light

Step	Check description	Assumed cause	Measures	Reference
1	Executing Drum refresh	Condensation on the drum surface	Execute Drum refresh.	
2	Checking the main charger high voltage contact	The voltage applied to the charged high voltage contact is high.	Correct the charged high voltage contacts to ensure grounding.	Developer bias contacts and MC high voltage contacts (page 7-451)

Step	Check description	Assumed cause	Measures	Reference
3	Checking the drum unit and the developer unit	Eraser is faulty	Reinsert the drum unit into the main unit all the way to reconnect the connector. If not resolved, replace the drum unit.	
4	Replacing the drum unit	Since the photosensitive layer is thin,the surface potential of the drum after exposure is high. The drum surface is worn. Or the drum is not grounded.	If the U110 has a drum counter of 600,000 or more,replace the drum unit. If there is no continuity between the drum and the frame,replace the drum unit.	
5	Checking the connection	The connector is not connected properly,or the wire is faulty.	Clean the terminals of the electric wire connector below and reinsert them. If there is no continuity, replace the wire. • Main high voltage PWB - Image drive PWB	
6	Replacing the main high voltage PWB	The main high voltage PWB is faulty.	Replace the main high voltage PWB.	
7	Replacing the image drive PWB	The image drive PWB is faulty.	Replacing the image drive PWB	

(6-6)Entire image is light

Step	Check description	Assumed cause	Measures	Reference
1	Checking the connection	The connector is not connected properly,or the wire is faulty.	Clean the terminals of the electric wire connector below and reinsert them. If there is no continuity, replace the wire. • Front ID sensor / Rear ID sensor - Feed drive PWB • Cleaning solenoid - Feed drive PWB • Feed drive PWB - Engine PWB	
2	Checking the ID sensor	Calibration is not executed properly.	Output the event log report and if there is a history of C7601 or C7602,clean the ID sensor and execute calibration. If not improved,replace ID sensor.	
3	Checking the cleaning solenoid	The cleaning solenoid does not operate.	Execute U033 [ID Sensor]. If the cleaning solenoid does not operate properly,reattach it and reconnect the connector. If not repaired,replace it.	
4	Checking the connection	The connector or FFC terminal is not connected properly. Or,the wire and FFC is faulty.	Reinsert the following connector and reconnect the FFC. If there is no continuity, replace the wire. If the FFC terminal is deformed or the FFC is broken, replace the FFC. • LSU - Main PWB • Transfer high voltage PWB - Engine PWB	
5	Replacing the LSU	The LSU is faulty. (Due to the deformation of the FCC terminal of LSU,the laser does not emit light for one line.)	Replace the LSU.	(6) Procedures for cleaning the LSU light path (page 7-456)
6	Replacing the feed drive PWB	The feed drive PWB is faulty.	Replace the feed drive PWB.	
7	Replacing the transfer high voltage PWB	The transfer high voltage PWB is faulty.	Replace the transfer high voltage PWB.	
8	Replacing the engine PWB	The engine PWB is faulty.	Replace the engine PWB.	
9	Replacing the main PWB	The main PWB is faulty.	Replace the main PWB.	

(6-7)Blank image

Step	Check description	Assumed cause	Measures	Reference
1	Executing U140	The setting value of the developer bias is improper.	Execute U140 and reset the developer bias to the default value.	
2	Checking the developer bias contact	The developer bias contact is dirty or deformed.	Clean the developer bias contact,or correct its shape so that it grounds securely.	Developer bias contacts and MC high voltage contacts (page 7-451)
3	Replacing the developer unit	The developer drive gear is faulty.	Replace the developer unit.	
4	Checking the connection	The connector is not connected properly,or the wire is faulty.	Clean the terminals of the electric wire connector below and reinsert them. If there is no continuity,replace the wire. • Developer K / Transfer Belt Motor - Image Drive PWB • Developing Clutch - Image Drive PWB	
5	Checking the developer K/ transfer belt motor	The developer K / transfer belt motor is not working properly.	Execute U030 [DLP (K)] and check the operation of the developer K / transfer belt motor. If it does not work properly,reattach the Developer K / Transfer Belt Motor and reinsert the connector. If it is not repaired,replace it.	
6	Checking the developer clutch	The developer clutch does not operate properly.	Execute U032 [DLP] and check the operation of the developing clutch. If it does not work properly,reattach the developing clutch and reinsert the connector.	
7	Checking the main drive unit	The developer roller does not rotate since drive of the main drive unit is not transmitted. Or,the drum does not rotate since drive of the main drive unit (drum motor) is not transmitted.	If the developer roller,the gear/coupling of the main drive unit which transfer the drive to the drum or the drive shaft,etc. are not attached properly,repair them. If they are damaged,replace them.	(5) Procedures for cleaning the shaft of the developer roller and DS pulleys (page 7-455)
8	Checking the primary transfer bias contact	The primary transfer bias contact is dirty or deformed.	Clean the primary transfer bias contact. Or,correct its shape so that it grounds securely.	Primary transfer bias contacts and Primary transfer cleaning bias contacts and Secondary transfer current contact (page 7-452)

Step	Check description	Assumed cause	Measures	Reference
9	Replacing the drum unit	The ground plate in the drum is deformed,and cantbegrounded.'	Check the continuity of the drum and the frame,if there is no continuity,replace drum unit.	(7) Refastening the screw for fixing the ground plate (page 7-456)
10	Checking the transfer high voltage contacts	The transfer high voltage contacts are dirty or deformed.	Clean the transfer high voltage contacts. Or correct it so that it is firmly grounded.	Transfer high voltage contacts (Transfer high voltage PWB) (page 7-454)
11	Checking the connection	The connector is not connected properly,or the wire is faulty.	Reinsert the following connector. If there is no continuity, replace the wire. • Main high - voltage PWB - Image drive PWB • Image drive PWB - Engine PWB • Transfer high voltage PWB - Engine PWB	
12	Checking the connection	FFC terminal is not connected properly. Or,FFC is faulty.	Reconnect the following FFC. If the FFC terminal is deformed or the FFC is broken, replace the FFC. • LSU (APC PWB) - Main PWB	
13	Replacing the LSU	APC PWB of LSU is faulty.	Replace the LSU.	
14	Replacing the main high voltage PWB	Bias voltage is not output uniformly from the main high voltage PWB.	Replace the main high voltage PWB.	
15	Replacing the image drive PWB	The image drive PWB is faulty.	Replacing the image drive PWB	
16	Replacing the transfer high voltage PWB	The transfer high voltage PWB is faulty.	Replace the transfer high voltage PWB.	
17	Replacing the engine PWB	The engine PWB is faulty.	Replace the engine PWB.	
18	Replacing the main PWB	The main PWB is faulty.	Replace the main PWB.	

(6-8)Toner dirt

Step	Check description	Assumed cause	Measures	Reference
1	Executing the Laser Scanner Cleaning	Toner drops from the cleaning fur brush of the primary transfer unit.	Perform laser scanner cleaning several times. (High - density printing eliminates toner clogging of the cleaning fur brush.)	
2	Executing Developer refresh	Toner drops off from the developer unit.	Execute developer Refresh > Calibration in the system menu.	
3	Checking the developer unit	Toner drops off from the developer unit.	Clean the exterior of the developing unit with a dry cloth.	
4	Replacing the primary transfer unit	The transfer belt reaches to its life.	If the [Mid (Cnt)] value of U127 is 600,000 or more,replace the primary transfer unit.	

(6-9)Periodic toner dirt

Step	Check description	Assumed cause	Measures	Reference
1	Executing Drum refresh	The drum surface is dirty.	Execute Drum refresh.	

Step	Check description	Assumed cause	Measures	Reference
2	Checking the main charger roller unit	There is dirt or foreign object on the MC roller surface. Or,the shaft is corroded.	In case of occurring the image failure at the circumference pitch of the MC roller,clean the surface of the MC roller with a dry cloth. If it does not improve,replace the charger roller unit.	
3	Replacing the drum unit	There are some scratches on the drum surface.	In case of occurring the image failure at the circumferential pitch of the drum,replace the drum unit.	
4	Checking the developer unit	There is dirt,foreign object or scratch on the developing roller.	In case of occurring the image failure at the circumferential pitch of the developing roller,clean the developing roller with a dry cloth. If it does not improve,replace the developing unit.	

(6-10)No image comes out (Black)

Step	Check description	Assumed cause	Measures	Reference
1	Reinstalling the charger roller unit and drum unit	The charger roller unit or drum unit is not installed properly.	Reattach the main charger roller unit to the drum unit and reinstall the drum unit into the main unit to ensure secure contact .	
2	Replacing the drum unit	The cleaning blade winds up and is caught between the MC roller and the drum.	Replace the drum unit.	
3	Checking the main charger high voltage contact	The charger high voltage contacts are dirty or deformed (no charger bias is applied).	Clean the charged high voltage contacts. Also,modify the contacts to ensure grounding.	Developer bias contacts and MC high voltage contacts (page 7-451)
4	Checking the main high voltage contact	The high voltage contact of the main high voltage PWB is dirty or deformed.	Clean the main high voltage contacts and make corrections to ensure grounding. Or, reattach the main high voltage PWB.	Main high voltage contacts (Main high voltage PWB) (page 7-453)
5	Checking the connection	The connector is not connected properly,or the wire is faulty.	Reinsert the following connector. If there is no continuity, replace the wire. • Main high voltage PWB - Image drive PWB • Image drive PWB - Engine PWB	
6	Checking the connection	FFC terminal is not connected properly. Or,FFC is faulty.	Clean the following FFC and reconnect it. If the FFC terminal is deformed or the FFC is broken, replace the FFC. • LSU (APC PWB) - Main PWB	
7	Replacing the LSU	APC PWB of LSU is faulty.	Replace the LSU.	
8	Replacing the main high voltage PWB	Bias voltage is not output uniformly from the main high voltage PWB.	Replace the main high voltage PWB.	
9	Replacing the image drive PWB	The image drive PWB is faulty.	Replacing the image drive PWB	
10	Replacing the engine PWB	The engine PWB is faulty.	Replace the engine PWB.	
11	Replacing the main PWB	The main PWB is faulty.	Replace the main PWB.	

(6-11)Horizontal streaks, band (White, black)

Step	Check description	Assumed cause	Measures	Reference
1	Executing Developer refresh	The last image remains on the developer roller surface.	Execute developer Refresh > Calibration in the system menu.	
2	Executing Drum refresh	The drum surface is dirty.	Execute Drum refresh.	
3	Checking the developer bias contact	The developing bias is leaking due to the dirt or the deterioration of the developing bias contact.	Clean the developer bias contact.	Developer bias contacts and MC high voltage contacts (page 7-451)
4	Checking the developer unit	The developing bias is leaking due to the dirt or the deterioration of the developing roller shaft.	Clean the rear end of the developing roller shaft with a dry cloth. If it does not improve,replace the developing unit.	
5	Checking the main charger roller unit	The MC roller surface is dirty or scratch.	In case of occurring the image failure at the circumference pitch of the MC roller,clean the surface of the MC roller with a dry cloth. If it does not improve,replace the charger roller unit.	
6	Replacing the drum unit	Scratches or pinholes are on the drum surface,which makes leakage.	Replace the drum unit.	
7	Checking the primary transfer bias contact	The primary transfer bias contact is dirty or deformed.	Clean the primary transfer bias contact. Or, correct its shape so that it grounds certainly. If it is not fixed, replace the primary transfer unit.	Primary transfer bias contacts and Primary transfer cleaning bias contacts and Secondary transfer current contact (page 7-452)
8	Checking the connection	The connector is not connected properly. The foreign objects adhere on the connector terminal which makes contact failure. Or,the wire is faulty.	Clean the terminals of the electric wire connector below and reinsert them. If there is no continuity, replace the wire. • Main high voltage PWB - Image drive PWB • Image drive PWB - Engine PWB	
9	Replacing the main high voltage PWB	Bias voltage is not output uniformly from the main high voltage PWB.	Replace the main high voltage PWB.	
10	Replacing the image drive PWB	The image drive PWB is faulty.	Replacing the image drive PWB	
11	Replacing the engine PWB	The engine PWB is faulty.	Replace the engine PWB.	

(6-12)Irregular horizontal white streaks, white spots

Step	Check description	Assumed cause	Measures	Reference
1	Executing U140	The developing bias setting does not match the installation environment.	Execute U140 [Altitude Adj] and set the proper altitude.	
2	Checking the main charger high voltage contact	The charger high voltage contacts are not grounded	Correct the charged high voltage contacts to ensure grounding.	Developer bias contacts and MC high voltage contacts (page 7-451)
3	Checking the drum unit and the developer unit	The drum unit is not properly installed,so it does not ground the drum drive shaft.	Reinstall the drum unit.	
4	Replacing paper	Paper with the high surface resistance is used.	Replace with the recommended paper.	

(6-13)Horizontal uneven density

Step	Check description	Assumed cause	Measures	Reference
1	Executing Drum refresh	Toner smudges in the shape of a streak are on both ends of the drum surface.	Execute Drum refresh.	
2	Executing Developer refresh	The developer powder in the developer unit is deteriorated.	Execute developer Refresh > Calibration in the system menu.	
3	Checking the main charger roller unit	The rotation of the MC roller is uneven. Or,the MC cleaning roller is deformed.	Reinstall the charger roller unit. If it does not improve,replace the charger roller unit.	
4	Replacing the drum unit	The drum surface is worn down.	Replace the drum unit.	
5	Cleaning the developing bias contact	The conduction is not stabilized due to the dirty developer bias contact.	Clean the developer bias contact.	Developer bias contacts and MC high voltage contacts (page 7-451)
6	Checking the developer unit	The DS pulley is dirty or abnormal. The carrier in the developing unit has deteriorated.	Clean the DS pulleys at both ends of the developing unit. If it does not improve,replace the developing unit.	
7	Replacing the LSU	The laser emission is uneven.	Replace the LSU.	

(6-14)Image is missing partly

Step	Check description	Assumed cause	Measures	Reference
1	Executing Drum refresh	The drum surface is dirty.	Execute Drum refresh.	
2	Replacing the primary transfer unit	The primary transfer roller is dirty or deformed	Replace the primary transfer unit.	
3	Checking the developer roller	The developer roller does not return to the setting position,or the developer roller at the machine rear side does not contact the drum since the developer roller pressing wire is faulty.	Return the developer roller to the original position. Also,if the machine rear side of the developer roller does not contact the drum,replace the developer unit.	(5) Procedures for cleaning the shaft of the developer roller and DS pulleys (page 7-455)

(6-15)Offset

Step	Check description	Assumed cause	Measures	Reference
1	Executing Drum refresh	The drum surface is dirty.	Execute Drum refresh.	
2	Replacing the drum unit	The drum surface is worn down or scratched.	Replace the drum unit.	
3	Checking the developer unit	The developing roller is dirty. The surface of the developing roller is worn or scratched.	Clean the developing roller with a dry cloth. If it does not improve,replace the developing unit.	

(6-16)Gradation reproducibility is low

Step	Check description	Assumed cause	Measures	Reference
1	Adjusting the image	The calibration or gradation adjustment is not executed.	Execute [Gradation adjustment] (including calibration execution) from the system menu.	

(6-17)Blurred image

Step	Check description	Assumed cause	Measures	Reference
1	Executing Drum refresh	The drum surface has condensation.	Execute Drum refresh.	
2	Executing the Laser Scanner Cleaning	The LSU dustproof glass is dirty.	Execute Laser Scanner Cleaning.	
3	Replacing the LSU	The LSU dustproof glass is deteriorated.	Replace the LSU.	

(6-18)Light vertical black streaks at both edge of paper which is outside of the image area

Step	Check description	Assumed cause	Measures	Reference
1	Executing Developer Refresh	Toner outside the developing area width (311mm) of the developing roller flies and is transferred to the drum side. As a result,light vertical black streaks appears on both ends (out of the image area) of the SRA3 paper which is wider than the developing area width.	As a mitigation measure,execute developer refresh in the system menu. Then perform the calibration.	
2	Explanation for user	Toner outside the developing area width (311mm) of the developing roller flies and is transferred to the drum side. As a result,light vertical black streaks appears on both ends (out of the image area) of the SRA3 paper which is wider than the developing area width.	Explain to the user that it is a vertical black streak which is outside the image area and can not be completely eliminated. (It will not be completely eliminated by exchanging the developing unit,etc.). "SRA 3 (450 x 320 mm) is the paper width that can be printed in the margin" Line for marking design work and marking for cutting (registration mark) ". The location where this vertical black streak occurs is outside the [registration mark] and it is not an image area. therefore,there is no problem in actual use."	

(6-19)Vertical streaks or bands

Step	Check description	Assumed cause	Measures	Reference
1	Executing Drum refresh	The drum surface is dirty.	Execute Drum refresh.	
2	Checking the main charger roller unit	Streaky stains are attached to the surface of the MC roller. Or,the surface of the MC roller is streaked.	Clean the surface of the MC roller with a dry cloth. If it does not improve,replace the charger roller unit.	
3	Replacing the drum unit	The cleaning blade or drum surface is worn out.	Replace the drum unit. (If the U110 drum counter is above a certain value (600,0000),the cleaning blade is worn.)	
4	Checking the developer unit	Foreign objects and aggregated toner adhere to the developing roller surface.	Clean the developing roller with a dry cloth. If it does not improve,replace the developing unit.	
5	Checking the primary transfer unit	The transfer belt is scratched or foreign objects adhere.	Clean the transfer belt with a dry cloth. If it does not improve,replace the primary transfer unit.	

(6-20)Vertical uneven density

Step	Check description	Assumed cause	Measures	Reference
1	Executing Drum refresh	The drum surface has condensation.	Execute Drum refresh.	
2	Executing Developer refresh	The toner layer on the developer roller is uneven.	Execute developer Refresh > Calibration in the system menu.	
3	Checking the primary transfer unit	The transfer belt is not evenly in contact with the drum. (The primary transfer roller does not evenly press the transfer belt against the drum.)	Reinstall the primary transfer unit. If it does not improve,replace the primary transfer unit.	
4	Checking the main charger roller unit	Streaky dirt adheres to the surface of the MC roller.	Clean the surface of the MC roller with a dry cloth. If it does not improve,replace the charger roller unit.	
5	Replacing the drum unit	The drum surface is worn down.	Replace the drum unit.	
6	Replacing the developer unit	The toner layer on the developer roller is uneven.	Replace the developer unit.	
7	Replacing the LSU	LSU emits the laser unevenly. (Inner mirror comes off.)	Replace the LSU.	
8	Installing the cassette heater	The cassette heater is not installed in the high humidity environment.	Perform printing on the paper immediately after opening and check if there is any difference in the phenomenon. If there is no problem with the paper immediately after opening,consider installing a cassette heater.	

(6-21)Vertical streaks, band (white)

Step	Check description	Assumed cause	Measures	Reference
1	Executing the Laser Scanner Cleaning	The LSU dustproof glass is dirty.	Execute Laser Scanner Cleaning.	
2	Executing Drum refresh	The drum surface is dirty.	Execute Drum refresh.	
3	Replacing the developer unit	Foreign objects and aggregated toner are mixed in the developer unit.	Replace the developing unit. Next,check the replenishment port (shutter part) of the toner container,and remove any coagulated toner if it adheres.	
4	Checking the main charger roller unit	There is dirt,foreign object or scratch on the MC roller.	Clean the surface of the MC roller with a dry cloth. If it does not improve,replace the charger roller unit.	
5	Replacing the drum unit	There are some scratches on the drum surface.	Replace the drum unit.	
6	Removing foreign material	There are foreign objects on the laser path of the LSU.	Remove the drum unit and developing unit,and clean the irradiation port on the left side of the drum heater.	(6) Procedures for cleaning the LSU light path (page 7-456)
7	Replacing the LSU	Foreign objects are on the mirrors inside the LSU.	Replace the LSU.	

(6-22)Uneven halftone image

Step	Check description	Assumed cause	Measures	Reference
1	Checking the primary transfer unit	There is a foreign object on the transfer belt. The meandering of the transfer belt causes unevenness on the transfer belt.	Clean the surface of the transfer belt with a dry cloth. If it does not improve,replace the primary transfer unit.	

7 - 2 Feeding/Conveying Failures

(1)Prior standard check items

No.	Contents
(1-1)	Paper jam due to the cover-open detection
(1-2)	Paper jam due to the wave or curl in the fuser section of the damp paper
(1-3)	Paper jam due to the dog-ear, paper skew, paper creases, fusing failure or the paper curl
(1-4)	Paper jam due to the guide
(1-5)	Paper jam caused by improperly loaded paper in the cassette
(1-6)	Paper jam due to the inferior paper
(1-7)	-Paper jam from the factor of the conveying roller, motor or clutch
(1-8)	Paper jam due to the sensor
(1-9)	Paper jam due to the setting / detection failure
(1-10)	Paper jam due to the static electricity
(1-11)	Paper jam caused by the installation environment (Papers inside the cassette are always damp.)

Content of Feeding/Conveying Failures

(1-1)Paper jam due to the cover-open detection

Step	Check description	Assumed cause	Measures	Reference
1	Checking the conveying unit	Each conveying units are not properly attached.	Check if the front / back or left / right of the vertical conveying section and the horizontal conveying section do not open pulling by a slight strength. If necessary, reattach them.	
2	Opening and reclosing the right cover	The right cover is not aligned to the other exterior covers.	Open the right cover and close it again securely.	

(1-2)Paper jam due to the wave or curl in the fuser section of the damp paper

Step	Check description	Assumed cause	Measures	Reference
1	Checking paper	The paper curls.	Reload paper upside down.	
2	Checking paper	The paper fanning is not enough.	Fan the paper well and load it by reversing the paper direction	
3	Checking paper	The paper is damp.	Replace the paper.	

(1-3)Paper jam due to the dog-ear, paper skew, paper creases, fusing failure or the paper curl

Step	Check description	Assumed cause	Measures	Reference
1	Checking the paper path and the paper	The paper is caught with a piece of paper, etc. Or the leading edge of the sheet is bent.	When the dog-ear occurs, check if a piece of torn paper, foreign materials or the burrs on the part do not exist on the paper path, and remove them.	
2	Fuser temperature setting	The paper curls since the fuser temperature is improper.	Reset the fuser temperature to the default value at U161 [Warm Up] or [Print] when the paper curls.	
3	Checking paper	The paper fanning is not enough or the cutting edge of loaded paper is damaged.	Fan the paper well and load it by reversing the paper direction. Correct or replace paper if a dog-ear is found.	
4	Checking paper	The paper is wavy.	Correct or replace paper. If you cannot get user agreement about the paper replacement, relocate the leading end of paper and the trailing end or reload paper upside down.	
5	Checking paper	Unspecified paper is used or foreign materials are on the paper.	Ask a user to use the specified paper type. Or, remove the paper with foreign materials.	

(1-4)Paper jam due to the guide

Step	Check description	Assumed cause	Measures	Reference
1	Checking the paper path	The paper is caught with a piece of paper, etc.	Remove any paper or foreign materials on the paper path and remove the burrs on the parts such as the guide or the actuator.	
2	Checking the guide	The guide is dirty.	If the guide or the discharge needle is dirty by the toner, the paper dust, etc., clean by the waste cloth or the brush.	
3	Checking the guide	The guide does not properly operate due to the incorrect attachment or a fault.	Check the guide, and remove any burrs. Also, if the guide does not operate smoothly manually, reattach the guide. Then, replace the guide if it is not fixed or if there is deformation or frictional wear.	
4	Checking the solenoid	The solenoid does not operate properly.	Execute U033 and check if the guide can move smoothly by the operation sounds. If the guide does not operate thoroughly or smoothly, reattach the guide. And, replace the solenoid if the issue is not resolved.	

(1-5)Paper jam caused by improperly loaded paper in the cassette

Step	Check description	Assumed cause	Measures	Reference
1	Relocating the paper width guides	The locations of the paper width guides do not fit with the paper size.	Relocate the paper width guides or the MP paper width guides along the paper size when the paper skew or the paper creases occur.	
2	Checking paper	The paper fanning is not enough.	Fan paper and reload it in the paper source. If a part of the paper is bent, remove it.	
3	(When feeding the paper from the large capacity feeder) Checking paper	The paper is not properly loaded.	When the paper is loaded over the guide in the cassette of the large capacity paper feeder, reload the paper so the paper edge is not on the bump in the cassette.	

(1-6)Paper jam due to the inferior paper

Step	Check description	Assumed cause	Measures	Reference
1	Checking paper	Unspecified papers are used.	Explain to the user to use the paper within the specifications.	

(1-7)Paper jam from the factor of the conveying roller, motor or clutch

Step	Check description	Assumed cause	Measures	Reference
1	Checking the roller or the pulley	The roller or surface of the pulley is dirty, or faulty.	Check if the rollers or the pulleys have no paper dust, toner, foreign materials, diameter change or frictional wear, and clean their surface. If not repaired, replace the parts.	
2	Checking the motor	The motor does not operate properly.	Execute U030 (main unit), U240 (finishers) or U243 (document processors) to check the related motor operation. If the motor does not operate properly, perform the field measures of each paper jam code.	
3	Checking the clutch	The clutch does not operate properly.	Execute U032 (main unit), U243 (dual scan DP) to check the clutch operation. If the clutch does not operate properly, reattach it and reconnect the connector. If not repaired, replace the individual clutch or the unit containing the clutch.	
4	Cleaning the roller shaft and the bearings	The roller shaft or the bearings are dirty.	If a load is given to the roller rotation caused by the dirt of the roller shaft or the bearings, clean.	
5	Checking the spring	The spring does not press the conveying roller or pulley properly.	Check if the spring is dropping off or the roller and the pulley are pressed properly, then reattach them if necessary.	

(1-8)Paper jam due to the sensor

Step	Check description	Assumed cause	Measures	Reference
1	Checking the actuator and the recovery spring	The actuator or the return spring does not operate correctly.	If the actuator is caught or came off, reattach the actuator or recovery spring.	
2	Cleaning the sensor	The sensor is dirty.	When the sensor surface or photoreceptor black felt is dirty by paper dust, etc., clean them.	
3	Checking the sensor	The sensor does not operate correctly.	Check the sensor operation by executing U031 (main unit), U241 (finishers) or U244 (document processor). If the sensor does not operate properly, clean and reattach it, then reinsert the connector. If not repaired, replace it.	

(1-9)Paper jam due to the setting / detection failure

Step	Check description	Assumed cause	Measures	Reference
1	Checking the paper leading edge margin	The leading edge margin is not enough.	When there is no margin from the paper leading edge to 4.0mm(+1.5/-0.0mm) and also there is no check line on 20mm(+/-1mm) from the paper leading edge of the test pattern output at U034 [Start Position] (In case that the fuser jam occurs), adjust the paper leading edge timing at U034 and then adjust the leading margin at U402 [Lead].	
2	Relocating the paper width guides	The paper size is misdetected.	Relocate the paper width guides or the MP paper width guides along the paper size to properly detect the paper size.	
3	Checking the settings	The media type is not properly set.	If the media type setting does not matched the actual paper weight (the paper jam occurs due to the paper separation failure),set the media type at [System Menu/ Counter] key > [Common Settings] > [Org./ Paper Set] in the System Menu.	

(1-10)Paper jam due to the static electricity

Step	Check description	Assumed cause	Measures	Reference
1	Checking the ground	The static electricity accumulates.	When the main unit is installed in the low humidity environment where the static electricity easily accumulates on the conveying guide during the continuous printing, check if the discharge sheet in the exit section and the metal guide in the transfer section are grounded securely. Reattach them if necessary.	

(1-11)Paper jam caused by the installation environment (Papers inside the cassette are always damp.)

Step	Check description	Assumed cause	Measures	Reference
1	Checking the paper storage place	Papers have been stored in the improper place.	Ask users to store paper in a dry place.	
2	Installing the cassette heater	The paper is damp.	Install the cassette heater and set the mode by executing U327.	

(2)Paper mis-feed detection

(2-1)Paper mis-feed indication

When a paper mis-feed occurs, the machine immediately stops printing and displays the paper mis-feed message on the operation panel. To remove paper mis-fed in the machine, pull out the cassette, open the front cover or paper conveying cover.

The locations are displayed on the operation panel when a paper jam has occurred.

Jam location indication

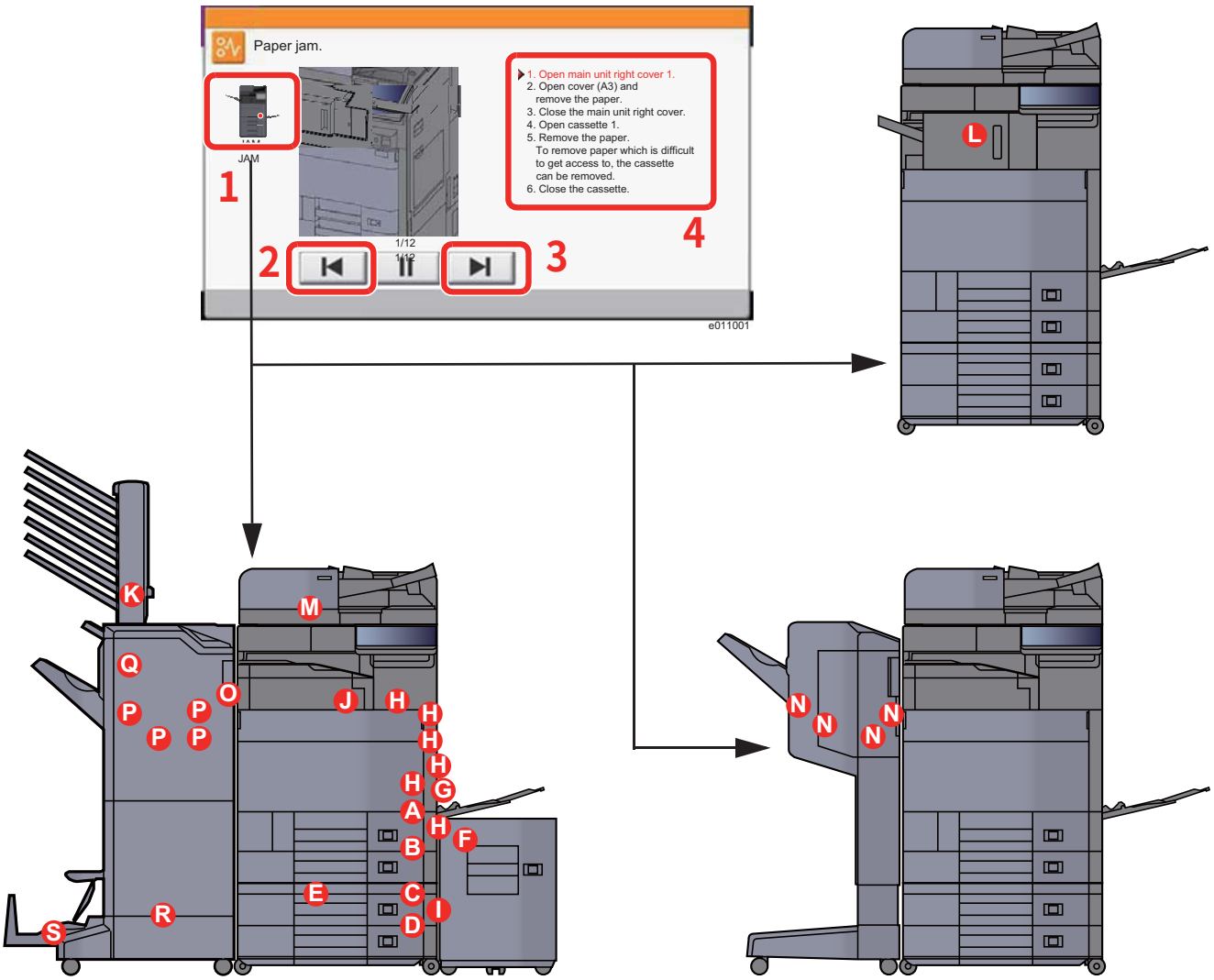

1 Shows the location of a paper jam.

2 Shows the previous step.

3 Shows the next step.

4 Shows the removal procedure.

Display	Jam location
A	Cassette 1
B	Cassette 2
C	Cassette 3(500-sheet×2)
	Cassette 3 (1,500-sheet×1)

D	Cassette 4 (500-sheet×2)
E	Cassette 4 (1,500-sheet×2)
F	Cassette 5 (Side Feeder)
G	Multipurpose Tray
H	Right Cover 1
I	Right Cover 2
J	Bridge Unit
K	Mailbox
L	Inner Finisher
M	Document Processor
N	1,000-sheet Finisher
O	4,000-sheet Finisher/100-sheet Staple Finisher (Inner)
P	4,000-sheet Finisher/100-sheet Staple Finisher (Tray A)
Q	4,000-sheet Finisher/100-sheet Staple Finisher (Tray B)
R	Folding Unit
S	Folding Tray

(2-2)Paper mis-feed detection condition

Main unit + Optional unit

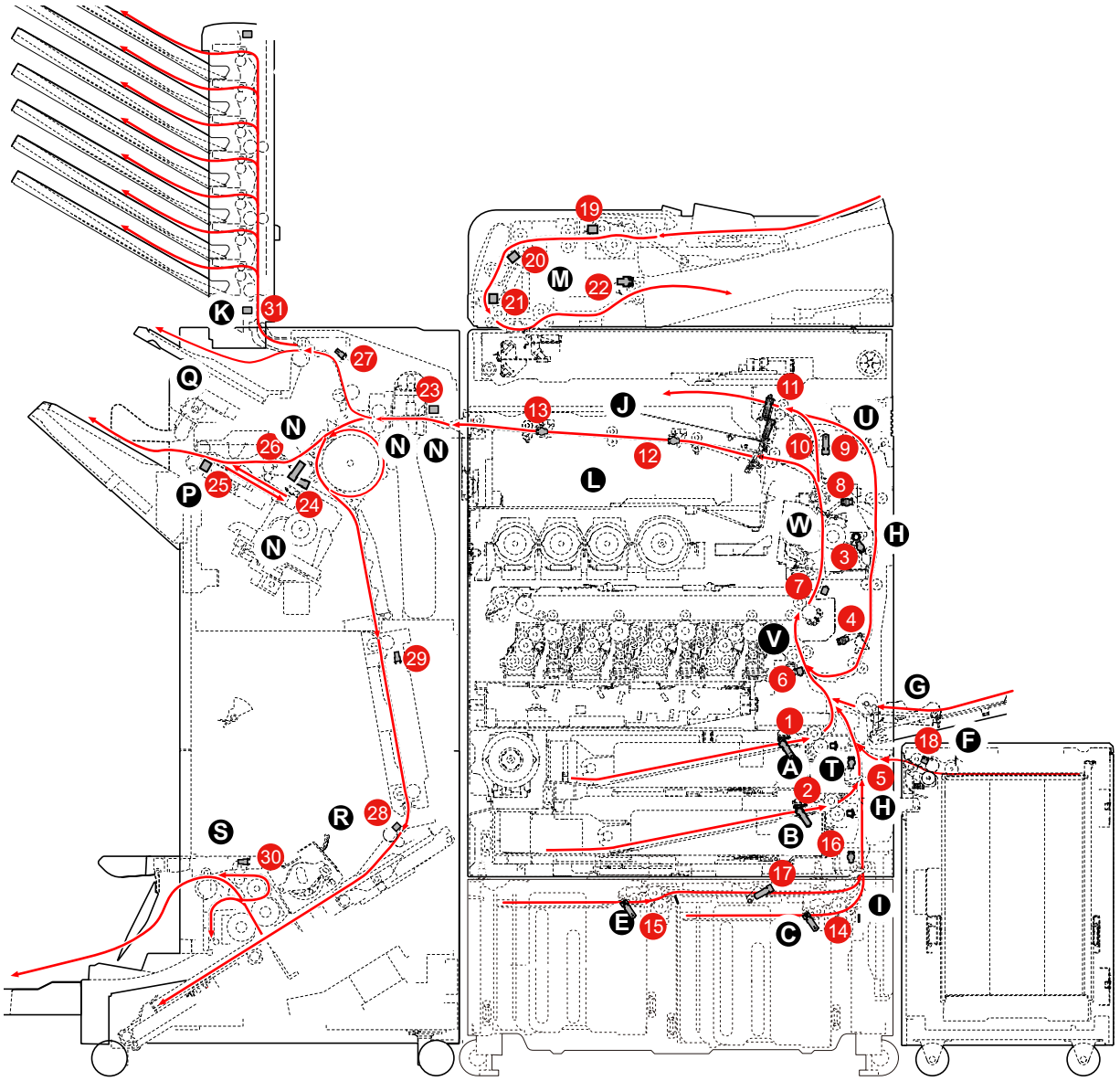

Item	Sensor name	Item	Sensor name	Item	Sensor name
1	Paper sensor 1	12	BR conveying sensor 1	23	DF entry sensor
2	Paper sensor 2	13	BR conveying sensor 2	24	DF middle sensor
3	DU sensor 1	14	PF paper sensor 1	25	DF exit sensor
4	DU sensor 2	15	PF paper sensor 2	26	DF drum sensor
5	Conveying sensor	16	PF vertical conveying sensor	27	DF sub exit sensor
6	Registration sensor	17	PF horizontal conveying sensor	28	BF entry sensor
7	Belt roll-up sensor	18	PF feed sensor	29	BF vertical conveying sensor
8	Fuser sensor	19	DP feed sensor	30	BF exit sensor
9	Exit reversing sensor	20	DP backside timing sensor	31	MT tray exit sensor
10	Lower exit full sensor	21	DP timing sensor		
11	Upper exit full sensor	22	DP exit sensor		

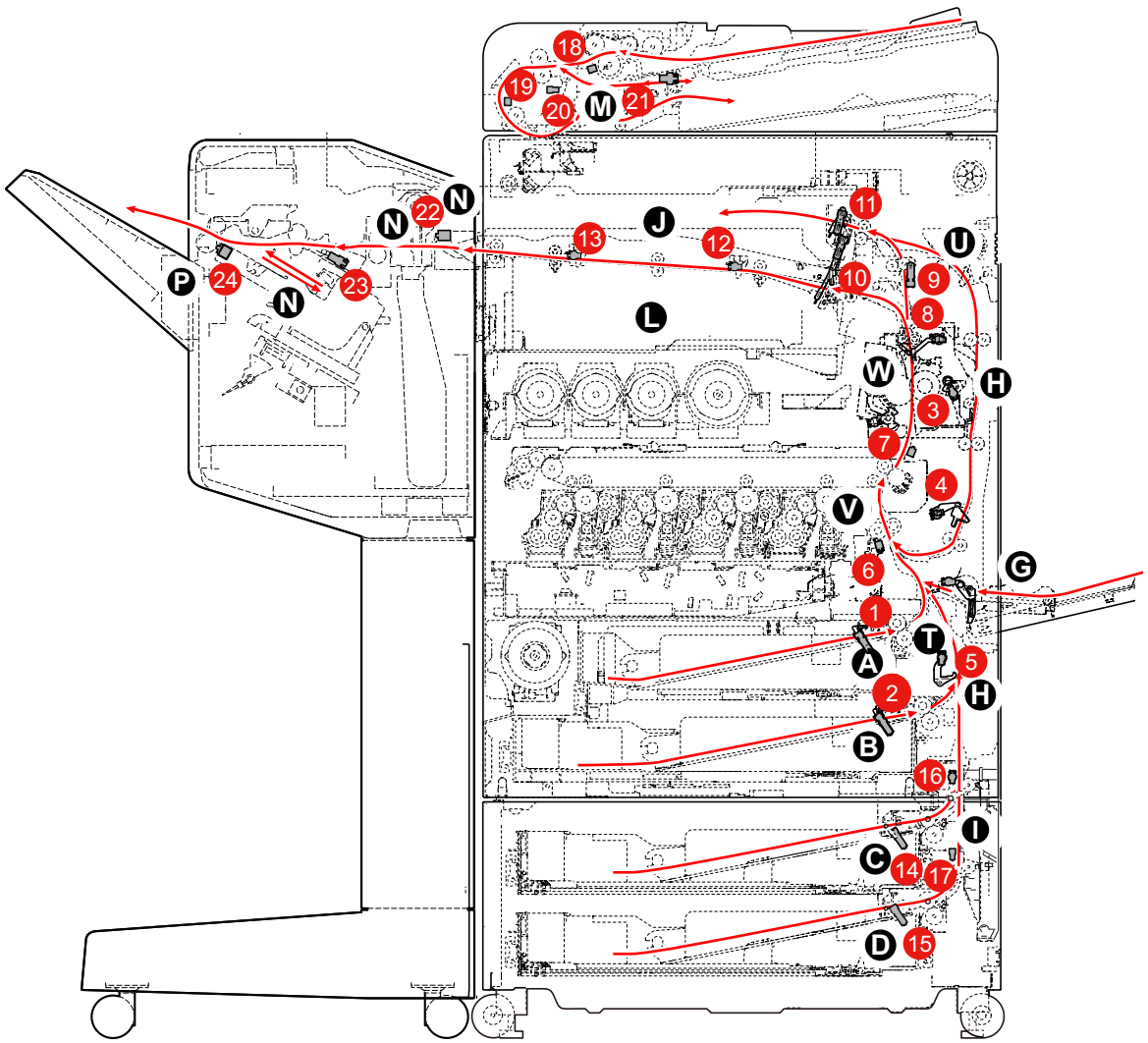

Item	Sensor name	Item	Sensor name	Item	Sensor name
1	Paper sensor 1	9	Exit reversing sensor	17	PF conveying sensor 2
2	Paper sensor 2	10	Lower exit full sensor	18	DP feed sensor
3	DU sensor 1	11	Upper exit full sensor	19	DP backside timing sensor
4	DU sensor 2	12	BR conveying sensor 1	20	DP timing sensor
5	Conveying sensor	13	BR conveying sensor 2	21	DP exit sensor
6	Registration sensor	14	PF paper sensor 1	22	DF entry sensor
7	Belt roll-up sensor	15	PF paper sensor 2	23	DF middle sensor
8	Fuser sensor	16	PF conveying sensor 1	24	DF exit sensor

Error code and JAM location

JAM code	JAM location	JAM code	JAM location	JAM code	JAM location
J0000	-	J4005	T	J4319	U
J0100	-	J4011		J4401	U
J0101	-	J4012	V	J4402	U
J0104	-	J4013	V	J4403	U
J0105	-	J4014	V	J4404	U
J0106	-	J4015	V	J4405	U
J0107	-	J4101	V	J4409	U
J0110	-	J4102	V	J4701	W
J0111	-	J4103	V	J4702	W
J0114	-	J4104	V	J4703	W
J0212	-	J4105	V	J4704	W
J0213	-	J4108	V	J4705	W
J0300	-	J4109	V	J4709	W
J0501	A	J4111	W	J4711	U
J0502	B	J4112	W	J4712	U
J0503	C	J4113	W	J4713	U
J0504	D	J4114	W	J4714	U
J0508	U	J4115	W	J4715	U
J0509	G	J4118	W	J4719	U
J0511	V	J4119	W	J4901	O
J0512	T	J4201	W	J4902	O
J0513	T	J4202	W	J4903	O
J0514	T	J4203	W	J4904	O
J0518	V	J4204	W	J4905	O
J0519	V	J4205	W	J4908	O
J0523	C	J4208	W	J4909	O
J0524	E	J4209	W	J4911	J
J0533	C	J4211	W	J4912	J
J0534	E	J4212	W	J4913	J
J0545	F	J4213	W	J4914	J
J0555	F	J4214	W	J4915	J
J0566		J4215	W	J4918	J
J0567		J4218	W	J4919	J
J0576		J4219	W	J5001	J
J0577		J4301	U	J5002	J
J1403	C	J4302	U	J5003	J
J1404	E	J4303	U	J5004	J
J1413	I	J4304	U	J5005	J
J1414	I	J4305	U	J5008	J
J1604	I	J4309	U	J5009	J
J1614	I	J4311	U	J5011	J
J4001		J4312	U	J5012	J
J4002	T	J4313	U	J5013	J
J4003	T	J4314	U	J5014	J
J4004	T	J4315	U	J5015	J

JAM code	JAM location	JAM code	JAM location	JAM code	JAM location
J5018	J	J7000	N	J9006	M
J5019	J	J7001	N	J9007	M
J6000	N	J7002	L	J9008	M
J6001	N	J7100	R	J9009	M
J6002	N	J7110	R	J9010	M
J6012	N	J7200	R	J9011	M
J6020	-	J7210	R	J9020	M
J6021	-	J7300	R	J9030	M
J6030	N	J7310	S	J9031	M
J6040	R	J7400	R	J9050	M
J6041	-	J7500	R	J9110	M
J6050	-	J7600	R	J9200	M
J6060	-	J7700	R	J9210	M
J6070	-	J7710	R	J9300	M
J6080	-	J7800	K	J9310	M
J6100	J	J7810	K	J9400	M
J6101	J	J7900	N	J9410	M
J6102	J	J7901	N	J9600	M
J6110	N	J7902	L	J9610	M
J6200	N	J7911	N		
J6210	N	J7912	N		
J6300	N	J7913	N		
J6301	N	J7914	N		
J6310	N	J7915	N		
J6311	N	J7916	N		
J6400	N	J7917	N		
J6401	N	J7918	N		
J6402	N	J7919	N		
J6410	P	J7920	N		
J6411	P	J7921	N		
J6412	P	J7922	N		
J6500	N	J7923	N		
J6510	N	J7924	N		
J6511	N	J7925	N		
J6512	P	J7930	-		
J6600	N	J7931	-		
J6610	N	J7932	-		
J6700	N	J7933	-		
J6710	N	J7934	-		
J6810	N	J7935	-		
J6811	N	J9000	M		
J6812	L	J9001	M		
J6910	N	J9002	M		
J6911	N	J9004	M		
J6912	L	J9005	M		

(3)Jam Codes

Error code/ Contents
J0000: Power ON jam (page 7-90)
J0107: Fuser temperature stabilization time-out (page 7-90)
J0100/J0101/J0104/J0105/J0106: Paper jam caused by the firmware factor (page 7-90)
J0110/J0111/J0114: Cover open detection (page 7-91)
J0212/J0213: Right cover2 open detection (page 7-91)
J0300: Paper output completion non-detection jam (page 7-91)
J0501/J0502/J0503/J0504: Cassette no feed (Prior check item) (page 7-92)
J0501/J0502: No paper feed from cassette (page 7-92)
J0503/J0504: No paper feed from cassette (page 7-93)
J0501/J0502: No paper feed from cassette (page 7-94)
J0501/J0502: No paper feed from cassette (page 7-94)
J0503/J0504: No paper feed from cassette (page 7-95)
J0501/J0502/J0503/J0504: No paper feed from cassette 1 - 4 (page 7-95)
J0501/J0502/J0503/J0504: No paper feed from cassette 1 - 4 (page 7-96)
J0501/J0502: No paper feed from cassette (page 7-97)
J0503/J0504: No paper feed from cassette (page 7-98)
J0501/J0502: No paper feed from cassette (page 7-99)
J0503/J0504: No paper feed from cassette (page 7-99)
J0501/J0502: No paper feed from cassette (page 7-100)
J0503/J0504: No paper feed from cassette (page 7-101)
J0508: No paper feed from the duplex section (page 7-102)
J0508: No paper feed from the duplex section (page 7-103)
J0509: No paper feed from the MP tray (page 7-104)
J0509: No paper feed from the MP tray (page 7-105)
J0511: Multi-feeding from cassette (page 7-106)
J0512: Multi-feeding from cassette (page 7-107)
J0513/J0514: Multi-feeding from cassette (page 7-108)
J0518: Multi-feeding from the duplex section (page 7-109)
J0519: Multi-feeding from the MP tray (page 7-110)
J0523/J0524: No paper feed from the large capacity paper feeder (page 7-111)
J0523/J0524: No paper feed from the large capacity paper feeder (page 7-112)
J0533/J0534: Multi-feeding from the large capacity paper feeder (page 7-113)
J0545: No paper feed from the side feeder (page 7-114)
J0545: No paper feed from the side feeder (page 7-115)
J0555: Multi-feeding from the side feeder (page 7-116)
J0566: IS upper feed tray no feeding JAM (page 7-117)
J0567: IS lower feed tray no feeding JAM (page 7-117)
J0576: IS upper tray feed sensor stay JAM (page 7-118)
J0577: IS lower tray feed sensor stay JAM (page 7-118)
J1403/J1404: Feed sensor2 non-arrival JAM (page 7-119)
J1403/J1404: Feed sensor2 non-arrival JAM (page 7-120)
J1413/J1414: Feed sensor2 stay JAM (page 7-121)
J1604: PF conveying sensor 1 non-arrival jam (page 7-122)
J1604: PF vertical conveying sensor non-arrival jam (page 7-123)
J1604: PF conveying sensor 1 non-arrival jam (page 7-124)
J1604: PF vertical conveying sensor non-arrival jam (page 7-125)

Error code/ Contents
J1614: PF conveying sensor 1 stay jam (page 7-126)
J1614: PF vertical conveying sensor stay jam (page 7-127)
J4001/J4002/J4003/J4004/J4005: Regist sensor non-arrival JAM (page 7-128)
J4001/J4002/J4003/J4004/J4005: Regist sensor non-arrival JAM (page 7-129)
J4011/J4012/J4013/J4014/J4015: Regist sensor stay JAM (page 7-130)
J4101/J4102/J4103/J4104/J4105/J4108/J4109: Belt winding sensor non-arrival jam (page 7-131)
J4101/J4102/J4103/J4104/J4105/J4108/J4109: Belt winding sensor non-arrival jam (page 7-132)
J4101/J4102/J4103/J4104/J4105/J4108/J4109: Belt winding sensor non-arrival jam (page 7-133)
J4111/J4112/J4113/J4114/J4115/J4118/J4119: Belt winding sensor stay jam (page 7-134)
J4201/J4202/J4203/J4204/J4205/J4208/J4209: Fuser sensor non-arrival jam (page 7-135)
J4201/J4202/J4203/J4204/J4205/J4208/J4209: Fuser sensor non-arrival jam (page 7-136)
J4201/J4202/J4203/J4204/J4205/J4208/J4209: Fuser sensor non-arrival jam (page 7-136)
J4201/J4202/J4203/J4204/J4205/J4208/J4209: Fuser sensor non-arrival jam (page 7-137)
J4211/J4212/J4213/J4214/J4215/J4218/J4219: Fuser sensor stay jam (page 7-138)
J4211/J4212/J4213/J4214/J4215/J4218/J4219: Fuser sensor stay jam (page 7-139)
J4211/J4212/J4213/J4214/J4215/J4218/J4219: Fuser sensor stay jam (page 7-140)
J4211/J4212/J4213/J4214/J4215/J4218/J4219: Fuser sensor stay jam (page 7-141)
J4301/J4302/J4303/J4304/J4305/J4309: DU sensor 1 non-arrival jam (page 7-143)
J4311/J4312/J4313/J4314/J4315/J4319: DU sensor 1 stay jam (page 7-144)
J4401/J4402/J4403/J4404/J4405/J4409: DU sensor 2 non-arrival jam (page 7-145)
J4701/J4702/J4703/J4704/J4705/J4709: Exit reverse sensor non-arrival jam (page 7-147)
J4711/J4712/J4713/J4714/J4715/J4719: Exit reverse sensor stay jam (page 7-149)
J4901/J4902/J4903/J4904/J4905/J4908/J4909: BR conveying sensor 1 non-arrival jam (page 7-150)
J4911/J4912/J4913/J4914/J4915/J4918/J4919: BR conveying sensor 1 stay jam (page 7-151)
J5001/J5002/J5003/J5004/J5005/J5008/J5009: BR conveying sensor 2 non-arrival jam (page 7-152)
J5011/J5012/J5013/J5014/J5015/J5018/J5019: BR conveying sensor 2 stay jam (page 7-153)
J6000/J6001/J6002: DF paper entry failure jam (page 7-154)
J6012: Inner DF open jam (page 7-154)
J6020/J6021: DF front cover open jam (page 7-154)
J6030: DF staple jam (page 7-155)
J6040: Folding staple JAM (page 7-155)
J6041: DF top cover open jam (page 7-156)
J6050: BF tray open jam (page 7-156)
J6060: MT cover open jam (page 7-156)
J6070: Folding unit open JAM (page 7-156)
J6080: BF left cover open jam (page 7-157)
J6100/J6101/J6102: DF paper entry sensor non-arrival jam (page 7-157)
J6110/J6111/J6112: DF paper entry sensor stay jam (page 7-158)
J6200: DF sub eject sensor non-arrival JAM/DF entry timing sensor non-arrival JAM (page 7-159)
J6210: DF sub eject sensor stay JAM/DF entry timing sensor stay JAM (page 7-160)
J6300/J6301: DF middle sensor non-arrival JAM/DF sub eject sensor non-arrival JAM after the DF carry-in sensor is turned on, the DF middle sensor does not turn on even after a specified time has passed. (4,000 sheets finisher / 1,000 sheets finisher) (page 7-161)
J6310/J6311: DF middle sensor stay JAM/DF sub eject sensor stay JAM (page 7-162)
J6400/J6401: DF eject sensor non-arrival JAM (page 7-163)
J6400/J6401/J6402: DF middle sensor non-arrival jam (page 7-164)
J6410/J6411/J6412: DF exit sensor stay jam (page 7-164)
J6410/J6411/J6412: DF middle sensor stay jam (page 7-165)

Error code/ Contents
J6500: DF exit sensor non-arrival jam when exiting paper stack (page 7-166)
J6510/J6511/J6512: DF eject sensor stay JAM at bundle output (page 7-167)
J6600: DF drum sensor non-arrival jam (page 7-168)
J6610: DF drum sensor stay jam (page 7-169)
J6700: DF drum timing sensor non-arrival jam (page 7-170)
J6710: DF drum sensor stay jam during paper conveying into the folding unit (page 7-171)
J6810/J6811/J6812: DF width adjustment sensor1 JAM/DF bundle eject stay JAM (page 7-172)
J6910/J6911/J6912: DF side registration sensor 2 jam (page 7-173)
J7000/J7001/J7002: DF staple jam (page 7-173)
J7100: BF paper entry sensor non-arrival jam (page 7-174)
J7110: BF paper entry sensor stay jam (page 7-174)
J7200: BF exit sensor non-arrival jam (page 7-175)
J7210: BF exit sensor stay jam (page 7-175)
J7300: BF exit sensor non-arrival jam at tri-folding (page 7-176)
J7310: BF exit sensor stay jam at tri-folding (page 7-176)
J7400: Upper BF side registration jam (page 7-177)
J7500: Lower BF side registration jam (page 7-177)
J7600: BF staple jam (page 7-178)
J7710: BF vertical conveying sensor stay jam (page 7-179)
J7800: Mail Box exit non-arrival jam (page 7-180)
J7810: Mail Box exit stay jam (page 7-181)
J7900/J7901/J7902: DF paddle jam (page 7-181)
J7910: DF adjusting release motor jam (page 7-182)
J7911: DF pull-in guide release motor JAM (page 7-182)
J7912: DF withdraw pulley pressure release motor jam (page 7-183)
J7913: DF exit release motor jam (page 7-183)
J7914: DF shift motor 2 jam (page 7-184)
J7915: DF shift motor 1 jam (page 7-184)
J7916: DF shift release motor jam (page 7-185)
J7917: DF side registration motor 1 jam (page 7-185)
J7918: DF side registration motor 2 jam (page 7-186)
J7919: DF slide motor jam (page 7-186)
J7920: DF staple motor jam (page 7-187)
J7921: DF bundle eject motor1 JAM (page 7-187)
J7922: DF bundle eject motor2 JAM (page 7-188)
J7923: DF exit paddle motor jam (page 7-188)
J7924: DF exit paper press motor jam (page 7-189)
J7925: DF exit support guide motor jam (page 7-189)
J7930: DF required paper interval time data JAM (page 7-190)
J7931/J7932/J7933: DF eject data JAM1 (page 7-190)
J7934/J7935: DF required paper interval time cancel data JAM (page 7-191)
J9000: No original feed from the DP (page 7-192)
J9001: DP small size original jam (page 7-193)
J9002: Paper jam detected when starting the paper conveying (page 7-193)
J9004: DP registration sensor non-arrival jam during the original reversing (page 7-194)
J9005: No original feed from the DP (page 7-195)
J9006: DP exit sensor non-arrival jam during the original reversing (page 7-196)

Error code/ Contents
J9007: DP exit sensor stay jam during the original reversing (page 7-197)
J9009: DP original jam caused by the image scanning (page 7-198)
J9010: Document processor open detection (page 7-198)
J9011: DP top cover open detection (page 7-198)
J9020: Original skew jam (page 7-199)
J9030: Original multi feed jam (page 7-200)
J9031: Double feed detection error JAM (page 7-200)
J9050: Original flip up detection error JAM (page 7-201)
J9110: DP feed sensor multi-feeding jam (page 7-202)
J9200: DP registration sensor non-arrival jam (page 7-203)
J9210: DP registration sensor stay jam (page 7-204)
J9300: DP backside timing sensor non-arrival jam (page 7-205)
J9310: DP backside timing sensor stay jam (page 7-206)
J9400: DP timing sensor non-arrival jam (page 7-207)
J9410: DP timing sensor stay jam (page 7-208)
J9600: DP exit sensor non-arrival jam (page 7-209)
J9610: DP exit sensor stay jam (page 7-210)
JA000: Entry failure JAM (page 7-211)
JA010: IS front cover open detection (page 7-211)
JA020: IS right cover open detection (page 7-211)
JA100: IS entry sensor non-arrival JAM (page 7-212)
JA102: IS eject sensor non-arrival JAM1 (page 7-212)
JA103: IS eject sensor non-arrival JAM2 (page 7-213)
JA110: IS entry sensor stay JAM (page 7-213)
JA112: IS eject sensor stay JAM1 (page 7-214)
JA113: IS eject sensor stay JAM2 (page 7-214)
JA300: IS upper tray regist sensor non-arrival JAM (page 7-215)
JA301: IS lower tray regist sensor non-arrival JAM (page 7-216)
JA303: IS merge conveying sensor non-arrival JAM (page 7-217)
JA304: IS lower tray regist sensor non-arrival JAM2 (page 7-218)
JA310: IS upper tray regist sensor stay JAM (page 7-218)
JA311: IS lower tray regist sensor stay JAM1 (page 7-219)
JA313: IS marge conveying sensor stay JAM (page 7-219)
JA314: IS lower tray regist sensor stay JAM2 (page 7-220)
JA900: IS upper tray lift motor JAM (page 7-220)
JA901: IS lower tray lift motor JAM (page 7-221)
JA910: Paper attribute cancel JAM (page 7-221)
JB000: Entrance sensor non-arrival JAM (page 7-221)
JB010: Entrance sensor stay JAM (page 7-222)
JB100: Regist front sensor non-arrival JAM (page 7-222)
JB110: Regist front sensor stay JAM (page 7-223)
JB200: Regist sensor non-arrival JAM (page 7-223)
JB210: Regist sensor stay JAM (page 7-224)
JB300: Primary forward/reverse sensor non-arrival JAM (page 7-224)
JB310: Primary forward/reverse sensor stay JAM (page 7-225)
JB400: Paper overlap sensor non-arrival JAM (page 7-225)
JB410: Paper overlap sensor stay JAM (page 7-226)

Error code/ Contents
JB500: Secondary forward/reverse sensor non-arrival JAM (page 7-227)
JB510: Secondary forward/reverse sensor stay JAM (page 7-228)
JB600: Extra folding sensor non-arrival JAM (page 7-228)
JB610: Extra folding sensor stay JAM (page 7-229)
JB700: Relay eject sensor non-arrival JAM (page 7-229)
JB710: Relay eject sensor stay JAM (page 7-230)
JB800: Eject sensor non-arrival JAM (page 7-230)
JB810: Eject sensor stay JAM (page 7-231)
JB900: Entrance motor JAM (page 7-231)
JB901: Regist front motor JAM (page 7-231)
JB902: Regist motor JAM (page 7-232)
JB903: Paper overlap motor JAM (page 7-232)
JB904: Folding motor JAM (page 7-232)
JB905: Secondary forward/reverse motor JAM (page 7-233)
JB906: Primary conveying motor JAM (page 7-233)
JB907: Secondary conveying motor JAM (page 7-233)
JB908: Folding eject tray motor JAM (page 7-234)
JB910: Entrance feedshift claw motor JAM (page 7-234)
JB920: Folding feedshift claw motor JAM (page 7-235)
JB930: Warp in prevention claw motor JAM (page 7-235)
JB940: Extra folding motor JAM (page 7-236)
JB950: Eject feedshift claw motor JAM (page 7-236)
JB960: Cover open detection (page 7-237)
JB970: Indication failure JAM (page 7-238)
JB980: Invalid paper stop JAM (page 7-238)
JB990: Paper JAM caused by the firmware (page 7-238)

Content of Jam Code

J0000: Power ON jam

The power was turned on with the unspecified conveying sensor turned on.

Step	Check description	Assumed cause	Measures	Reference
1	Specifying the sensor	(Specify the sensor which is turned on)	Specify the sensor that displays ON at U031. (Go to the next step.)	
2	Checking the paper path	There is a piece of paper remaining on paper conveying route to turn on the sensor.	If a piece of paper or the foreign objects adhere on the conveying path,or a burr in the parts such as the guide or the actuator,remove them.	
3	Checking the sensor	The sensor does not operate correctly.	Clean and reattach the sensor specified at U031,and reconnect the connector. If not repaired, replace it.	
4	Checking the connection	The connector is not connected properly,or the wire is faulty.	Clean the terminal of the following wire connectors and reconnect the connectors. If there is no continuity, replace the wire. • Feed drive unit - Feed drive PWB • Faulty sensor defined at U031 - Feed drive PWB	

J0107: Fuser temperature stabilization time-out

The fuser temperature does not achieve to the paper feed-able temperature within the specified time.

Step	Check description	Assumed cause	Measures	Reference
1	Resetting the power	The controller does not activate properly.	Remove a piece of paper from the conveying section and check the sensors. Then,turn off the power switch and unplug the power cord. When 5s passes,reconnect the power cord and turn the power switch on.	
2	Checking the installation environment	The electric power supply fluctuates or the electric voltage reduces.	Plug the power cord into another wall outlet.	
3	Checking the settings	The actual paper and the paper settings (media type,paper size) do not match.	Set the proper media type via the System Menu.	
4	Firmware upgrade	The firmware does not properly activate.	Upgrade the firmware to the latest version.	
5	Replacing the fuser unit	The fuser heater is faulty.	Replace the fuser unit.	

J0100/J0101/J0104/J0105/J0106: Paper jam caused by the firmware factor

The firmware is not working properly. (conveying related control error)

Step	Check description	Assumed cause	Measures	Reference
1	Resetting the power	The controller does not activate properly.	Remove a piece of paper from the conveying section and check the sensors. Then,turn off the power switch and unplug the power cord. When 5s passes,reconnect the power cord and turn the power switch on.	
2	Firmware upgrade	The firmware does not properly activate.	Upgrade the firmware to the latest version.	

J0110/J0111/J0114: Cover open detection

The cover was detected to be open during printing.

- J0110: Right cover / front cover open detection for maintenance (right cover switch)
- J0111: Front cover open detection (front cover switch)
- J0114: Bridge cover open detection (BR cover switch)

Step	Check description	Assumed cause	Measures	Reference
1	Checking the cover	The covers are not fitted.	Check if the cover is closed firmly,and reattach it if necessary. If the cover is deformed,repair or replace it.	
2	Checking the cover switch	The cover switch does not operate properly.	Reattach the cover switch and reconnect the connector. If the cover switch is faulty,replace it.	

J0212/J0213: Right cover2 open detection

When feeding from cassettes 3 and 4,the opening of the right cover 2 was detected during printing.

Step	Check description	Assumed cause	Measures	Reference
1	Checking the right cover 2	The right cover 2 is not fitted.	Make sure that the right cover 2 (PF right cover) closes securely,and then reinstall it if necessary. If the right cover 2 is deformed,repair or replace it.	
2	Checking the PF right cover switch	PF right cover switch does not operate correctly.	Reattach the PF right cover switch and reconnect the connector. If the PF right cover switch is faulty,replace it.	

J0300: Paper output completion non-detection jam

The paper output completion is not communicated from the finisher.

Step	Check description	Assumed cause	Measures	Reference
1	Resetting the power	The controller does not activate properly.	Remove a piece of paper from the conveying section and check the sensors. Then,turn off the power switch and unplug the power cord. When 5s passes,reconnect the power cord and turn the power switch on.	
2	Checking the connection	The finisher connector is not properly connected to the Main unit.	Reconnect the finisher connector to the Main unit.	
3	Replacing the DF PWB	The DF PWB is faulty.	Replace the DF PWB.	

J0501/J0502/J0503/J0504: Cassette no feed (Prior check item)

When feeding from cassettes 1 to 4,the next sensor does not turn on even after a specified time has passed after turning on the paper feed clutch or PF paper feed clutch.
Target: Main unit (cassettes 1 and 2) or paper feeder (cassettes 3 and 4)

Step	Check description	Assumed cause	Measures	Reference
1	Reloading the paper	The cut-end of the paper is crushed.	Fan the paper well and load it by reversing the paper direction	
2	Checking the paper	The paper leading edge is bent.	Remove the bent paper in the cassette.	
3	Checking the paper	Paper is curled downward or waving.	Correct or replace paper. If it is difficult to replace,switch the leading edge and the trailing edge of paper,or flip paper upside down and reset them.	
4	Checking the paper	Unspecified papers are used.	Explain to the user to use the paper within the specifications.	
5	Checking the paper	foreign objects are on the paper.	Remove paper that the foreign objects adheres in the cassette.	

J0501/J0502: No paper feed from cassette

When feeding from cassettes 1 and 2,the leading edge of the paper does not come out of the cassette. (There is no paper feed mark on the paper leading edge.)
Condition: There is no paper feed mark on the paper leading edge and the lift plate does not rise. (The sound of the lift plate descending when pulling out the cassette cannot be heard.)

Step	Check description	Assumed cause	Measures	Reference
1	Checking the connection	The connector is not connected properly,or the wire is faulty.	Reconnect the wire connector below. If there is no continuity, replace the wire. • Lift motor 1,2 - Feed drive PWB • Feed drive PWB - Engine PWB	
2	Checking the drive parts	The lift motor drive is not transmitted to the lift plate drive parts because of the engagement failure.	If there is any abnormality such as damage to the gears or couplings of lift motors 1 and 2,or foreign objects is caught in them,clean or replace them.	
3	Checking the lift motor	The lift motor is not attached properly or faulty.	Reattach the lift motor 1 or 2 and reconnect the connector. If not repaired, replace it.	
4	Replacing the lift plate	The lift plate is damaged or deformed.	Replace the lift plate.	
5	Replacing the feed drive PWB	The feed drive PWB is faulty.	Replace the feed drive PWB.	
6	Replacing the engine PWB	The engine PWB is faulty.	Replace the engine PWB.	

J0503/J0504: No paper feed from cassette

When feeding from cassettes 3 and 4 (paper feeder), the leading edge of the paper does not come out of the cassette. (There is no paper feed mark on the paper leading edge.)
Condition: There is no paper feed mark on the paper leading edge and the lift plate does not rise. (The sound of the lift plate descending when pulling out the cassette cannot be heard.)

Step	Check description	Assumed cause	Measures	Reference
1	Checking the connection	The connector is not connected properly,or the wire is faulty.	Reconnect the wire connector below. If there is no continuity, replace the wire. • PF lift motor 1,2 - PF PWB • PF PWB - Engine PWB	
2	Checking the drive parts	The PF lift motor drive is not transmitted to the PF lift plate drive parts because of the engagement failure.	If there is any abnormality such as damage to the gears or couplings of the PF lift motors 1 and 2,or foreign objects is caught in them,clean or replace them.	
3	Checking the PF lift motor	PF lift motor is not attached properly or faulty.	Reattach the PF lift motor 1 or 2 and reconnect the connector. If not repaired, replace it.	
4	Replacing the PF lift plate	The PF lift plate is damaged or deformed.	Replace the PF lift plate.	
5	Replacing the PF PWB	The PF PWB is faulty.	Replace the PF PWB.	
6	Replacing the engine PWB	The engine PWB is faulty.	Replace the engine PWB.	

J0501/J0502: No paper feed from cassette

When feeding from cassettes 1 and 2,the leading edge of the paper does not come out of the cassette. (There is no paper feed mark on the paper leading edge.)
Condition: There is no paper feed mark on the paper leading edge and the lift plate is raised (The sound of the lift plate descending when pulling out the cassette can be heard.),but the paper feed drive Does not start.

Step	Check description	Assumed cause	Measures	Reference
1	Checking the connection	The connector is not connected properly,or the wire is faulty.	Reconnect the wire connector below. If there is no continuity, replace the wire. • Paper feed drive unit (paper feed clutches 1 and 2) - Feed drive PWB • Feed drive PWB - Engine PWB	
2	Checking the paper feed shaft and the pin	Feed roller does not rotate as feed shaft and feed pin of the feed roller is not attach properly.	Reattach the feed shaft and feed pin. If there is deformation,etc.,replace them.	
3	Checking the paper feed clutch	The paper feed clutch is not connected,so the paper feed roller does not rotate.	If U032 [Cass1] or [Cass2] is executed and the paper feed clutches 1 and 2 do not operate properly,reattach and reconnect the connector. If it is not repaired, replace it.	
4	Removing the foreign objects and checking the operation of the actuator	The lift plate does not rise up till the upper limit position while the lift upper limit sensor turns on.	Remove a piece of paper or foreign objects. Check if the actuator of the lift upper limit sensor 1 or 2 is switched to on when the lift plate rises up. Then,reattach the actuator if necessary.	
5	Checking the drive gear	The drive from the feed motor is not transmitted.	If there are any problems on the gear,etc. of the feed drive unit,replace them.	
6	Replacing the feed motor	The feed roller does not rotate since the feed motor does not drive.	Execute U030 [Feed]. If the feed motor does not operate correctly,reattach it and reconnect the connector. If not repaired, replace it.	
7	Replacing the feed drive PWB	The feed drive PWB is faulty.	Replace the feed drive PWB.	
8	Replacing the engine PWB	The engine PWB is faulty.	Replace the engine PWB.	

J0503/J0504: No paper feed from cassette

When feeding from cassettes 3 and 4 (paper feeder), the leading edge of the paper does not come out of the cassette. (There is no paper feed mark on the paper leading edge.)
Condition: There is no paper feed mark on the paper leading edge and the lift plate is raised (you can hear the lift plate descending sound when pulling out the cassette), but the paper feed drive Does not start.

Step	Check description	Assumed cause	Measures	Reference
1	Checking the paper feed shaft	The PF paper feed roller does not rotate because the paper feed shaft is not installed properly.	Reinstall the paper feed shaft of the PF paper feed roller. If there is any deformation,replace it.	
2	Checking the drive gear	The PF feed motor drive is not transmitted.	If there are any problems on the gear,etc. of the PF drive unit,replace them.	
3	Removing the foreign objects and checking the operation of the actuator	The PF lift plate does not rise up till the upper limit position while the PF lift upper limit sensor turns on.	Remove a piece of paper or foreign objects. Check if the actuator of the PF lift upper limit sensor 1 or 2 is switched to on when the PF lift plate rises up. Then,reattach the actuator if necessary.	
4	Checking the connection	The connector is not connected properly,or the wire is faulty.	Reconnect the wire connector below. If there is no continuity, replace the wire. • PF paper feed motor - PF PWB • PF drive unit (PF paper feed clutches 1 and 2) - PF PWB • PF PWB - Engine PWB	
5	Checking the PF paper feed clutch	PF feed roller does not rotate since PF feed clutch is not engaged.	Execute U247 [2PF] > [Clutch] > [C1 Clutch] or [C2 Clutch],and if the PF paper feed clutches 1 and 2 do not operate properly,reinstall and reconnect the connector. If it is not repaired, replace it.	
6	Replacing the PF feed motor	The PF feed roller does not rotate since the PF feed motor does not drive.	Execute U247 [2PF] > [Motor] > [On],and if the PF paper feed motor does not operate properly,reinstall it and reconnect the connector. If it is not repaired, replace it.	
7	Replacing the PF PWB	The PF PWB is faulty.	Replace the PF PWB.	
8	Replacing the engine PWB	The engine PWB is faulty.	Replace the engine PWB.	

J0501/J0502/J0503/J0504: No paper feed from cassette 1 - 4

When feeding from cassettes 1 to 4,the paper stops at the pickup roller after the paper feed clutch or PF paper feed clutch is turned on, and the next sensor does not turn on.
Target: Main unit (cassettes 1 and 2) or paper feeder (cassettes 3 and 4)
Conditions: There is a paper slip mark on the leading edge of the paper. (The pickup roller cannot convey the paper.)

Step	Check description	Assumed cause	Measures	Reference
1	Checking the paper gauge	More than upper limit of paper is loaded.	Reset the number of sheets that fit in the upper limit label position.	
2	Relocating the paper width guides	The locations of the paper width guides do not fit with the paper size.	Relocate the paper width guides to fit them with the paper size.	
3	Checking the pressure spring for the pickup pulley	The conveying function of the pickup pulley is not enough.	Reattach the spring for the pickup pulley if it comes off. If deformed,replace it.	
4	Checking the pickup pulley	The conveying function of the pickup pulley is not enough.	Clean the surface of the pickup roller. If the surface is worn out,replace it.	
6	Checking the paper feed roller	The conveying function of the paper feed roller is not enough.	Clean the surface of the paper feed roller. If it is worn out,replace it.	

J0501/J0502/J0503/J0504: No paper feed from cassette 1 - 4

When feeding from cassettes 1 to 4,the paper stops at the retard roller after the paper feed clutch or PF paper feed clutch is turned on, and the next sensor does not turn on.
Target: Main unit (cassettes 1 and 2) or paper feeder (cassettes 3 and 4)
Conditions: There is a fold or tear in the center of the paper leading edge. (Paper cannot be fed to the retard roller, or the retard roller is not rotating forward.)

Step	Check description	Assumed cause	Measures	Reference
1	Checking the retard roller	Conveying capability of the retard roller is not enough.	Clean the surface of the retard roller. If it is worn out,replace it.	
2	reattaching the retard spring	The retard spring is out of position.	Reattach the retard spring.	
3	Check the conveying path (when the leading edge of the paper is broken or is being conveying at an angle)	Paper is caught at the conveying guide,piece of paper,etc..	If a piece of paper or the foreign objects adhere on the conveying path,or a burr in the parts such as the conveying surface of the conveying guide or the actuator,remove or replace them. If the sheet or film has a damage,deformation,floating,repair or replace them.	

J0501/J0502/J0503/J0504: No paper feed from cassette 1 - 4

When feeding from cassettes 1 to 4,the paper stops at the paper feed roller after the paper feed clutch or PF paper feed clutch is turned on, and the next sensor does not turn on.
Target: Main unit (cassettes 1 and 2) or paper feeder (cassettes 3 and 4)
Conditions: The part other than the center of the paper leading edge is broken. (Paper gets caught and jams before entering the retard roller.)

Step	Check description	Assumed cause	Measures	Reference
1	Checking the paper	Paper is curled downward.	Correct or replace paper. If it is difficult to replace,switch the leading edge and the trailing edge of paper,or flip paper upside down and reset them.	
2	Check the conveying path (when the leading edge of the paper is broken or is being conveying at an angle)	Paper is caught at the conveying guide,piece of paper,etc..	If a piece of paper or the foreign objects adhere on the conveying path,or a burr in the parts such as the conveying surface of the conveying guide or the actuator,remove or replace them. If the sheet or film has a damage,deformation,floating,repair or replace them.	

J0501/J0502: No paper feed from cassette

When feeding from cassettes 1 and 2,after the paper feed clutch is turned on, the leading edge of the paper comes out of the cassette, but it has not reached the next sensor.
Conditions: The carrying capacity is low. Or the paper is slipping.

Step	Check description	Assumed cause	Measures	Reference
1	Reloading the paper width guide (when the paper is being transported at an angle)	The locations of the paper width guides do not fit with the paper size.	Relocate the paper width guides to fit them with the paper size.	
2	Checking the load capacity of paper (when the paper is being transported diagonally)	More than upper limit of paper is loaded.	Reset the number of sheets that fit in the upper limit label position.	
3	Checking the retard roller	The conveying performance is deteriorated due to poor forward rotation of the retard roller	Clean the surface of the retard roller. If it is worn out,replace it.	
4	reattaching retard release lever and retard holder	The retard release lever and the retard holder do not operate correctly due to the installation failure.	Reattach the retard release lever and retard holder.	
5	Checking the paper feed roller	The conveying function of the paper feed roller is not enough.	Clean the surface of the paper feed roller. If it is worn out,replace it.	
6	Checking the connection	The connector is not connected properly,or the wire is faulty.	Clean the terminals of the wire connector below and reinsert them. If there is no continuity, replace the wire. • Middle clutch-Feed drive PWB (cassette 1) • Feed drive unit (vertical conveying clutch)-Feed drive PWB (cassette 2) • Feed drive PWB-Engine PWB	
7	Checking the clutch	The clutch does not operate properly.	Check the operation of the paper feed related clutch on U032. If it does not work properly,reinstall the clutch and reconnect the connector. If it is not repaired, replace it. Cassette 1: middle clutch (U032 [Middle]) Cassette 2: Vertical conveying clutch (U032 [Feed])	
8	Replacing the feed drive PWB	The feed drive PWB is faulty.	Replace the feed drive PWB.	
9	Replacing the engine PWB	The engine PWB is faulty.	Replace the engine PWB.	

J0503/J0504: No paper feed from cassette

When feeding from cassettes 3 and 4 (paper feeder), after the PF paper feed clutch is turned on, the paper leading edge comes out of the cassette, but has not reached the next sensor.
Conditions: The carrying capacity is low. Or the paper is slipping.

Step	Check description	Assumed cause	Measures	Reference
1	Reloading the paper width guide (when the paper is being transported at an angle)	The locations of the paper width guides do not fit with the paper size.	Relocate the paper width guides to fit them with the paper size.	
2	Checking the load capacity of paper (when the paper is being transported diagonally)	More than upper limit of paper is loaded.	Reset the number of sheets that fit in the upper limit label position.	
3	Checking the PF retard roller	The conveying performance is deteriorated due to the poor forward rotation of the PF retard roller.	Clean the surface of the PF retard roller. If it is worn out,replace it.	
4	Reinstallation of PF retard release lever and PF retard holder	Due to improper installation, the PF retard release lever and PF retard holder do not operate properly.	Reinstall the PF retard release lever and PF retard holder.	
5	Checking the PF paper feed roller	The conveying capacity of the PF paper feed roller is not sufficient.	Clean the surface of the PF paper feed roller. If it is worn out,replace it.	
6	Checking the connection	The connector is not connected properly,or the wire is faulty.	Clean the terminal of the following wire connectors and reconnect the connectors. If there is no continuity, replace the wire. • PF conveying clutch 1,2 - PF PWB • PF PWB - Engine PWB	
7	Checking the PF conveying clutch	PF conveying clutch does not operate correctly.	Execute U247 [2PF] > [Clutch] > [Feed1 Clutch] or [Feed2 Clutch]. If the PF conveying clutches 1 and 2 do not operate properly,reinstall and reconnect the connector. If it is not repaired, replace it.	
8	Replacing the PF PWB	The PF PWB is faulty.	Replace the PF PWB.	
9	Replacing the engine PWB	The engine PWB is faulty.	Replace the engine PWB.	

J0501/J0502: No paper feed from cassette

When feeding from cassettes 1 and 2,after the paper feed clutch is turned on, the leading edge of the paper comes out of the cassette and is conveyed over the next roller to reach the next sensor.
Condition: Sensor detection is not stable.

Step	Check description	Assumed cause	Measures	Reference
1	Checking the paper feed sensor 1 (when the paper is fed from cassette 1 and there is a deflection mark on the paper)	Paper feed sensor 1 is not operating properly.	Execute U031 [Cass1 Feed]. If Paper Feed Sensor 1 does not work properly,clean it,reinstall it,and reconnect the connector. If it is not repaired, replace it.	
2	Checking the paper feed sensor 2 (when feeding paper from cassette 2)	Paper feed sensor 2 is not operating properly.	Execute U031 [Cass2 Feed]. If Paper Feed Sensor 2 does not work properly,clean it,reinstall it,and reconnect the connector. If it is not repaired, replace it.	
3	Checking the connection (when feeding from cassette 1)	The connector is not connected properly,or the wire is faulty.	Clean the terminals of the wire connector below and reinsert them. If there is no continuity, replace the wire. • Paper feed sensor 1-Feed drive PWB • Feed drive PWB-Engine PWB	
4	Checking the connection (when feeding from cassette 2)	The connector is not connected properly,or the wire is faulty.	Clean the terminals of the wire connector below and reinsert them. If there is no continuity, replace the wire. • Paper feed sensor 2-Feed drive PWB • Feed drive PWB-Engine PWB	
5	Replacing the feed drive PWB	The feed drive PWB is faulty.	Replace the feed drive PWB.	
6	Replacing the engine PWB	The engine PWB is faulty.	Replace the engine PWB.	

J0503/J0504: No paper feed from cassette

When feeding from cassettes 3 and 4 (paper feeder), after the PF paper feed clutch is turned on, the paper leading edge comes out of the cassette and is conveyed over the next roller to reach the next sensor.
Condition: Sensor detection is not stable.

Step	Check description	Assumed cause	Measures	Reference
1	Checking the PF conveying sensor	PF conveying sensor does not operate correctly.	Execute U247 [2PF Switch] > [V Conv1] or [V Conv2]. If the PF conveying sensors 1 and 2 do not operate properly,clean them,reinstall them,and reconnect the connectors. If it is not repaired, replace it.	
2	Checking the connection	The connector is not connected properly,or the wire is faulty.	Clean the terminal of the following wire connectors and reconnect the connectors. If there is no continuity, replace the wire. • PF conveying sensor 1,2 - PF PWB • PF PWB - Engine PWB	
3	Replacing the PF PWB	The PF PWB is faulty.	Replace the PF PWB.	
4	Replacing the engine PWB	The engine PWB is faulty.	Replace the engine PWB.	

J0501/J0502: No paper feed from cassette

When feeding from cassettes 1 and 2,after the paper feed clutch is turned on, the paper leading edge comes out of the cassette, but it is stopped by the next roller.
Conditions: The carrying capacity is low. The paper is slipping. Or, the roller is not rotating.

Step	Check description	Assumed cause	Measures	Reference
1	Reloading the paper width guide (when the paper is being transported at an angle)	The locations of the paper width guides do not fit with the paper size.	Relocate the paper width guides to fit them with the paper size.	
2	Checking the load capacity of paper (when the paper is being transported diagonally)	More than upper limit of paper is loaded.	Reset the number of sheets that fit in the upper limit label position.	
3	(When the paper leading edge is bent or paper is skewed) Checking the paper path	Paper is caught at the conveying guide,piece of paper,etc..	If a piece of paper or the foreign objects adhere on the conveying path,or a burr in the parts such as the conveying surface of the conveying guide or the actuator,remove or replace them. If the sheet or film has a damage,deformation,floating,repair or replace them.	
4	Checking the paper feed roller	The conveying function of the paper feed roller is not enough.	Clean the surface of the paper feed roller. If it is worn out,replace it.	
5	Checking the conveying roller and the pulley	Conveying capability of the conveying roller is not enough.	Clean the surface of the conveying roller and roller. Check the pressure of the conveying roller and roller,and if the spring or bearing is removed,reinstall it. If it is deformed or worn out,replace it.	
6	Checking the drive gear	The conveying roller does not rotate since the drive gear does not transfer the drive.	If there is foreign objects on the drive gear of the conveying roller,remove it. If it is damaged,replace it.	
7	Checking the feed drive unit	Feed drive unit does not operate correctly.	Check the operation of the feed drive unit. If the feed drive unit does not operate correctly,reattach it. If not repaired, replace it.	
8	Checking the connection	The connector is not connected properly,or the wire is faulty.	Clean the terminals of the wire connector below and reinsert them. If there is no continuity, replace the wire. • Middle clutch-Feed drive PWB (cassette 1) • Paper feed drive unit (vertical conveying clutch) - Feed drive PWB (cassette 2) • Paper feed motor - Feed drive PWB • Feed drive PWB - Engine PWB	
9	Checking the clutch	The clutch does not operate properly.	Check the operation of the paper feed related clutch on U032. If it does not work properly,reinstall the clutch and reconnect the connector. If it is not repaired, replace it. Cassette 1: middle clutch (U032 [Middle]) Cassette 2: Vertical conveying clutch (U032 [Feed])	
10	Checking the feed motor	The feed motor does not rotate.	Execute U030 [Feed]. If the feed motor does not operate correctly,reattach it and reconnect the connector. If not repaired, replace it.	
11	Replacing the feed drive PWB	The feed drive PWB is faulty.	Replace the feed drive PWB.	
12	Replacing the engine PWB	The engine PWB is faulty.	Replace the engine PWB.	

J0503/J0504: No paper feed from cassette

When feeding from cassettes 3 and 4 (paper feeder), after the PF paper feed clutch is turned on, the paper leading edge comes out of the cassette, but it is stopped by the next roller.
Conditions: The carrying capacity is low. The paper is slipping. Or, the roller is not rotating.

Step	Check description	Assumed cause	Measures	Reference
1	Reloading the paper width guide (when the paper is being transported at an angle)	The locations of the paper width guides do not fit with the paper size.	Relocate the paper width guides to fit them with the paper size.	
2	Checking the load capacity of paper (when the paper is being transported diagonally)	More than upper limit of paper is loaded.	Reset the number of sheets that fit in the upper limit label position.	
3	Check the conveying path (when the leading edge of the paper is broken or is being conveying at an angle)	Paper is caught at the conveying guide,piece of paper,etc..	If a piece of paper or the foreign objects adhere on the conveying path,or a burr in the parts such as the conveying surface of the conveying guide or the actuator,remove or replace them. If the sheet or film has a damage,deformation,floating,repair or replace them.	
4	Checking the PF paper feed roller	The conveying capacity of the PF paper feed roller is not sufficient.	Clean the surface of the PF paper feed roller. If it is worn out,replace it.	
5	Checking the PF conveying roller and PF conveying pulley	The PF conveying roller conveying force is not enough.	Clean the surface of the PF conveying roller and PF conveying roller. Check the pressure of the PF conveying roller,and if the spring or bearing has come off,reattach it. If it is deformed or worn out,replace it.	
6	Checking the drive gear	The PF conveying roller is not rotating because the drive gear does not transmit the drive.	If there is foreign objects on the drive gear of the PF conveying roller,remove it. If it is damaged,replace it.	
7	Checking the PF drive unit	PF drive unit does not operate correctly.	Check the operation of the PF drive unit. If the PF drive unit does not operate correctly,reattach it. If not repaired, replace it.	
8	Checking the connection	The connector is not connected properly,or the wire is faulty.	Clean the terminal of the following wire connectors and reconnect the connectors. If there is no continuity, replace the wire. • PF conveying clutch 1,2 - PF PWB • PF feed motor - PF PWB • PF PWB - Engine PWB	
9	Checking the PF conveying clutch	PF conveying clutch does not operate correctly.	Execute U247 [2PF] > [Clutch] > [Feed1 Clutch] or [Feed2 Clutch]. If the PF conveying clutches 1 and 2 do not operate properly,reinstall and reconnect the connector. If it is not repaired, replace it.	
10	Checking the PF feed motor	The PF feed motor does not rotate.	Execute U247 [2PF] > [Motor] > [On]. If the PF paper feed motor does not work properly,reinstall it and reconnect the connector. If it is not repaired, replace it.	
11	Replacing the PF PWB	The PF PWB is faulty.	Replace the PF PWB.	
12	Replacing the engine PWB	The engine PWB is faulty.	Replace the engine PWB.	

J0508: No paper feed from the duplex section

After the DU clutch is turned on (paper reverse output), the Regist sensor does not turn on.
Condition: The paper is damaged. (Paper is caught. The conveying capability is low, or the paper is slipping.)

Step	Check description	Assumed cause	Measures	Reference
1	Performing the prior standard check items	There is a mechanical cause such as the dirty guide,etc.	Perform the prior standard check items.	
2	Check the conveying path (when the leading edge of the paper is broken or is being conveying at an angle)	Paper is caught at the conveying guide,piece of paper,etc..	If a piece of paper or the foreign objects adhere on the conveying path,or a burr in the parts such as the conveying surface of the conveying guide or the actuator,remove or replace them. If the sheet or film has a damage,deformation,floating,repair or replace them.	
3	Check the paper (when the leading edge of the paper is broken)	The paper curls or is wavy.	Replace the paper if it is damp.	
4	Checking the paper (when the paper slips on the DU conveying roller and stops)	Unspecified papers are used.	Explain to the user to use the paper within the specifications.	
5	Checking the DU conveying roller and rollers (when the paper is stopped on the DU conveying roller)	Paper conveying capability is decreasing or slipping. (Rotation is not smooth)	Clean the surface of the DU conveying roller and DU conveying roller. Check the pressure on the rollers and rollers,and if the spring or bearing is removed,reattach it. If it is deformed or worn out,replace it. If there is foreign objects on the drive gear,remove it and replace it if it is damaged.	
6	Checking the actuator and the spring	The actuator does not operate properly.	Reattach the actuator and the spring of the registration sensor. If the do not operate correctly due to the deformation,etc.,repair or replace them.	

J0508: No paper feed from the duplex section

After the DU clutch is turned on (paper ejection reversal), the Regist sensor does not turn on.
Condition: There is no damage to the paper. (The duplex conveying drive is not rotating, or the DU clutch is not operating properly.)

Step	Check description	Assumed cause	Measures	Reference
1	Checking the driving parts (when the paper is stopped by the DU conveying roller)	The feed motor drive is not transmitted properly.	Check if the DU conveying roller manually rotates smoothly. And clean and reattach the drive parts if necessary. If not repaired, replace them.	
2	Checking the connection	The connector is not connected properly,or the wire is faulty.	Clean the terminals of the wire connector below and reinsert them. If there is no continuity, replace the wire. • DU sensor 1 - Feed drive PWB • conveying unit (DU sensor 2) - Feed drive PWB • DU clutch 1,2 - Feed drive PWB • Feed motor - Feed drive PWB • Feed drive PWB - Engine PWB	
3	Checking the DU sensor	DU sensor does not operate correctly.	Execute U031 [DU1] or [DU2]. If the DU sensor 1 or 2 does not operate properly,clean and reattach it then reconnect the connector. If not repaired, replace it.	
4	Checking the DU clutch	DU clutch does not operate correctly.	Execute U032 [DU1] or [DU2]. If DU clutch 1 or 2 does not operate correctly,reattach it and reconnect the connector. If not repaired, replace it.	
5	Checking the feed motor	The feed motor does not operate correctly.	Execute U030 [Feed]. If the feed motor does not operate correctly,reattach it and reconnect the connector. If not repaired, replace it.	
6	Replacing the feed drive PWB	The feed drive PWB is faulty.	Replace the feed drive PWB.	
7	Replacing the engine PWB	The engine PWB is faulty.	Replace the engine PWB.	

J0509: No paper feed from the MP tray

The Regist sensor does not turn on when feeding paper from the multi bypass tray.
Condition: The paper is damaged. (Paper is caught. The conveying capability is low, or the paper is slipping.)

Step	Check description	Assumed cause	Measures	Reference
1	Checking the paper (when the paper is stopped by the MP paper feed roller)	The cut-end of the paper is crushed.	Fan the paper well and load it by reversing the paper direction	
2	Check the paper (when the leading edge of the paper is broken)	The paper leading edge is bent.	Remove bent paper from MP tray.	
3	Check the paper (when the leading edge of the paper is broken)	Paper is curled downward or waving.	Correct or replace paper. If it is difficult to replace,switch the leading edge and the trailing edge of paper,or flip paper upside down and reset them.	
4	Check the paper (when the leading edge of the paper is broken)	foreign objects are on the paper.	Remove paper that the foreign objects adheres from MP tray.	
5	Checking the paper (when the paper is stopped by the MP paper feed roller)	Unspecified papers are used.	Explain to the user to use the paper within the specifications.	
6	Check the conveying path (when the leading edge of the paper is broken or is being conveying at an angle)	Paper is caught at the conveying guide,piece of paper,etc..	If a piece of paper or the foreign objects adhere on the conveying path,or a burr in the parts such as the conveying surface of the conveying guide or the actuator,remove or replace them. If the sheet or film has a damage,deformation,floating,repair or replace them.	
7	Checking the MP paper feed roller and drive gear (when paper is stopped on the MP paper feed roller)	Paper conveying capability is decreasing or slipping. (Rotation is not smooth)	Clean the surface of the MP paper feed roller. If it is worn out,replace it. Also,if there is foreign objects on the drive gear,remove it and replace it if it is damaged.	

J0509: No paper feed from the MP tray

The Regist sensor does not turn on when feeding paper from the multi bypass tray.
Condition: There is no damage to the paper. (Paper feed drive does not start, or MP clutch does not operate properly.)

Step	Check description	Assumed cause	Measures	Reference
1	Replacing the MP retard guide sheet	The paper edge is caught by the MP retard guide sheet.	Replace the MP retard guide sheet (302ND0885_) affixed on the MP retard roller guide.	
2	Checking the MP lift plate	The MP lift plate is not attached properly.	Reattach the MP lift plate if it does not rise up.	
3	Checking the drive parts (when the paper is stopped by the MP paper feed roller)	The feed motor drive is not transmitted properly.	Check if the drive of the feed motor is transmitted to the conveying unit and,clean and reattach the drive parts if necessary. If not repaired, replace the parts.	
4	Checking the connection	The connector is not connected properly,or the wire is faulty.	Clean the terminals of the wire connector below and reinsert them. If there is no continuity, replace the wire. • Regist sensor - Feed drive PWB • MP clutch - Feed drive PWB • MP lift motor - Feed drive PWB • Feeding motor - Feed drive PWB • Feed drive PWB - Engine PWB	
5	Checking the MP lift motor	The MP lift motor does not operate properly.	When the MP lift plate does not rise up,reattach the MP lift motor and reconnect the connector. If not repaired, replace it.	
6	Checking the registration sensor	The registration sensor does not operate properly.	Execute U031 [Regist]. If the registration sensor does not operate properly,clean and reattach it then reconnect the connector. If not repaired, replace it.	
7	Checking the MP clutch	The MP clutch does not operate correctly.	Execute U032 [MPT Feed]. If the MP clutch does not operate correctly,reattach it and reconnect the connector. If not repaired, replace it.	
8	Checking the feed motor	The feed motor does not operate correctly.	Execute U030 [Feed]. If the feed motor does not operate correctly,reattach it and reconnect the connector. If not repaired, replace it.	
9	Replacing the feed drive PWB	The feed drive PWB is faulty.	Replace the feed drive PWB.	
10	Replacing the engine PWB	The engine PWB is faulty.	Replace the engine PWB.	

J0511: Multi-feeding from cassette

When feeding from cassette 1,the paper feed sensor 1 remains ON and does not turn OFF.

Step	Check description	Assumed cause	Measures	Reference
1	Checking the paper	The cut-end of the paper is crushed.	Fan the paper well and load it by reversing the paper direction	
2	Paper replacement and cassette heater installation	The paper is damp.	Perform printing on the paper immediately after opening and check if there is any difference in the phenomenon. If there is no problem with the paper immediately after opening,replace the paper. Also,consider installing a cassette heater.	
3	Checking the retard roller	The paper separation force of the retard roller is not enough. The retard roller contacts the feed roller unevenly.	Clean the surface of the retard roller. If it is worn out,replace it.	
4	Checking the retard spring	The retard spring is out of position.	Reattach the retard spring.	
5	Checking the primary paper feed unit	The primary paper feed unit is faulty	Replace the primary paper feed unit with the cassette 2 unit and check if it operates properly. If the problem is resolved,replace the primary paper feed unit.	
6	Checking the connection	The connector is not connected properly,or the wire is faulty.	Clean the terminals of the wire connector below and reinsert them. If there is no continuity, replace the wire. • Paper length sensor 1 - Feed drive PWB • Paper feed sensor 1 - Feed drive PWB • Paper feed drive unit (Paper feed clutch 1) - Feed drive PWB • Feed drive PWB - Engine PWB	
7	Checking the paper length sensor	Paper size is misdetected by paper length sensor.	If the paper size loaded in the cassette differs from the paper size indicated on the operation panel,reattach paper length sensor 1 and reconnect the connector. If not repaired, replace it.	
8	Checking the paper feed sensor 1	Paper feed sensor 1 is not operating properly.	Execute U031 [Cass1 Feed]. If Paper Feed Sensor 1 does not work properly,clean it,reinstall it,and reconnect the connector. If it is not repaired, replace it.	
9	Checking the paper feed clutch	The rotation of the feed roller does not stop while the feed clutch remains engaged.	Execute U032 [Cass1]. If feed clutch 1 does not operate correctly,reattach it and reconnect the connector. If not repaired, replace it.	
10	Replacing the feed drive PWB	The feed drive PWB is faulty.	Replace the feed drive PWB.	
11	Replacing the engine PWB	The engine PWB is faulty.	Replace the engine PWB.	

J0512: Multi-feeding from cassette

When feeding from cassette 2,the paper feed sensor 2 does not turn off.

Step	Check description	Assumed cause	Measures	Reference
1	Checking the paper	The cut-end of the paper is crushed.	Fan the paper well and load it by reversing the paper direction	
2	Paper replacement and cassette heater installation	The paper is damp.	Perform printing on the paper immediately after opening and check if there is any difference in the phenomenon. If there is no problem with the paper immediately after opening,replace the paper. Also,consider installing a cassette heater.	
3	Checking the retard roller	The paper separation force of the retard roller is not enough. The retard roller contacts the feed roller unevenly.	Clean the surface of the retard roller. If it is worn out,replace it.	
4	Checking the retard spring	The retard spring is out of position.	Reattach the retard spring.	
5	Checking the primary paper feed unit	The primary paper feed unit is faulty	Replace the primary paper feed unit with the unit of cassette 1 and check if it operates properly. If the problem is resolved,replace the primary paper feed unit.	
6	Checking the connection	The connector is not connected properly,or the wire is faulty.	Clean the terminals of the wire connector below and reinsert them. If there is no continuity, replace the wire. • Paper length sensor 2 - Feed drive PWB • Paper feed sensor 2 - Feed drive PWB • Paper feed drive unit (Paper clutch 2) - Feed drive PWB • Feed drive PWB - Engine PWB	
7	Checking the paper length sensor	Paper size is misdetected by paper length sensor.	If the paper size loaded in the cassette differs from the paper size indicated on the operation panel,reattach paper length sensor 2 and reconnect the connector. If not repaired, replace it.	
8	Checking the paper feed sensor 2	Paper feed sensor 2 is not operating properly.	Execute U031 [Cass2 Feed]. If Paper Feed Sensor 2 does not work properly,clean it,reinstall it,and reconnect the connector. If it is not repaired, replace it.	
9	Checking the paper feed clutch	The paper feed clutch does not operate properly.	Execute U032 [Cass2]. If feed clutch 2 does not operate correctly,reattach it and reconnect the connector. If not repaired, replace it.	
10	Replacing the feed drive PWB	The feed drive PWB is faulty.	Replace the feed drive PWB.	
11	Replacing the engine PWB	The engine PWB is faulty.	Replace the engine PWB.	

J0513/J0514: Multi-feeding from cassette

The PF conveying sensor does not turn off when feeding from cassettes 3 and 4 (paper feeder).

Step	Check description	Assumed cause	Measures	Reference
1	Checking the paper	The cut-end of the paper is crushed.	Fan the paper well and load it by reversing the paper direction	
2	Paper replacement and cassette heater installation	The paper is damp.	Perform printing on the paper immediately after opening and check if there is any difference in the phenomenon. If there is no problem with the paper immediately after opening,replace the paper. Also,consider installing a cassette heater.	
3	Checking the fan-shaped arm (when it occurs at the time of arrival)	The fan shaped arm shifts due to run-over of the actuator for paper length sensor. Or,if the fan shaped arm is deformed,the paper length sensor in the cassette misdetects.	Reinstall the fan-shaped arm (302ND0918_). If it is deformed,replace it.	
4	Checking the PF retard roller	The paper separation force of the PF retard roller is not enough. The PF retard roller contacts the PF feed roller unevenly.	Clean the surface of the PF retard roller. If it is worn out,replace it.	
5	reattaching PF retard spring	The PF retard spring comes off.	Reattach the PF retard spring.	
6	Checking the PF primary paper feed unit	The PF primary paper feed unit is faulty	Replace the PF primary paper feed unit with a unit in another paper feed stage (cassette 3 or cassette 4) and check if it operates properly. If the problem is resolved,replace the PF primary paper feed unit.	
7	Checking the installation	There is no ground between the main unit and the paper feeder.	Check the continuity between the main unit and the paper feeder,and reconnect the drawer connector.	
8	Checking the connection	The connector is not connected properly,or the wire is faulty.	Clean the terminal of the following wire connectors and reconnect the connectors. If there is no continuity, replace the wire. • PF paper length sensor 1,2 - PF PWB • PF conveying sensor 1,2 - PF PWB • PF feed clutch 1,2 - PF PWB • PF PWB - Engine PWB	
9	Checking the PF paper length sensor	Paper size is misdetected by the PF paper length sensor.	If the paper size loaded in the cassette differs from the paper size indicated on the operation panel,reattach the PF paper length sensor 1 or 2 and reconnect the connector. If not repaired, replace it.	
10	Checking the PF conveying sensor	PF conveying sensor does not operate correctly.	Clean and reattach the PF conveying sensor 1 or 2,then reconnect the connector. If not repaired, replace it.	
11	Checking the PF paper feed clutch	The PF paper feed clutch does not operate properly.	Execute U247 [2PF] > [Clutch] > [C1 Clutch] or [C2 Clutch]. If PF feed clutch 1 or 2 does not operate properly,reattach it and reconnect the connector. If not repaired, replace it.	
12	Replacing the PF PWB	The PF PWB is faulty.	Replace the PF PWB.	
13	Replacing the engine PWB	The engine PWB is faulty.	Replace the engine PWB.	

J0518: Multi-feeding from the duplex section

The registration sensor does not turn off during paper feed from the duplex section.

Step	Check description	Assumed cause	Measures	Reference
1	Checking the paper	The cut-end of the paper is crushed.	Fan the paper well and load it by reversing the paper direction	
2	Checking the paper	Paper is curled or waved due to the moisture absorption.	Correct or replace paper. If it is difficult to replace,switch the leading edge and the trailing edge of paper,or flip paper upside down and reset them.	
3	Checking the connection	The connector is not connected properly,or the wire is faulty.	Clean the terminal of the following wire connectors and reconnect the connectors. If there is no continuity, replace the wire. • Registration clutch - Feed drive PWB • Registration sensor - Feed drive PWB • DU clutch 1,2 - Feed drive PWB • Feed drive PWB - Engine PWB	
4	Checking the Regist clutch (when the paper advances to the Regist and there is no deflection mark on the paper)	The rotation of the registration roller does not stop while the registration clutch remains engaged.	Execute U032 [Regist]. If the registration clutch does not operate correctly,reattach it and reconnect the connector. If not repaired, replace it.	
5	Checking the registration sensor	The registration sensor does not operate properly.	Execute U031 [Regist]. If the registration sensor does not operate properly,clean and reattach it then reconnect the connector. If not repaired, replace it.	
6	Checking the DU clutch	DU clutch does not operate correctly.	Execute U032 [DU1] or [DU2]. If DU clutch 1 or 2 does not operate correctly,reattach it and reconnect the connector. If not repaired, replace it.	
7	Replacing the feed drive PWB	The feed drive PWB is faulty.	Replace the feed drive PWB.	
8	Replacing the engine PWB	The engine PWB is faulty.	Replace the engine PWB.	

J0519: Multi-feeding from the MP tray

When feeding from MP tray, registration sensor does not turn off.

Step	Check description	Assumed cause	Measures	Reference
1	Checking the paper	The cut-end of the paper is crushed.	Fan the paper well and load it by reversing the paper direction	
2	Checking the paper	Paper is curled or waved.	Correct or replace paper. If it is difficult to replace,switch the leading edge and the trailing edge of paper,or flip paper upside down and reset them.	
3	Checking the MP feed roller and the MP friction pad	The paper fanning is not enough.	Clean the MP feed roller and the MP friction pad,or replace them.	
4	Checking the connection	The connector is not connected properly,or the wire is faulty.	Clean the terminal of the following wire connectors and reconnect the connectors. If there is no continuity, replace the wire. • Registration sensor - Feed drive PWB • MP clutch - Feed drive PWB • Feed drive PWB - Engine PWB	
5	Checking the registration sensor	The registration sensor does not operate properly.	Execute U031 [Regist]. If the registration sensor does not operate properly,clean and reattach it then reconnect the connector. If not repaired, replace it.	
6	Checking the MP clutch	The rotation of the MP feed roller does not stop while the MP clutch remains engaged.	Execute U032 [MPT Feed]. If the MP clutch does not operate correctly,reattach it and reconnect the connector. If not repaired, replace it.	
7	Replacing the feed drive PWB	The feed drive PWB is faulty.	Replace the feed drive PWB.	
8	Replacing the engine PWB	The engine PWB is faulty.	Replace the engine PWB.	

J0523/J0524: No paper feed from the large capacity paper feeder

When feeding from cassettes 3 and 4 (large-capability feeder), the PF horizontal conveying sensor or PF vertical conveying sensor does not turn ON even after a specified time has passed after turning on the PF paper feed clutch 1 or PF paper feed clutch 2.
Condition: The paper is damaged. (Paper is caught. The conveying capability is low, or the paper is slipping.)

Step	Check description	Assumed cause	Measures	Reference
1	Check the paper (when the leading edge of the paper is broken)	The paper leading edge is bent.	Remove bent paper from the deck.	
2	Check the paper (when the leading edge of the paper is broken)	Paper is curled downward or waving.	Correct or replace paper. If it is difficult to replace,switch the leading edge and the trailing edge of paper,or flip paper upside down and reset them.	
3	Check the paper (when the leading edge of the paper is broken)	foreign objects are on the paper.	Remove paper that the foreign objects adhere from the deck	
4	Check the conveying path (when the leading edge of the paper is broken or is being conveying at an angle)	Paper is caught at the conveying guide,piece of paper,etc..	If a piece of paper or the foreign objects adhere on the conveying path,or a burr in the parts such as the conveying surface of the conveying guide or the actuator,remove or replace them. If the sheet or film has a damage,deformation,floating,repair or replace them.	
5	Checking the load capacity of paper (when the paper is being transported diagonally)	More than upper limit of paper is loaded.	Reset the number of sheets that fit in the upper limit label position.	
6	Checking the paper (when the paper is stopped by the PF paper feed roller)	The cut-end of the paper is crushed.	Fan the paper well and load it by reversing the paper direction	
7	Checking the paper (when the paper is stopped by the PF paper feed roller)	Unspecified papers are used.	Explain to the user to use the paper within the specifications.	
8	Checking the PF paper feed roller (when the paper is stopped at the PF paper feed roller)	Paper conveying capability is decreasing or slipping. (Rotation is not smooth)	Clean the surface of the PF paper feed roller. If it is worn out,replace it.	
9	Checking the drive parts (when the paper is stopped by the PF paper feed roller)	The PF feed motor drive is not transmitted correctly.	Check if the drive of the PF feed motor is transmitted to the PF drive unit and,clean and reattach the drive parts if necessary. If not repaired, replace the parts.	
10	Checking the actuator and the spring	The actuator does not operate properly.	Reattach the actuator and the spring of the PF feed sensor. If they do not operate correctly due to the deformation,etc.,repair or replace them.	
11	Checking the PF retard roller	The paper separation force of the PF retard roller is not enough. The PF retard roller contacts the PF feed roller unevenly.	Clean the surface of the PF retard roller. If it is worn out,replace it.	
12	reattaching PF retard spring	The PF retard spring comes off.	Reattach the PF retard spring.	

J0523/J0524: No paper feed from the large capacity paper feeder

When feeding from cassettes 3 and 4 (large-capacity feeder), the PF horizontal conveying sensor or PF vertical conveying sensor does not turn ON even after a specified time has passed after turning on the PF paper feed clutch 1 or PF paper feed clutch 2.
Condition: There is no damage to the paper. (Paper feed drive does not start, or the PF paper feed clutch does not operate properly.)

Step	Check description	Assumed cause	Measures	Reference
1	Checking the drive parts (when the paper is stopped by the PF paper feed roller)	The PF feed motor drive is not transmitted correctly.	Check if the drive of the PF feed motor is transmitted to the PF drive unit and,clean and reattach the drive parts if necessary. If not repaired, replace the parts.	
2	Checking the connection	The connector is not connected properly,or the wire is faulty.	Clean the terminals of the wire connector below and reinsert them. If there is no continuity, replace the wire. • PF vertical conveying sensor - PF PWB (cassette 3) • PF horizontal conveying sensor - PF PWB (cassette 4) • PF paper feed clutch 1 - PF PWB (cassette 3) • PF Feed Clutch - PF PWB (Cassette 4) • PF Feed Motor - PF PWB • PF PWB - Engine PWB	
3	Checking the PF horizontal conveying sensor or the PF vertical conveying sensor	The PF horizontal conveying sensor or the PF vertical conveying sensor does not operate correctly.	Clean and reattach the PF horizontal conveying sensor or the PF vertical conveying sensor,then reconnect the connector. If not repaired, replace it.	
4	Checking the PF paper feed clutch	The PF paper feed clutch does not operate properly.	Execute U247 [LCF] > [Clutch] > [C1 Clutch] or [C2 Clutch]. If the PF paper feed clutch 1 or PF paper feed clutch 2 does not operate properly,reinstall it and reconnect the connector. If it is not repaired, replace it.	
5	Checking the PF feed motor	The PF feed motor does not operate correctly.	Execute U247 [LCF] > [Motor] > [On],and if the PF paper feed motor does not operate properly,reinstall it and reconnect the connector. If it is not repaired, replace it.	
6	Replacing the PF PWB	The PF PWB is faulty.	Replace the PF PWB.	
7	Replacing the engine PWB	The engine PWB is faulty.	Replace the engine PWB.	

J0533/J0534: Multi-feeding from the large capacity paper feeder

When feeding paper from cassettes 3 and 4 (large-capacity feeder), the PF horizontal conveying sensor or PF vertical conveying sensor does not turn off even after a specified time has passed.

Step	Check description	Assumed cause	Measures	Reference
1	Checking the paper	The cut-end of the paper is crushed.	Fan the paper well and load it by reversing the paper direction	
2	Checking the paper	The paper leading edge is bent.	Remove bent paper from the deck.	
3	Checking the paper	foreign objects are on the paper.	Remove paper that the foreign objects adhere from the deck	
4	Checking the PF retard roller	The paper separation force of the PF retard roller is not enough. The PF retard roller contacts the PF feed roller unevenly.	Clean the surface of the PF retard roller. If it is worn out,replace it.	
5	reattaching PF retard spring	The PF retard spring comes off.	Reattach the PF retard spring.	
6	Checking the installation	The ground between the main unit and the large capacity paper feeder is not secured.	Check the continuity between the main unit and the large capacity paper feeder,and reconnect the drawer connector.	
7	Checking the connection	The connector is not connected properly,or the wire is faulty.	Clean the terminals of the wire connector below and reinsert them. If there is no continuity, replace the wire. • PF vertical conveying sensor - PF PWB (cassette 3) • PF horizontal conveying sensor - PF PWB (cassette 4) • PF horizontal conveying clutch 1 - PF PWB (cassette 3) • PF Horizontal conveying Clutch 2 - PF PWB (Cassette 4) • PF Feed Motor - PF PWB • PF PWB - Engine PWB	
8	Checking the PF horizontal conveying sensor or the PF vertical conveying sensor	The PF horizontal conveying sensor or the PF vertical conveying sensor does not operate correctly.	Clean and reattach the PF horizontal conveying sensor or the PF vertical conveying sensor,then reconnect the connector. If not repaired, replace it.	
9	Checking the PF horizontal conveying clutch	The PF horizontal conveying clutch does not operate correctly.	Execute U247 [LCF] > [Clutch] > [Feed2 Clutch]. If the PF horizontal conveying clutch 1 or PF horizontal conveying clutch 2 does not operate properly,reinstall it and reconnect the connector. If it is not repaired, replace it.	
10	Replacing the PF PWB	The PF PWB is faulty.	Replace the PF PWB.	
11	Replacing the engine PWB	The engine PWB is faulty.	Replace the engine PWB.	

J0545: No paper feed from the side feeder

When feeding from cassette 5,the PF paper feed sensor does not turn on even after a specified time has passed after the PF paper feed clutch is turned on.
Condition: The paper is damaged. (Paper is caught. The conveying capability is low, or the paper is slipping.)

Step	Check description	Assumed cause	Measures	Reference
1	Check the paper (when the leading edge of the paper is broken)	The paper leading edge is bent.	Remove bent paper from the side feeder.	
2	Check the paper (when the leading edge of the paper is broken)	Paper is curled downward or waving.	Correct or replace paper. If it is difficult to replace,switch the leading edge and the trailing edge of paper,or flip paper upside down and reset them.	
3	Check the paper (when the leading edge of the paper is broken)	foreign objects are on the paper.	Remove paper that the foreign objects adhere from the side feeder.	
4	Checking the paper (when the paper is stopped by the PF paper feed roller)	The cut-end of the paper is crushed.	Fan the paper well and load it by reversing the paper direction	
5	Checking the paper (when the paper is stopped by the PF paper feed roller)	Unspecified papers are used.	Explain to the user to use the paper within the specifications.	
6	Checking the load capacity of paper (when the paper is being transported diagonally)	More than upper limit of paper is loaded.	Reset the number of sheets that fit in the upper limit label position.	
7	Check the conveying path (when the leading edge of the paper is broken or is being conveying at an angle)	Paper is caught at the conveying guide,piece of paper,etc..	If a piece of paper or the foreign objects adhere on the conveying path,or a burr in the parts such as the conveying surface of the conveying guide or the actuator,remove or replace them. If the sheet or film has a damage,deformation,floating,repair or replace them.	
8	Checking the pressing spring (when the paper is being transported diagonally)	Pressure balance of front and rear of the PF feed rollers are not proper.	Reattach the pressure spring of the PF feed roller. If it is deformed,repair or replace it.	
9	Checking the PF paper feed roller and drive gear (when paper is stopped at the PF paper feed roller)	Paper conveying capability is decreasing or slipping. (Rotation is not smooth)	Clean the surface of the PF paper feed roller. If it is worn out,replace it. Also,if there is foreign objects on the drive gear,remove it and replace it if it is damaged.	
10	Checking the PF retard roller	The paper separation force of the PF retard roller is not enough. The PF retard roller contacts the PF feed roller unevenly.	Clean the surface of the PF retard roller. If it is worn out,replace it.	
11	reattaching PF retard spring	The PF retard spring comes off.	Reattach the PF retard spring.	

J0545: No paper feed from the side feeder

When feeding from cassette 5,the PF paper feed sensor does not turn on even after a specified time has passed after the PF paper feed clutch is turned on.
Condition: There is no damage to the paper. (Paper feed drive does not start, or the PF paper feed clutch does not operate properly.)

Step	Check description	Assumed cause	Measures	Reference
1	Checking the drive parts (when the paper is stopped by the PF paper feed roller)	The drive from the PF conveying motor is not transmitted properly.	Check that the drive of the PF conveying motor is transmitted to the PF drive unit,and if necessary,clean the drive parts and reinstall them. If it is not repaired, replace it.	
2	Checking the installation	There is no ground between the main unit and the side feeder.	Install the rail of the side feeder (Bundled items of the side feeder) to the main unit.	
3	Checking the connection	The connector is not connected properly,or the wire is faulty.	Clean the terminals of the wire connector below and reinsert them. If there is no continuity, replace the wire. • PF paper feed sensor - PF PWB • PF paper feed clutch - PF PWB • PF conveying motor - PF PWB • PF PWB - PF PWB (paper feeder/large capacity feeder) • PF PWB (paper feeder/large capacity feeder) - Engine PWB	
4	Checking the PF paper feed sensor	The PF paper feed sensor does not operate properly.	Clean and reattach the PF feed sensor,then reconnect the connector. If not repaired, replace it.	
5	Checking the PF paper feed clutch	The PF paper feed clutch does not operate properly.	Execute U247 [Side Feeder] > [Clutch] > [C1 Clutch]. If the PF feed clutch does not operate properly,reattach it and reconnect the connector. If not repaired, replace it.	
6	Checking the PF conveying motor	The PF conveying motor does not operate correctly.	Execute U247 [Side Deck] > [Motor] > [On]. If the PF conveying motor does not work properly,reinstall it and reconnect the connector. If it is not repaired, replace it.	
7	Replacing the PF PWB	The PF PWB is faulty.	Replace the PF PWB.	
8	Replacing the PF PWB (paper feeder or large capacity feeder)	Paper feeder ,or Large capacity feeder of the PF PWB is faulty.	Replace the paper feeder or the PF PWB of the large capacity feeder.	
9	Replacing the engine PWB	The engine PWB is faulty.	Replace the engine PWB.	

J0555: Multi-feeding from the side feeder

When feeding from cassette 5,the PF paper feed sensor does not turn off even after a specified time has elapsed.

Step	Check description	Assumed cause	Measures	Reference
1	Checking the paper	The cut-end of the paper is crushed.	Fan the paper well and load it by reversing the paper direction	
2	Checking the paper	The paper leading edge is bent.	Remove the bent paper.	
3	Checking the paper	foreign objects are on the paper.	Remove the paper with foreign objects.	
4	Checking the PF retard roller	The paper separation force of the PF retard roller is not enough. The PF retard roller contacts the PF feed roller unevenly.	Clean the surface of the PF retard roller. If it is worn out,replace it.	
5	Checking the PF retard spring	The PF retard spring comes off.	Reattach the PF retard spring.	
6	Checking the installation	There is no ground between the main unit and the side feeder.	Install the rail of the side feeder (Bundled items of the side feeder) to the main unit.	
7	Checking the connection	The connector is not connected properly,or the wire is faulty.	Clean the terminals of the wire connector below and reinsert them. If there is no continuity, replace the wire. • PF paper feed sensor - PF PWB • PF paper feed clutch - PF PWB • PF PWB - PF PWB (paper feeder/large capacity feeder) • PF PWB (paper feeder/large Capacity feeder) - Engine PWB	
8	Checking the PF paper feed sensor	The PF paper feed sensor does not operate properly.	Clean and reattach the PF feed sensor,then reconnect the connector. If not repaired, replace it.	
9	Checking the PF paper feed clutch	The rotation of the PF feed roller does not stop while the PF feed clutch remains engaged.	Execute U247 [Side Feeder] > [Clutch] > [C1 Clutch]. If the PF feed clutch does not operate properly,reattach it and reconnect the connector. If not repaired, replace it.	
10	Replacing the PF PWB	The PF PWB is faulty.	Replace the PF PWB.	
11	Replacing the PF PWB (paper feeder or large capacity feeder)	Paper feeder ,or Large capacity feeder of the PF PWB is faulty.	Replace the paper feeder or the PF PWB of the large capacity feeder.	
12	Replacing the engine PWB	The engine PWB is faulty.	Replace the engine PWB.	

J0566: IS upper feed tray no feeding JAM

The IS upper tray paper feed sensor does not turn on even after a specified time has passed after the IS upper tray paper feed motor is started. (Inserter)

Step	Check description	Assumed cause	Measures	Reference
1	Checking the paper (when the paper is stopped by the tray paper feed belt on IS)	The cut-end of the paper is crushed.	Clean the paper well and reload it.	
2	Check the paper (when the leading edge of the paper is broken)	Paper is curled downward or waving.	Remove the bent paper from the paper feed tray on the IS,and correct or replace the paper.	
3	Check the paper (when the leading edge of the paper is broken)	foreign objects are on the paper.	Remove the paper with foreign objects from the paper feed tray on the IS.	
4	Checking the paper (when the paper is stopped by the tray paper feed belt on IS)	Unspecified papers are used.	Explain to the user to use the paper within the specifications.	
5	Check the conveying path (when the leading edge of the paper is broken or is being conveying at an angle)	Paper is caught at the conveying guide,piece of paper,etc..	Remove any pieces of paper,foreign objects,or burrs on the conveying surface of the conveying guide in the conveying path. Or replace it.	
6	Checking the IS upper tray paper feed belt and drive gear (when paper is stopped on the IS upper tray paper feed belt)	Paper conveying capability is decreasing or slipping. (Rotation is not smooth)	Clean the surface of the tray feed belt on the IS. If it is worn out,replace it. Also,if there is foreign objects on the drive gear,remove it and replace it if it is damaged.	

J0567: IS lower feed tray no feeding JAM

The IS lower tray paper feed sensor does not turn on even after a specified time has passed since the IS lower tray paper feed motor was started. (Inserter)

Step	Check description	Assumed cause	Measures	Reference
1	Checking the paper (when the paper is stopped on the IS lower tray paper feed belt)	The cut-end of the paper is crushed.	Clean the paper well and reload it.	
2	Check the paper (when the leading edge of the paper is broken)	Paper is curled downward or waving.	Remove the bent paper from the IS bottom paper tray, and correct or replace the paper.	
3	Check the paper (when the leading edge of the paper is broken)	foreign objects are on the paper.	Remove the paper with foreign objects from the IS bottom paper tray.	
4	Checking the paper (when the paper is stopped on the IS lower tray paper feed belt)	Unspecified papers are used.	Explain to the user to use the paper within the specifications.	
5	Check the conveying path (when the leading edge of the paper is broken or is being conveying at an angle)	Paper is caught at the conveying guide,piece of paper,etc..	Remove any pieces of paper,foreign objects,or burrs on the conveying surface of the conveying guide in the conveying path. Or replace it.	
6	Checking the IS lower tray paper feed belt and drive gear (when paper is stopped on the IS lower tray paper feed belt)	Paper conveying capability is decreasing or slipping. (Rotation is not smooth)	Clean the surface of the IS lower tray paper feed belt. If it is worn out,replace it. Also,if there is foreign objects on the drive gear,remove it and replace it if it is damaged.	

J0576: IS upper tray feed sensor stay JAM

The IS upper tray paper feed sensor does not turn off even after a specified time has passed after the IS upper tray paper feed motor is started. (Inserter)

Step	Check description	Assumed cause	Measures	Reference
1	Checking the paper	The cut-end of the paper is crushed.	Clean the paper well and reload it.	
2	Checking the paper	Paper is curled or waved.	Correct or replace the paper.	
3	Check the tray feed belt and separation roller on the IS	The paper fanning is not enough.	Clean the IS top tray paper feed belt and the IS top tray separation roller. Or replace it.	
4	Checking the connection	The connector is not connected properly,or the wire is faulty.	Clean the terminals of the wire connector below and reinsert them. If there is no continuity, replace the wire. • IS upper tray paper feed sensor - IS PWB • IS PWB - Engine PWB	
5	Check the tray feed sensor on IS	The IS upper tray paper feed sensor is not operating properly.	Execute U241 [Inserter] > [Upper Tray Feed]. If the tray feed sensor on the IS does not work properly,clean it,reinstall it,and reconnect the connector. If it is not repaired, replace it.	
6	IS PWB replacement	The IS PWB is faulty.	Replace the IS PWB.	
7	Replacing the engine PWB	The engine PWB is faulty.	Replace the engine PWB.	

J0577: IS lower tray feed sensor stay JAM

The IS lower tray paper feed sensor does not turn off even after a specified time has passed after the IS lower tray paper feed motor is started. (Inserter)

Step	Check description	Assumed cause	Measures	Reference
1	Checking the paper	The cut-end of the paper is crushed.	Clean the paper well and reload it.	
2	Checking the paper	Paper is curled or waved.	Correct or replace the paper.	
3	Checking the IS lower tray paper feed belt and IS lower tray retard roller	The paper fanning is not enough.	Clean the IS lower tray paper feed belt and the IS lower tray retard roller. Or replace it.	
4	Checking the connection	The connector is not connected properly,or the wire is faulty.	Clean the terminals of the wire connector below and reinsert them. If there is no continuity, replace the wire. • IS lower tray paper feed sensor - IS PWB • IS PWB - Engine PWB	
5	Checking the IS lower tray paper feed sensor	The IS lower tray paper feed sensor is not operating properly.	Execute U241 [Inserter] > [Lower Tray Feed]. If the IS bottom tray paper feed sensor does not work properly,clean it,reinstall it,and reconnect the connector. If it is not repaired, replace it.	
6	IS PWB replacement	The IS PWB is faulty.	Replace the IS PWB.	
7	Replacing the engine PWB	The engine PWB is faulty.	Replace the engine PWB.	

J1403/J1404: Feed sensor2 non-arrival JAM

When feeding from cassettes 3 and 4,the paper feed sensor 2 does not turn on.
Condition: The paper is damaged. (Paper is caught. The conveying capability is low, or the paper is slipping.)

Step	Check description	Assumed cause	Measures	Reference
1	Checking the paper	The cut-end of the paper is crushed.	Fan the paper well and load it by reversing the paper direction	
2	Checking the paper	The paper leading edge is bent.	Remove the bent paper in the cassette.	
3	Checking the paper	Paper is curled downward or waving.	Correct or replace paper. If it is difficult to replace,switch the leading edge and the trailing edge of paper,or flip paper upside down and reset them.	
4	Checking the paper	foreign objects are on the paper.	Remove paper that the foreign objects adheres in the cassette.	
5	Checking the paper (if the paper is slipping)	Unspecified papers are used.	Explain to the user to use the paper within the specifications.	
6	Reloading the paper width guide (when the paper is being transported at an angle)	The locations of the paper width guides do not fit with the paper size.	Relocate the paper width guides to fit them with the paper size.	
7	Check the conveying path (when the leading edge of the paper is broken or is being conveying at an angle)	Paper is caught at the conveying guide,piece of paper,etc..	If a piece of paper or the foreign objects adhere on the conveying path,or a burr in the parts such as the conveying surface of the conveying guide or the actuator,remove or replace them. If the sheet or film has a damage,deformation,floating,repair or replace them.	
8	Checking the pressing spring (when the paper is being transported diagonally)	The pressure balance before and after the PF pickup roller is not appropriate.	Reinstall the pressing spring of the PF pickup roller. If it is deformed,correct it or replace it.	
9	Check the PF pickup roller and drive gear (when the paper is being transported diagonally or with a delay)	Paper conveying capability is decreasing or slipping. (Rotation is not smooth)	Clean the surface of the PF pickup roller. If it is worn out,replace it. Also,if there is foreign objects on the drive gear,remove it and replace it if it is damaged.	

J1403/J1404: Feed sensor2 non-arrival JAM

When feeding from cassettes 3 and 4,the paper feed sensor 2 does not turn on.
Condition: There is no damage to the paper. (The conveying drive does not start, or the conveying clutch does not operate properly.)

Step	Check description	Assumed cause	Measures	Reference
1	Checking the driving parts (when the paper is stopped by the PF conveying roller)	The PF feed motor drive is not transmitted correctly.	Check if the drive of the PF feed motor is transmitted to the PF drive unit and,clean and reattach the drive parts if necessary. If not repaired, replace the parts.	
2	Check connection (paper feeder)	The connector is not connected properly,or the wire is faulty.	Clean the terminals of the wire connector below and reinsert them. If there is no continuity, replace the wire. • Paper feed sensor 2 - Feed drive PWB • PF conveying clutch 1,2 - PF PWB • PF paper feed motor - PF PWB • Feed drive PWB - Engine PWB • PF PWB-engine PWB	
3	Checking the connection (large capacity feeder)	The connector is not connected properly,or the wire is faulty.	Clean the terminals of the wire connector below and reinsert them. If there is no continuity, replace the wire. • Paper feed sensor 2 - Feed drive PWB • PF horizontal conveying clutch 1,2 - PF PWB • PF paper feed motor - PF PWB • Feed drive PWB - Engine PWB • PF PWB - Engine PWB	
4	Checking the paper feed sensor 2	Paper feed sensor 2 is not operating properly.	Execute U031 [Cass2 Feed]. If Paper Feed Sensor 2 does not work properly,clean it,reinstall it,and reconnect the connector. If it is not repaired, replace it.	
5	Checking the PF conveying clutch (paper feeder)	PF conveying clutch does not operate correctly.	Execute U247 [2PF] > [Clutch] > [Feed1 Clutch] or [Feed2 Clutch]. If the PF conveying clutches 1 and 2 do not operate properly,reinstall and reconnect the connector. If it is not repaired, replace it.	
6	Checking the PF paper feed motor (paper feeder)	The PF feed motor does not operate correctly.	Execute U247 [2PF] > [Motor] > [On],and if the PF paper feed motor does not operate properly,reinstall it and reconnect the connector. If it is not repaired, replace it.	
7	Checking the PF horizontal conveying clutch (large capacity feeder)	The PF horizontal conveying clutch does not operate correctly.	Execute U247 [LCF] > [Clutch] > [Feed2 Clutch]. If the PF horizontal conveying clutch 1 or PF horizontal conveying clutch 2 does not operate properly,reinstall it and reconnect the connector. If it is not repaired, replace it.	
8	Checking the PF paper feed motor (large capacity feeder)	The PF feed motor does not operate correctly.	Execute U247 [LCF] > [Motor] > [On],and if the PF paper feed motor does not operate properly,reinstall it and reconnect the connector. If it is not repaired, replace it.	
9	Replacing the feed drive PWB	The feed drive PWB is faulty.	Replace the feed drive PWB.	
10	Replacing the PF PWB	The PF PWB is faulty.	Replace the PF PWB.	
11	Replacing the engine PWB	The engine PWB is faulty.	Replace the engine PWB.	

J1413/J1414: Feed sensor2 stay JAM

The paper feed sensor 2 does not turn off when feeding paper from cassettes 3 and 4.

Step	Check description	Assumed cause	Measures	Reference
1	Checking the paper	The cut-end of the paper is crushed.	Fan the paper well and load it by reversing the paper direction	
2	Checking the paper	The paper leading edge is bent.	Remove the bent paper in the cassette.	
3	Checking the paper	Paper is curled downward or waving.	Correct or replace paper. If it is difficult to replace,switch the leading edge and the trailing edge of paper,or flip paper upside down and reset them.	
4	Checking the paper	Unspecified papers are used.	Explain to the user to use the paper within the specifications.	
5	Checking the paper	foreign objects are on the paper.	Remove paper that the foreign objects adheres in the cassette.	
6	Reloading the paper width guide (when the paper is being transported at an angle)	The locations of the paper width guides do not fit with the paper size.	Relocate the paper width guides to fit them with the paper size.	
7	Checking the load capacity of paper (when the paper is being transported diagonally)	More than upper limit of paper is loaded.	Reset the number of sheets that fit in the upper limit label position.	
8	Checking the right cover 2	The right cover 2 is deformed.	Make sure that the right cover 2 is securely closed. If it does not close due to deformation,replace it.	
9	Check the conveying path (when the leading edge of the paper is broken or is being conveying at an angle)	Paper is caught at the conveying guide,piece of paper,etc..	If a piece of paper or the foreign objects adhere on the conveying path,or a burr in the parts such as the conveying surface of the conveying guide or the actuator,remove or replace them. If the sheet or film has a damage,deformation,floating,repair or replace them.	
10	Checking the transport guide (when the paper is being transported diagonally)	The paper is caught with the conveying guide.	Reattach the conveying guide. If a burr in the conveying surface of the conveying guide,remove or replace it.	
11	Checking the PF conveying roller and drive gear	Paper conveying capability is decreasing or slipping. (Rotation is not smooth)	Clean the surface of the PF conveying roller. If it is worn out,replace it. If there is foreign objects on the drive gear,remove it and replace it if it is damaged.	
12	Checking the pressing spring (when the paper is being transported diagonally)	The pressure balance before and after the PF pickup roller is not appropriate.	Reinstall the pressing spring of the PF pickup roller. If it is deformed,correct it or replace it.	
13	Check connection (paper feeder)	The connector is not connected properly,or the wire is faulty.	Clean the terminals of the wire connector below and reinsert them. If there is no continuity, replace the wire. • Paper feed sensor 2 - Feed drive PWB • PF conveying clutch 1,2 - PF PWB • Feed drive PWB - Engine PWB • PF PWB - Engine PWB	
14	Checking the connection (large capacity feeder)	The connector is not connected properly,or the wire is faulty.	Clean the terminals of the wire connector below and reinsert them. If there is no continuity, replace the wire. • Paper feed sensor 2 - Feed drive PWB • PF horizontal conveying clutch 1,2 - PF PWB • Feed drive PWB - Engine PWB • PF PWB - Engine PWB	

Step	Check description	Assumed cause	Measures	Reference
15	Checking the paper feed sensor 2	Paper feed sensor 2 is not operating properly.	Execute U031 [Cass2 Feed]. If Paper Feed Sensor 2 does not work properly,clean it,reinstall it,and reconnect the connector. If it is not repaired, replace it.	
16	Checking the PF conveying clutch (paper feeder)	PF conveying clutch does not operate correctly.	Execute U247 [2PF] > [Clutch] > [Feed1 Clutch] or [Feed2 Clutch]. If the PF conveying clutches 1 and 2 do not operate properly,reinstall and reconnect the connector. If it is not repaired, replace it.	
17	Checking the PF horizontal conveying clutch (large capacity feeder)	The PF horizontal conveying clutch does not operate correctly.	Execute U247 [LCF] > [Clutch] > [Feed2 Clutch]. If the PF horizontal conveying clutch 1 or PF horizontal conveying clutch 2 does not operate properly,reinstall it and reconnect the connector. If it is not repaired, replace it.	
18	Replacing the feed drive PWB	The feed drive PWB is faulty.	Replace the feed drive PWB.	
19	Replacing the PF PWB	The PF PWB is faulty.	Replace the PF PWB.	
20	Replacing the engine PWB	The engine PWB is faulty.	Replace the engine PWB.	

J1604: PF conveying sensor 1 non-arrival jam

The PF conveying sensor 1 does not turn on when feeding from cassette 4 (paper feeder).
Condition: The paper is damaged. (Paper is caught. The conveying capability is low, or the paper is slipping.)

Step	Check description	Assumed cause	Measures	Reference
1	Checking the paper	The cut-end of the paper is crushed.	Fan the paper well and load it by reversing the paper direction	
2	Checking the paper	foreign objects are on the paper.	Remove paper that the foreign objects adhere in the cassette.	
3	Check the paper (when the leading edge of the paper is broken)	The paper leading edge is bent.	Remove bent paper in the cassette.	
4	Check the paper (when the leading edge of the paper is broken)	Paper is curled downward or waving.	Correct or replace paper. If it is difficult to replace,switch the leading edge and the trailing edge of paper,or flip paper upside down and reset them.	
5	Checking the paper (if the paper is slipping)	Unspecified papers are used.	Explain to the user to use the paper within the specifications.	
6	Reloading the paper width guide (when the paper is being transported at an angle)	The locations of the paper width guides do not fit with the paper size.	Relocate the paper width guides to fit them with the paper size.	
7	Check the conveying path (when the leading edge of the paper is broken or is being conveying at an angle)	Paper is caught at the conveying guide,piece of paper,etc..	If a piece of paper or the foreign objects adhere on the conveying path,or a burr in the parts such as the conveying surface of the conveying guide or the actuator,remove or replace them. If the sheet or film has a damage,deformation,floating,repair or replace them.	
8	Checking the PF conveying roller and drive gear (when the paper is transported diagonally or with a delay)	Paper conveying capability is decreasing or slipping. (Rotation is not smooth)	Clean the surface of the PF conveying roller. If it is worn out,replace it. Also,if there is foreign objects on the drive gear,remove it and replace it if it is damaged.	
9	Checking the pressing spring (when the paper is being transported diagonally)	The pressure balance before and after the PF pickup roller is not appropriate.	Reinstall the pressing spring of the PF pickup roller. If it is deformed,correct it or replace it.	

J1604: PF vertical conveying sensor non-arrival jam

The PF vertical conveying sensor does not turn on when feeding from cassette 4 (large capability feeder).
Condition: The paper is damaged. (Paper is caught. The conveying capability is low, or the paper is slipping.)

Step	Check description	Assumed cause	Measures	Reference
1	Checking the paper	The cut-end of the paper is crushed.	Fan the paper well and load it by reversing the paper direction	
2	Checking the paper	foreign objects are on the paper.	Remove paper that the foreign objects adhere in the deck.	
3	Check the paper (when the leading edge of the paper is broken)	The paper leading edge is bent.	Remove bent paper in the deck.	
4	Check the paper (when the leading edge of the paper is broken)	Paper is curled downward or waving.	Correct or replace paper. If it is difficult to replace,switch the leading edge and the trailing edge of paper,or flip paper upside down and reset them.	
5	Checking the paper (if the paper is slipping)	Unspecified papers are used.	Explain to the user to use the paper within the specifications.	
6	Reloading the paper width guide (when the paper is being transported at an angle)	The locations of the paper width guides do not fit with the paper size.	Relocate the paper width guides to fit them with the paper size.	
7	Check the conveying path (when the leading edge of the paper is broken or is being conveying at an angle)	Paper is caught at the conveying guide,piece of paper,etc..	If a piece of paper or the foreign objects adhere on the conveying path,or a burr in the parts such as the conveying surface of the conveying guide or the actuator,remove or replace them. If the sheet or film has a damage,deformation,floating,repair or replace them.	
8	Checking the PF conveying roller and drive gear (when the paper is transported diagonally or with a delay)	Paper conveying capability is decreasing or slipping. (Rotation is not smooth)	Clean the surface of the PF conveying roller. If it is worn out,replace it. Also,if there is foreign objects on the drive gear,remove it and replace it if it is damaged.	
9	Checking the pressing spring (when the paper is being transported diagonally)	The pressure balance before and after the PF pickup roller is not appropriate.	Reinstall the pressing spring of the PF pickup roller. If it is deformed,correct it or replace it.	

J1604: PF conveying sensor 1 non-arrival jam

The PF conveying sensor 1 does not turn on when feeding from cassette 4 (paper feeder).
Condition: There is no damage to the paper. (Paper feed drive does not start, or PF conveying clutch 2 does not operate properly.)

Step	Check description	Assumed cause	Measures	Reference
1	Checking the driving parts (when the paper is stopped by the PF conveying roller)	The PF feed motor drive is not transmitted correctly.	Check if the drive of the PF feed motor is transmitted to the PF drive unit and,clean and reattach the drive parts if necessary. If not repaired, replace the parts.	
2	Checking the connection	The connector is not connected properly,or the wire is faulty.	Clean the terminal of the following wire connectors and reconnect the connectors. If there is no continuity, replace the wire. • PF conveying sensor 1 - PF PWB • PF conveying clutch 2 - PF PWB • PF feed motor - PF PWB • PF PWB - Engine PWB	
3	Checking PF conveying sensor 1	PF conveying sensor 1 does not operate normally	Clean and reattach the PF conveying sensor 1,then reconnect the connector. If not repaired, replace it.	
4	Checking the PF conveying clutch 2	The PF conveying clutch 2 is not operating properly.	Execute U247 [2PF] > [Clutch] > [Feed2 Clutch]. If the PF conveying clutch 2 does not operate properly,reinstall it and reconnect the connector. If it is not repaired, replace it.	
5	Checking the PF feed motor	The PF feed motor does not operate correctly.	If U247 [2PF] > [Motor] is executed and the PF paper feed motor does not operate properly,reinstall it and reconnect the connector. If it is not repaired, replace it.	
6	Replacing the PF PWB	The PF PWB is faulty.	Replace the PF PWB.	
7	Replacing the engine PWB	The engine PWB is faulty.	Replace the engine PWB.	

J1604: PF vertical conveying sensor non-arrival jam

The PF vertical conveying sensor does not turn on when feeding from cassette 4 (large capacity feeder).
Condition: There is no damage to the paper. (The PF horizontal conveying clutch and PF vertical conveying clutch do not operate properly.)

Step	Check description	Assumed cause	Measures	Reference
1	Checking the driving parts (when the paper is stopped by the PF conveying roller)	The PF feed motor drive is not transmitted correctly.	Check if the drive of the PF feed motor is transmitted to the PF drive unit and,clean and reattach the drive parts if necessary. If not repaired, replace the parts.	
2	Checking the connection	The connector is not connected properly,or the wire is faulty.	Clean the terminals of the wire connector below and reinsert them. If there is no continuity, replace the wire. • PF Vertical conveying Sensor - PF PWB • PF Horizontal conveying Clutch 2 - PF PWB • PF Vertical conveying Clutch - PF PWB • PF Paper Feed Motor - PF PWB • PF PWB - Engine PWB	
3	Checking the PF vertical conveying sensor	The PF vertical conveying sensor does not operate correctly.	Clean and reattach the PF vertical conveying sensor,then reconnect the connector. If not repaired, replace it.	
4	Checking the PF vertical conveying clutch	The PF vertical conveying clutch is not operating properly.	Execute U247 [LCF] > [Clutch] > [Feed1 Clutch]. If the PF vertical conveying clutch does not work properly,reinstall it and reconnect the connector. If it is not repaired, replace it.	
5	Checking the PF horizontal conveying clutch	The PF horizontal conveying clutch does not operate correctly.	Execute U247 [LCF] > [Clutch] > [Feed2 Clutch]. If the PF horizontal conveying clutch 2 does not operate properly,reinstall it and reconnect the connector. If it is not repaired, replace it.	
6	Checking the PF feed motor	The PF feed motor does not operate correctly.	If U247 [LCF] > [Motor] is executed and the PF paper feed motor does not operate properly,reinstall it and reconnect the connector. If it is not repaired, replace it.	
7	Replacing the PF PWB	The PF PWB is faulty.	Replace the PF PWB.	
8	Replacing the engine PWB	The engine PWB is faulty.	Replace the engine PWB.	

J1614: PF conveying sensor 1 stay jam

The PF conveying sensor 1 does not turn off when feeding from cassette 4 (paper feeder).

Step	Check description	Assumed cause	Measures	Reference
1	Checking the paper	The cut-end of the paper is crushed.	Fan the paper well and load it by reversing the paper direction	
2	Checking the paper	The paper leading edge is bent.	Remove the bent paper.	
3	Checking the paper	Paper is curled downward or waving.	Correct or replace paper. If it is difficult to replace,switch the leading edge and the trailing edge of paper,or flip paper upside down and reset them.	
4	Checking the paper	Unspecified papers are used.	Explain to the user to use the paper within the specifications.	
5	Checking the paper	foreign objects are on the paper.	Remove the paper with foreign objects.	
6	Reloading the paper width guide (when the paper is being transported at an angle)	The locations of the paper width guides do not fit with the paper size.	Relocate the paper width guides to fit them with the paper size.	
7	Checking the load capacity of paper (when the paper is being transported diagonally)	More than upper limit of paper is loaded.	Reset the number of sheets that fit in the upper limit label position.	
8	Check the right cover 2 (when paper conveying is delayed)	The right cover 2 is deformed.	Make sure that the right cover 2 is securely closed. If it does not close due to deformation,replace it.	
9	Check the conveying path (when the leading edge of the paper is broken or is being conveying at an angle)	Paper is caught at the conveying guide,piece of paper,etc..	If a piece of paper or the foreign objects adhere on the conveying path,or a burr in the parts such as the conveying surface of the conveying guide or the actuator,remove or replace them. If the sheet or film has a damage,deformation,floating,repair or replace them.	
10	Checking the PF conveying roller and drive gear	Paper conveying capability is decreasing or slipping. (Rotation is not smooth)	Clean the surface of the PF conveying roller. If it is worn out,replace it. If there is foreign objects on the drive gear,remove it and replace it if it is damaged.	
11	Checking the pressing spring (when the paper is being transported diagonally)	The pressure balance before and after the PF pickup roller is not appropriate.	Reinstall the pressing spring of the PF pickup roller. If it is deformed,correct it or replace it.	
12	Checking the connection	The connector is not connected properly,or the wire is faulty.	Clean the terminals of the wire connector below and reinsert them. If there is no continuity, replace the wire. • PF conveying sensor 1 - PF PWB • PF PWB - Engine PWB	
13	Checking PF conveying sensor 1	The PF conveying sensor 1 is not installed properly. The connector is not connected properly. Or,the wire is faulty.	Reattach PF conveying sensor 1 and reconnect the connector. If not repaired, replace it.	
14	Replacing the PF PWB	The PF PWB is faulty.	Replace the PF PWB.	
15	Replacing the engine PWB	The engine PWB is faulty.	Replace the engine PWB.	

J1614: PF vertical conveying sensor stay jam

The PF vertical conveying sensor does not turn off when feeding paper from cassette 4 (large capacity feeder).

Step	Check description	Assumed cause	Measures	Reference
1	Checking the paper	The cut-end of the paper is crushed.	Fan the paper well and load it by reversing the paper direction	
2	Checking the paper	The paper leading edge is bent.	Remove the bent paper.	
3	Checking the paper	Paper is curled downward or waving.	Correct or replace paper. If it is difficult to replace,switch the leading edge and the trailing edge of paper,or flip paper upside down and reset them.	
4	Checking the paper	Unspecified papers are used.	Explain to the user to use the paper within the specifications.	
5	Checking the paper	foreign objects are on the paper.	Remove the paper with foreign objects.	
6	Reloading the paper width guide (when the paper is being transported at an angle)	The locations of the paper width guides do not fit with the paper size.	Relocate the paper width guides to fit them with the paper size.	
7	Checking the load capacity of paper (when the paper is being transported diagonally)	More than upper limit of paper is loaded.	Reset the number of sheets that fit in the upper limit label position.	
8	Check the right cover 2 (when paper conveying is delayed)	The right cover 2 is deformed.	Make sure that the right cover 2 is securely closed. If it does not close due to deformation,replace it.	
9	Check the conveying path (when the leading edge of the paper is broken or is being conveying at an angle)	Paper is caught at the conveying guide,piece of paper,etc..	If a piece of paper or the foreign objects adhere on the conveying path,or a burr in the parts such as the conveying surface of the conveying guide or the actuator,remove or replace them. If the sheet or film has a damage,deformation,floating,repair or replace them.	
10	Checking the PF conveying roller and drive gear	Paper conveying capability is decreasing or slipping. (Rotation is not smooth)	Clean the surface of the PF conveying roller. If it is worn out,replace it. If there is foreign objects on the drive gear,remove it and replace it if it is damaged.	
11	Checking the pressing spring (when the paper is being transported diagonally)	The pressing balance before and after the conveying roller is not appropriate.	Reinstall the pressing spring of the conveying roller. If it is deformed,correct it or replace it.	
12	Checking the connection	The connector is not connected properly,or the wire is faulty.	Clean the terminal of the following wire connectors and reconnect the connectors. If there is no continuity, replace the wire. • PF vertical conveying sensor - PF PWB • PF PWB - Engine PWB	
13	Checking the PF vertical conveying sensor	The PF vertical conveying sensor does not operate correctly.	Clean and reattach the PF vertical conveying sensor,then reconnect the connector. If not repaired, replace it.	
14	Replacing the PF PWB	The PF PWB is faulty.	Replace the PF PWB.	
15	Replacing the engine PWB	The engine PWB is faulty.	Replace the engine PWB.	

J4001/J4002/J4003/J4004/J4005: Regist sensor non-arrival JAM

The Regist sensor does not turn on when feeding from cassettes 1 to 5.
Condition: The paper is damaged.

Step	Check description	Assumed cause	Measures	Reference
1	Check the paper (when the leading edge of the paper is broken)	The paper leading edge is bent.	Remove the bent paper in the cassette.	
2	Check the paper (when the leading edge of the paper is broken)	Paper is curled downward or waving.	Correct or replace paper. If it is difficult to replace,switch the leading edge and the trailing edge of paper,or flip paper upside down and reset them.	
3	Check the paper (when the leading edge of the paper is broken)	foreign objects are on the paper.	Remove paper that the foreign objects adheres in the cassette.	
4	Paper reloading (when the paper stops at the middle roller and the paper leading edge is folded)	The cut-end of the paper is crushed.	Fan the paper well and load it by reversing the paper direction	
5	Check the paper (when the paper is stopped by the middle roller)	Unspecified papers are used.	Explain to the user to use the paper within the specifications.	
6	Reloading the paper width guide (when the paper is being transported at an angle)	The locations of the paper width guides do not fit with the paper size.	Relocate the paper width guides to fit them with the paper size.	
7	Checking the load capacity of paper (when the paper is being transported diagonally)	More than upper limit of paper is loaded.	Reset the number of sheets that fit in the upper limit label position.	
8	Checking the right cover 2 (when paper conveying is delayed when feeding from cassettes 3 and 4)	The right cover 2 is deformed.	Make sure that the right cover 2 is securely closed. If it does not close due to deformation,replace it.	
9	Check the transport path (when there is a catch mark on the leading edge of the paper or the paper is being transported at an angle)	Paper is caught by foreign objects,a hole,a burr,etc. on the conveying surface of the conveying guide.	If the foreign objects,a burr are on the conveying surface of the conveying guide,remove or replace them. If the sheet guide has a damage,deformation,floating,repair or replace it.	
10	Check the conveying path (when the paper is Z-folded)	The conveying path is clogged with foreign objects such as a piece of paper,etc..	If the foreign objects,a burr are on the conveying surface of the conveying guide,remove or replace them. If there is a damage,replace them.	
11	Checking the middle rollers and drive gears (when the paper is being transported diagonally or the paper is Z-folded)	Paper conveying capability is decreasing or slipping. (Rotation is not smooth)	Clean the surface of the middle roller. If it is worn out,replace it. If there is foreign objects on the drive gear,remove it and replace it if it is damaged.	
12	Check the connection (when the paper is Z-folded and the paper is jammed in front of the Regist roller)	The connector is not connected properly,or the wire is faulty.	Clean the terminal of the following wire connectors and reconnect the connectors. If there is no continuity, replace the wire. • Registration sensor - Feed drive PWB • Middle clutch - Feed drive PWB • Feed drive PWB - Engine PWB	
13	Checking the registration sensor	The registration sensor does not operate properly.	Execute U031 [Regist]. If the registration sensor does not operate properly,clean and reattach it then reconnect the connector. If not repaired, replace it.	

Step	Check description	Assumed cause	Measures	Reference
14	Checking the middle clutch	When the paper is stopped at the middle roller: The middle roller does not rotate because the middle clutch does not turn on. If the paper is Z-folded and the paper is jammed in front of the Regist roller: The middle roller does not stop rotating with the middle clutch engaged.	Execute U032 [Middle]. If the middle clutch does not operate correctly,reattach it and reconnect the connector. If not repaired, replace it.	
15	Replacing the feed drive PWB	The feed drive PWB is faulty.	Replace the feed drive PWB.	
16	Replacing the engine PWB	The engine PWB is faulty.	Replace the engine PWB.	

J4001/J4002/J4003/J4004/J4005: Regist sensor non-arrival JAM

The Regist sensor does not turn on when feeding from cassettes 1 to 5.
Condition: There is no damage to the paper. (The middle roller is not rotating. The middle clutch is not operating properly.)

Step	Check description	Assumed cause	Measures	Reference
1	Checking the driving parts (when the paper is stopped by the middle roller)	The feed motor drive does not transmit to the middle roller.	Check if the drive of the feed motor is transmitted to the feed drive unit and,clean and reattach the drive parts if necessary. If not repaired, replace the parts.	
2	Setting the amount of paper deflection (when the paper is jammed in front of the Regist roller)	The paper is not sufficiently pinched between the registration rollers.	Set the paper loop amount at U051.	
3	Checking the connection	The connector is not connected properly,or the wire is faulty.	Clean the terminal of the following wire connectors and reconnect the connectors. If there is no continuity, replace the wire. • Registration sensor - Feed drive PWB • Middle clutch - Feed drive PWB • Feed motor - Feed drive PWB • Feed drive PWB - Engine PWB	
4	Checking the registration sensor	The registration sensor does not operate properly.	Execute U031 [Regist]. If the registration sensor does not operate properly,clean and reattach it then reconnect the connector. If not repaired, replace it.	
5	Checking the middle clutch	The middle clutch does not operate properly.	Execute U032 [Middle]. If the middle clutch does not operate correctly,reattach it and reconnect the connector. If not repaired, replace it.	
6	Checking the feed motor	The feed motor does not operate correctly.	Execute U030 [Feed]. If the feed motor does not operate correctly,reattach it and reconnect the connector. If not repaired, replace it.	
7	Replacing the feed drive PWB	The feed drive PWB is faulty.	Replace the feed drive PWB.	
8	Replacing the engine PWB	The engine PWB is faulty.	Replace the engine PWB.	

J4011/J4012/J4013/J4014/J4015: Regist sensor stay JAM

The Regist sensor does not turn off when feeding from cassettes 1 to 5.

Step	Check description	Assumed cause	Measures	Reference
1	Checking the paper	The paper leading edge is bent.	Remove the bent paper in the cassette.	
2	Checking the paper	Paper is curled downward or waving.	Correct or replace paper. If it is difficult to replace,switch the leading edge and the trailing edge of paper,or flip paper upside down and reset them.	
3	Checking the paper	Unspecified papers are used.	Explain to the user to use the paper within the specifications.	
4	Checking the paper	foreign objects are on the paper.	Remove paper that the foreign objects adheres in the cassette.	
5	Reloading the paper width guide (when the paper is being transported at an angle)	The locations of the paper width guides do not fit with the paper size.	Relocate the paper width guides to fit them with the paper size.	
6	Checking the load capacity of paper (when the paper is being transported diagonally)	More than upper limit of paper is loaded.	Reset the number of sheets that fit in the upper limit label position.	
7	Reloading paper (when paper is double-fed)	The cut-end of the paper is crushed.	Fan the paper well and load it by reversing the paper direction	
8	Check the conveying path (when the leading edge of the paper is broken or is being conveying at an angle)	Paper is caught at the conveying guide,piece of paper,etc..	If a piece of paper or the foreign objects adhere on the conveying path,or a burr in the parts such as the conveying surface of the conveying guide or the actuator,remove or replace them. If the sheet or film has a damage,deformation,floating,repair or replace them.	
9	Check the paper feed roller and retard roller (when the paper is double-fed)	The paper separation force of the retard roller is not enough. The retard roller contacts the feed roller unevenly.	Clean the feed roller and the retard roller. And replace them.	
10	Checking the pressing spring (when the paper is being transported diagonally)	Pressure balance of front and rear of the conveying related rollers are not proper.	Reattach the pressure spring of the conveying related rollers. If it is deformed,repair or replace it.	
11	Checking the conveying rollers	The paper conveying force of the conveying rollers is insufficient.	Clean or replace the conveying related rollers.	
12	Checking the connection	The connector is not connected properly,or the wire is faulty.	Clean the terminal of the following wire connectors and reconnect the connectors. If there is no continuity, replace the wire. • Registration sensor - Feed drive PWB • Registration clutch - Feed drive PWB • Feed drive PWB - Engine PWB	
13	Checking the registration sensor	The registration sensor does not operate properly.	Execute U031 [Regist]. If the registration sensor does not operate properly,clean and reattach it then reconnect the connector. If not repaired, replace it.	
14	Checking the registration clutch	The registration clutch does not operate properly.	Execute U032 [Regist]. If the registration clutch does not operate correctly,reattach it and reconnect the connector. If not repaired, replace it.	
15	Replacing the feed drive PWB	The feed drive PWB is faulty.	Replace the feed drive PWB.	
16	Replacing the engine PWB	The engine PWB is faulty.	Replace the engine PWB.	

J4101/J4102/J4103/J4104/J4105/J4108/J4109: Belt winding sensor non-arrival jam

The belt wrapping sensor does not turn on when feeding from cassettes 1 to 5, both sides, or the multi bypass tray.
Conditions: Paper jam on the primary conveying belt (paper is not separated from the belt)

Step	Check description	Assumed cause	Measures	Reference
1	Checking the settings	The actual paper and the paper settings (media type,paper size) do not match.	Set the proper media type via the System Menu.	
2	Checking the paper	Unspecified papers are used.	Explain to the user to use the paper within the specifications.	
3	Cleaning of static eliminator needle and static eliminator sheet	Toner,paper dust are sticking to the discharge needle or separation sheet,and separation performance is decreasing.	Clean the static elimination needle and static elimination sheet on the top of the secondary conveying roller.	
4	Checking the conveying unit	The connector at the paper conveying unit that connects to the main unit is not properly connected. (Loose connection,etc.)	Reconnect the connector between the paper conveying unit and the main unit.	
5	Checking the connection	The connector is not connected properly,or the wire is faulty.	Clean the terminals of the wire connector below and reinsert them. If there is no continuity, replace the wire. • Conveying unit (belt wrapping sensor) - Feed drive PWB • Feed drive PWB - Engine PWB	
6	Checking the belt winding sensor	The belt winding sensor does not operate properly.	Execute U031 [Belt Jam]. If the belt roll-up sensor does not operate properly,clean and reattach it then reconnect the connector. If not repaired, replace it.	
7	Execute U108	The separation shift bias ON timing of paper leading edge is late.	Change the setting [On Lead] at U108 [Timing] back to the default value.	
8	Replacing the feed drive PWB	The feed drive PWB is faulty.	Replace the feed drive PWB.	
9	Replacing the engine PWB	The engine PWB is faulty.	Replace the engine PWB.	

J4101/J4102/J4103/J4104/J4105/J4108/J4109: Belt winding sensor non-arrival jam

The belt wrapping sensor does not turn on when feeding from cassettes 1 to 5, both sides, or the multi bypass tray.
Conditions: Paper jam after passing through the secondary conveying roller (belt wrapping sensor does not detect)

Step	Check description	Assumed cause	Measures	Reference
1	Checking the conveying unit	The connector at the paper conveying unit that connects to the main unit is not properly connected. (Loose connection,etc.)	Reconnect the connector between the paper conveying unit and the main unit.	
2	Checking the connection	The connector is not connected properly,or the wire is faulty.	Clean the terminals of the wire connector below and reinsert them. If there is no continuity, replace the wire. • Conveying unit (belt wrapping sensor) - Feed drive PWB • Feed drive PWB - Engine PWB	
3	Checking the belt winding sensor	The belt winding sensor does not operate properly.	Execute U031 [Belt Jam]. If the belt roll-up sensor does not operate properly,clean and reattach it then reconnect the connector. If not repaired, replace it.	
4	Replacing the feed drive PWB	The feed drive PWB is faulty.	Replace the feed drive PWB.	
5	Replacing the engine PWB	The engine PWB is faulty.	Replace the engine PWB.	

J4101/J4102/J4103/J4104/J4105/J4108/J4109: Belt winding sensor non-arrival jam

The belt wrapping sensor does not turn on when feeding from cassettes 1 to 5, both sides, or the multi bypass tray.
Conditions: Paper jam in front of the secondary conveying roller

Step	Check description	Assumed cause	Measures	Reference
1	Changing the setting	The actual paper and the paper settings (media type,paper size) do not match.	Set the proper media type via the System Menu.	
2	Setting the paper loop amount	The paper is not sufficiently pinched between the registration rollers.	Set the paper loop amount at U051.	
3	Check the conveying path (when the leading edge of the paper is damaged)	Paper is caught at the conveying guide,piece of paper,etc..	If a piece of paper or the foreign objects adhere on the conveying path,or a burr in the parts such as the conveying surface of the conveying guide or the actuator,remove or replace them. If the sheet or film has a damage,deformation,floating,repair or replace them.	
4	Replacing the paper and installing the cassette heater (if there is damage in the middle of the paper)	Paper stiffness is weakening due to moisture absorption.	Perform printing on the paper immediately after opening and check if there is any difference in the phenomenon. If there is no problem with the paper immediately after opening,replace the paper. Also,consider installing a cassette heater.	
5	Reattach the pre-conveying guide (if the paper edge is damaged)	Paper is caught in clearance of the transfer forwarding guide.	Reattach the transfer forwarding guide.	
6	Check the Regist guide sheet (if there is damage in the middle of the paper)	Paper is caught in the registration guide sheet.	If the registration guide sheet has a damage,deformation,floating,repair or replace it.	
7	Checking the secondary transfer roller	The secondary transfer roller does not rotate properly.	Reclose the right cover so that the drive of the primary conveying belt is transmitted to the secondary conveying roller. If the secondary conveying roller is deformed,the drive gear is damaged,or the bearing is scraped,replace the secondary conveying roller unit.	
8	Checking the drive gear	The drive is not transmitted to the registration roller.	Repair or replace the drive gears transmitting the drive of the feed motor to the registration roller.	
9	Checking the conveying unit	The connector at the paper conveying unit that connects to the main unit is not properly connected. (Loose connection,etc.)	Reconnect the connector between the paper conveying unit and the main unit.	
10	Checking the connection	The connector is not connected properly,or the wire is faulty.	Clean the terminal of the following wire connectors and reconnect the connectors. If there is no continuity, replace the wire. • Registration clutch - Feed drive PWB • Feed drive PWB - Engine PWB	
11	Checking the registration clutch	The registration clutch does not operate properly.	Execute U032 [Regist]. If the registration clutch does not operate correctly,reattach it and reconnect the connector. If not repaired, replace it.	
12	Replacing the feed drive PWB	The feed drive PWB is faulty.	Replace the feed drive PWB.	
13	Replacing the engine PWB	The engine PWB is faulty.	Replace the engine PWB.	

J4111/J4112/J4113/J4114/J4115/J4118/J4119: Belt winding sensor stay jam

The belt wrapping sensor does not turn off when feeding from cassettes 1 to 5, both sides, or the multi bypass tray.

Step	Check description	Assumed cause	Measures	Reference
1	Performing the prior standard check items	There is a mechanical cause such as the dirty guide,etc.	Perform the prior standard check items.	
2	Reloading the paper width guide (when the paper is being transported at an angle)	The locations of the paper width guides do not fit with the paper size.	Relocate the paper width guides to fit them with the paper size.	
3	Check the conveying path (when the leading edge of the paper is broken or is being conveying at an angle)	Paper is caught in the fuser entrance guide.	If a piece of paper,the foreign objects are on the conveying path,or the foreign objects,a burr are on the conveying surface of the fuser entrance guide,remove them. Or,replace the fuser entrance guide. If the sheet or the film is dropped off,repair or replace them.	
4	Checking the conveying unit	The connector at the paper conveying unit that connects to the main unit is not properly connected. (Loose connection,etc.)	Reconnect the connector between the paper conveying unit and the main unit.	
5	Checking the connection	The connector is not connected properly,or the wire is faulty.	Clean the terminals of the wire connector below and reinsert them. If there is no continuity, replace the wire. • Conveying unit (belt wrapping sensor) - Feed drive PWB • Feed drive PWB - Engine PWB	
6	Checking the belt winding sensor	The belt winding sensor does not operate properly.	Execute U031 [Belt Jam]. If the belt roll-up sensor does not operate properly,clean and reattach it then reconnect the connector. If not repaired, replace it.	
7	Replacing the feed drive PWB	The feed drive PWB is faulty.	Replace the feed drive PWB.	
8	Replacing the engine PWB	The engine PWB is faulty.	Replace the engine PWB.	

J4201/J4202/J4203/J4204/J4205/J4208/J4209: Fuser sensor non-arrival jam

When feeding from cassettes 1 to 5, both sides, or the multi bypass tray, the paper jams in the fuser part and the fuser sensor does not turn on.

Step	Check description	Assumed cause	Measures	Reference
1	Changing the setting	The actual paper and the paper settings (media type,paper size) do not match.	Set the proper media type via the System Menu.	
2	Replacing paper	The paper curls.	Replace with paper with a different eye direction.	
3	Checking the paper	The paper leading edge is bent.	Remove the bent paper.	
4	Checking the paper	The paper is wavy.	Correct or replace paper. If it is difficult to replace,switch the leading edge and the trailing edge of paper,or flip paper upside down and reset them.	
5	Checking the paper	Unspecified papers are used.	Explain to the user to use the paper within the specifications.	
6	Checking the paper	foreign objects are on the paper.	Remove the paper with foreign objects.	
7	Check actuators and springs (if the paper is jammed like an accordion)	The actuator does not operate properly.	Reinstall the anchor sensor actuator and spring. If it is not operating properly due to deformation,etc.,replace the fuser unit.	
8	Checking the fuser exit guide	Paper is caught in the conveying surface of the fuser exit guide.	If there is toner welding or burrs on the conveying surface of the fuser eject guide,remove it. If it cannot be completely removed,replace the fuser unit.	
9	Checking the fuser unit	The foreign objects adhere on the fuser pressure roller,fuser belt or fuser forwarding guide.	Perform a duplex copy of the solid image and clean the fuser pressure roller and fuser belt. Or clean the pre-fuser guide with a dry cloth. If it does not repair,replace the fuser unit.	

J4201/J4202/J4203/J4204/J4205/J4208/J4209: Fuser sensor non-arrival jam

When feeding from cassettes 1 to 5, both sides, or the multi bypass tray, the paper wraps around the fuser roller and the fuser sensor does not turn on. (Leading edge margin is less than 4.0 mm)

Step	Check description	Assumed cause	Measures	Reference
1	Executing U034	The margin at the paper leading edge is incorrect.	If each margin does not vary,adjust the leading edge timing with U034 [Start Position].	
2	Reloading the paper width guide (when the paper is being transported at an angle)	The locations of the paper width guides do not fit with the paper size.	Relocate the paper width guides to fit them with the paper size.	
3	Checking the paper	The paper leading edge is bent.	Remove the bent paper.	
4	Checking the paper	The paper is wavy.	Correct or replace paper. If it is difficult to replace,switch the leading edge and the trailing edge of paper,or flip paper upside down and reset them.	
5	Checking the paper	Unspecified papers are used.	Explain to the user to use the paper within the specifications.	
6	Checking the paper	foreign objects are on the paper.	Remove the paper with foreign objects.	
7	Replacing paper	The paper curls.	Replace with paper with a different eye direction.	
8	Cleaning of fuser pressure roller and fuser belt	The foreign objects adhere to the fuser pressure roller or the fuser belt.	Perform a duplex copy of the solid image and clean the fuser pressure roller and fuser belt.	
9	Checking the fuser unit	Toner or etc. adheres to the fuser separation plate,or there is deformation or floating.	If the toner,etc. are on the fuser separation plate,remove them. If it is deformed,replace the fuser unit.	

J4201/J4202/J4203/J4204/J4205/J4208/J4209: Fuser sensor non-arrival jam

When feeding from cassettes 1 to 5, both sides, or the multi bypass tray, the paper wraps around the fuser roller and the fuser sensor does not turn on. (Leading edge margin is 4.0 mm or more)

Step	Check description	Assumed cause	Measures	Reference
1	Replacing paper	The paper curls.	Replace with paper with a different eye direction.	
2	Image confirmation (when using thin paper)	Thin paper of 55g or less is used and the solid image of 30mm and more appears at the leading edge.	Change the paper type of the cassette used in the system menu to [Custom 7],and change the paper weight of "Custom 7" to [Light]. Custom 7+ thin paper setting: Mode to deal with fuser separation failure by lowering the conveying speed and fuser temperature (After changing the setting,"Adjusting" is displayed until the fuser temperature drops.)	
3	Cleaning of fuser pressure roller and fuser belt	The foreign objects adhere to the fuser pressure roller or the fuser belt.	Perform a duplex copy of the solid image and clean the fuser pressure roller and fuser belt.	
4	Checking the fuser separation plate	Toner or etc. adheres to the fuser separation plate,or there is deformation or floating.	If the toner,etc. are on the fuser separation plate,remove them. If it is deformed,replace the fuser unit.	

J4201/J4202/J4203/J4204/J4205/J4208/J4209: Fuser sensor non-arrival jam

When feeding from cassettes 1 to 5, both sides, or the multi bypass tray, the paper has passed through the fuser eject roller and is jammed, but the fuser sensor does not turn on.

Step	Check description	Assumed cause	Measures	Reference
1	Checking the paper	The paper leading edge is bent.	Remove the bent paper.	
2	Checking the paper	The paper is wavy.	Correct or replace paper. If it is difficult to replace,switch the leading edge and the trailing edge of paper,or flip paper upside down and reset them.	
3	Checking the paper	Unspecified papers are used.	Explain to the user to use the paper within the specifications.	
4	Checking the paper	foreign objects are on the paper.	Remove the paper with foreign objects.	
5	Check actuators and springs (when paper is being transported at an angle)	The actuator does not operate properly.	Reinstall the anchor sensor actuator and spring. If it is not operating properly due to deformation,etc.,replace the fuser unit.	
6	Checking the fuser and discharging guide (when the paper is being transported diagonally)	The fuser exit guide is deformed.	Reinstall the fuser and discharging guide. If the conveying surface of the fuser eject guide is warped,replace the fuser unit.	
7	Checking the fuser and discharging roller (when the paper is being transported diagonally)	The conveying capability of the fuser exit roller is not enough.	Clean the anchorage eject roller. If the surface is worn out,replace the anchoring unit.	
8	Reinstalling the fuser unit	The drawer connector of the fuser unit is not connected properly.	Reinstall the fuser unit.	
9	Checking the connection	The connector is not connected properly,or the wire is faulty.	Clean the terminals of the wire connector below and reinsert them. If there is no continuity, replace the wire. • Fuser unit (fuser sensor) - Image drive PWB • Image drive PWB - Engine PWB	
10	Checking the fuser sensor	The fuser sensor does not operate properly.	Execute U031 [Fuser Feed]. If the anchoring sensor does not work properly,replace the anchoring unit.	
11	Replacing the image drive PWB	The image drive PWB is faulty.	Replacing the image drive PWB	
12	Replacing the engine PWB	The engine PWB is faulty.	Replace the engine PWB.	

J4211/J4212/J4213/J4214/J4215/J4218/J4219: Fuser sensor stay jam

When feeding from cassettes 1 to 5, both sides, or the multi bypass tray, a paper jam occurs in front of the eject roller and the fuser sensor does not turn off.

Step	Check description	Assumed cause	Measures	Reference
1	Replacing paper	The paper curls.	Replace with paper with a different eye direction.	
2	Paper replacement and cassette heater installation	Due to steam generated from paper,paper sticks to the exit guide.	Perform printing on the paper immediately after opening and check if there is any difference in the phenomenon. If there is no problem with the paper immediately after opening,replace the paper. Also,consider installing a cassette heater.	
3	Checking the exit guide	Paper is caught in the exit guide,a piece of paper,etc..	If there is a piece of paper or foreign objects on the conveying path,or if there is a burr on the conveying surface of the eject guide or parts such as the actuator,remove it. If toner is welded to the conveying surface of the eject guide,clean it. If it is not repaired, replace it.	
4	Checking the actuator	The actuator is not attached properly.	Reattach the actuator for the fuser sensor.	
5	Reinstallation of fuser unit or eject unit	The fuser unit or the exit unit is not installed properly.	Reinstall the fuser unit and the exit unit,and reconnect the connector of the exit unit.	
6	Checking the exit roller and the drive parts	The exit roller or drive parts do not operate correctly.	Reinstall the eject unit so that the drive of the rear eject motor is transmitted to the upper eject roller and the lower eject roller. Also,if the drive gear of each roller is deformed or the bearing is scraped,replace it.	
7	reattaching corrugation parts	Corrugation parts do not operate correctly.	Reattach the corrugation parts in the exit unit. (Parts to add stiffness to the output paper)	
8	Checking the connection	The connector is not connected properly,or the wire is faulty.	Clean the terminals of the wire connector below and reinsert them. If there is no continuity, replace the wire. • Fuser unit (fuser sensor) - Image drive PWB • Eject rear motor - Front drive PWB • Front drive PWB - Image drive PWB • Image drive PWB - Engine PWB	
9	Checking the connection (when it occurs when ejecting paper to the job separator tray or when conveying both sides)	The connector is not connected properly,or the wire is faulty.	Clean the terminals of the wire connector below and reinsert them. If there is no continuity, replace the wire. • Eject reversing motor - Front drive PWB	
10	Checking the fuser sensor	The fuser sensor does not operate properly.	Execute U031 [Fuser Feed]. If the anchoring sensor does not work properly,replace the anchoring unit.	
11	Checking the exit motor	The exit motor does not operate correctly.	Execute U030 [Exit]. If the rear motor does not work properly,reinstall it and reconnect the connector. If it is not repaired, replace it.	
12	Checking the eject reversing motor (when it occurs during job separator or duplex conveying)	The exit reverse motor does not operate properly.	Execute U030 [SB (CW)] or [SB (CCW)]. If the eject reversing motor does not work properly,reinstall it and reconnect the connector. If it is not repaired, replace it.	
13	Replacing the front drive PWB	The front drive PWB is faulty.	Replacing the front drive PWB	
14	Replacing the image drive PWB	The image drive PWB is faulty.	Replacing the image drive PWB	

Step	Check description	Assumed cause	Measures	Reference
15	Replacing the engine PWB	The engine PWB is faulty.	Replace the engine PWB.	

J4211/J4212/J4213/J4214/J4215/J4218/J4219: Fuser sensor stay jam

When feeding from cassettes 1 to 5, both sides, or the multi bypass tray, a paper jam occurs at the output section and the fuser sensor does not turn off.

Step	Check description	Assumed cause	Measures	Reference
1	Check the tray	There is an obstacle on the tray.	Remove any obstacles on the tray.	
2	Check the paper ejection stopper (when ejecting to the internal tray or job separator tray)	The paper ejection stopper is not stored.	Store the paper eject stopper on the internal tray or job separator tray.	
3	Reloading the paper width guide (when the paper is being transported at an angle)	The locations of the paper width guides do not fit with the paper size.	Relocate the paper width guides to fit them with the paper size.	
4	Checking the secondary conveying holder (when the paper is being transported diagonally)	The paper gets caught in the secondary conveying holder upstream of the fuser unit.	Reinstall the secondary conveying holder (the guide to which the static elimination needle is attached). If there are burrs on the conveying surface,remove them. Or replace it.	
5	Checking the exit guide	Foreign objects such as toner are on the exit guide.	Clean the eject guide. If you cannot remove the foreign objects,replace the eject guide.	
6	Checking the exit roller	The exit roller does not rotate.	If the drive gear of the eject roller is deformed or the bearing is scraped,replace it.	
7	Reattach the fuser unit or ejection unit (when the sensor does not turn on with paper)	The fuser unit or the exit unit is not installed properly.	Reinstall the fuser unit and the exit unit,and reconnect the connector of the exit unit.	
8	Checking the connection	The connector is not connected properly,or the wire is faulty.	Clean the terminals of the wire connector below and reinsert them. If there is no continuity, replace the wire. • Eject rear motor - Front drive PWB • Fuser unit (fuser sensor) - Image drive PWB • Eject reversing motor - Front drive PWB • Front drive PWB - Image drive PWB • Image drive PWB - Engine PWB	
9	Checking the exit rear motor	The rear motor is not working properly.	Execute U030 [Exit]. If the rear motor does not work properly,reinstall it and reconnect the connector. If it is not repaired, replace it.	
10	Checking the actuator and the spring	The actuator does not operate properly.	Reinstall the anchor sensor actuator and spring. If it is not operating properly due to deformation,etc.,replace the fuser unit.	
11	Checking the fuser sensor	The fuser sensor does not operate properly.	Execute U031 [Fuser Feed]. If the anchoring sensor does not work properly,replace the anchoring unit.	
12	Checking the eject reversing motor (when it occurs during job separator or duplex conveying)	The exit reverse motor does not operate properly.	Execute U030 [SB (CW)] or [SB (CCW)]. If the eject reversing motor does not work properly,reinstall it and reconnect the connector. If it is not repaired, replace it.	
13	Replacing the front drive PWB	The front drive PWB is faulty.	Replacing the front drive PWB	
14	Replacing the image drive PWB	The image drive PWB is faulty.	Replacing the image drive PWB	
15	Replacing the engine PWB	The engine PWB is faulty.	Replace the engine PWB.	

J4211/J4212/J4213/J4214/J4215/J4218/J4219: Fuser sensor stay jam

When feeding LetterR or Legal from cassettes 1 to 5 (excluding large-capacity feeders), duplex section, and multi bypass tray, the paper leading edge angle gets caught in the PH cutter receiving hole of the punch unit (for inner finisher), causing a paper jam. The fuser sensor does not turn off.

Step	Check description	Assumed cause	Measures	Reference
1	Reloading the paper	The paper is curled upward. And so,it is easy to be caught by the PH cutter receiving hole.	Reload paper upside down.	
2	Relocating the paper width guides	Paper skew occurs since there is a gap between the paper width guides and the paper edges.	Relocate the paper width guides so that there is no gap between them to the paper edges.	
3	Explanation for user (request to change from "LetterR" to "Letter")	The corners of the paper leading edge of LetterR are close to the PH cutter receiving holes of the punch unit. Consequently,the corners are caught by the holes if each center position is not adjusted.	Request user to feed paper as "Letter" not but "LetterR". If user accepts,relocate the paper width guides to "Letter" position and load the paper. Then,explain users who need to change "Orientation" in Quick Print on the printer drive so that the orientation is rotated to 90 degrees C.	
4	Adjusting the center positions of the punch unit and the paper width guides	The center positions of the punch unit and the paper width guides are mismatched,and so,the corners of the paper leading edge is caught by the PH cutter receiving holes of the punch unit.	Adjust each center position by the following procedures. (Refer to the reference document" for the details.) 1. Load paper on the MP tray. Then,set the punch holes and execute the test print to align the position of the punch unit. 2. Feed paper from each paper source except the MP tray to check if the forward and backward punch holes are not shifted. 3. If the forward and backward punch holes are shifted aside in above 2,change the center position of the paper width guides to adjust. After changing the center position,execute U034 [Center Line] and adjust the center line except for "MPT".	

J4211/J4212/J4213/J4214/J4215/J4218/J4219: Fuser sensor stay jam

When feeding from cassettes 1 to 5, both sides, or the multi bypass tray, a paper jam occurs at the eject feedshift guide and the fuser sensor does not turn off.

Step	Check description	Assumed cause	Measures	Reference
1	Checking the paper	Unspecified papers are used.	Explain to the user to use the paper within the specifications.	
2	Checking the paper	foreign objects are on the paper.	Remove the paper with foreign objects.	
3	Checking the paper	The paper leading edge is bent.	Remove the bent paper.	
4	Checking the paper	The paper is wavy.	Correct or replace paper. If it is difficult to replace,switch the leading edge and the trailing edge of paper,or flip paper upside down and reset them.	
5	Paper replacement (when a paper jam occurs in the middle of the eject feedshift guide)	The paper curls.	Replace with paper with a different eye direction.	
6	Replacing paper and installing cassette heater (when paper jams in the middle of the eject feedshift guide)	Paper stiffness is weakening due to moisture absorption.	Perform printing on the paper immediately after opening and check if there is any difference in the phenomenon. If there is no problem with the paper immediately after opening,replace the paper. Also,consider installing a cassette heater.	
7	Checking the paper (when a paper jam occurs in the middle of the eject feedshift guide)	The actual paper and the paper settings (media type,paper size) do not match.	Set the proper media type via the System Menu.	
8	Checking the conveying path (when the paper collides with the eject feedshift guide and causes a paper jam)	Paper is caught in the exit feed-shift guide,a piece of paper,etc..	If a piece of paper,the foreign objects are on the conveying path,or a burr in the parts such as the conveying surface of the exit feed-shift guide or the actuator,remove or replace them.	
9	Cleaning the eject feedshift guide (when paper sticks to the eject feedshift guide and causes a paper jam)	Toner is welded to the exit feed-shift guide.	Clean the conveying surface of the exit feed-shift guide.	
10	Checking the eject feedshift guide (when the paper collides with the eject feedshift guide and causes a paper jam)	The exit feed-shift guide does not operate correctly.	Reinstall the eject feedshift guide. If it is deformed or damaged,replace it.	
11	Checking the eject unit (when the paper collides with the eject feedshift guide and causes a paper jam)	The eject unit connector is not properly connected and the eject feedshift guide is not working properly.	Reconnect the connector of the exit unit.	
12	Check the connection (when the paper collides with the eject feedshift guide and causes a paper jam)	The connector is not connected properly,or the wire is faulty.	Clean the terminals of the wire connector below and reinsert them. If there is no continuity, replace the wire. • Eject upper solenoid/Eject lower solenoid - Front drive PWB • Front drive PWB - Image drive PWB • Image drive PWB - Engine PWB	
13	Checking the eject solenoid (when the paper collides with the eject feedshift guide and causes a paper jam)	The exit solenoid does not operate correctly.	Execute U033 [Branch Eject Up] or [Branch Eject Down] to check the exit feed-shift guide operation. If it does not operate correctly,reattach the exit upper solenoid or the exit lower solenoid and reconnect the connector. If not repaired, replace it.	

Step	Check description	Assumed cause	Measures	Reference
14	Replacing the front drive PWB (when paper collides with the eject feedshift guide and causes a paper jam)	The front drive PWB is faulty.	Replacing the front drive PWB	
15	Replacing the image drive PWB (when paper collides with the eject feedshift guide and causes a paper jam)	The image drive PWB is faulty.	Replacing the image drive PWB	
16	Replacing the engine PWB (when the paper collides with the eject feedshift guide and causes a paper jam)	The engine PWB is faulty.	Replace the engine PWB.	

J4301/J4302/J4303/J4304/J4305/J4309: DU sensor 1 non-arrival jam

DU sensor 1 does not turn on after duplex reverse operation when feeding from cassettes 1 to 5 or the multi bypass tray.

Step	Check description	Assumed cause	Measures	Reference
1	Checking the paper	foreign objects are on the paper.	Remove the paper with foreign objects.	
2	Checking the paper	The paper leading edge is bent.	Remove the bent paper.	
3	Checking the paper	The paper is wavy.	Correct or replace paper. If it is difficult to replace,switch the leading edge and the trailing edge of paper,or flip paper upside down and reset them.	
4	Check the conveying path (when the paper is folded in front of the DU conveying roller)	Paper is caught at the conveying guide,piece of paper,etc..	If a piece of paper or the foreign objects adhere on the conveying path,or a burr in the parts such as the conveying surface of the conveying guide or the actuator,remove or replace them. If the sheet or film has a damage,deformation,floating,repair or replace them.	
5	Paper replacement (when the paper is folded in front of the DU conveying roller)	The paper curls.	Replace with paper with a different eye direction.	
6	Replacing the paper and installing the cassette heater (when the paper is folded in front of the DU conveying roller)	Paper stiffness is weakening due to moisture absorption.	Perform printing on the paper immediately after opening and check if there is any difference in the phenomenon. If there is no problem with the paper immediately after opening,replace the paper. Also,consider installing a cassette heater.	
7	Change settings (when the paper is folded in front of the DU conveying roller)	The actual paper and the paper settings (media type,paper size) do not match.	Set the proper media type via the System Menu.	
8	Checking the paper conveying parts	Guides etc. are not installed properly. Or there is dirt,deformation,or wear.	Clean,correct,and reinstall conveying parts such as guides. If it is not repaired, replace it.	
9	Checking the paper (when the paper is being transported diagonally)	Unspecified papers are used.	Explain to the user to use the paper within the specifications.	
10	Check the reversing guide roller (when the paper is being transported diagonally)	Pressure of the reverse guide pulley is not enough.	Reattach the reverse guide pulley. If the pressing parts are deformed or damaged,replace them.	
11	Checking the DU transport roller (when the paper is being transported at an angle)	Conveying capability of the DU conveying roller is not enough.	Clean the DU conveying roller. If the surface is worn out,replace it.	
12	Checking the DU transport roller (when the paper is being transported diagonally)	Pressure of the DU conveying pulley is not enough.	Reinstall the rollers on the DU conveying. If the pressing part is deformed or damaged,replace it.	
13	Checking the connection	The connector is not connected properly,or the wire is faulty.	Clean the terminals of the wire connector below and reinsert them. If there is no continuity, replace the wire. • DU sensor 1 - Feed drive PWB • DU clutch 1 - Feed drive PWB • Feeding motor - Feed drive PWB • Feed drive PWB - Engine PWB	
14	Checking the connection (when abnormal images due to poor FFC connection also occur at the same time)	FFC is not connected properly. Or it is faulty.	Clean the FFC below and reconnect. If the FFC terminal is deformed or the FFC is broken,replace the FFC. • Engine PWB - Main PWB	

Step	Check description	Assumed cause	Measures	Reference
15	Checking DU sensor 1	The DU sensor 1 does not operate correctly.	Execute U031 [DU1]. If DU sensor 1 does not operate properly,clean and reattach it then reconnect the connector. If not repaired, replace it.	
16	Checking drive parts (when paper is jammed on the DU conveying roller)	The DU conveying roller does not rotate as the drive parts are faulty.	Repair the drive parts between the paper feed motor and the DU conveying upper roller. If it does not operate properly due to damage,etc.,replace it.	
17	Checking DU clutch 1 (when paper is jammed on the DU conveying roller)	The DU conveying roller does not rotate as DU clutch does not operate correctly.	Execute U032 [DU1]. If DU clutch 1 does not operate correctly,reattach it and reconnect the connector. If not repaired, replace it.	
18	Replacing the feed drive PWB	The feed drive PWB is faulty.	Replace the feed drive PWB.	
19	Replacing the engine PWB	The engine PWB is faulty.	Replace the engine PWB.	

J4311/J4312/J4313/J4314/J4315/J4319: DU sensor 1 stay jam

DU sensor 1 does not turn off after duplex reverse operation when feeding from cassettes 1 to 5 or the multi bypass tray.

Step	Check description	Assumed cause	Measures	Reference
1	Checking the paper conveying parts	The roller,the guide,etc. is not attached properly. Or,they are dirty,deformed,worn out.	Clean ,repair and reattach the conveying parts such as the roller,guide,etc. If not repaired, replace it.	
2	Checking the drive parts	The DU conveying roller does not rotate correctly as the drive parts are faulty.	Repair the drive parts between the paper feed motor and the DU conveying upper roller. If it does not operate properly due to damage,etc.,replace it.	
3	Checking the connection	The connector is not connected properly,or the wire is faulty.	Clean the terminal of the following wire connectors and reconnect the connectors. If there is no continuity, replace the wire. • DU sensor 1 - Feed drive PWB • DU clutch 1 - Feed drive PWB • Feed drive PWB - Engine PWB	
4	Checking the DU sensor	DU sensor does not operate correctly.	Execute U031 [DU1]. If DU sensor 1 does not operate properly,clean and reattach it then reconnect the connector. If not repaired, replace it.	
5	Checking the DU clutch	DU clutch does not operate correctly.	Execute U032 [DU1]. If DU clutch 1 does not operate correctly,reattach it and reconnect the connector. If not repaired, replace it.	
6	Replacing the feed drive PWB	The feed drive PWB is faulty.	Replace the feed drive PWB.	
7	Replacing the engine PWB	The engine PWB is faulty.	Replace the engine PWB.	

J4401/J4402/J4403/J4404/J4405/J4409: DU sensor 2 non-arrival jam

When feeding from cassettes 1 to 5 or the multi bypass tray, the DU sensor 2 does not turn on even after a specified time has passed after the DU sensor 1 was turned on.

Step	Check description	Assumed cause	Measures	Reference
1	Checking the paper	foreign objects are on the paper.	Remove the paper with foreign objects.	
2	Checking the paper	The paper leading edge is bent.	Remove the bent paper.	
3	Checking the paper	The paper is wavy.	Correct or replace paper. If it is difficult to replace,switch the leading edge and the trailing edge of paper,or flip paper upside down and reset them.	
4	Checking the paper (when the paper is being transported diagonally)	Unspecified papers are used.	Explain to the user to use the paper within the specifications.	
5	Change settings (when the paper is folded in front of the DU conveying roller)	The actual paper and the paper settings (media type,paper size) do not match.	Set the proper media type via the System Menu.	
6	Paper replacement (when the paper is folded in front of the DU conveying roller)	The paper curls.	Replace with paper with a different eye direction.	
7	Replacing the paper and installing the cassette heater (when the paper is folded in front of the DU conveying roller)	Paper stiffness is weakening due to moisture absorption.	Perform printing on the paper immediately after opening and check if there is any difference in the phenomenon. If there is no problem with the paper immediately after opening,replace the paper. Also,consider installing a cassette heater.	
8	Check the conveying path (when the paper is folded in front of the DU conveying roller)	Paper is caught at the conveying guide,piece of paper,etc..	If a piece of paper or the foreign objects adhere on the conveying path,or a burr in the parts such as the conveying surface of the conveying guide or the actuator,remove or replace them. If the sheet or film has a damage,deformation,floating,repair or replace them.	
9	Check the reversing guide roller (when the paper is being transported diagonally)	Pressure of the reverse guide pulley is not enough.	Reattach the reverse guide pulley. If the pressing parts are deformed or damaged,replace them.	
10	Checking the DU transport roller (when the paper is being transported at an angle)	Conveying capability of the DU conveying roller is not enough.	Clean the DU conveying middle roller and the DU conveying lower roller. If the surface is worn out,replace it.	
11	Checking the DU transport roller (when the paper is being transported diagonally)	Pressure of the DU conveying pulley is not enough.	Reinstall the DU conveying middle roller and the DU conveying lower pulley. If the pressing parts are deformed or damaged,replace them.	
12	Checking the paper conveying parts	Guides etc. are not installed properly. Or there is dirt,deformation,or wear.	Clean,correct,and reinstall conveying parts such as guides. If it is not repaired, replace it.	
13	Checking the connection	The connector is not connected properly,or the wire is faulty.	Clean the terminals of the wire connector below and reinsert them. If there is no continuity, replace the wire. • Conveying unit (DU sensor 2) - Feed drive PWB • Conveying unit (DU sensor 2) - Feed drive PWB • Feed motor - Feed drive PWB • Feed drive PWB - Engine PWB	

Step	Check description	Assumed cause	Measures	Reference
14	Checking the connection (when abnormal images due to poor FFC connection also occur at the same time)	FFC is not connected properly. Or it is faulty.	Clean the FFC below and reconnect. If the FFC terminal is deformed or the FFC is broken,replace the FFC. • Engine PWB - Main PWB	
15	Checking the DU sensor 2	DU sensor 2 is not working properly.	Execute U031 [DU2]. If DU sensor 2 does not operate properly,clean and reattach it then reconnect the connector. If not repaired, replace it.	
16	Checking drive parts (when paper is jammed on the DU conveying roller)	The DU conveying roller does not rotate as the drive parts are faulty.	Repair the drive parts between the paper feed motor and the DU conveying middle roller/DU conveying lower roller. If it does not operate properly due to damage,etc.,replace it.	
17	Checking the DU clutch (when the paper is jammed on the DU conveying roller)	The DU conveying roller does not rotate as DU clutch does not operate correctly.	Execute U032 [DU2]. If DU clutch 2 does not operate correctly,reattach it and reconnect the connector. If not repaired, replace it.	
18	Replacing the feed drive PWB	The feed drive PWB is faulty.	Replace the feed drive PWB.	
19	Replacing the engine PWB	The engine PWB is faulty.	Replace the engine PWB.	
20	Replacement of main PWB (when abnormal images occur at the same time)	The main PWB is faulty.	Replace the main PWB.	

J4701/J4702/J4703/J4704/J4705/J4709: Exit reverse sensor non-arrival jam

The eject reversal sensor does not turn on when feeding from cassettes 1 to 5 or the multi bypass tray.

Step	Check description	Assumed cause	Measures	Reference
1	Checking the paper	Unspecified papers are used.	Explain to the user to use the paper within the specifications.	
2	Checking the paper	foreign objects are on the paper.	Remove the paper with foreign objects.	
3	Checking the paper	The paper leading edge is bent.	Remove the bent paper.	
4	Checking the paper	The paper is wavy.	Correct or replace paper. If it is difficult to replace,switch the leading edge and the trailing edge of paper,or flip paper upside down and reset them.	
5	Change settings (if there is a paper jam in the middle of the eject feedshift guide)	The actual paper and the paper settings (media type,paper size) do not match.	Set the proper media type via the System Menu.	
6	Paper replacement (if there is a paper jam in the middle of the eject feedshift guide)	The paper curls.	Replace with paper with a different eye direction.	
7	Replacing the paper and installing the cassette heater (when the paper is jammed in the middle of the eject feedshift guide)	Paper stiffness is weakening due to moisture absorption.	Perform printing on the paper immediately after opening and check if there is any difference in the phenomenon. If there is no problem with the paper immediately after opening,replace the paper. Also,consider installing a cassette heater.	
8	Check the transport path (when the paper is being transported diagonally)	The paper is caught with a piece of paper,etc.	If a piece of paper,the foreign objects are on the conveying path,or a burr in the parts such as the guide or the actuator,remove them.	
9	Check actuators and springs (when paper is being transported at an angle)	The actuator does not operate properly.	Reattach the actuator and spring of the exit reverse sensor. If they do not operate correctly due to the deformation,etc.,repair or replace them.	
10	Checking the transport guide (when the paper is being transported diagonally)	The paper is caught with the conveying guide.	Reattach the conveying guide. If a burr in the conveying surface of the conveying guide,remove or replace it.	
11	Checking the eject feedshift guide (when the paper collides with the eject feedshift guide and the paper is jammed)	The eject feedshift guide is not installed properly,or foreign objects such as toner is attached.	Clean the eject feedshift guide and reinstall it. If foreign objects is stuck to the eject feedshift guide,replace the eject feedshift guide.	
12	Checking the roller drive parts on eject	The exit upper roller does not rotate.	If the drive gear of the eject roller is deformed or the bearing is scraped,replace it.	
13	Check the eject unit	The eject unit connector is not properly connected,and the eject-related electrical components are not operating properly.	Reconnect the connector of the exit unit.	
14	Checking the connection	The connector is not connected properly,or the wire is faulty.	Clean the terminals of the wire connector below and reinsert them. If there is no continuity, replace the wire. • Eject reversing sensor - Front drive PWB • Eject upper solenoid/Eject lower solenoid - Front drive PWB • Eject reversing motor - Front drive PWB • Image drive PWB - Engine PWB	

Step	Check description	Assumed cause	Measures	Reference
15	Checking the exit reverse sensor	The exit reverse sensor does not operate properly.	Execute U031 [Exit Paper]. If the exit reverse sensor does not operate properly,clean and reattach it then reconnect the connector. If not repaired, replace it.	
16	Checking the exit solenoid	The exit solenoid does not operate correctly.	Execute U033 [Branch Eject Up] or [Branch Eject Down] to check the exit feed-shift guide operation. If it does not operate correctly,reattach the exit upper solenoid or the exit lower solenoid and reconnect the connector. If not repaired, replace it.	
17	Checking the exit reverse motor	The exit reverse motor does not operate properly.	Execute U030 [SB (CW)] or [SB (CCW)]. If the eject reversing motor does not work properly,reinstall it and reconnect the connector. If it is not repaired, replace it.	
18	Replacing the front drive PWB	The front drive PWB is faulty.	Replacing the front drive PWB	
19	Replacing the image drive PWB	The image drive PWB is faulty.	Replacing the image drive PWB	
20	Replacing the engine PWB	The engine PWB is faulty.	Replace the engine PWB.	

J4711/J4712/J4713/J4714/J4715/J4719: Exit reverse sensor stay jam

The eject reversal sensor does not turn off when feeding from cassettes 1 to 5 or the multi bypass tray.

Step	Check description	Assumed cause	Measures	Reference
1	Check the transport path (when the paper is being transported diagonally)	The paper is caught with a piece of paper,etc.	If a piece of paper,the foreign objects are on the conveying path,or a burr in the parts such as the guide or the actuator,remove them.	
2	Check actuators and springs (when paper is being transported at an angle)	The actuator does not operate properly.	Reattach the actuator and spring of the exit reverse sensor. If they do not operate correctly due to the deformation,etc.,repair or replace them.	
3	Checking the transport guide (when the paper is being transported diagonally)	The paper is caught with the conveying guide.	Reattach the conveying guide. If a burr in the conveying surface of the conveying guide,remove or replace it.	
4	Checking the exit feed-shift guide	Toner or etc. adheres to the exit feed-shift guide.	Clean the eject feedshift guide. If foreign objects is stuck to the eject feedshift guide,replace the eject feedshift guide.	
5	Checking the roller drive parts on eject	The exit upper roller does not rotate.	If the drive gear of the eject roller is deformed or the bearing is scraped,replace it.	
6	Check the eject unit	The eject unit connector is not properly connected,and the eject-related electrical components are not operating properly.	Reconnect the connector of the exit unit.	
7	Checking the connection	The connector is not connected properly,or the wire is faulty.	Clean the terminals of the wire connector below and reinsert them. If there is no continuity, replace the wire. • Eject reversing sensor - Front drive PWB • Eject upper solenoid/Eject lower solenoid - Front drive PWB • Eject reversing motor - Front drive PWB • Image drive PWB - Engine PWB	
8	Checking the exit reverse sensor	The exit reverse sensor does not operate properly.	Execute U031 [Exit Paper]. If the exit reverse sensor does not operate properly,clean and reattach it then reconnect the connector. If not repaired, replace it.	
9	Checking the exit solenoid	The exit solenoid does not operate correctly.	Execute U033 [Branch Eject Up] or [Branch Eject Down] to check the exit feed-shift guide operation. If it does not operate correctly,reattach the exit upper solenoid or the exit lower solenoid and reconnect the connector. If not repaired, replace it.	
10	Checking the exit reverse motor	The exit reverse motor does not operate properly.	Execute U030 [SB (CW)] or [SB (CCW)]. If the eject reversing motor does not work properly,reinstall it and reconnect the connector. If it is not repaired, replace it.	
11	Replacing the front drive PWB	The front drive PWB is faulty.	Replacing the front drive PWB	
12	Replacing the image drive PWB	The image drive PWB is faulty.	Replacing the image drive PWB	
13	Replacing the engine PWB	The engine PWB is faulty.	Replace the engine PWB.	

J4901/J4902/J4903/J4904/J4905/J4908/J4909: BR conveying sensor 1 non-arrival jam

BR conveying sensor 1 does not turn on when feeding from cassettes 1 to 5, both sides, or the multi bypass tray.

Step	Check description	Assumed cause	Measures	Reference
1	Check the transport path (when the paper is being transported diagonally)	The paper is caught with a piece of paper,etc.	If a piece of paper,the foreign objects are on the conveying path,or a burr in the parts such as the guide or the actuator,remove them.	
2	Check actuators and springs (when paper is being transported at an angle)	The actuator does not operate properly.	Reattach the actuator and spring of BR conveying sensor 1. If they do not operate correctly due to the deformation,etc.,repair or replace them.	
3	Checking the conveying guide	The paper is caught with the conveying guide.	Clean the conveying guide and reinstall it. If there are burrs on the conveying surface of the conveying guide,remove them. If it is not repaired, replace it.	
4	Checking the BR conveying roller	BR conveying roller is not rotating properly.	If the drive belt,pulley,bearing,etc. of the BR conveying roller is faulty,replace it.	
5	Reinstalling the bridge unit	The drawer connector between BR PWB and Image drive PWB is not connected properly.	Reinstall the relay conveying unit.	
6	Checking the connection	The connector is not connected properly,or the wire is faulty.	Clean the terminals of the wire connector below and reinsert them. If there is no continuity, replace the wire. • BR conveying sensor 1 - BR PWB • BR conveying motor 1 - BR PWB • BR PWB - Image drive PWB • Image drive PWB - Engine PWB	
7	Checking BR conveying sensor 1	The BR conveying sensor 1 does not operate correctly.	Execute U031 [Brg1 Feed]. If BR conveying sensor 1 does not operate properly,clean and reattach it then reconnect the connector. If not repaired, replace it.	
8	Checking the BR transfer motor 1	BR conveying motor 1 is not operating properly.	Execute U030 [Bridge1 (CW)] or [Bridge1 (CCW)]. If BR Conveying Motor 1 does not operate properly,reinstall it and reconnect the connector. If it is not repaired, replace it.	
9	Replacing the BR PWB	The BR PWB is faulty.	Replace the BR PWB.	
10	Replacing the image drive PWB	The image drive PWB is faulty.	Replacing the image drive PWB	
11	Replacing the engine PWB	The engine PWB is faulty.	Replace the engine PWB.	

J4911/J4912/J4913/J4914/J4915/J4918/J4919: BR conveying sensor 1 stay jam

BR conveying sensor 1 does not turn off when feeding from cassettes 1 to 5, both sides, or the multi bypass tray.

Step	Check description	Assumed cause	Measures	Reference
1	Check the transport path (when the paper is being transported diagonally)	The paper is caught with a piece of paper,etc.	If a piece of paper,the foreign objects are on the conveying path,or a burr in the parts such as the guide or the actuator,remove them.	
2	Check actuators and springs (when paper is being transported at an angle)	The actuator does not operate properly.	Reattach the actuator and spring of BR conveying sensor 1. If they do not operate correctly due to the deformation,etc.,repair or replace them.	
3	Checking the conveying guide	The paper is caught with the conveying guide.	Clean the conveying guide and reinstall it. If there are burrs on the conveying surface of the conveying guide,remove them. If it is not repaired, replace it.	
4	Checking the BR conveying roller	BR conveying roller is not rotating properly.	If the drive belt,pulley,bearing,etc. of the BR conveying roller is faulty,replace it.	
5	Reinstalling the bridge unit	The drawer connector between BR PWB and Image drive PWB is not connected properly.	Reinstall the relay conveying unit.	
6	Checking the connection	The connector is not connected properly,or the wire is faulty.	Clean the terminals of the wire connector below and reinsert them. If there is no continuity, replace the wire. • BR conveying sensor 1 - BR PWB • BR conveying motor 1 - BR PWB • BR PWB - Image drive PWB • Image drive PWB - Engine PWB	
7	Checking BR conveying sensor 1	The BR conveying sensor 1 does not operate correctly.	Execute U031 [Brg1 Feed]. If BR conveying sensor 1 does not operate properly,clean and reattach it then reconnect the connector. If not repaired, replace it.	
8	Checking the BR transfer motor 1	BR conveying motor 1 is not operating properly.	Execute U030 [Bridge1 (CW)] or [Bridge1 (CCW)]. If BR Conveying Motor 1 does not operate properly,reinstall it and reconnect the connector. If it is not repaired, replace it.	
9	Replacing the BR PWB	The BR PWB is faulty.	Replace the BR PWB.	
10	Replacing the image drive PWB	The image drive PWB is faulty.	Replacing the image drive PWB	
11	Replacing the engine PWB	The engine PWB is faulty.	Replace the engine PWB.	

J5001/J5002/J5003/J5004/J5005/J5008/J5009: BR conveying sensor 2 non-arrival jam

BR conveying sensor 2 does not turn on when feeding from cassettes 1 to 5, both sides, or the multi bypass tray.

Step	Check description	Assumed cause	Measures	Reference
1	Check the transport path (when the paper is being transported diagonally)	The paper is caught with a piece of paper,etc.	If a piece of paper,the foreign objects are on the conveying path,or a burr in the parts such as the guide or the actuator,remove them.	
2	Check actuators and springs (when paper is being transported at an angle)	The actuator does not operate properly.	Reattach the actuator and spring of BR conveying sensor 2. If they do not operate correctly due to the deformation,etc.,repair or replace them.	
3	Checking the conveying guide	The paper is caught with the conveying guide.	Clean the conveying guide and reinstall it. If there are burrs on the conveying surface of the conveying guide,remove them. If it is not repaired, replace it.	
4	Checking the BR conveying roller	BR conveying roller is not rotating properly.	If the drive belt,pulley,bearing,etc. of the BR conveying roller is faulty,replace it.	
5	Reinstalling the bridge unit	The drawer connector between BR PWB and Image drive PWB is not connected properly.	Reinstall the relay conveying unit.	
6	Checking the connection	The connector is not connected properly,or the wire is faulty.	Clean the terminals of the wire connector below and reinsert them. If there is no continuity, replace the wire. • BR conveying sensor 2 - BR PWB • BR conveying motor 2 - BR PWB • BR PWB - Image drive PWB • Image drive PWB - Engine PWB	
7	Checking BR conveying sensor 2	The BR conveying sensor 2 does not operate correctly.	Execute U031 [Brg2 Feed]. If BR conveying sensor 2 does not operate properly,clean and reattach it then reconnect the connector. If not repaired, replace it.	
8	Checking the BR transfer motor 2	BR conveying motor 2 is not operating properly.	Execute U030 [Bridge2 (CW)] or [Bridge2 (CCW)]. If BR Conveying Motor 2 does not operate properly,reinstall it and reconnect the connector. If it is not repaired, replace it.	
9	Replacing the BR PWB	The BR PWB is faulty.	Replace the BR PWB.	
10	Replacing the image drive PWB	The image drive PWB is faulty.	Replacing the image drive PWB	
11	Replacing the engine PWB	The engine PWB is faulty.	Replace the engine PWB.	

J5011/J5012/J5013/J5014/J5015/J5018/J5019: BR conveying sensor 2 stay jam

BR conveying sensor 2 does not turn off when feeding from cassettes 1 to 5, both sides, or the multi bypass tray.

Step	Check description	Assumed cause	Measures	Reference
1	Check the transport path (when the paper is being transported diagonally)	The paper is caught with a piece of paper,etc.	If a piece of paper,the foreign objects are on the conveying path,or a burr in the parts such as the guide or the actuator,remove them.	
2	Check actuators and springs (when paper is being transported at an angle)	The actuator does not operate properly.	Reattach the actuator and spring of BR conveying sensor 2. If they do not operate correctly due to the deformation,etc.,repair or replace them.	
3	Checking the conveying guide	The paper is caught with the conveying guide.	Clean the conveying guide and reinstall it. If there are burrs on the conveying surface of the conveying guide,remove them. If it is not repaired, replace it.	
4	Checking the BR conveying roller	BR conveying roller is not rotating properly.	If the drive belt,pulley,bearing,etc. of the BR conveying roller is faulty,replace it.	
5	Reinstalling the bridge unit	The drawer connector between BR PWB and Image drive PWB is not connected properly.	Reinstall the relay conveying unit.	
6	Checking the connection	The connector is not connected properly,or the wire is faulty.	Clean the terminals of the wire connector below and reinsert them. If there is no continuity, replace the wire. • BR conveying sensor 2 - BR PWB • BR conveying motor 2 - BR PWB • BR PWB - Image drive PWB • Image drive PWB - Engine PWB	
7	Checking BR conveying sensor 2	The BR conveying sensor 2 does not operate correctly.	Execute U031 [Brg2 Feed]. If BR conveying sensor 2 does not operate properly,clean and reattach it then reconnect the connector. If not repaired, replace it.	
8	Checking the BR transfer motor 2	BR conveying motor 2 is not operating properly.	Execute U030 [Bridge2 (CW)] or [Bridge2 (CCW)]. If BR Conveying Motor 2 does not operate properly,reinstall it and reconnect the connector. If it is not repaired, replace it.	
9	Replacing the BR PWB	The BR PWB is faulty.	Replace the BR PWB.	
10	Replacing the image drive PWB	The image drive PWB is faulty.	Replacing the image drive PWB	
11	Replacing the engine PWB	The engine PWB is faulty.	Replace the engine PWB.	

J6000/J6001/J6002: DF paper entry failure jam

It was detected that the DF carry-in sensor was turned on before it was output from the Main unit.
Target: J6000 (4,000 sheets finisher,100 sheets staple finisher), J6001 (1,000 sheets finisher),J6002 (inner finisher)

Step	Check description	Assumed cause	Measures	Reference
1	Checking the paper path	The paper is caught with a piece of paper,etc.	If a piece of paper,the foreign objects are on the conveying path,or a burr in the parts such as the guide or the actuator,remove them.	
2	Checking the connection	The connector is not connected properly,or the wire is faulty.	Clean the terminal of the following wire connectors and reconnect the connectors. If there is no continuity, replace the wire. • DF entry sensor - DF PWB	
3	Checking the DF paper entry sensor	The DF entry sensor does not operate correctly.	Execute U241 [Finisher] > [HP]. If the DF entry sensor does not operate properly,clean and reattach it,then reconnect the connector. If not repaired, replace it.	
4	Replacing the DF PWB	The DF PWB is faulty.	Replace the DF PWB.	

J6012: Inner DF open jam

The opening of the inner finisher was detected during DF operation.

Step	Check description	Assumed cause	Measures	Reference
1	Checking the DF connection sensor	The DF connection sensor does not operate properly.	Execute U241 [Finisher] > [Release]. If the DF connection sensor does not operate properly,reattach it and reconnect the connector. If not repaired, replace it.	

J6020/J6021: DF front cover open jam

The opening of the DF front cover was detected during DF operation.
Target: J6020 (4,000 sheets finisher,100 sheets staple finisher), J6021 (1,000 sheets finisher)

Step	Check description	Assumed cause	Measures	Reference
1	Checking the DF front cover	The DF front cover is not aligned to the other exterior covers.	Check if the DF front cover closes firmly and reattach the DF front cover if necessary. If the DF front cover is deformed,repair or replace it.	
2	Checking the DF front cover switch	The DF front cover switch does not operate properly.	Execute U241 [Finisher] > [Front Cover]. If the DF front cover switch does not operate properly,reattach it and reconnect the connector. If not repaired, replace it.	

J6030: DF staple jam

The home position cannot be detected even after a specified time has passed since the DF staple motor was started. (100-sheet staple finisher)

Step	Check description	Assumed cause	Measures	Reference
1	Checking the staple	Check if the upper BF registration guide shifts manually,and reattach it if it does not smoothly shift.	Check if the lower BF registration guide shifts manually,and reattach it if it does not smoothly shift.	
2	Checking the drive parts	The DF staple motor does not rotate due to the excessive load.	Check if the DF staple motor rotates manually. Replace the DF staple unit if it does not rotate smoothly due to the damaged gear,etc.	
3	Checking the connection	The connector is not connected properly,or the wire is faulty.	Clean the terminal of the following wire connectors and reconnect the connectors. If there is no continuity, replace the wire. • DF staple unit - DF staple relay PWB • DF staple relay PWB - DF PWB	
4	Replacing the DF staple unit	The DF staple unit is faulty.	Replace the DF staple unit.	
5	Replacing the DF staple relay PWB	The DF staple relay PWB is faulty.	Replace the DF staple relay PWB.	
6	Replacing the DF PWB	The DF PWB is faulty.	Replace the DF PWB.	

J6040: Folding staple JAM

-The home position cannot be detected even after a specified time has passed since the BF staple motor was started. While the BF staple motor is operating, the lock detection signal is continuously 1V or more for a specified time (100-sheet staple finisher)

Step	Check description	Assumed cause	Measures	Reference
1	Checking the staple	Check if the upper BF registration guide shifts manually,and reattach it if it does not smoothly shift.	Check if the lower BF registration guide shifts manually,and reattach it if it does not smoothly shift.	
2	Checking the BF staple unit	The BF staple motor does not rotate due to the excessive load.	Check if the BF staple motor rotates manually. Replace the BF staple unit if it does not rotate smoothly due to the damaged gear,etc.	
3	Checking the connection	The connector is not connected properly,or the wire is faulty.	Clean the terminal of the following wire connectors and reconnect the connectors. If there is no continuity, replace the wire. • BF staple unit (BF staple motor) - BF PWB • BF PWB - DF PWB	
4	Replacing the BF staple unit	The BF staple unit is faulty.	Replace the BF staple unit.	
5	Replacing the BF PWB	The BF PWB is faulty.	Replace the BF PWB.	
6	Replacing the DF PWB	The DF PWB is faulty.	Replace the DF PWB.	

J6041: DF top cover open jam

The opening of the DF top cover was detected while the 1,000-sheet finisher was operating.

Step	Check description	Assumed cause	Measures	Reference
1	Checking the DF top cover	The DF top cover is not aligned to the other exterior covers.	Check if the DF top cover is closed firmly and reattach the DF top cover if necessary. If the DF top cover is deformed,repair or replace it.	
2	Checking the DF top cover switch	The DF top cover switch does not operate correctly.	Execute U241 [Finisher] > [Top Cover]. If the DF top cover switch does not operate properly,reattach it and reconnect the connector. If not repaired, replace it.	

J6050: BF tray open jam

The opening of the BF tray was detected during the folding operation. (4,000 sheets finisher / 100 sheets staple finisher)

Step	Check description	Assumed cause	Measures	Reference
1	Checking the BF tray	The BF tray does not operate properly.	Check if the BF tray closes firmly,and reattach the BF tray if necessary. If the BF tray is deformed,repair or replace it.	
2	Checking the BF tray sensor	The BF tray sensor does not operate correctly.	Execute U241 [Booklet] > [Tray]. If the BF tray sensor does not operate properly,reattach it and reconnect the connector. If not repaired, replace it.	

J6060: MT cover open jam

The opening of the MT cover was detected while passing the paper to the mailbox. (4,000 sheets finisher)

Step	Check description	Assumed cause	Measures	Reference
1	Checking the MT cover	The MT cover is not aligned with the other exterior covers.	Check if the MT cover is securely closed,and reattach it if necessary. Repair or replace it if it is deformed.	
2	Checking the MT cover switch	The MT cover switch does not operate properly.	Execute U241 [Mail Box] > [Cover]. If the MT cover switch does not operate properly,reattach it and reconnect the connector. If not repaired, replace it.	

J6070: Folding unit open JAM

The opening of the folding unit was detected during the folding operation. (4,000 sheets finisher / 100 sheets staple finisher)

Step	Check description	Assumed cause	Measures	Reference
1	Checking the BF set switch	The BF set switch does not operate correctly.	Execute U241 [Booklet] > [Set]. If the BF set switch does not operate properly,reattach it and reconnect the connector. If not repaired, replace it.	

J6080: BF left cover open jam

The opening of the BF left cover was detected during the folding operation. (4,000 sheets finisher)

Step	Check description	Assumed cause	Measures	Reference
1	Checking the BF left cover	The BF left cover is not aligned with the other exterior covers.	Check if the BF left cover turns on the BF left cover switch firmly. If the BF left cover is deformed,repair or replace it.	
2	Checking the BF left cover switch	The BF left cover switch does not operate correctly.	Execute U241 [Booklet] > [Left Guide]. If the BF left cover switch does not operate properly,reattach it and reconnect the connector. If not repaired, replace it.	

J6100/J6101/J6102: DF paper entry sensor non-arrival jam

J6100 (4,000 sheets finisher / 100 sheets staple finisher) / J6101 (1,000 sheets finisher): The DF carry-in sensor does not turn on even after a specified time has passed after receiving the main unit eject command.
J6102 (inner finisher): The DF carry-in sensor or PH carry-in sensor does not turn on even after a specified time has passed after receiving the main unit ejection command.

Step	Check description	Assumed cause	Measures	Reference
1	Checking the paper conveying parts	The roller,the guide,etc. is not attached properly. Or,they are dirty,deformed,worn out.	Clean ,repair and reattach the conveying parts such as the roller,guide,etc. If not repaired, replace it.	
2	Checking the connection	The connector is not connected properly,or the wire is faulty.	Clean the terminal of the following wire connectors and reconnect the connectors. If there is no continuity, replace the wire. • DF entry sensor - DF PWB • DF entry motor - DF PWB	
3	Checking the connection (inner finisher)	The connector is not connected properly,or the wire is faulty.	Clean the terminals of the wire connector below and reinsert them. If there is no continuity, replace the wire. • PH carry-in sensor-PH PWB • PH PWB-DF PWB	
4	Checking the DF paper entry sensor	The DF entry sensor does not operate correctly.	Execute U241 [Punch] > [HP]. If the DF carry-in sensor does not work properly,reinstall it and reconnect the connector. If it is not repaired, replace it.	
5	Checking the DF paper entry motor	The DF entry motor does not operate correctly.	Execute U240 [Motor] > [Feed In (H)] or [Feed In (L)]. If the DF carry-in motor does not work properly,reinstall it and reconnect the connector. If it is not repaired, replace it.	
6	Checking the PH carry-in sensor (inner finisher)	The PH carry-in sensor is not operating properly.	Execute U241 [Punch] > [HP]. If the PH carry-in sensor does not work properly,reinstall it and reconnect the connector. If it is not repaired, replace it.	
7	PH PWB replacement (inner finisher)	The PH PWB is faulty.	Replace the PH PWB.	
8	Replacing the DF PWB	The DF PWB is faulty.	Replace the DF PWB.	

J6110/J6111/J6112: DF paper entry sensor stay jam

J6110 (4,000 sheets finisher / 100 sheets staple finisher) / J6111 (1,000 sheets finisher): The DF carry-in sensor does not turn off even after a specified time has passed after the DF carry-in sensor is turned on.
J6112 (inner finisher): After the DF carry-in sensor is turned on, the DF carry-in sensor does not turn off even after a specified time has passed. Or, the PH carry-in sensor does not turn off even after a specified time has passed after the PH carry-in sensor is turned on.

Step	Check description	Assumed cause	Measures	Reference
1	Checking the paper conveying parts	Rollers,guides,etc. are not installed properly. Or there is dirt,deformation,or wear.	Clean ,repair and reattach the conveying parts such as the roller, guide,etc. If not repaired, replace it.	
2	Checking the connection	The connector is not connected properly,or the wire is faulty.	Clean the terminal of the following wire connectors and reconnect the connectors. If there is no continuity, replace the wire. • DF entry sensor - DF PWB • DF entry motor - DF PWB	
3	Checking the connection (inner finisher)	The connector is not connected properly,or the wire is faulty.	Clean the terminals of the wire connector below and reinsert them. If there is no continuity, replace the wire. • PH carry-in sensor-PH PWB • PH PWB-DF PWB	
4	Checking the DF paper entry sensor	The DF entry sensor does not operate correctly.	Execute U241 [Finisher] > [HP]. If the DF entry sensor does not operate properly,reattach it and reconnect the connector. If not repaired, replace it.	
5	Checking the DF paper entry motor	The DF entry motor does not operate correctly.	Execute U240 [Motor] > [Feed In (H)] or [Feed In (L)]. If the DF carry-in motor does not work properly,reinstall it and reconnect the connector. If it is not repaired, replace it.	
6	Checking the PH carry-in sensor (inner finisher)	The PH carry-in sensor is not operating properly.	Execute U241 [Punch] > [HP]. If the PH carry-in sensor does not work properly,reinstall it and reconnect the connector. If it is not repaired, replace it.	
7	PH PWB replacement (inner finisher)	The PH PWB is faulty.	Replace the PH PWB.	
8	Replacing the DF PWB	The DF PWB is faulty.	Replace the DF PWB.	

J6200: DF sub eject sensor non-arrival JAM/DF entry timing sensor non-arrival JAM

After the DF carry-in sensor is turned on, the DF sub eject sensor does not turn on even after a specified time has passed. (4,000 sheets finisher)
After the DF carry-in sensor is turned on, the DF carry-in timing sensor does not turn on even after a specified time has passed. (100-sheet staple finisher)

Step	Check description	Assumed cause	Measures	Reference
1	Checking the length of the paper (when printing the banner)	The custom size paper of 470.1mm (18.5inch) or more length is fed.	Set the following at the printer driver properties. Media Type: Plain Source: MP tray	
2	Checking the paper conveying parts	Rollers,guides,etc. are not installed properly. Or there is dirt,deformation,or wear.	Clean ,repair and reattach the conveying parts such as the roller,guide,etc. If not repaired, replace it.	
3	Checking the connection	The connector is not connected properly,or the wire is faulty.	Clean the terminals of the wire connector below and reinsert them. If there is no continuity, replace the wire. • DF sub-eject sensor - DF PWB (4,000 sheets finisher) • DF carry-in timing sensor - DF PWB (100 sheets binding staple finisher) • DF feedshift solenoid 3 - DF PWB • DF Carry-in motor - DF PWB • DF eject motor - DF PWB	
4	Checking the DF sub-eject sensor (4,000 sheets finisher)	The DF sub exit sensor does not operate correctly.	Execute U241 [Finisher] > [Sub Tray Eject]. If the DF sub exit sensor does not operate properly,reattach it and reconnect the connector. If not repaired, replace it.	
5	Checking the DF carry-in timing sensor (100-sheet staple finisher)	The DP entrance timing sensor does not operate properly.	Execute U241 [Finisher] > [Feed In Timing]. If the DF carry-in timing sensor does not operate properly,reinstall it and reconnect the connector. If it is not repaired, replace it.	
6	Checking DF feed-shift solenoid 3	The DF feed-shift solenoid 3 does not operate correctly.	Execute U240 [Solenoid] > [Booklet]. If DF feed-shift solenoid 3 does not operate properly,reattach it and reconnect the connector. If not repaired, replace it.	
7	Checking the DF paper entry motor	The DF entry motor does not operate correctly.	Execute U240 [Motor] > [Feed In (H)] or [Feed In (L)]. If the DF carry-in motor does not work properly,reinstall it and reconnect the connector. If it is not repaired, replace it.	
8	Checking the DF exit motor	The DF exit motor does not operate correctly.	Execute U240 [Motor] > [Eject (H)] or [Eject (L)]. If the DF exhaust motor does not work properly,reinstall it and reconnect the connector. If it is not repaired, replace it.	
9	Replacing the DF PWB	The DF PWB is faulty.	Replace the DF PWB.	

J6210: DF sub eject sensor stay JAM/DF entry timing sensor stay JAM

After the DF sub-eject sensor is turned on, the DF sub-eject sensor does not turn off even after a specified time has passed. (4,000 sheets finisher)
After the DF carry-in timing sensor is turned off, the sub eject sensor does not turn off even after a specified time has passed.

Step	Check description	Assumed cause	Measures	Reference
1	Checking the paper conveying parts	Rollers,guides,etc. are not installed properly. Or there is dirt,deformation,or wear.	Clean ,repair and reattach the conveying parts such as the roller,guide,etc. If not repaired, replace it.	
2	Checking the connection	The connector is not connected properly,or the wire is faulty.	Clean the terminals of the wire connector below and reinsert them. If there is no continuity, replace the wire. • DF sub-eject sensor - DF PWB (4,000 sheets finisher) • DF carry-in timing sensor - DF PWB (100 sheets binding staple finisher) • DF feedshift solenoid 3 - DF PWB • DF Carry-in motor - DF PWB • DF eject motor - DF PWB	
3	Checking the DF sub-eject sensor (4,000 sheets finisher)	The DF sub exit sensor does not operate correctly.	Execute U241 [Finisher] > [Sub Tray Eject]. If the DF sub exit sensor does not operate properly,reattach it and reconnect the connector. If not repaired, replace it.	
4	Checking the DF carry-in timing sensor (100-sheet staple finisher)	The DP entrance timing sensor does not operate properly.	Execute U241 [Finisher] > [Feed In Timing]. If the DF carry-in timing sensor does not operate properly,reinstall it and reconnect the connector. If it is not repaired, replace it.	
5	Checking DF feed-shift solenoid 3	The DF feed-shift solenoid 3 does not operate correctly.	Execute U240 [Solenoid] > [Booklet]. If DF feed-shift solenoid 3 does not operate properly,reattach it and reconnect the connector. If not repaired, replace it.	
6	Checking the DF paper entry motor	The DF entry motor does not operate correctly.	Execute U240 [Motor] > [Feed In (H)] or [Feed In (L)]. If the DF carry-in motor does not work properly,reinstall it and reconnect the connector. If it is not repaired, replace it.	
7	Checking the DF exit motor	The DF exit motor does not operate correctly.	Execute U240 [Motor] > [Eject (H)] or [Eject (L)]. If the DF exhaust motor does not work properly,reinstall it and reconnect the connector. If it is not repaired, replace it.	
8	Checking the DF PWB	The DF PWB is faulty.	Replace the DF PWB.	

J6300/J6301: DF middle sensor non-arrival JAM/DF sub eject sensor non-arrival JAM after the DF carry-in sensor is turned on, the DF middle sensor does not turn on even after a specified time has passed. (4,000 sheets finisher / 1,000 sheets finisher)

After the DF carry-in timing sensor is turned on, the DF sub eject sensor does not turn on even after a specified time has passed. (100-sheet staple finisher)
Target: J6300 (4,000-sheet finisher / 100-sheet staple finisher), J6301 (1,000-sheet finisher)

Step	Check description	Assumed cause	Measures	Reference
1	Checking the mechanical factor	Rollers,guides,etc. are not installed properly. Or there is dirt,deformation,or wear.	Perform the prior standard check items.	
2	Checking the connection	The connector is not connected properly,or the wire is faulty.	Clean the terminals of the wire connector below and reinsert them. If there is no continuity, replace the wire. • DF middle sensor - DF PWB (4,000 sheets finisher / 1,000 sheets finisher) • DF sub eject sensor - DF PWB (100-sheet staple finisher) • DF feedshift solenoid 3 - DF PWB • DF carry-in motor - DF PWB • DF middle motor - DF PWB	
3	Checking the DF middle sensor (4,000 sheets finisher / 1,000 sheets finisher)	The DF middle sensor does not operate correctly.	Execute U241 [Finisher] > [Middle Tray Eject]. If the DF middle sensor does not operate properly,reattach it and reconnect the connector. If not repaired, replace it.	
4	Checking the DF sub eject sensor (100-sheet staple finisher)	The DF sub exit sensor does not operate correctly.	Execute U241 [Finisher] > [Sub Tray Eject]. If the DF sub exit sensor does not operate properly,reattach it and reconnect the connector. If not repaired, replace it.	
5	Checking DF feed-shift solenoid 3	The DF feed-shift solenoid 3 does not operate correctly.	Execute U240 [Solenoid] > [Booklet]. If DF feed-shift solenoid 3 does not operate properly,reattach it and reconnect the connector. If not repaired, replace it.	
6	Checking the DF paper entry motor	The DF entry motor does not operate correctly.	Execute U240 [Motor] > [Feed In (H)] or [Feed In (L)]. If the DF carry-in motor does not work properly,reinstall it and reconnect the connector. If it is not repaired, replace it.	
7	Checking the DF middle motor	The DF middle motor does not operate correctly.	Execute U240 [Motor] > [Middle (H)] or [Middle (L)]. If the DF middle motor does not work properly,reinstall it and reconnect the connector. If it is not repaired, replace it.	
8	Replacing the DF PWB	The DF PWB is faulty.	Replace the DF PWB.	

J6310/J6311: DF middle sensor stay JAM/DF sub eject sensor stay JAM

After turning on the DF middle sensor, the DF middle sensor does not turn off even after a specified time has passed. (4,000 sheets finisher / 1,000 sheets finisher)
After the DF carry-in timing sensor is turned off, the DF sub eject sensor does not turn off even after a specified time has passed. (100-sheet staple finisher)
Target: J6310 (4,000 sheets finisher/100-sheet staple finisher), J6311 (1,000 finisher)

Step	Check description	Assumed cause	Measures	Reference
1	Checking the paper conveying parts	Rollers,guides,etc. are not installed properly. Or there is dirt,deformation,or wear.	Clean ,repair and reattach the conveying parts such as the roller,guide,etc. If not repaired, replace it.	
2	Checking the connection	The connector is not connected properly,or the wire is faulty.	Clean the terminals of the wire connector below and reinsert them. If there is no continuity, replace the wire. • DF middle sensor - DF PWB (4,000 sheets finisher/1,000 sheets finisher) • DF carry-in timing sensor - DF PWB (100-sheet staple finisher) • DF eject clutch - DF PWB (4,000 sheets finisher) • DF eject motor - DF PWB • DF middle motor - DF PWB	
3	Checking the DF middle sensor (4,000 sheets finisher / 1,000 sheets finisher)	The DF middle sensor does not operate correctly.	Execute U241 [Finisher] > [Middle Tray Eject]. If the DF middle sensor does not operate properly,reattach it and reconnect the connector. If not repaired, replace it.	
4	Checking the DF carry-in timing sensor (100-sheet staple finisher)	The DP entrance timing sensor does not operate properly.	Execute U241 [Finisher] > [Feed In Timing]. If the DF carry-in timing sensor does not operate properly,reinstall it and reconnect the connector. If it is not repaired, replace it.	
5	Checking the DF eject clutch (4,000 sheets finisher)	The DF exit clutch does not operate correctly.	Reattach the DF exit clutch and reconnect the connector. If not repaired, replace it.	
6	Checking the DF exit motor	The DF exit motor does not operate correctly.	Execute U240 [Motor] > [Eject (H)] or [Eject (L)]. If the DF exhaust motor does not work properly,reinstall it and reconnect the connector. If it is not repaired, replace it.	
7	Checking the DF middle motor	The DF middle motor does not operate correctly.	Execute U240 [Motor] > [Middle (H)] or [Middle (L)]. If the DF middle motor does not work properly,reinstall it and reconnect the connector. If it is not repaired, replace it.	
8	Replacing the DF PWB	The DF PWB is faulty.	Replace the DF PWB.	

J6400/J6401: DF eject sensor non-arrival JAM

After the DF middle sensor is turned on, the DF eject sensor does not turn on even after a specified time has passed.
Target: J6400 (4,000 sheets finisher), J6401 (1,000 sheets finisher)

Step	Check description	Assumed cause	Measures	Reference
1	Checking the paper conveying parts	Rollers,guides,etc. are not installed properly. Or there is dirt,deformation,or wear.	Clean ,repair and reattach the conveying parts such as the roller,guide,etc. If not repaired, replace it.	
2	Checking the connection	The connector is not connected properly,or the wire is faulty.	Clean the terminal of the following wire connectors and reconnect the connectors. If there is no continuity, replace the wire. • DF exit sensor - DF PWB • DF exit motor - DF PWB • DF tray motor - DF PWB	
3	Checking the DF exit sensor	The DF exit sensor does not operate correctly.	Execute U241 [Finisher] > [Middle Tray]. If the DF exit sensor does not operate properly,reattach it and reconnect the connector. If not repaired, replace it.	
4	Checking the DF exit motor	The DF exit motor does not operate correctly.	Execute U240 [Motor] > [Eject (H)] or [Eject (L)]. If the DF exhaust motor does not work properly,reinstall it and reconnect the connector. If it is not repaired, replace it.	
5	Checking the DF tray motor	The DF tray motor does not operate correctly.	Execute U240 [Motor] > [Tray]. If the DF tray motor does not operate properly,reattach it and reconnect the connector. If not repaired, replace it.	
6	Replacing the DF PWB	The DF PWB is faulty.	Replace the DF PWB.	

J6402: DF eject sensor non-arrival JAM

After the DF carry-in sensor is turned on, the DF eject sensor does not turn on even after a specified time has passed. (Inner finisher)

Step	Check description	Assumed cause	Measures	Reference
1	Checking the paper conveying parts	Rollers,guides,etc. are not installed properly. Or there is dirt,deformation,or wear.	Clean ,repair and reattach the conveying parts such as the roller,guide,etc. If not repaired, replace it.	
2	Checking the connection	The connector is not connected properly,or the wire is faulty.	Clean the terminal of the following wire connectors and reconnect the connectors. If there is no continuity, replace the wire. • DF exit sensor - DF PWB • DF exit motor - DF PWB • DF tray motor - DF PWB	
3	Checking the DF exit sensor	The DF exit sensor does not operate correctly.	Execute U241 [Finisher] > [Middle Tray]. If the DF exit sensor does not operate properly,reattach it and reconnect the connector. If not repaired, replace it.	
4	Checking the DF exit motor	The DF exit motor does not operate correctly.	Execute U240 [Motor] > [Eject (H)] or [Eject (L)]. If the DF exhaust motor does not work properly,reinstall it and reconnect the connector. If it is not repaired, replace it.	
5	Checking the DF tray motor	The DF tray motor does not operate correctly.	Execute U240 [Motor] > [Tray]. If the DF tray motor does not operate properly,reattach it and reconnect the connector. If not repaired, replace it.	
6	Replacing the DF PWB	The DF PWB is faulty.	Replace the DF PWB.	

J6400/J6401/J6402: DF middle sensor non-arrival jam

After the DF carry-in timing sensor is turned on, the DF middle sensor does not turn on even after a specified time has passed. (100-sheet staple finisher)
Target: J6400 (straight eject), J6401 (DF processing unit),J6402 (DF evasion drum)

Step	Check description	Assumed cause	Measures	Reference
1	Checking the paper conveying parts	Rollers,guides,etc. are not installed properly. Or there is dirt,deformation,or wear.	Clean ,repair and reattach the conveying parts such as the roller,guide,etc. If not repaired, replace it.	
2	Checking the connection	The connector is not connected properly,or the wire is faulty.	Clean the terminals of the wire connector below and reinsert them. If there is no continuity, replace the wire. • DF middle sensor - DF PWB • DF middle motor - DF PWB	
3	Checking the DF middle sensor	The DF middle sensor does not operate correctly.	Execute U241 [Finisher] > [Middle Tray Eject]. If the DF middle sensor does not operate properly,reattach it and reconnect the connector. If not repaired, replace it.	
4	Checking the DF middle motor	The DF middle motor does not operate correctly.	Execute U240 [Motor] > [Middle]. If the DF middle motor does not operate properly,reattach it and reconnect the connector. If not repaired, replace it.	
5	Replacing the DF PWB	The DF PWB is faulty.	Replace the DF PWB.	

J6410/J6411/J6412: DF exit sensor stay jam

After the DF eject sensor is turned on, the DF eject sensor does not turn off even after a specified time has passed.
Target: J6410 (4,000 sheets finisher), J6411 (1,000 sheets finisher),J6412 (inner finisher)

Step	Check description	Assumed cause	Measures	Reference
1	Checking the paper conveying parts	Rollers,guides,etc. are not installed properly. Or there is dirt,deformation,or wear.	Clean ,repair and reattach the conveying parts such as the roller,guide,etc. If not repaired, replace it.	
2	Checking the connection	The connector is not connected properly,or the wire is faulty.	Clean the terminals of the wire connector below and reinsert them. If there is no continuity, replace the wire. • DF eject sensor - DF PWB DF eject motor - DF PWB • DF tray motor - DF PWB	
3	Checking the DF exit sensor	The DF exit sensor does not operate correctly.	Execute U241 [Finisher] > [Middle Tray]. If the DF exit sensor does not operate properly,reattach it and reconnect the connector. If not repaired, replace it.	
4	Checking the DF exit motor	The DF exit motor does not operate correctly.	Execute U240 [Motor] > [Eject (H)] or [Eject (L)]. If the DF exhaust motor does not work properly,reinstall it and reconnect the connector. If it is not repaired, replace it.	
5	Checking the DF tray motor	The DF tray motor does not operate correctly.	Execute U240 [Motor] > [Tray]. If the DF tray motor does not operate properly,reattach it and reconnect the connector. If not repaired, replace it.	
6	Replacing the DF PWB	The DF PWB is faulty.	Replace the DF PWB.	

J6410/J6411/J6412: DF middle sensor stay jam

J6410 / J6411: after the DF carry-in timing sensor is turned off, the DF middle sensor does not turn off even after a specified time has passed. (Straight ejection, DF processing unit)
J6412: The DF middle sensor does not turn off even after a specified time has passed since the DF evasion drum paper was ejected. (DF shunting drum) (100-sheet staple finisher)

Step	Check description	Assumed cause	Measures	Reference
1	Checking the paper conveying parts	Rollers,guides,etc. are not installed properly. Or there is dirt,deformation,or wear.	Clean ,repair and reattach the conveying parts such as the roller,guide,etc. If not repaired, replace it.	
2	Checking the connection	The connector is not connected properly,or the wire is faulty.	Clean the terminals of the wire connector below and reinsert them. If there is no continuity, replace the wire. • DF carry-in timing sensor - DF PWB • DF middle sensor - DF PWB • DF middle motor - DF PWB • DF drum timing sensor - DF PWB (when J6412 occurs) • DF evasion drum motor - DF PWB (when J6412 occurs)	
3	Checking the DF entrance timing sensor	The DP entrance timing sensor does not operate properly.	Execute U241 [Finisher] > [Feed In Timing]. If the DF carry-in timing sensor does not operate properly,reinstall it and reconnect the connector. If it is not repaired, replace it.	
4	Checking the DF middle sensor	The DF middle sensor does not operate correctly.	Execute U241 [Finisher] > [Middle]. If the DF middle sensor does not work properly,reinstall it and reconnect the connector. If it is not repaired, replace it.	
5	Checking the DF middle motor	The DF middle motor does not operate correctly.	Execute U240 [Motor] > [Middle]. If the DF middle motor does not operate properly,reattach it and reconnect the connector. If not repaired, replace it.	
6	Checking the DF drum timing sensor (when J6412 occurs)	DF drum timing sensor does not operate properly.	Execute U241 [Finisher] > [Drum Timing]. If the DF Drum Timing Sensor does not work properly,reinstall it and reconnect the connector. If it is not repaired, replace it.	
7	Checking the DF evasion drum motor (when J6412 occurs)	The DF relief drum motor does not operate properly.	Execute U240 [Motor] > [Save]. If the DF relief drum motor does not operate properly,reattach it and reconnect the connector. If not repaired, replace it.	
8	Replacing the DF PWB	The DF PWB is faulty.	Replace the DF PWB.	

J6500: DF exit sensor non-arrival jam when exiting paper stack

At the time of bundle eject, the DF eject sensor does not turn on even after a specified time has passed after the DF middle sensor is turned on. (4,000 sheets finisher)
After turning on the DF middle sensor, the DF eject sensor does not turn on even after a specified time has passed. (Straight eject only) (100-sheet staple finisher)

Step	Check description	Assumed cause	Measures	Reference
1	Checking the paper conveying parts	Rollers,guides,etc. are not installed properly. Or there is dirt,deformation,or wear.	Clean ,repair and reattach the conveying parts such as the roller,guide,etc. If not repaired, replace it.	
2	Checking the connection	The connector is not connected properly,or the wire is faulty.	Clean the terminal of the following wire connectors and reconnect the connectors. If there is no continuity, replace the wire. • DF exit sensor - DF PWB • DF exit motor - DF PWB • DF tray motor - DF PWB	
3	Checking the DF exit sensor	The DF exit sensor does not operate correctly.	Execute U241 [Finisher] > [Middle Tray]. If the DF exit sensor does not operate properly,reattach it and reconnect the connector. If not repaired, replace it.	
4	Checking the DF exit motor	The DF exit motor does not operate correctly.	Execute U240 [Motor] > [Eject (H)] or [Eject (L)]. If the DF exhaust motor does not work properly,reinstall it and reconnect the connector. If it is not repaired, replace it.	
5	Checking the DF tray motor	The DF tray motor does not operate correctly.	Execute U240 [Motor] > [Tray]. If the DF tray motor does not operate properly,reattach it and reconnect the connector. If not repaired, replace it.	
6	Replacing the DF PWB	The DF PWB is faulty.	Replace the DF PWB.	

J6510/J6511/J6512: DF eject sensor stay JAM at bundle output

The DF eject sensor does not turn off even after a specified time has passed since the bundle eject started. (Finishers other than the 100-sheet staple finisher)
After the DF middle sensor is turned off, the DF eject sensor do not turn off even after a specified time has passed.

Step	Check description	Assumed cause	Measures	Reference
1	Checking the paper conveying parts	Rollers,guides,etc. are not installed properly. Or there is dirt,deformation,or wear.	Clean ,repair and reattach the conveying parts such as the roller,guide,etc. If not repaired, replace it.	
2	Checking the connection	The connector is not connected properly,or the wire is faulty.	Clean the terminals of the wire connector below and reinsert them. If there is no continuity, replace the wire. • DF eject sensor - DF PWB • DF eject motor - DF PWB • DF tray motor - DF PWB • DF middle sensor - DF PWB (100-sheet staple finisher)	
3	Checking the DF middle sensor	The DF middle sensor does not operate correctly.	Execute U241 [Finisher] > [Middle Tray Eject]. If the DF middle sensor does not operate properly,reattach it and reconnect the connector. If not repaired, replace it.	
4	Checking the DF exit sensor	The DF exit sensor does not operate correctly.	Execute U241 [Finisher] > [Middle Tray]. If the DF exit sensor does not operate properly,reattach it and reconnect the connector. If not repaired, replace it.	
5	Checking the DF exit motor	The DF exit motor does not operate correctly.	Execute U240 [Motor] > [Eject (H)] or [Eject (L)]. If the DF exhaust motor does not work properly,reinstall it and reconnect the connector. If it is not repaired, replace it.	
6	Checking the DF tray motor	The DF tray motor does not operate correctly.	Execute U240 [Motor] > [Tray]. If the DF tray motor does not operate properly,reattach it and reconnect the connector. If not repaired, replace it.	
7	Replacing the DF PWB	The DF PWB is faulty.	Replace the DF PWB.	

J6600: DF drum sensor non-arrival jam

The DF drum sensor does not turn on even after a specified time has passed after the DF carry-in sensor turns on. (4,000 sheets finisher)
The DF drum sensor does not turn on even after a specified time has passed after the DF carry-in timing sensor turns on.

Step	Check description	Assumed cause	Measures	Reference
1	Checking the paper conveying parts	Rollers,guides,etc. are not installed properly. Or there is dirt,deformation,or wear.	Clean ,repair and reattach the conveying parts such as the roller, guide,etc. If not repaired, replace it.	
2	Checking the connection	The connector is not connected properly,or the wire is faulty.	Clean the terminal of the following wire connectors and reconnect the connectors. If there is no continuity, replace the wire. • DF drum sensor - DF PWB • DF feed-shift solenoid 1 - DF PWB • DF retraction drum motor - DF PWB	
3	Checking the DF drum sensor (4,000 sheets finisher)	The DF drum sensor does not operate correctly.	Execute U241 [Finisher] > [Drum]. If the DF drum sensor does not operate properly,reattach it and reconnect the connector. If not repaired, replace it.	
4	Checking the DF drum sensor (100-sheet staple finisher)	The DF drum sensor does not operate correctly.	Reseat the DF drum sensor and reconnect the connector. If it is not repaired, replace it.	
5	Checking DF feed-shift solenoid 1	The DF feed-shift solenoid 1 does not operate correctly.	Execute U240 [Solenoid] > [Sub Tray]. If the DF feedshift solenoid 1 does not work properly,reinstall it and reconnect the connector. If it is not repaired, replace it.	
6	Checking the DF relief drum motor	The DF relief drum motor does not operate properly.	Execute U240 [Motor] > [Save (H)] or [Save (L)]. If the DF shunt drum motor does not work properly,reinstall it and reconnect the connector. If it is not repaired, replace it.	
7	Replacing the DF PWB	The DF PWB is faulty.	Replace the DF PWB.	

J6610: DF drum sensor stay jam

During the save operation, the DF drum sensor does not turn off even after a specified time has passed after the DF drum sensor was turned on. (4,000 sheets finisher)
After the DF carry-in timing sensor is turned off, the DF drum sensor does not turn on even after a specified time has passed.

Step	Check description	Assumed cause	Measures	Reference
1	Checking the paper conveying parts	Rollers,guides,etc. are not installed properly. Or there is dirt,deformation,or wear.	Clean ,repair and reattach the conveying parts such as the roller,guide,etc. If not repaired, replace it.	
2	Checking the connection	The connector is not connected properly,or the wire is faulty.	Clean the terminal of the following wire connectors and reconnect the connectors. If there is no continuity, replace the wire. • DF drum sensor - DF PWB • DF feed-shift solenoid 1 - DF PWB • DF retraction drum motor - DF PWB	
3	Checking the DF drum sensor (4,000 sheets finisher)	The DF drum sensor does not operate correctly.	Execute U241 [Finisher] > [Drum]. If the DF drum sensor does not operate properly,reattach it and reconnect the connector. If not repaired, replace it.	
4	Checking the DF drum sensor (100-sheet staple finisher)	The DF drum sensor does not operate correctly.	Reseat the DF drum sensor and reconnect the connector. If it is not repaired, replace it.	
5	Checking DF feed-shift solenoid 1	The DF feed-shift solenoid 1 does not operate correctly.	Execute U240 [Solenoid] > [Sub Tray]. If the DF feedshift solenoid 1 does not work properly,reinstall it and reconnect the connector. If it is not repaired, replace it.	
6	Checking the DF relief drum motor	The DF relief drum motor does not operate properly.	Execute U240 [Motor] > [Save (H)] or [Save (L)]. If the DF shunt drum motor does not work properly,reinstall it and reconnect the connector. If it is not repaired, replace it.	
7	Replacing the DF PWB	The DF PWB is faulty.	Replace the DF PWB.	

J6700: DF drum timing sensor non-arrival jam

After the DF drum sensor is turned on, the DF drum timing sensor does not turn on even after a specified time has passed. (100-sheet staple finisher)

Step	Check description	Assumed cause	Measures	Reference
1	Checking the paper conveying parts	Rollers,guides,etc. are not installed properly. Or there is dirt,deformation,or wear.	Clean ,repair and reattach the conveying parts such as the roller,guide,etc. If not repaired, replace it.	
2	Checking the connection	The connector is not connected properly,or the wire is faulty.	Clean the terminal of the following wire connectors and reconnect the connectors. If there is no continuity, replace the wire. • DF drum timing sensor - DF PWB • DF feed-shift solenoid 1 - DF PWB • DF relief drum motor - DF PWB	
3	Checking the DF drum timing sensor	DF drum timing sensor does not operate properly.	Execute U241 [Finisher] > [Drum Timing]. If the DF drum timing sensor does not work properly,reinstall it and reconnect the connector. If it is not repaired, replace it.	
4	Checking DF feed-shift solenoid 1	The DF feed-shift solenoid 1 does not operate correctly.	Execute U240 [Solenoid] > [Save Drum]. If DF feed-shift solenoid 1 does not operate properly,reattach it and reconnect the connector. If not repaired, replace it.	
5	Checking the DF relief drum motor	The DF relief drum motor does not operate properly.	Execute U240 [Motor] > [Save]. If the DF relief drum motor does not operate properly,reattach it and reconnect the connector. If not repaired, replace it.	
6	Replacing the DF PWB	The DF PWB is faulty.	Replace the DF PWB.	

J6710: DF drum sensor stay jam during paper conveying into the folding unit

When conveying paper to the folding unit, the DF drum sensor does not turn off even after a specified time has passed after the DF drum sensor was turned on. (4,000 sheets finisher)

Step	Check description	Assumed cause	Measures	Reference
1	Checking the paper conveying parts	Rollers,guides,etc. are not installed properly. Or there is dirt,deformation,or wear.	Clean ,repair and reattach the conveying parts such as the roller,guide,etc. If not repaired, replace it.	
2	Checking the connection	The connector is not connected properly,or the wire is faulty.	Clean the terminal of the following wire connectors and reconnect the connectors. If there is no continuity, replace the wire. • DF drum sensor - DF PWB • DF relief drum motor - DF PWB • BF entry motor - BF PWB • DF PWB - BF PWB	
3	Checking the DF drum sensor	The DF drum sensor does not operate correctly.	Execute U241 [Finisher] > [Drum]. If the DF drum sensor does not operate properly,reattach it and reconnect the connector. If not repaired, replace it.	
4	Checking the DF relief drum motor	The DF relief drum motor does not operate properly.	Execute U240 [Motor] > [Save (H)] or [Save (L)]. If the DF shunt drum motor does not work properly,reinstall it and reconnect the connector. If it is not repaired, replace it.	
5	Checking the BF paper entry motor	The BF entry motor does not operate correctly.	Execute U240 [Booklet] > [Feed In]. If the BF entry motor does not operate properly,reattach it and reconnect the connector. If not repaired, replace it.	
6	Replacing the DF PWB	The DF PWB is faulty.	Replace the DF PWB.	
7	Replacing the BF PWB	The BF PWB is faulty.	Replace the BF PWB.	

J6810/J6811/J6812: DF width adjustment sensor1 JAM/DF bundle eject stay JAM

During standby operation, the DF width adjustment sensor 1 does not turn off even after a specified time has passed after the DF width adjustment motor 1 is turned on. (Other than 100-sheet staple finisher)
The DF eject paper sensor does no

Step	Check description	Assumed cause	Measures	Reference
1	Checking the front DF adjusting plate	The DF front matching plate is not installed properly. Or there is dirt,deformation,or wear.	Check if the DF front adjusting plate shifts manually. Clean and reattach it if it does not shift smoothly. Then,replace it if it is not fixed.	
2	Checking the connection	The connector is not connected properly,or the wire is faulty.	Clean the terminal of the following wire connectors and reconnect the connectors. If there is no continuity, replace the wire. • DF side registration sensor 1 - DF PWB • DF side registration motor 1 - DF PWB	
3	Checking the connection (100-sheet staple finisher)	The connector is not connected properly,or the wire is faulty.	Clean the terminals of the wire connector below and reinsert them. If there is no continuity, replace the wire. • DF upper eject paper sensor/DF lower eject paper sensor - DF PWB	
4	Checking DF side registration sensor 1	The DF side registration sensor 1 does not operate correctly.	Execute U241 [Finisher] > [Width Front HP]. If DF side registration sensor 1 does not operate properly,reattach it and reconnect the connector. If not repaired, replace the motor.	
5	Checking DF side registration motor 1	The DF side registration motor 1 does not operate correctly.	Execute U240 [Motor] > [Width Test (A3)] or [Width Test (LD)]. If the DF width adjustment motor 1 does not work properly,reinstall it and reconnect the connector. If it is not repaired, replace it.	
6	Checking the DF eject paper sensor (100-sheet staple finisher)	The DF upper eject paper sensor or the DF lower eject paper sensor is not operating properly.	Execute U241 [Finisher] > [Eject]. If the DF upper eject paper sensor and DF lower eject paper sensor do not operate properly,reattach and reconnect the connector. If it is not repaired, replace it.	
7	Replacing the DF PWB	The DF PWB is faulty.	Replace the DF PWB.	

J6910/J6911/J6912: DF side registration sensor 2 jam

During standby operation, the DF width adjustment sensor 2 does not turn off even after a specified time has passed after the DF width adjustment motor 2 is turned on.
Target: J6910 (4,000 sheets finisher), J6911 (1,000 sheets finisher),J6912 (inner finisher)

Step	Check description	Assumed cause	Measures	Reference
1	Checking the rear DF adjusting plate	DF rear matching plate is not installed properly. Or there is dirt,deformation,or wear.	Check if the DF rear adjusting plate shifts manually. Clean and reattach it if it does not shift smoothly. Then,replace it if it is not fixed.	
2	Checking the connection	The connector is not connected properly,or the wire is faulty.	Clean the terminal of the following wire connectors and reconnect the connectors. If there is no continuity, replace the wire. • DF side registration sensor 2 - DF PWB • DF side registration motor 2 - DF PWB	
3	Checking DF side registration sensor 2	The DF side registration sensor 2 does not operate correctly.	Execute U241 [Finisher] > [Width Trail HP]. If DF side registration sensor 2 does not operate properly,reattach it and reconnect the connector. If not repaired, replace the motor.	
4	Checking DF side registration motor 2	The DF side registration motor 2 does not operate correctly.	Execute U240 [Motor] > [Width Test (A3)] or [Width Test (LD)]. If the DF width adjustment motor 2 does not work properly,reinstall it and reconnect the connector. If it is not repaired, replace it.	
5	Replacing the DF PWB	The DF PWB is faulty.	Replace the DF PWB.	

J7000/J7001/J7002: DF staple jam

After starting the DF staple motor, the home position of the DF staple cannot be detected. Or, the motor lock was detected while the DF staple motor was operating.
Target: J7000 (4,000 sheets finisher), J7001 (1,000 sheets finisher),J7002 (inner finisher)

Step	Check description	Assumed cause	Measures	Reference
1	Checking the staple	Check if the upper BF registration guide shifts manually,and reattach it if it does not smoothly shift.	Check if the lower BF registration guide shifts manually,and reattach it if it does not smoothly shift.	
2	Checking the drive parts	The DF staple motor does not rotate due to the excessive load.	Check if the DF staple motor rotates manually. Replace the DF staple unit if it does not rotate smoothly due to the damaged gear,etc.	
3	Checking the connection	The connector is not connected properly,or the wire is faulty.	Clean the terminal of the following wire connectors and reconnect the connectors. If there is no continuity, replace the wire. • DF staple unit - DF staple relay PWB • DF staple relay PWB - DF PWB	
4	Replacing the DF staple unit	The DF staple unit is faulty.	Replace the DF staple unit.	
5	Replacing the DF staple relay PWB	The DF staple relay PWB is faulty.	Replace the DF staple relay PWB.	
6	Replacing the DF PWB	The DF PWB is faulty.	Replace the DF PWB.	

J7100: BF paper entry sensor non-arrival jam

After the BF vertical conveying sensor is turned on, the BF carry-in sensor does not turn on even after a specified time has passed. (4,000 sheets finisher / 100 sheets staple finisher)

Step	Check description	Assumed cause	Measures	Reference
1	Checking the paper conveying parts	Rollers,guides,etc. are not installed properly. Or there is dirt,deformation,or wear.	Clean ,repair and reattach the conveying parts such as the roller, guide,etc. If not repaired, replace it.	
2	Checking the connection	The connector is not connected properly,or the wire is faulty.	Clean the terminal of the following wire connectors and reconnect the connectors. If there is no continuity, replace the wire. • BF entry sensor - BF PWB • BF entry motor - BF PWB • BF PWB - DF PWB	
3	Checking the BF paper entry sensor	The BF entry sensor does not operate correctly.	Execute U241 [Booklet] > [HP]. If the BF entry sensor does not operate properly,reattach it and reconnect the connector. If not repaired, replace it.	
4	Checking the BF paper entry motor	The BF entry motor does not operate correctly.	Execute U240 [Booklet] > [Feed In]. If the BF entry motor does not operate properly,reattach it and reconnect the connector. If not repaired, replace it.	
5	Replacing the BF PWB	The BF PWB is faulty.	Replace the BF PWB.	
6	Replacing the DF PWB	The DF PWB is faulty.	Replace the DF PWB.	

J7110: BF paper entry sensor stay jam

After the BF vertical conveying sensor is turned on, the BF carry-in sensor does not turn off even after a specified time has passed. (4,000 sheets finisher / 100 sheets staple finisher)

Step	Check description	Assumed cause	Measures	Reference
1	Checking the paper conveying parts	The roller,the guide,etc. is not attached properly. Or,they are dirty,deformed,worn out.	Clean ,repair and reattach the conveying parts such as the roller, guide,etc. If not repaired, replace it.	
2	Checking the connection	The connector is not connected properly,or the wire is faulty.	Clean the terminal of the following wire connectors and reconnect the connectors. If there is no continuity, replace the wire. • BF entry sensor - BF PWB • BF entry motor - BF PWB • BF PWB - DF PWB	
3	Checking the BF paper entry sensor	The BF entry sensor does not operate correctly.	Execute U241 [Booklet] > [HP]. If the BF entry sensor does not operate properly,reattach it and reconnect the connector. If not repaired, replace it.	
4	Checking the BF paper entry motor	The BF entry motor does not operate correctly.	Execute U240 [Booklet] > [Feed In]. If the BF entry motor does not operate properly,reattach it and reconnect the connector. If not repaired, replace it.	
5	Replacing the BF PWB	The BF PWB is faulty.	Replace the BF PWB.	
6	Replacing the DF PWB	The DF PWB is faulty.	Replace the DF PWB.	

J7200: BF exit sensor non-arrival jam

The BF eject sensor does not turn on even after a specified time has passed since the start of the middle folding operation. (4,000 sheets finisher / 100 sheets staple finisher)

Step	Check description	Assumed cause	Measures	Reference
1	Checking the paper conveying parts	Rollers,guides,etc. are not installed properly. Or there is dirt,deformation,or wear.	Clean ,repair and reattach the conveying parts such as the roller,guide,etc. If not repaired, replace it.	
2	Checking the connection	The connector is not connected properly,or the wire is faulty.	Clean the terminal of the following wire connectors and reconnect the connectors. If there is no continuity, replace the wire. • BF exit sensor - BF PWB • BF blade motor - BF PWB • BF PWB - DF PWB	
3	Checking the BF exit sensor	The BF exit sensor does not operate correctly.	Execute U241 [Booklet] > [Eject]. If the BF exit sensor does not operate properly,reattach it and reconnect the connector. If not repaired, replace it.	
4	Checking the BF blade motor	The BF blade motor does not operate correctly.	Execute U240 [Booklet] > [Blade]. If the BF blade motor does not operate properly,reattach it and reconnect the connector. If not repaired, replace it.	
5	Replacing the BF PWB	The BF PWB is faulty.	Replace the BF PWB.	
6	Replacing the DF PWB	The DF PWB is faulty.	Replace the DF PWB.	

J7210: BF exit sensor stay jam

During the center folding operation, the BF eject sensor does not turn off even after a specified time has passed after the BF eject sensor is turned on. (4,000-sheet finisher / 100-sheet binding staple finisher)
During the center-folding operation, after sending the main unit eject command, the output completion of the BF process tray cannot be detected even after a specified time has passed. (100-sheet staple finisher)
During the center folding operation, after receiving the output completion of the BF process tray, the output completion of the BF tray cannot be detected even after a specified time has passed. (100-sheet staple finisher)

Step	Check description	Assumed cause	Measures	Reference
1	Checking the BF tray	The BF tray is not properly attached.	Remove the paper and reattach the BF tray.	
2	Checking the paper conveying parts	Rollers,guides,etc. are not installed properly. Or there is dirt,deformation,or wear.	Clean ,repair and reattach the conveying parts such as the roller,guide,etc. If not repaired, replace it.	
3	Checking the connection	The connector is not connected properly,or the wire is faulty.	Clean the terminal of the following wire connectors and reconnect the connectors. If there is no continuity, replace the wire. • BF exit sensor - BF PWB • BF PWB - DF PWB	
4	Checking the BF exit sensor	The BF exit sensor does not operate correctly.	Execute U241 [Booklet] > [Eject]. If the BF exit sensor does not operate properly,reattach it and reconnect the connector. If not repaired, replace it.	
5	Replacing the BF PWB	The BF PWB is faulty.	Replace the BF PWB.	
6	Replacing the DF PWB	The DF PWB is faulty.	Replace the DF PWB.	

J7300: BF exit sensor non-arrival jam at tri-folding

The BF eject sensor does not turn on even after a specified time has passed since the start of the tri-fold operation. (4,000 sheets finisher / 100 sheets staple finisher)

Step	Check description	Assumed cause	Measures	Reference
1	Checking the paper conveying parts	Rollers,guides,etc. are not installed properly. Or there is dirt,deformation,or wear.	Clean ,repair and reattach the conveying parts such as the roller,guide,etc. If not repaired, replace it.	
2	Checking the connection	The connector is not connected properly,or the wire is faulty.	Clean the terminal of the following wire connectors and reconnect the connectors. If there is no continuity, replace the wire. • BF exit sensor - BF PWB • BF feed-shift solenoid - BF PWB • BF PWB - DF PWB	
3	Checking the BF exit sensor	The BF exit sensor does not operate correctly.	Execute U241 [Booklet] > [Eject]. If the BF exit sensor does not operate properly,reattach it and reconnect the connector. If not repaired, replace it.	
4	Checking the BF feed-shift solenoid	The BF feed-shift solenoid does not operate correctly.	Execute U240 [Solenoid] > [Three Fold]. If the BF feed-shift solenoid does not operate properly,reattach it and reconnect the connector. If not repaired, replace it.	
5	Replacing the BF PWB	The BF PWB is faulty.	Replace the BF PWB.	
6	Replacing the DF PWB	The DF PWB is faulty.	Replace the DF PWB.	

J7310: BF exit sensor stay jam at tri-folding

During the tri-fold operation, the BF eject sensor does not turn off even after a specified time has passed after the BF eject sensor is turned on. (4,000-sheet finisher / 100-sheet staple finisher)
During the tri-fold operation, the completion of BF processing tray ejection cannot be detected even after a specified time has passed after the main unit ejection command was sent. (100-sheet staple finisher)
During the tri-fold operation, the completion of BF tray ejection cannot be detected even after a specified time has passed after receiving the completion of BF processing tray ejection. (100-sheet staple finisher)

Step	Check description	Assumed cause	Measures	Reference
1	Checking the BF tray	The BF tray is not properly attached.	Remove the paper and reattach the BF tray.	
2	Checking the paper conveying parts	Rollers,guides,etc. are not installed properly. Or there is dirt,deformation,or wear.	Clean ,repair and reattach the conveying parts such as the roller,guide,etc. If not repaired, replace it.	
3	Checking the connection	The connector is not connected properly,or the wire is faulty.	Clean the terminal of the following wire connectors and reconnect the connectors. If there is no continuity, replace the wire. • BF exit sensor - BF PWB • BF PWB - DF PWB	
4	Checking the BF exit sensor	The BF exit sensor does not operate correctly.	Execute U241 [Booklet] > [Eject]. If the BF exit sensor does not operate properly,reattach it and reconnect the connector. If not repaired, replace it.	
5	Replacing the BF PWB	The BF PWB is faulty.	Replace the BF PWB.	
6	Replacing the DF PWB	The DF PWB is faulty.	Replace the DF PWB.	

J7400: Upper BF side registration jam

After moving the BF width adjustment upper guide in the direction of the BF width adjustment sensor2,the sensor does not detect ON even after a specified time has passed. (4,000 sheets finisher)

Step	Check description	Assumed cause	Measures	Reference
1	Checking the upper BF side registration guide	The guide for BF width adjustment is not installed properly. Or there is dirt,deformation,or wear.	Check if the upper BF side registration guide shifts manually,and reattach it if it does not smoothly shift.	
2	Checking the connection	The connector is not connected properly,or the wire is faulty.	Clean the terminal of the following wire connectors and reconnect the connectors. If there is no continuity, replace the wire. • BF side registration sensor 2 - BF PWB • BF side registration motor 2 - BF PWB • BF PWB - DF PWB	
3	Checking BF side registration sensor 2	The BF side registration sensor 2 does not operate correctly.	Execute U241 [Booklet] > [Width UP HP]. If the BF width adjustment sensor 2 does not operate properly,reinstall it and reconnect the connector. If it is not repaired, replace it.	
4	Checking BF side registration motor 2	The BF side registration motor 2 does not operate correctly.	Execute U240 [Booklet] > [Width Test (A3)] or [Width Test (LD)]. If the BF width adjustment Motor 2 does not operate properly,reinstall it and reconnect the connector. If it is not repaired, replace it.	
5	Replacing the BF PWB	The BF PWB is faulty.	Replace the BF PWB.	
6	Replacing the DF PWB	The DF PWB is faulty.	Replace the DF PWB.	

J7500: Lower BF side registration jam

After moving the BF width adjustment upper guide in the direction of the BF width adjustment sensor1,the sensor does not detect ON even after a specified time has passed. (4,000 sheets finisher)

Step	Check description	Assumed cause	Measures	Reference
1	Checking the lower BF side registration guide	The lower BF side registration guide is not properly attached,or it is dirty,deformed,or worn down.	Check if the lower BF side registration guide shifts manually,and reattach it if it does not smoothly shift.	
2	Checking the connection	The connector is not connected properly,or the wire is faulty.	Clean the terminal of the following wire connectors and reconnect the connectors. If there is no continuity, replace the wire. • BF side registration sensor 1 - BF PWB • BF side registration motor 1 - BF PWB • BF PWB - DF PWB	
3	Checking BF side registration sensor 1	The BF side registration sensor 1 does not operate correctly.	Execute U241 [Booklet] > [Width Down HP]. If the BF width adjustment sensor 1 does not work properly,reinstall it and reconnect the connector. If it is not repaired, replace it.	
4	Checking BF side registration motor 1	The BF side registration motor 1 does not operate correctly.	Execute U240 [Booklet] > [Width Test (A3)] or [Width Test (LD)]. If the BF Width adjustment Motor 1 does not work properly,reinstall it and reconnect the connector. If it is not repaired, replace it.	
5	Replacing the BF PWB	The BF PWB is faulty.	Replace the BF PWB.	
6	Replacing the DF PWB	The DF PWB is faulty.	Replace the DF PWB.	

J7600: BF staple jam

After starting the BF staple motor, the home position of the BF staple cannot be detected. Or, the motor lock was detected while the BF staple motor was operating. (4,000 sheets finisher)

Step	Check description	Assumed cause	Measures	Reference
1	Checking the staple	Check if the upper BF registration guide shifts manually,and reattach it if it does not smoothly shift.	Check if the lower BF registration guide shifts manually,and reattach it if it does not smoothly shift.	
2	Checking the BF staple unit	The BF staple motor does not rotate due to the excessive load.	Check if the BF staple motor rotates manually. Replace the BF staple unit if it does not rotate smoothly due to the damaged gear,etc.	
3	Checking the connection	The connector is not connected properly,or the wire is faulty.	Clean the terminal of the following wire connectors and reconnect the connectors. If there is no continuity, replace the wire. • BF staple unit (BF staple motor) - BF PWB • BF PWB - DF PWB	
4	Replacing the BF staple unit	There is something wrong with the BF staple motor in the BF staple unit.	Replace the BF staple unit.	
5	Replacing the BF PWB	The BF PWB is faulty.	Replace the BF PWB.	
6	Replacing the DF PWB	The DF PWB is faulty.	Replace the DF PWB.	

J7700: BF vertical conveying sensor non-arrival jam

The BF vertical conveying sensor does not turn on even after a specified time has passed since the Main unit eject signal was received. (4,000 sheets finisher / 100 sheets staple finisher)

Step	Check description	Assumed cause	Measures	Reference
1	Checking the paper conveying parts	Rollers,guides,etc. are not installed properly. Or there is dirt,deformation,or wear.	Clean ,repair and reattach the conveying parts such as the roller, guide,etc. If not repaired, replace it.	
2	Checking the connection	The connector is not connected properly,or the wire is faulty.	Clean the terminal of the following wire connectors and reconnect the connectors. If there is no continuity, replace the wire. • BF vertical conveying sensor - BF PWB • BF entry motor - BF PWB • BF PWB - DF PWB	
3	Checking the BF vertical conveying sensor	The BF vertical conveying sensor does not operate correctly.	Execute U241 [Booklet] > [Vertical Feed]. If the BF vertical conveying sensor does not operate properly,reattach it and reconnect the connector. If not repaired, replace it.	
4	Checking the drive parts	The BF paper entry motor drive parts are faulty.	Check if the BF entry motor rotates by manually and if it does not rotate smoothly due to the damage of the gear,etc.,replace the drive parts of the BF entry motor.	
5	Checking the BF paper entry motor	The BF entry motor does not operate correctly.	Execute U240 [Booklet] > [Feed In]. If the BF entry motor does not operate properly,reattach it and reconnect the connector. If not repaired, replace it.	
6	Replacing the BF PWB	The BF PWB is faulty.	Replace the BF PWB.	
7	Replacing the DF PWB	The DF PWB is faulty.	Replace the DF PWB.	

J7710: BF vertical conveying sensor stay jam

After the BF vertical conveying sensor is turned on, the BF vertical conveying sensor does not turn off even after a specified time has passed. (4,000 sheets finisher / 100 sheets staple finisher)

Step	Check description	Assumed cause	Measures	Reference
1	Checking the paper conveying parts	Rollers,guides,etc. are not installed properly. Or there is dirt,deformation,or wear.	Clean ,repair and reattach the conveying parts such as the roller,guide,etc. If not repaired, replace it.	
2	Checking the connection	The connector is not connected properly,or the wire is faulty.	Clean the terminal of the following wire connectors and reconnect the connectors. If there is no continuity, replace the wire. • BF vertical conveying sensor - BF PWB • BF entry motor - BF PWB • BF PWB - DF PWB	
3	Checking the BF vertical conveying sensor	The BF vertical conveying sensor does not operate correctly.	Execute U241 [Booklet] > [Vertical Feed]. If the BF vertical conveying sensor does not operate properly,reattach it and reconnect the connector. If not repaired, replace it.	
4	Checking the drive parts	The BF paper entry motor drive parts are faulty.	Check if the BF entry motor rotates by manually and if it does not rotate smoothly due to the damage of the gear,etc.,replace the drive parts of the BF entry motor.	
5	Checking the BF paper entry motor	The BF entry motor does not operate correctly.	Execute U240 [Booklet] > [Feed In]. If the BF entry motor does not operate properly,reattach it and reconnect the connector. If not repaired, replace it.	
6	Replacing the BF PWB	The BF PWB is faulty.	Replace the BF PWB.	
7	Replacing the DF PWB	The DF PWB is faulty.	Replace the DF PWB.	

J7800: Mail Box exit non-arrival jam

The MT tray ejection sensor does not turn on even after a specified time has passed after ejecting the paper from the Main unit. (4,000 sheets finisher)

Step	Check description	Assumed cause	Measures	Reference
1	Checking the belt and the neighboring parts	The belt and peripheral parts are not installed properly. Or there is dirt,deformation,or wear.	Execute U240 [Mail Box] > [Conv] to check the operation of the belt. If the belt does not operate correctly,repair the belt and the neighboring parts (feed-shift claw lever,guide,etc.). If not repaired, replace the part.	
2	Checking the connection	The connector is not connected properly,or the wire is faulty.	Clean the terminal of the following wire connectors and reconnect the connectors. If there is no continuity, replace the wire. • MT tray exit sensor 1,2 - MT PWB • MT home position sensor - MT PWB • MT conveying motor - MT PWB • MT PWB - DF PWB	
3	Checking the MT tray exit sensor 1 or 2	MT tray exit sensor 1 or 2 does not operate properly.	Execute U241 [Mail Box] > [Eject]. If MT tray exit sensor 1 or 2 does not operate properly,reattach it and reconnect the connector. If not repaired, replace it.	
4	Checking the MT home position sensor	The belt holding plate does not operate properly since the MB home position sensor is not properly connected or not attached.	Execute U241 [Mail Box] > [Motor HP]. If the MT home position sensor does not operate properly,reattach it and reconnect the connector. If not repaired, replace it.	
5	Checking the MT conveying motor	The MT conveying motor does not operate properly.	Execute U240 [Mail Box] > [Conv]. If the MT conveying motor does not operate properly,reattach it and reconnect the connector. If not repaired, replace it.	
6	Replacing the MT PWB	The MT PWB is faulty.	Replace the MT PWB.	
7	Replacing the DF PWB	The DF PWB is faulty.	Replace the DF PWB.	

J7810: Mail Box exit stay jam

After turning on the MT tray eject sensor, the MT tray eject sensor does not turn off even after a specified time has passed. (4,000 sheets finisher)

Step	Check description	Assumed cause	Measures	Reference
1	Checking the belt and the neighboring parts	The belt and peripheral parts are not installed properly. Or there is dirt,deformation,or wear.	Execute U240 [Mail Box] > [Conv] to check the operation of the belt. If the belt does not operate correctly,repair the belt and the neighboring parts (feed-shift claw lever,guide,etc.). If not repaired, replace the part.	
2	Checking the MT tray	The MT tray is not properly attached.	Reattach the MT tray.	
3	Checking the connection	The connector is not connected properly,or the wire is faulty.	Clean the terminal of the following wire connectors and reconnect the connectors. If there is no continuity, replace the wire. • MT tray exit sensor 1,2 - MT PWB • MT conveying motor - MT PWB • MT PWB - DF PWB	
4	Checking the MT tray exit sensor 1 or 2	MT tray exit sensor 1 or 2 does not operate properly.	Execute U241 [Mail Box] > [Eject]. If MT tray exit sensor 1 or 2 does not operate properly,reattach it and reconnect the connector. If not repaired, replace it.	
5	Checking the MT conveying motor	The MT conveying motor does not operate properly.	Execute U240 [Mail Box] > [Conv]. If the MT conveying motor does not operate properly,reattach it and reconnect the connector. If not repaired, replace it.	
6	Replacing the MT PWB	The MT PWB is faulty.	Replace the MT PWB.	
7	Replacing the DF PWB	The DF PWB is faulty.	Replace the DF PWB.	

J7900/J7901/J7902: DF paddle jam

After starting the DF paddle motor, the DF paddle sensor does not turn on even after a specified time has passed.
Target: J7900 (4,000 sheets finisher), J7901 (1,000 sheets finisher),J7902 (inner finisher)

Step	Check description	Assumed cause	Measures	Reference
1	Removing the paper	The paper is jammed in the DF paddle.	Remove the jammed paper from the DF paddle.	
2	Checking the DF paddle drive parts	The DF paddle drive parts are not properly attached,or it is faulty.	Reattach or replace the DF paddle drive parts.	
3	Checking the connection	The connector is not connected properly,or the wire is faulty.	Clean the terminal of the following wire connectors and reconnect the connectors. If there is no continuity, replace the wire. • DF middle motor - DF PWB • DF paddle sensor - DF PWB	
4	Replacing the DF middle motor	The DF middle motor is faulty.	Execute U240 [Motor] > [Middle (H)] or [Middle (L)]. If it does not work properly,replace the DF middle motor.	
5	Checking the DF paddle sensor	The DF paddle sensor is not properly attached,or it is faulty.	Execute U241 [Finisher] > [Lead Paddle]. If the DF paddle sensor does not operate properly,reattach it and reconnect the connector. If not repaired, replace the sensor.	
6	Replacing the DF PWB	The DF PWB is faulty.	Replace the DF PWB.	

J7910: DF adjusting release motor jam

Even if the DF matching release motor is driven in the DF matching release HP sensor fluctuation direction for a specified time, the sensor change is not detected. (100-sheet staple finisher)

Step	Check description	Assumed cause	Measures	Reference
1	Checking the connection	The connector is not connected properly,or the wire is faulty.	Clean the terminals of the wire connector below and reinsert them. If there is no continuity, replace the wire. • DF adjusting HP sensor - DF PWB • DF adjusting motor - DF PWB	
2	Checking the DF adjusting release HP sensor	The DF adjusting release HP sensor does not operate properly.	Execute U241 [Finisher] > [Match Coro HP]. If the DF adjustment release HP sensor does not work properly,reinstall it and reconnect the connector. If it is not repaired, replace it.	
3	Checking the DF adjusting release motor	The DF adjusting release motor does not operate properly.	Execute U240 [Motor] > [Match Pressure]. If the DF adjustment release motor does not work properly,reinstall it and reconnect the connector. If it is not repaired, replace it.	
4	Replacing the DF PWB	The DF PWB is faulty.	Replace the DF PWB.	

J7911: DF pull-in guide release motor JAM

Even if the DF pull-in guide release motor is driven in the DF pull-in guide release HP sensor fluctuation direction for a specific time, no change in the sensor is detected. (100-sheet staple finisher)

Step	Check description	Assumed cause	Measures	Reference
1	Checking the connection	The connector is not connected properly,or the wire is faulty.	Clean the terminals of the wire connector below and reinsert them. If there is no continuity, replace the wire. • DF pull-in guide release HP sensor - DF PWB • DF pull-in guide release motor - DF PWB	
2	DF pull-in guide release Check HP sensor	DF pull-in guide release HP sensor is not working properly.	Execute U241 [Finisher] > [Rear Beat HP]. If the DF pull-in guide release HP sensor does not work properly,reinstall it and reconnect the connector. If it is not repaired, replace it.	
3	Checking the DF lead-in guide release motor	The DF retract guide release motor is not operating properly.	Execute U240 [Motor] > [Beat]. If the DF pull-in pulley pressure guide release motor does not operate properly,reinstall it and reconnect the connector. If it is not repaired, replace it.	
4	Replacing the DF PWB	The DF PWB is faulty.	Replace the DF PWB.	

J7912: DF withdraw pulley pressure release motor jam

Even if the DF pull-in roller pressure release motor is driven in the DF pull-in release HP sensor fluctuation direction for a specified time, no change in the sensor is detected. (100-sheet staple finisher)

Step	Check description	Assumed cause	Measures	Reference
1	Checking the connection	The connector is not connected properly,or the wire is faulty.	Clean the terminals of the wire connector below and reinsert them. If there is no continuity, replace the wire. • DF pull-in release HP sensor - DF PWB • DF pull-in roller pressure release motor - DF PWB	
2	DF pull-in release HP sensor check	DF pull-in release HP sensor is not working properly.	Execute U241 [Finisher] > [Pull Coro HP]. If the DF pull-out HP sensor does not work properly,reinstall it and reconnect the connector. If it is not repaired, replace it.	
3	Checking the DF withdraw pulley pressure release motor	The DF withdraw pulley pressure release motor does not operate properly.	Execute U240 [Motor] > [Pull Pressure]. If the DF pull-in pulley pressure release motor does not work properly,reinstall it and reconnect the connector. If it is not repaired, replace it.	
4	Replacing the DF PWB	The DF PWB is faulty.	Replace the DF PWB.	

J7913: DF exit release motor jam

Even if the DF eject release motor is driven in the DF eject pressure release HP sensor fluctuation direction for a specified time, the change in the sensor is not detected. (100-sheet staple finisher)

Step	Check description	Assumed cause	Measures	Reference
1	Checking the connection	The connector is not connected properly,or the wire is faulty.	Clean the terminals of the wire connector below and reinsert them. If there is no continuity, replace the wire. • DF eject pressure release HP sensor - DF PWB • DF eject release motor - DF PWB	
2	Checking the DF exit pressure release HP sensor	The DF exit pressure release HP sensor does not operate properly.	Execute U241 [Finisher] > [Eject Press HP]. If the DF exhaust pressure release HP sensor does not work properly,reinstall it and reconnect the connector. If it is not repaired, replace it.	
3	Checking the DF exit release motor	The DF exit release motor does not operate properly.	Execute U240 [Motor] > [Eject Unlock (Full)]. If the DF eject release motor does not work properly,reinstall it and reconnect the connector. If it is not repaired, replace it.	
4	Replacing the DF PWB	The DF PWB is faulty.	Replace the DF PWB.	

J7914: DF shift motor 2 jam

Even if the DF shift motor 2 is driven in the DF front shift HP sensor fluctuation direction for a specified time, the sensor change is not detected. (100-sheet staple finisher)

Step	Check description	Assumed cause	Measures	Reference
1	Checking the connection	The connector is not connected properly,or the wire is faulty.	Clean the terminal of the following wire connectors and reconnect the connectors. If there is no continuity, replace the wire. • DF front shift HP sensor - DF PWB • DF shift motor 2 - DF PWB	
2	Checking the DF front shift HP sensor	The DF front shift HP sensor does not operate properly.	Execute U241 [Finisher] > [Shift Front HP]. If the DF front shift HP sensor does not work properly,reinstall it and reconnect the connector. If it is not repaired, replace it.	
3	Checking DF shift motor 2	DF shift motor 2 does not operate properly.	Execute U240 [Motor] > [Sort Test]. If DF Shift Motor 2 does not work properly,reinstall it and reconnect the connector. If it is not repaired, replace it.	
4	Replacing the DF PWB	The DF PWB is faulty.	Replace the DF PWB.	

J7915: DF shift motor 1 jam

Even if the DF shift motor 1 is driven in the direction of fluctuation of the HP sensor after DF for a specified time, no change in the sensor is detected. (100-sheet staple finisher)

Step	Check description	Assumed cause	Measures	Reference
1	Checking the connection	The connector is not connected properly,or the wire is faulty.	Clean the terminal of the following wire connectors and reconnect the connectors. If there is no continuity, replace the wire. • DF rear shift HP sensor - DF PWB • DF shift motor 1 - DF PWB	
2	Checking the DF rear shift HP sensor	The DF rear shift HP sensor does not operate properly.	Execute U241 [Finisher] > [Shift Tail HP]. If the DF rear shift HP sensor does not work properly,reinstall and reconnect the connector. If it is not repaired, replace it.	
3	Checking DF shift motor 1	DF shift motor 1 does not operate properly.	Execute U240 [Motor] > [Sort Test]. If DF shift motor 1 does not work properly,reinstall it and reconnect the connector. If it is not repaired, replace it.	
4	Replacing the DF PWB	The DF PWB is faulty.	Replace the DF PWB.	

J7916: DF shift release motor jam

Even if the DF shift release motor is driven in the direction of fluctuation of the DF shift release sensor for a specified time, no change in the sensor is detected. (100-sheet staple finisher)

Step	Check description	Assumed cause	Measures	Reference
1	Checking the connection	The connector is not connected properly,or the wire is faulty.	Clean the terminal of the following wire connectors and reconnect the connectors. If there is no continuity, replace the wire. • DF shift release sensor - DF PWB • DF shift release motor - DF PWB	
2	Checking the DF shift release sensor	The DF shift release sensor does not operate properly.	Execute U241 [Finisher] > [Shift Unlock HP]. If the DF shift release sensor does not operate properly,reattach it and reconnect the connector. If not repaired, replace the sensor.	
3	Checking the DF shift release motor	The DF shift release motor does not operate properly.	Execute U240 [Motor] > [Sort Test]. If the DF shift release motor does not work properly,reinstall it and reconnect the connector. If it is not repaired, replace it.	
4	Replacing the DF PWB	The DF PWB is faulty.	Replace the DF PWB.	

J7917: DF side registration motor 1 jam

Even if the DF width adjustment motor 1 is driven in the fluctuation direction of the DF width adjustment sensor 1 for a specified time, the change in the sensor is not detected. (100-sheet staple finisher)

Step	Check description	Assumed cause	Measures	Reference
1	Checking the connection	The connector is not connected properly,or the wire is faulty.	Clean the terminals of the wire connector below and reinsert them. If there is no continuity, replace the wire. • DF width adjustment sensor 1 - DF PWB • DF width adjustment motor 1 - DF PWB	
2	Checking DF side registration sensor 1	The DF side registration sensor 1 does not operate correctly.	Execute U241 [Finisher] > [Width Front HP]. If DF side registration sensor 1 does not operate properly,reattach it and reconnect the connector. If not repaired, replace the motor.	
3	Checking DF side registration motor 1	The DF side registration motor 1 does not operate correctly.	Execute U240 [Motor] > [Width Test]. If DF side registration motor 1 does not operate properly,reattach it and reconnect the connector. If not repaired, replace it.	
4	Replacing the DF PWB	The DF PWB is faulty.	Replace the DF PWB.	

J7918: DF side registration motor 2 jam

Even if the DF width adjustment motor 2 is driven in the fluctuation direction of the DF width adjustment sensor 2 for a specified time, the change in the sensor is not detected. (100-sheet staple finisher)

Step	Check description	Assumed cause	Measures	Reference
1	Checking the connection	The connector is not connected properly,or the wire is faulty.	Clean the terminals of the wire connector below and reinsert them. If there is no continuity, replace the wire. • DF width adjustment sensor 2 - DF PWB • DF width adjustment motor 2 - DF PWB	
2	Checking DF side registration sensor 2	The DF side registration sensor 2 does not operate correctly.	Execute U241 [Finisher] > [Width Trail HP]. If DF side registration sensor 2 does not operate properly,reattach it and reconnect the connector. If not repaired, replace the motor.	
3	Checking DF side registration motor 2	The DF side registration motor 2 does not operate correctly.	Execute U240 [Motor] > [Width Test]. If DF side registration motor 2 does not operate properly,reattach it and reconnect the connector. If not repaired, replace it.	
4	Replacing the DF PWB	The DF PWB is faulty.	Replace the DF PWB.	

J7919: DF slide motor jam

Even if the DF slide motor is driven in the direction of fluctuation of the DF slide sensor for a specified time, no change in the sensor is detected. (100-sheet staple finisher)

Step	Check description	Assumed cause	Measures	Reference
1	Checking the connection	The connector is not connected properly,or the wire is faulty.	Clean the terminal of the following wire connectors and reconnect the connectors. If there is no continuity, replace the wire. • DF slide sensor - DF PWB • DF slide motor - DF PWB	
2	Checking the DF slide sensor	The DF slide sensor does not operate properly.	Execute U241 [Finisher] > [Staple HP]. If the DF slide sensor does not work properly,reinstall it and reconnect the connector. If it is not repaired, replace it.	
3	Checking the DF slide motor	The DF slide motor does not operate properly.	Execute U240 [Motor] > [Staple Move]. If the DF slide motor does not work properly,reinstall it and reconnect the connector. If it is not repaired, replace it.	
4	Replacing the DF PWB	The DF PWB is faulty.	Replace the DF PWB.	

J7920: DF staple motor jam

The home position is not detected even after a specified time has passed after the DF staple motor was started. (100-sheet staple finisher)

Step	Check description	Assumed cause	Measures	Reference
1	Checking the staple	Check if the upper BF registration guide shifts manually,and reattach it if it does not smoothly shift.	Check if the lower BF registration guide shifts manually,and reattach it if it does not smoothly shift.	
2	Checking the drive parts	The DF staple motor does not rotate due to the excessive load.	Check if the DF staple motor rotates manually. Replace the DF staple unit if it does not rotate smoothly due to the damaged gear,etc.	
3	Checking the connection	The connector is not connected properly,or the wire is faulty.	Clean the terminal of the following wire connectors and reconnect the connectors. If there is no continuity, replace the wire. • DF staple unit - DF staple relay PWB • DF staple relay PWB - DF PWB	
4	Replacing the DF staple unit	The DF staple unit is faulty.	Replace the DF staple unit.	
5	Replacing the DF staple relay PWB	The DF staple relay PWB is faulty.	Replace the DF staple relay PWB.	
6	Replacing the DF PWB	The DF PWB is faulty.	Replace the DF PWB.	

J7921: DF bundle eject motor1 JAM

Even if the DF bundle eject motor 1 is driven in the fluctuation direction of the DF bundle eject HP sensor 1 for a specified time, the change in the sensor is not detected. (100-sheet staple finisher)

Step	Check description	Assumed cause	Measures	Reference
1	Checking the connection	The connector is not connected properly,or the wire is faulty.	Clean the terminals of the wire connector below and reinsert them. If there is no continuity, replace the wire. • Bundle carry-out HP sensor 1 - DF PWB • Bundle eject motor 1 - DF PWB	
2	Checking DF bundle exit sensor 1	DF bundle exit sensor 1 does not operate properly.	Execute U241 [Finisher] > [Bundle Eject HP1]. If the DF bundle eject HP Sensor 1 does not work properly,reinstall it and reconnect the connector. If it is not repaired, replace it.	
3	Checking DF bundle exit motor 1	DF bundle exit motor 1 does not operate properly.	Execute U240 [Motor] > [Bundle Up]. If DF bundle Eject motor 1 does not work properly,reinstall it and reconnect the connector. If it is not repaired, replace it.	
4	Replacing the DF PWB	The DF PWB is faulty.	Replace the DF PWB.	

J7922: DF bundle eject motor2 JAM

Even if the DF bundle eject motor 2 is driven in the fluctuation direction of the DF bundle eject HP sensor 2 for a specified time, the change in the sensor is not detected. (100-sheet staple finisher)

Step	Check description	Assumed cause	Measures	Reference
1	Checking the connection	The connector is not connected properly,or the wire is faulty.	Clean the terminals of the wire connector below and reinsert them. If there is no continuity, replace the wire. • Bundle carry-out HP sensor 2 - DF PWB • Bundle eject motor 2 - DF PWB	
2	Checking DF bundle exit motor 2	DF bundle exit sensor 2 does not operate properly.	Execute U241 [Finisher] > [Bundle Eject HP2]. If the DF Bundle eject HP Sensor 2 does not work properly,reinstall it and reconnect the connector. If it is not repaired, replace it.	
3	Checking DF bundle exit motor 2	DF bundle exit motor 2 does not operate properly.	Execute U240 [Motor] > [Bundle Up]. If the DF bundle eject motor 2 does not operate properly,reinstall it and reconnect the connector. If it is not repaired, replace it.	
4	Replacing the DF PWB	The DF PWB is faulty.	Replace the DF PWB.	

J7923: DF exit paddle motor jam

Even if the DF eject paddle motor is driven in the direction of fluctuation of the DF eject paddle HP sensor for a specified time, the change in the sensor is not detected. (100-sheet staple finisher)

Step	Check description	Assumed cause	Measures	Reference
1	Checking the connection	The connector is not connected properly,or the wire is faulty.	Clean the terminals of the wire connector below and reinsert them. If there is no continuity, replace the wire. • DF eject paddle HP sensor - DF PWB • DF eject paddle motor - DF PWB	
2	Checking the DF exit paddle HP sensor	The DF exit paddle HP sensor does not operate properly.	Execute U241 [Finisher] > [Eject Paddle HP]. If the DF eject paddle HP sensor does not work properly,reinstall it and reconnect the connector. If it is not repaired, replace it.	
3	Checking the DF exit paddle motor	The DF exit paddle motor does not operate properly.	Execute U240 [Motor] > [Tray Eject Paddle]. If the DF eject paddle motor does not work properly,reinstall it and reconnect the connector. If it is not repaired, replace it.	
4	Replacing the DF PWB	The DF PWB is faulty.	Replace the DF PWB.	

J7924: DF exit paper press motor jam

Even if the DF eject paper holder motor is driven in the direction of fluctuation of the DF eject paper holder sensor for a specified time, the change in the sensor is not detected. (100-sheet staple finisher)

Step	Check description	Assumed cause	Measures	Reference
1	Checking the connection	The connector is not connected properly,or the wire is faulty.	Clean the terminals of the wire connector below and reinsert them. If there is no continuity, replace the wire. • DF eject paper holding sensor - DF PWB • DF eject paper holding motor - DF PWB	
2	Checking the DF exit paper press sensor	The DF exit paper press sensor does not operate properly.	Execute U241 [Finisher] > [Press Paper HP]. If the DF eject paper retainer sensor does not work properly,reinstall it and reconnect the connector. If it is not repaired, replace it.	
3	Checking the DF exit paper press motor	The DF exit paper press motor does not operate properly.	Execute U240 [Motor] > [Press Paper]. If the DF eject paper retainer motor does not work properly,reinstall it and reconnect the connector. If it is not repaired, replace it.	
4	Replacing the DF PWB	The DF PWB is faulty.	Replace the DF PWB.	

J7925: DF exit support guide motor jam

DF eject support guide Even if the DF eject support guide HP sensor is driven in the direction of fluctuation for a specified time, the change in the sensor is not detected. (100-sheet staple finisher)

Step	Check description	Assumed cause	Measures	Reference
1	Checking the connection	The connector is not connected properly,or the wire is faulty.	Clean the terminals of the wire connector below and reinsert them. If there is no continuity, replace the wire. • DF eject support guide HP sensor - DF PWB • DF eject support guide motor - DF PWB	
2	Checking the DF exit support guide HP sensor	The DF exit support guide HP sensor does not operate properly.	Execute U241 [Finisher] > [Paper Guide HP]. DF Ejection Support Guide If the HP sensor does not work properly,reinstall it and reconnect the connector. If it is not repaired, replace it.	
3	Checking the DF exit support guide motor	The DF exit support guide motor does not operate properly.	Execute U240 [Motor] > [Eject Guide]. If the DF exhaust support guide motor does not work properly,reinstall it and reconnect the connector. If it is not repaired, replace it.	
4	Replacing the DF PWB	The DF PWB is faulty.	Replace the DF PWB.	

J7930: DF required paper interval time data JAM

The same paper ID was notified by the required paper interval time command. (4,000 sheets finisher / 100 sheets staple finisher)

Step	Check description	Assumed cause	Measures	Reference
1	Resetting the power	The engine software is not working properly.	Remove a piece of paper from each conveying section,turn off the power switch,and pull out the power plug. After 5 seconds,reconnect the power plug and turn on the power switch.	
2	Checking the connection	The finisher connector is not properly connected to the Main unit.	Reconnect the finisher connector to the Main unit.	
3	Firmware upgrade	The firmware does not properly activate.	Upgrade the firmware to the latest version.	
4	Replacing the DF PWB	The DF PWB is faulty.	Replace the DF PWB.	
5	Replacing the engine PWB	The engine PWB is faulty.	Replace the engine PWB.	

J7931/J7932/J7933: DF eject data JAM1

- J7931: Received the main unit ejection command before the print ready was turned on.
- J7932: A main unit ejection command was received while the print operation was not in progress or the stop operation was in progress.
- J7933: There is no paper ID at the time of receiving the main unit eject command.

Step	Check description	Assumed cause	Measures	Reference
1	Resetting the power	The engine software is not working properly.	Remove a piece of paper from each conveying section,turn off the power switch,and pull out the power plug. After 5 seconds,reconnect the power plug and turn on the power switch.	
2	Checking the connection	The finisher connector is not properly connected to the Main unit.	Reconnect the finisher connector to the Main unit.	
3	Firmware upgrade	The firmware does not properly activate.	Upgrade the firmware to the latest version.	
4	Replacing the DF PWB	The DF PWB is faulty.	Replace the DF PWB.	
5	Replacing the engine PWB	The engine PWB is faulty.	Replace the engine PWB.	

J7934/J7935: DF required paper interval time cancel data JAM

The paper ID does not exist when the required paper-to-paper time cancel command is received. Or, the paper is being conveyed. (4,000 sheets finisher / 100 sheets staple finisher)

Step	Check description	Assumed cause	Measures	Reference
1	Resetting the power	The engine software is not working properly.	Remove a piece of paper from each conveying section,turn off the power switch,and pull out the power plug. After 5 seconds,reconnect the power plug and turn on the power switch.	
2	Checking the connection	The finisher connector is not properly connected to the Main unit.	Reconnect the finisher connector to the Main unit.	
3	Firmware upgrade	The firmware does not properly activate.	Upgrade the firmware to the latest version.	
4	Replacing the DF PWB	The DF PWB is faulty.	Replace the DF PWB.	
5	Replacing the engine PWB	The engine PWB is faulty.	Replace the engine PWB.	

J9000: No original feed from the DP

The DP paper feed sensor does not turn on even if retry paper feed is performed. (Document feeder)

Step	Check description	Assumed cause	Measures	Reference
1	Checking the original	The leading edge of the original is folded.	Remove the folded original.	
2	Checking the original	The original curls downward or waves.	Correct or replace the original. If it is difficult to replace,switch the front end and the rear end of the original,and reset.	
3	Checking the original	The original out of specification is used.	Explain users to use the original within the specifications.	
4	Checking the original	Foreign objects adhere on the original.	Remove the original with the foreign objects.	
5	Checking the paper path	The original is caught up by a piece of paper.	If a piece of paper,the foreign objects are on the conveying path,or a burr in the parts such as the guide or the actuator,remove them.	
6	Checking the DP paper feed belt or DP paper feed roller (when the original is transported at an angle)	The conveying capacity of the DP paper feed belt or DP paper feed roller is not sufficient.	Clean the surface of the DP paper feed belt or DP paper feed roller. If it is worn out,replace it.	
7	Replacing the DP separation pad	The film on the DP separation pad is peeling off.	Replace the DP separation pad assembly (including film).	
8	Checking the actuator and the spring	The actuator does not operate properly.	Reattach the actuator and the spring of the DP feed sensor. If it does not operate correctly due to the deformation,etc.,repair or replace them.	
9	Checking the connection	The connector is not connected properly,or the wire is faulty.	Clean the terminal of the following wire connectors and reconnect the connectors. If there is no continuity, replace the wire. • DP feed sensor - DP PWB • DP feed motor - DP PWB	
10	Checking the DP feed sensor	The DP feed sensor does not operate correctly.	Execute U244 [Feed]. If the DP feed sensor does not operate correctly,reattach it and reconnect the connector. If not repaired, replace it.	
11	Checking the DP feed motor	The DP feed motor does not operate correctly.	Execute U243 [Feed Motor]. If the DP feed motor does not operate correctly,reattach it and reconnect the connector. If not repaired, replace it.	
12	Replacing the DP PWB	The DP PWB is faulty.	Replace the DP PWB.	

J9001: DP small size original jam

The DP timing sensor turned off immediately after the DP timing sensor was turned on. (Document feeder) (The following is for DP-7150 only)
The DP paper feed sensor or DP Regist sensor is turned off at the start of secondary paper feed when the DP regist sensor turns off, secondary paper feed original does not reach to the DP timing sensor.

Step	Check description	Assumed cause	Measures	Reference
1	Checking the original	The original out of specification is fed.	Explain users to use the original within the specifications.	
2	Checking actuators and springs (DP-7150)	The actuator does not operate properly.	If the actuator or spring for the DP Regist sensor is not operating properly due to deformation,etc., replace it.	
3	Checking the connection	The connector is not connected properly,or the wire is faulty.	Reconnect the wire connector below. If there is no continuity, replace the wire. • DP Regist sensor - DP PWB (DP-7150) • DP paper feed sensor - DP PWB (DP-7150) • DP timing sensor - DP PWB	
4	Checking the DP Regist sensor (DP-7150)	The DP registration sensor does not operate correctly.	Execute U244 [Regist]. If the DP registration sensor does not operate correctly,reattach it and reconnect the connector. If not repaired, replace it.	
5	Checking the DP paper feed sensor (DP-7150)	The DP feed sensor does not operate correctly.	Execute U244 [Feed]. If the DP feed sensor does not operate correctly, reattach it and reconnect the connector. If not repaired, replace it.	
6	Checking the DP timing sensor	DP timing sensor does not operate correctly.	Execute U244 [Timing]. If the DP timing sensor does not operate correctly,reattach it and reconnect the connector. If not repaired, replace it.	
7	Replacing the DP PWB	The DP PWB is faulty.	Replace the DP PWB.	

J9002: Paper jam detected when starting the paper conveying

At the start of conveying, the conveying system sensor that cannot be identified is ON.
Target: Document feeder
Remarks: The document feeder (DP-7150) displays J9002 when a DP feedshift motor error (C9180) is detected (up to the second time).

Step	Check description	Assumed cause	Measures	Reference
1	Specifying the sensor	(Specify the sensor which is turned on)	Specify the sensor that displays ON at U244. (Go to the next step.)	
2	Checking the original conveying path	There is a piece of paper remaining on paper conveying route to turn on the sensor.	If a piece of paper,the foreign objects are on the conveying path,or a burr in the parts such as the guide or the actuator,remove them.	
3	Checking the sensor	The sensor does not operate correctly.	Clean and reattach the sensor specified at U244,and reconnect the connector. If not repaired, replace it.	
4	Checking the connection	The connector is not connected properly,or the wire is faulty.	Clean the terminal of the following wire connectors and reconnect the connectors. If there is no continuity, replace the wire. • Faulty sensor defined at U244 - DP PWB	

J9004: DP registration sensor non-arrival jam during the original reversing

The DP Regist sensor does not turn on even after a specified time has passed from the start of reverse operation. (Document feeder: DP-7150)

Step	Check description	Assumed cause	Measures	Reference
1	Checking the original	The leading edge of the original is folded.	Remove the folded original.	
2	Checking the original	The original curls downward or waves.	Correct or replace the original. If it is difficult to replace,switch the front end and the rear end of the original,and reset.	
3	Checking the original	The original out of specification is used.	Explain users to use the original within the specifications.	
4	Checking the original	Foreign objects adhere on the original.	Remove the original with the foreign objects.	
5	Checking the original conveying path	The original is caught up by a piece of paper.	If a piece of paper,the foreign objects are on the conveying path,or a burr in the parts such as the guide or the actuator,remove them.	
6	Resetting the original width guide (when the original is transported diagonally)	The location of the original width guides and the original size are mismatched.	Align the original width guides to the original size.	
7	Checking the DP conveying roller (when the original is being transported diagonally)	The paper conveying performance of the DP conveying roller is insufficient.	Clean the DP conveying roller surface. If worn down,replace it.	
8	Check the DP feedshift guide (when the original is transported diagonally)	The original is hooked with the DP feed-shift guide.	Reattach the DP feed-shift guide. If there is a burr on the conveying surface of the DP branch guide,remove or replace it.	
9	Checking the connection (when the original is transported diagonally)	The connector is not connected properly,or the wire is faulty.	Clean the terminal of the following wire connectors and reconnect the connectors. If there is no continuity, replace the wire. • DP feed-shift motor - DP PWB	
10	Check the DP feedshift motor (when the original is being transported diagonally)	The DP feed-shift guide does not switch as the DP feed-shift motor does not operate correctly.	Reattach the DP feed-shift motor and reconnect the connector. If not repaired, replace it.	
11	Checking the DP reversing roller (when original conveying is delayed)	The paper conveying force of the DP reverse roller is insufficient.	Clean the surface of the DP reversing roller. If it is worn out,replace it.	
12	Checking the connection	The connector is not connected properly,or the wire is faulty.	Reconnect the wire connector below. If there is no continuity, replace the wire. • DP Regist sensor - DP PWB • DP reversing motor - DP PWB	
13	Checking the DP registration sensor	The DP registration sensor does not operate correctly.	Execute U244 [Regist]. If the DP registration sensor does not operate correctly,clean and reattach it,then reconnect the connector. If not repaired, replace it.	
14	Checking the DP reverse motor	The DP reverse motor does not operate correctly.	Execute U243 [Eject Motor]. If the DP reverse motor does not operate correctly,reattach it and reconnect the connector. If not repaired, replace it.	
15	Replacing the DP PWB	The DP PWB is faulty.	Replace the DP PWB.	

J9005: No original feed from the DP

The DP lift upper limit sensor does not turn on even after a specified time has passed when the DP lift plate is raised. (Document feeder)

Step	Check description	Assumed cause	Measures	Reference
1	Checking the original	The original is not set properly.	Insert the original all the way and align the original width guides to the original.	
2	Checking the original	The leading edge of the original is folded.	Remove the folded original.	
3	Checking the original	The original curls downward or waves.	Correct or replace the original. If it is difficult to replace,switch the front end and the rear end of the original,and reset.	
4	Checking the original	The original out of specification is used.	Explain users to use the original within the specifications.	
5	Checking the actuator	The actuator does not operate properly.	Depending on the original,if the actuator of the DP lift upper sensor does not turn on,reattach the actuator.	
6	Check the DP lift plate (when the DP lift plate does not rise)	The DP lift plate is not attached properly,or the fulcrum shaft of the DP lift plate is damaged.	Reattach the DP lift plate. If the fulcrum shaft is broken,replace the DP lift plate.	
7	Check connection (if DP lift plate does not rise)	The connector is not connected properly,or the wire is faulty.	Clean the terminal of the following wire connectors and reconnect the connectors. If there is no continuity, replace the wire. • DP lift motor - DP PWB • DP original sensor - DP PWB	
8	Check the DP lift motor (if the DP lift plate does not rise)	The DP lift motor does not operate properly.	Execute U243 [Lift Motor]. If the DP lift motor does not operate correctly,reattach it and reconnect the connector. If not repaired, replace it.	
9	Check the DP original sensor (when the DP lift plate does not rise)	The DP original sensor does not operate correctly.	Execute U244 [Set]. If the DP original sensor does not operate correctly,reattach it and reconnect the connector. If not repaired, replace it.	
10	Checking the connection	The connector is not connected properly,or the wire is faulty.	Clean the terminal of the following wire connectors and reconnect the connectors. If there is no continuity, replace the wire. • DP lift upper limit sensor - DP PWB	
11	Checking the DP lift upper limit sensor	The DP lift upper limit sensor does not operate correctly.	Execute U244 [Lift U-Limit]. If the DP lift upper limit sensor does not operate correctly,reattach it and reconnect the connector. If not repaired, replace it.	
12	Replacing the DP PWB	The DP PWB is faulty.	Replace the DP PWB.	

J9006: DP exit sensor non-arrival jam during the original reversing

The DP eject sensor does not turn on even after a specified time has passed from the start of reverse operation. (Document feeder: DP-7150)

Step	Check description	Assumed cause	Measures	Reference
1	Checking the original	The leading edge of the original is folded.	Remove the folded original.	
2	Checking the original	The original curls downward or waves.	Correct or replace the original. If it is difficult to replace,switch the front end and the rear end of the original,and reset.	
3	Checking the original	The original out of specification is used.	Explain users to use the original within the specifications.	
4	Checking the original	Foreign objects adhere on the original.	Remove the original with the foreign objects.	
5	Check the original conveying path (when the leading edge of the original is damaged)	The original is caught by the conveying guide or a piece of paper,etc.	If a piece of paper,the foreign objects are on the conveying path,or a burr in the parts such as the guide or the actuator,remove them. If the rib of the guide is damaged,replace it.	
6	Resetting the original width guide (when the original is transported diagonally)	The location of the original width guides and the original size are mismatched.	Align the original width guides to the original size.	
7	Checking the DP conveying roller (when the original is being transported diagonally)	The paper conveying performance of the DP conveying roller is insufficient.	Clean the DP conveying roller surface. If worn down,replace it.	
8	Check the DP feedshift guide (when the original is transported diagonally)	The original is hooked with the DP feed-shift guide.	Reattach the DP feed-shift guide. If the burrs are on the original conveying side of the DP feed-shift guide,remove them or replace the guide.	
9	Check the DP reversing roller and DP feedshift roller (when original conveying is delayed)	The conveying capability of the DP reverse roller or the DP feed-shift roller is not enough.	Clean the surface of the DP reversing roller and DP feedshift roller. If it is worn out,replace it.	
10	Checking the connection	The connector is not connected properly,or the wire is faulty.	Reconnect the wire connector below. If there is no continuity, replace the wire. • DP eject sensor - DP PWB • DP reversing motor - DP PWB • DP feedshift motor - DP PWB	
11	Checking the DP exit sensor	The DP exit sensor does not operate correctly.	Execute U244 [Eject]. If the DP exit sensor does not operate correctly,reattach it and reconnect the connector. If not repaired, replace it.	
12	Checking the DP reverse motor	The DP reverse motor does not operate correctly.	Execute U243 [Eject Motor]. If the DP reverse motor does not operate correctly,reattach it and reconnect the connector. If not repaired, replace it.	
13	Checking the DP feed-shift motor	The DP feed-shift motor does not operate correctly.	Reattach the DP feed-shift motor and reconnect the connector. If not repaired, replace it.	
14	Replacing the DP PWB	The DP PWB is faulty.	Replace the DP PWB.	

J9007: DP exit sensor stay jam during the original reversing

The DP eject sensor does not turn off even after a specified time has passed from the start of reverse operation. (Document feeder: DP-7150)

Step	Check description	Assumed cause	Measures	Reference
1	Checking the original	The leading edge of the original is folded.	Remove the folded original.	
2	Checking the original	The original curls downward or waves.	Correct or replace the original. If it is difficult to replace,switch the front end and the rear end of the original,and reset.	
3	Checking the original	The original out of specification is used.	Explain users to use the original within the specifications.	
4	Checking the original	Foreign objects adhere on the original.	Remove the original with the foreign objects.	
5	Checking the original conveying path	The original is caught up by a piece of paper.	If a piece of paper,the foreign objects are on the conveying path,or a burr in the parts such as the guide or the actuator,remove them.	
6	Resetting the original width guide (when the original is transported diagonally)	The location of the original width guides and the original size are mismatched.	Align the original width guides to the original size.	
7	Checking the DP conveying roller (when the original is being transported diagonally)	The paper conveying performance of the DP conveying roller is insufficient.	Clean the DP conveying roller surface. If worn down,replace it.	
8	Check the DP feedshift guide (when the original is transported diagonally)	The original is hooked with the DP feed-shift guide.	Reattach the DP feed-shift guide. If the burrs are on the original conveying side of the DP feed-shift guide,remove them or replace the guide.	
9	Check the DP reversing roller and DP feedshift roller (when original conveying is delayed)	The conveying capability of the DP reverse roller or the DP feed-shift roller is not enough.	Clean the surface of the DP reversing roller and DP feedshift roller. If it is worn out,replace it.	
10	Checking the connection	The connector is not connected properly,or the wire is faulty.	Reconnect the wire connector below. If there is no continuity, replace the wire. • DP eject sensor - DP PWB • DP reversing motor - DP PWB • DP feedshift motor - DP PWB	
11	Checking the DP exit sensor	The DP exit sensor does not operate correctly.	Execute U244 [Eject]. If the DP exit sensor does not operate correctly,reattach it and reconnect the connector. If not repaired, replace it.	
12	Checking the DP reverse motor	The DP reverse motor does not operate correctly.	Execute U243 [Eject Motor]. If the DP reverse motor does not operate correctly,reattach it and reconnect the connector. If not repaired, replace it.	
13	Checking the DP feed-shift motor	The DP feed-shift motor does not operate correctly.	Reattach the DP feed-shift motor and reconnect the connector. If not repaired, replace it.	
14	Replacing the DP PWB	The DP PWB is faulty.	Replace the DP PWB.	

J9009: DP original jam caused by the image scanning

While reading an image, the next document is on standby for secondary paper feed. (Document feeder: DP-7150)

Step	Check description	Assumed cause	Measures	Reference
1	Resetting the power	The controller does not activate properly.	Remove a piece of paper from the conveying section and check the sensors. Then,turn off the power switch and unplug the power cord. When 5s passes,reconnect the power cord and turn the power switch on.	
2	Firmware upgrade	The firmware does not properly activate.	Upgrade the firmware to the latest version.	
3	Checking the DP relay cable	The image data transmission processing failed due to the DP relay cable connection failure.	Reconnect the DP relay cable.	
4	Executing [Memory Diagnostics]	The memory in the main PWB is faulty.	Execute [Memory Diagnostics] in the System Menu.	

J9010: Document processor open detection

The opening of the document feeder was detected when conveying the original. (Document feeder)

Step	Check description	Assumed cause	Measures	Reference
1	Checking the DP	The document processor is not properly installed,or it is faulty.	Check if the document processor is securely closed,and reinstall it if necessary. Fix or replace the DP covers if it is deformed.	
2	Checking the connection	The connector is not connected properly,or the wire is faulty.	Clean the terminal of the following wire connectors and reconnect the connectors. If there is no continuity, replace the wire. • DP opening/closing sensor - DP PWB	
3	Checking the DP opening/ closing sensor	The DP opening/closing sensor does not operate properly.	Execute U244 [Open]. If the DP opening/ closing sensor does not operate correctly,reattach it and reconnect the connector. If not repaired, replace it.	
4	Replacing the DP PWB	The DP PWB is faulty.	Replace the DP PWB.	

J9011: DP top cover open detection

The opening of the DP top cover was detected when conveying the original. (Document feeder)

Step	Check description	Assumed cause	Measures	Reference
1	Checking the DP top cover	The DP top cover is faulty.	Check if the DP top cover is securely closed,and reattach it if necessary. Fix or replace it if it is deformed.	
2	Checking the connection	The connector is not connected properly,or the wire is faulty.	Clean the terminal of the following wire connectors and reconnect the connectors. If there is no continuity, replace the wire. • DP top cover switch - DP PWB	
3	Checking the DP top cover switch	The DP top cover switch does not operate correctly.	Execute U244 [Cover Open]. If the DP top cover switch does not operate correctly,reattach it and reconnect the connector. If not repaired, replace it.	
4	Replacing the DP PWB	The DP PWB is faulty.	Replace the DP PWB.	

J9020: Original skew jam

After the DP paper feed sensor is turned on, the DP double feed sensor does not turn on even after a specified time has passed. (Document feeder: DP-7170)

Step	Check description	Assumed cause	Measures	Reference
1	Checking the original	The leading edge of the original is folded.	Remove the folded original.	
2	Checking the original	The original curls downward or waves.	Correct or replace the original. If it is difficult to replace,switch the front end and the rear end of the original,and reset.	
3	Checking the original	The original out of specification is used.	Explain users to use the original within the specifications.	
4	Checking the original	The originals are stapled or foreign objects adhere on the original.	Remove the staple and foreign objects on the originals. If foreign objects on an original cannot removed enough,skip that original.	
5	Resetting the original width guide (when the original is transported diagonally)	The location of the original width guides and the original size are mismatched.	Align the original width guides to the original size.	
6	Checking the DP paper feed belt (when the original is being conveyed diagonally)	The paper conveying performance of the DP feed belt is not enough.	Clean the surface of the DP paper feed belt. If it is worn out,replace it.	
7	Checking the DP paper feed guide (when the original is being conveyed diagonally)	The original is hooked with the DP feed guide.	Reattach the DP feed guide. If the burrs are on the original conveying side of the DP feed guide,remove the burrs. If not repaired, replace the DP feed guide.	
8	Checking the connection	The connector is not connected properly,or the wire is faulty.	Reconnect the wire connector below. If there is no continuity, replace the wire. DP double feed sensor 1 - DP double feed sensor 2 • DP double feed sensor 2 - DP PWB	
9	Checking the DP multi feed sensors	The DP multi feed sensors do not operate properly.	Clean DP multi feed sensor 1 (emit) and 2 (receipt),then reattach the sensors and reconnect the connectors. If not repaired, replace the sensors.	
10	Replacing the DP PWB	The DP PWB is faulty.	Replace the DP PWB.	

J9030: Original multi feed jam

The ON of the DP double feed sensor was detected. (Document feeder: DP-7170)

Step	Check description	Assumed cause	Measures	Reference
1	Checking the original	Sticky originals are used.	Fan the originals enough,then set them.	
2	Checking the original	The original out of specification is used such as below. Overlaid original Multi-layer original like Japanese paper Cut and paste original	Explain users to use the original within the specifications.	
3	Executing U460	The sensor misdetects depending on the original variety in the low altitude environment.	Execute U460 [DP] > [Conveying Sensor] > [Execute] (Calibration).	
4	Checking the connection	The connector is not connected properly,or the wire is faulty.	Reconnect the wire connector below. If there is no continuity, replace the wire. • DP double feed sensor 1 - DP double feed sensor 2 • DP double feed sensor 2 - DP PWB	
5	Checking the DP double feed sensor 1	DP double feed sensor 1 (transmission) is not installed properly,or there is something wrong with it.	Clean the DP double feed sensor 1 (sending) and reinstall it. If it is not repaired, replace it.	
6	Checking the DP double feed sensor 2	DP double feed sensor 2 (reception) is not installed properly,or there is something wrong with it.	Clean the DP double feed sensor 2 (receiving) and reinstall it. If it is not repaired, replace it.	
7	Replacing the DP PWB	The DP PWB is faulty.	Replace the DP PWB.	

J9031: Double feed detection error JAM

When start conveying the original, the DP double feed sensor detected that there was paper. (Document feeder: DP-7170)

Step	Check description	Assumed cause	Measures	Reference
1	Checking the original conveying path	There is a original in the DP double feed sensor detection area.	Open the cover on the DP and remove the original.	
2	Checking the connection	The connector is not connected properly,or the wire is faulty.	Reconnect the wire connector below. If there is no continuity, replace the wire. • DP double feed sensor 1 - DP double feed sensor 2 • DP double feed sensor 2 - DP PWB	
3	Checking the DP double feed sensor 1	DP double feed sensor 1 (transmission) is not installed properly,or there is something wrong with it.	Clean the DP double feed sensor 1 (sending) and reinstall it. If it is not repaired, replace it.	
4	Checking the DP double feed sensor 2	DP double feed sensor 2 (reception) is not installed properly,or there is something wrong with it.	Clean the DP double feed sensor 2 (receiving) and reinstall it. If it is not repaired, replace it.	
5	Replacing the DP PWB	The DP PWB is faulty.	Replace the DP PWB.	

J9050: Original flip up detection error JAM

The DP flip-up sensor detected the paper from the start of conveying the original to the OFF detection of the DP original sensor. (Document feeder: DP-7170)

Step	Check description	Assumed cause	Measures	Reference
1	Checking the original	A large number of originals are set.	Please reduce the number of originals.	
2	Checking the original	A original with a large curl is set.	Correct the curl of the original. Or,change to a non-curled original.	
3	Relocating the original width guides	The original protrudes from the original width guide.	Align the original width guides to the original size.	
4	Checking the connection	The connector is not connected properly,or the wire is faulty.	Reconnect the wire connector below. If there is no continuity, replace the wire. • DP flip-up sensor (light receiving) - DP PWB • DP flip-up sensor (light emitting) - DP PWB	
5	Checking the DP flip-up sensor	The DP flip-up sensor is not installed properly,or there is something wrong with it.	Execute U244 [Flip up]. If the DP flip-up sensor is not working properly,clean and reinstall the DP flip-up sensor (light receiving) and the DP flip-up sensor (light emitting),and then reconnect the connector. If it is not repaired, replace it.	
6	Replacing the DP PWB	The DP PWB is faulty.	Replace the DP PWB.	

J9110: DP feed sensor multi-feeding jam

The DP paper feed sensor does not turn off even after a specified time has passed since the DP timing sensor was turned on. (Document feeder)

Step	Check description	Assumed cause	Measures	Reference
1	Checking the original	The leading edge of the original is folded.	Remove the folded original.	
2	Checking the original	The original curls downward or waves.	Correct or replace the original. If it is difficult to replace,switch the front end and the rear end of the original,and reset.	
3	Checking the original	The original out of specification is used.	Explain users to use the original within the specifications.	
4	Checking the original	Foreign objects adhere on the original.	Remove the original with the foreign objects.	
5	Checking the DP paper feed belt (when the original is being conveyed diagonally)	The paper conveying performance of the DP feed belt is not enough.	Clean the surface of the DP paper feed belt. If it is worn out,replace it.	
5	Checking the DP reversing roller (DP-7150)	The paper separation force of the DP reverse roller is insufficient.	Clean the surface of the DP reversing roller. If it is worn out,replace it.	
6	Checking the DP reversal guide (DP-7150)	The DP reversal guide is off.	Reinstall the DP reversing guide.	
8	Resetting the original width guide (when the original is transported diagonally)	The location of the original width guides and the original size are mismatched.	Align the original width guides to the original size.	
9	Checking the DP paper feed guide (when the original is being conveyed diagonally)	The original is hooked with the DP feed guide.	Reattach the DP feed guide. If the burrs are on the original conveying side of the DP feed guide,remove them or replace the DP feed guide.	
10	Checking the connection	The connector is not connected properly,or the wire is faulty.	Clean the terminal of the following wire connectors and reconnect the connectors. If there is no continuity, replace the wire. • DP feed sensor - DP PWB	
11	Checking the DP feed sensor	The DP feed sensor is dirty,is not properly attached,is not properly connected,or it is faulty.	Execute U244 [Feed]. If the DP paper feed sensor does not work properly,clean it,reinstall it,and reconnect the connector. If it is not repaired, replace it.	
12	Replacing the DP PWB	The DP PWB is faulty.	Replace the DP PWB.	

J9200: DP registration sensor non-arrival jam

The DP Regist sensor does not turn on even after a specified time has passed since the DP paper feed sensor was turned on. (Document feeder: DP-7150)

Step	Check description	Assumed cause	Measures	Reference
1	Checking the original	The leading edge of the original is folded.	Remove the folded original.	
2	Checking the original	The original curls downward or waves.	Correct or replace the original. If it is difficult to replace,switch the leading edge and the trailing edge of paper,and reset. Or,when scanning duplex,flip paper upside down and reset them.	
3	Checking the original	The original out of specification is used.	Explain users to use the original within the specifications.	
4	Checking the original	Foreign objects adhere on the original.	Remove the original with the foreign objects.	
5	Checking the original conveying path	The original is caught up by a piece of paper.	If a piece of paper,the foreign objects are on the conveying path,or a burr in the parts such as the guide or the actuator,remove them.	
6	Resetting the original width guide (when the original is transported diagonally)	The location of the original width guides and the original size are mismatched.	Align the original width guides to the original size.	
7	Checking the DP paper feed belt (when the original is being conveyed diagonally)	The paper conveying performance of the DP feed belt is not enough.	Clean the surface of the DP paper feed belt. If it is worn out,replace it.	
8	Check the DP transport guide (when the original is conveyed diagonally)	The original is hooked with the DP conveying guide.	Reattach the DP conveying guide. If there is a burr on the conveying surface of the DP conveying guide,remove or replace it.	
9	Checking the DP conveying roller (when the original conveying is delayed)	The paper conveying performance of the DP conveying roller is insufficient.	Clean the DP conveying roller surface. If worn down,replace it.	
10	Check the cover on the DP (when the original conveying is delayed)	The DP top cover is deformed.	Check if the DP top cover is securely closed. If it cannot be closed due to the deformation,replace it.	
11	Checking the connection	The connector is not connected properly,or the wire is faulty.	Clean the terminal of the following wire connectors and reconnect the connectors. If there is no continuity, replace the wire. • DP registration sensor - DP PWB • DP conveying motor - DP PWB	
12	Checking the DP registration sensor	The DP registration sensor does not operate correctly.	Execute U244 [Regist]. If the DP registration sensor does not operate correctly,reattach it and reconnect the connector. If not repaired, replace it.	
13	Checking the DP conveying motor	The DP conveying motor does not operate correctly.	Execute U243 [Conv Motor]. If the DP conveying motor does not operate correctly,reattach it and reconnect the connector. If not repaired, replace it.	
14	Replacing the DP PWB	The DP PWB is faulty.	Replace the DP PWB.	

J9210: DP registration sensor stay jam

The DP Regist sensor does not turn off even after a specified time has passed since the DP paper feed sensor was turned on. (Document feeder: DP-7150)

Step	Check description	Assumed cause	Measures	Reference
1	Checking the original	The leading edge of the original is folded.	Remove the folded original.	
2	Checking the original	The original curls downward or waves.	Correct or replace the original. If it is difficult to replace,switch the leading edge and the trailing edge of paper,and reset. Or,when scanning duplex,flip paper upside down and reset them.	
3	Checking the original	The original out of specification is used.	Explain users to use the original within the specifications.	
4	Checking the original	Foreign objects adhere on the original.	Remove the original with the foreign objects.	
5	Checking the original conveying path	The original is caught up by a piece of paper.	If a piece of paper,the foreign objects are on the conveying path,or a burr in the parts such as the guide or the actuator,remove them.	
6	Resetting the original width guide (when the original is transported diagonally)	The location of the original width guides and the original size are mismatched.	Align the original width guides to the original size.	
7	Checking the DP paper feed belt (when the original is being conveyed diagonally)	The paper conveying performance of the DP feed belt is not enough.	Clean the surface of the DP paper feed belt. If it is worn out,replace it.	
8	Check the DP transport guide (when the original is conveyed diagonally)	The original is hooked with the DP conveying guide.	Reattach the DP conveying guide. If there is a burr on the conveying surface of the DP conveying guide,remove or replace it.	
9	Checking the DP conveying roller (when the original conveying is delayed)	The paper conveying performance of the DP conveying roller is insufficient.	Clean the DP conveying roller surface. If worn down,replace it.	
10	Check the cover on the DP (when the original conveying is delayed)	The DP top cover is deformed.	Check if the DP top cover is securely closed. If it cannot be closed due to the deformation,replace it.	
11	Checking the connection	The connector is not connected properly,or the wire is faulty.	Clean the terminal of the following wire connectors and reconnect the connectors. If there is no continuity, replace the wire. • DP registration sensor - DP PWB • DP conveying motor - DP PWB	
12	Checking the DP registration sensor	The DP registration sensor does not operate correctly.	Execute U244 [Regist]. If the DP registration sensor does not operate correctly,reattach it and reconnect the connector. If not repaired, replace it.	
13	Checking the DP conveying motor	The DP conveying motor does not operate correctly.	Execute U243 [Conv Motor]. If the DP conveying motor does not operate correctly,reattach it and reconnect the connector. If not repaired, replace it.	
14	Replacing the DP PWB	The DP PWB is faulty.	Replace the DP PWB.	

J9300: DP backside timing sensor non-arrival jam

The DP backside timing sensor does not turn on even after a specified time has passed since the DP paper feed sensor was turned on. (Document feeder: DP-7160,DP-7170)

Step	Check description	Assumed cause	Measures	Reference
1	Checking the original	The leading edge of the original is folded.	Remove the folded original.	
2	Checking the original	The original curls downward or waves.	Correct or replace the original. If it is difficult to replace,switch the leading edge and the trailing edge of paper,and reset. Or,when scanning duplex,flip paper upside down and reset them.	
3	Checking the original	The original out of specification is used.	Explain users to use the original within the specifications.	
4	Checking the original	Foreign objects adhere on the original.	Remove the original with the foreign objects.	
5	Checking the original conveying path	The original is caught up by a piece of paper.	If a piece of paper,the foreign objects are on the conveying path,or a burr in the parts such as the guide or the actuator,remove them.	
6	Resetting the original width guide (when the original is transported diagonally)	The location of the original width guides and the original size are mismatched.	Align the original width guides to the original size.	
7	Checking the DP paper feed belt (when the original is being conveyed diagonally)	The paper conveying performance of the DP feed belt is not enough.	Clean the surface of the DP paper feed belt. If it is worn out,replace it.	
8	Check the DP transport guide (when the original is conveyed diagonally)	The original is hooked with the DP conveying guide.	Reattach the DP conveying guide. If there is a burr on the conveying surface of the DP conveying guide,remove or replace it.	
9	Checking the DP conveying roller (when the original conveying is delayed)	The paper conveying performance of the DP conveying roller is insufficient.	Clean the DP conveying roller surface. If worn down,replace it.	
10	Check the cover on the DP (when the original conveying is delayed)	The DP top cover is deformed.	Check if the DP top cover is securely closed. If it cannot be closed due to the deformation,replace it.	
11	Checking the connection	The connector is not connected properly,or the wire is faulty.	Reconnect the wire connector below. If there is no continuity, replace the wire. • DP backside timing sensor - DP SHD PWB • DPSHD PWB - DP PWB • DP conveying motor - DP PWB	
12	Checking the DP backside timing sensor	The DP backside timing sensor does not operate correctly.	Execute U244 [CIS Head]. If the DP backside timing sensor does not operate correctly,reattach it and reconnect the connector. If not repaired, replace it.	
13	Checking the DP conveying motor	The DP conveying motor does not operate correctly.	Execute U243 [Conv Motor]. If the DP conveying motor does not operate correctly,reattach it and reconnect the connector. If not repaired, replace it.	
14	Replacing the DPSHD PWB	The DPSHD PWB is faulty.	Replace the DPSHD PWB.	
15	Replacing the DP PWB	The DP PWB is faulty.	Replace the DP PWB.	

J9310: DP backside timing sensor stay jam

The DP backside timing sensor does not turn off even after a specified time has passed since the DP paper feed sensor was turned off. (Document feeder: DP-7160,DP-7170)

Step	Check description	Assumed cause	Measures	Reference
1	Checking the original	The leading edge of the original is folded.	Remove the folded original.	
2	Checking the original	The original curls downward or waves.	Correct or replace the original. If it is difficult to replace,switch the leading edge and the trailing edge of paper,and reset. Or,when scanning duplex,flip paper upside down and reset them.	
3	Checking the original	The original out of specification is used.	Explain users to use the original within the specifications.	
4	Checking the original	Foreign objects adhere on the original.	Remove the original with the foreign objects.	
5	Checking the original conveying path	The original is caught up by a piece of paper.	If a piece of paper,the foreign objects are on the conveying path,or a burr in the parts such as the guide or the actuator,remove them.	
6	Resetting the original width guide (when the original is transported diagonally)	The location of the original width guides and the original size are mismatched.	Align the original width guides to the original size.	
7	Checking the DP paper feed belt (when the original is being conveyed diagonally)	The paper conveying performance of the DP feed belt is not enough.	Clean the surface of the DP paper feed belt. If it is worn out,replace it.	
8	Check the DP transport guide (when the original is conveyed diagonally)	The original is hooked with the DP conveying guide.	Reattach the DP conveying guide. If there is a burr on the conveying surface of the DP conveying guide,remove or replace it.	
9	Checking the DP conveying roller (when the original conveying is delayed)	The paper conveying performance of the DP conveying roller is insufficient.	Clean the DP conveying roller surface. If worn down,replace it.	
10	Check the cover on the DP (when the original conveying is delayed)	The DP top cover is deformed.	Check if the DP top cover is securely closed. If it cannot be closed due to the deformation,replace it.	
11	Checking the connection	The connector is not connected properly,or the wire is faulty.	Reconnect the wire connector below. If there is no continuity, replace the wire. • DP backside timing sensor - DP SHD PWB • DPSHD PWB - DP PWB • DP conveying motor - DP PWB	
12	Checking the DP backside timing sensor	The DP backside timing sensor does not operate correctly.	Execute U244 [CIS Head]. If the DP backside timing sensor does not operate correctly,reattach it and reconnect the connector. If not repaired, replace it.	
13	Checking the DP conveying motor	The DP conveying motor does not operate correctly.	Execute U243 [Conv Motor]. If the DP conveying motor does not operate correctly,reattach it and reconnect the connector. If not repaired, replace it.	
14	Replacing the DPSHD PWB	The DPSHD PWB is faulty.	Replace the DPSHD PWB.	
15	Replacing the DP PWB	The DP PWB is faulty.	Replace the DP PWB.	

J9400: DP timing sensor non-arrival jam

The DP timing sensor does not turn on even after a specified time has passed since the DP paper feed sensor or DP Regist sensor was turned on. (Document feeder)

Step	Check description	Assumed cause	Measures	Reference
1	Checking the original	The leading edge of the original is folded.	Remove the folded original.	
2	Checking the original	The original curls downward or waves.	Correct or replace the original. If it is difficult to replace,switch the leading edge and the trailing edge of paper,and reset. Or,when scanning duplex,flip paper upside down and reset them.	
3	Checking the original	The original out of specification is used.	Explain users to use the original within the specifications.	
4	Checking the original	Foreign objects adhere on the original.	Remove the original with the foreign objects.	
5	Checking the original conveying path	The original is caught up by a piece of paper.	If a piece of paper,the foreign objects are on the conveying path,or a burr in the parts such as the guide or the actuator,remove them.	
6	Resetting the original width guide (when the original is transported diagonally)	The location of the original width guides and the original size are mismatched.	Align the original width guides to the original size.	
7	Checking the DP paper feed belt or DP paper feed roller (when the original is transported at an angle)	The conveying capacity of the DP paper feed belt or DP paper feed roller is not sufficient.	Clean the surface of the DP paper feed belt or DP paper feed roller. If it is worn out,replace it.	
8	Check the DP transport guide (when the original is conveyed diagonally)	The original is hooked with the DP conveying guide.	Reattach the DP conveying guide. If there is a burr on the conveying surface of the DP conveying guide,remove or replace it.	
9	Checking the DP conveying roller (when the original conveying is delayed)	The paper conveying performance of the DP conveying roller is insufficient.	Clean the DP conveying roller surface. If worn down,replace it.	
10	Check the cover on the DP (when the original conveying is delayed)	The DP top cover is deformed.	Check if the DP top cover is securely closed. If it cannot be closed due to the deformation,replace it.	
11	Checking the connection	The connector is not connected properly,or the wire is faulty.	Clean the terminal of the following wire connectors and reconnect the connectors. If there is no continuity, replace the wire. • DP timing sensor - DP PWB • DP conveying motor - DP PWB	
12	Checking the DP timing sensor	DP timing sensor does not operate correctly.	Execute U244 [Timing]. If the DP timing sensor does not operate correctly,reattach it and reconnect the connector. If not repaired, replace it.	
13	Checking the DP conveying motor	The DP conveying motor does not operate correctly.	Execute U243 [Conv Motor]. If the DP conveying motor does not operate correctly,reattach it and reconnect the connector. If not repaired, replace it.	
14	Replacing the DP PWB	The DP PWB is faulty.	Replace the DP PWB.	

J9410: DP timing sensor stay jam

The DP timing sensor does not turn off even after a specified time has passed since the DP paper feed sensor or DP Regist sensor was turned off. (Document feeder)

Step	Check description	Assumed cause	Measures	Reference
1	Checking the original	The leading edge of the original is folded.	Remove the folded original.	
2	Checking the original	The original curls downward or waves.	Correct or replace the original. If it is difficult to replace,switch the leading edge and the trailing edge of paper,and reset. Or,when scanning duplex,flip paper upside down and reset them.	
3	Checking the original	The original out of specification is used.	Explain users to use the original within the specifications.	
4	Checking the original	Foreign objects adhere on the original.	Remove the original with the foreign objects.	
5	Checking the original conveying path	The original is caught up by a piece of paper.	If a piece of paper,the foreign objects are on the conveying path,or a burr in the parts such as the guide or the actuator,remove them.	
6	Resetting the original width guide (when the original is transported diagonally)	The location of the original width guides and the original size are mismatched.	Align the original width guides to the original size.	
6	Checking the DP paper feed belt or DP paper feed roller (when the original is transported at an angle)	The conveying capacity of the DP paper feed belt or DP paper feed roller is not sufficient.	Clean the surface of the DP paper feed belt or DP paper feed roller. If it is worn out,replace it.	
8	Check the DP transport guide (when the original is conveyed diagonally)	The original is hooked with the DP conveying guide.	Reattach the DP conveying guide. If there is a burr on the conveying surface of the DP conveying guide,remove or replace it.	
9	Checking the DP conveying roller (when the original conveying is delayed)	The paper conveying performance of the DP conveying roller is insufficient.	Clean the DP conveying roller surface. If worn down,replace it.	
10	Check the cover on the DP (when the original conveying is delayed)	The DP top cover is deformed.	Check if the DP top cover is securely closed. If it cannot be closed due to the deformation,replace it.	
11	Checking the connection	The connector is not connected properly,or the wire is faulty.	Clean the terminal of the following wire connectors and reconnect the connectors. If there is no continuity, replace the wire. • DP timing sensor - DP PWB • DP conveying motor - DP PWB	
12	Checking the DP timing sensor	DP timing sensor does not operate correctly.	Execute U244 [Timing]. If the DP timing sensor does not operate correctly,reattach it and reconnect the connector. If not repaired, replace it.	
13	Checking the DP conveying motor	The DP conveying motor does not operate correctly.	Execute U243 [Conv Motor]. If the DP conveying motor does not operate correctly,reattach it and reconnect the connector. If not repaired, replace it.	
14	Replacing the DP PWB	The DP PWB is faulty.	Replace the DP PWB.	

J9600: DP exit sensor non-arrival jam

The DP eject sensor does not turn on even after a specified time has passed since the DP timing sensor was turned on. (Document feeder)

Step	Check description	Assumed cause	Measures	Reference
1	Checking the original	The leading edge of the original is folded.	Remove the folded original.	
2	Checking the original	The original curls downward or waves.	Correct or replace the original. If it is difficult to replace,switch the leading edge and the trailing edge of paper,and reset. Or,when scanning duplex,flip paper upside down and reset them.	
3	Checking the original	The original out of specification is used.	Explain users to use the original within the specifications.	
4	Checking the original	Foreign objects adhere on the original.	Remove the original with the foreign objects.	
5	Checking the original conveying path	The original is caught up by a piece of paper.	If a piece of paper,the foreign objects are on the conveying path,or a burr in the parts such as the guide or the actuator,remove them.	
6	Check the DP transport guide (when the original is conveyed diagonally)	The original is hooked with the DP conveying guide.	Reattach the DP conveying guide. If there is a burr on the conveying surface of the DP conveying guide,remove or replace it.	
7	Checking the DP conveying roller (when the original conveying is delayed)	The paper conveying performance of the DP conveying roller is insufficient.	Clean the DP conveying roller surface. If worn down,replace it.	
8	Adjusting the height of the DP hinge (when the original conveying is delayed due to the simultaneous reading of both sides DP)	The height of the DP hinges is improper.	Adjust the height of the DP hinges.	
9	Checking the opening / closing operation of the document feeder (when original conveying is delayed)	The opening/closing operation of the document processor is faulty.	Check if the document processor is securely closed. If it cannot be closed due to the DP frame deformation,replace the document processor.	
10	Checking the connection	The connector is not connected properly,or the wire is faulty.	Clean the terminal of the following wire connectors and reconnect the connectors. If there is no continuity, replace the wire. • DP exit sensor - DP PWB • DP conveying motor - DP PWB	
11	Checking the DP exit sensor	The DP exit sensor does not operate correctly.	Execute U244 [Eject]. If the DP exit sensor does not operate correctly,reattach it and reconnect the connector. If not repaired, replace it.	
12	Checking the DP conveying motor	The DP conveying motor does not operate correctly.	Execute U243 [Conv Motor]. If the DP conveying motor does not operate correctly,reattach it and reconnect the connector. If not repaired, replace it.	
13	Replacing the DP PWB	The DP PWB is faulty.	Replace the DP PWB.	

J9610: DP exit sensor stay jam

The DP eject sensor does not turn off even after a specified time has passed since the DP timing sensor was turned off. (Document feeder)

Step	Check description	Assumed cause	Measures	Reference
1	Checking the original	The leading edge of the original is folded.	Remove the folded original.	
2	Checking the original	The original curls downward or waves.	Correct or replace the original. If it is difficult to replace,switch the leading edge and the trailing edge of paper,and reset. Or,when scanning duplex,flip paper upside down and reset them.	
3	Checking the original	The original out of specification is used.	Explain users to use the original within the specifications.	
4	Checking the original	Foreign objects adhere on the original.	Remove the original with the foreign objects.	
5	Checking the original conveying path	The original is caught up by a piece of paper.	If a piece of paper,the foreign objects are on the conveying path,or a burr in the parts such as the guide or the actuator,remove them.	
6	Check the DP transport guide (when the original is conveyed diagonally)	The original is hooked with the DP conveying guide.	Reattach the DP conveying guide. If there is a burr on the conveying surface of the DP conveying guide,remove or replace it.	
7	Checking the DP ejection roller (when original conveying is delayed)	The paper conveying force of the DP exit roller is insufficient.	Clean the surface of the DP eject roller. If it is worn out,replace it.	
8	Adjusting the height of the DP hinge (when the original conveying is delayed due to the simultaneous reading of both sides DP)	The height of the DP hinges is improper.	Adjust the height of the DP hinges.	
9	Checking the opening / closing operation of the document feeder (when original conveying is delayed)	The opening/closing operation of the document processor is faulty.	Check if the document processor is securely closed. If it cannot be closed due to the DP frame deformation,replace the document processor.	
10	Checking the connection	The connector is not connected properly,or the wire is faulty.	Clean the terminal of the following wire connectors and reconnect the connectors. If there is no continuity, replace the wire. • DP exit sensor - DP PWB • DP conveying motor - DP PWB	
11	Checking the DP exit sensor	The DP exit sensor does not operate correctly.	Execute U244 [Eject]. If the DP exit sensor does not operate correctly,reattach it and reconnect the connector. If not repaired, replace it.	
12	Checking the DP conveying motor	The DP conveying motor does not operate correctly.	Execute U243 [Conv Motor]. If the DP conveying motor does not operate correctly,reattach it and reconnect the connector. If not repaired, replace it.	
13	Replacing the DP PWB	The DP PWB is faulty.	Replace the DP PWB.	

JA000: Entry failure JAM

The IS carry-in sensor was turned on before the paper was ejected from the main unit. (Inserter)

Step	Check description	Assumed cause	Measures	Reference
1	Checking the paper conveying parts	Rollers,guides,etc. are not installed properly. Or there is dirt,deformation,or wear.	Clean ,repair and reattach the conveying parts such as the roller, guide, etc. If not repaired, replace it.	
2	Checking the connection	The connector is not connected properly,or the wire is faulty.	Clean the terminals of the wire connector below and reinsert them. If there is no continuity, replace the wire. • IS carry-in sensor - IS PWB	
3	Checking the IS carry-in sensor	The IS carry-in sensor is not operating properly.	Execute U241 [Inserter] > [HP]. If the IS carry-in sensor does not work properly,reinstall it and reconnect the connector. If it is not repaired, replace it.	
4	IS PWB replacement	The IS PWB is faulty.	Replace the IS PWB.	

JA010: IS front cover open detection

The opening of the IS front cover was detected during the inserter operation. (Inserter)

Step	Check description	Assumed cause	Measures	Reference
1	Checking the IS front cover	IS front cover is not fitted.	Make sure that the IS front cover closes securely,and then reinstall it if necessary. If the IS front cover is deformed,repair or replace it.	
2	Checking the IS front cover switch	The IS front cover switch is not operating properly.	Execute U241 [Inserter] > [Front Cover]. If the IS front cover switch does not work properly,reinstall it and reconnect the connector. If it is not repaired, replace it.	

JA020: IS right cover open detection

The opening of the IS right cover was detected while the inserter was operating. (Inserter)

Step	Check description	Assumed cause	Measures	Reference
1	Checking the IS right cover	IS right cover is not fitted.	Make sure that the IS right cover closes securely,and then reinstall it if necessary. If the IS right cover is deformed,repair or replace it.	
2	Checking the IS right cover switch	The IS right cover switch is not operating properly.	Execute U241 [Inserter] > [Vertical Cover]. If the IS right cover switch does not work properly,reinstall it and reconnect the connector. If it is not repaired, replace it.	

JA100: IS entry sensor non-arrival JAM

The IS carry-in sensor does not turn on even after a specified time has passed after the main body has been output. (Inserter)

Step	Check description	Assumed cause	Measures	Reference
1	Checking the paper conveying parts	Rollers,guides,etc. are not installed properly. Or there is dirt,deformation,or wear.	Clean ,repair and reattach the conveying parts such as the roller,guide,etc. If not repaired, replace it.	
2	Checking the connection	The connector is not connected properly,or the wire is faulty.	Clean the terminals of the wire connector below and reinsert them. If there is no continuity, replace the wire. • IS carry-in sensor - IS PWB	
3	Checking the IS carry-in sensor	The IS carry-in sensor is not operating properly.	Execute U241 [Inserter] > [HP]. If the IS carry-in sensor does not work properly,reinstall it and reconnect the connector. If it is not repaired, replace it.	
4	IS PWB replacement	The IS PWB is faulty.	Replace the IS PWB.	

JA102: IS eject sensor non-arrival JAM1

After the IS carry-in sensor is turned on, the IS eject sensor does not turn on even after a specified time has passed. (Inserter)

Step	Check description	Assumed cause	Measures	Reference
1	Checking the paper conveying parts	Rollers,guides,etc. are not installed properly. Or there is dirt,deformation,or wear.	Clean ,repair and reattach the conveying parts such as the roller,guide,etc. If not repaired, replace it.	
2	Checking the connection	The connector is not connected properly,or the wire is faulty.	Clean the terminals of the wire connector below and reinsert them. If there is no continuity, replace the wire. • IS carry-in sensor - IS PWB • IS eject sensor - IS PWB • IS horizontal conveying motor - IS PWB	
3	Checking the IS carry-in sensor	The IS carry-in sensor is not operating properly.	Execute U241 [Inserter] > [HP]. If the IS carry-in sensor does not work properly,reinstall it and reconnect the connector. If it is not repaired, replace it.	
4	Checking the IS eject sensor	The IS eject sensor is not working properly.	Execute U241 [Inserter] > [Eject]. If the IS eject sensor does not work properly,reinstall it and reconnect the connector. If it is not repaired, replace it.	
5	Checking the IS horizontal conveying motor	The IS horizontal conveying motor is not operating properly.	U240 Execute [Inserter] > [Horizontal Feed H] or [Horizontal Feed L]. If the IS horizontal conveying motor does not work properly,reinstall it and reconnect the connector. If it is not repaired, replace it.	
6	IS PWB replacement	The IS PWB is faulty.	Replace the IS PWB.	

JA103: IS eject sensor non-arrival JAM2

The IS eject sensor does not turn on even after a specified time has passed after the IS horizontal conveying motor is driven. (Inserter)

Step	Check description	Assumed cause	Measures	Reference
1	Checking the paper conveying parts	Rollers,guides,etc. are not installed properly. Or there is dirt,deformation,or wear.	Clean ,repair and reattach the conveying parts such as the roller, guide, etc. If not repaired, replace it.	
2	Checking the connection	The connector is not connected properly,or the wire is faulty.	Clean the terminals of the wire connector below and reinsert them. If there is no continuity, replace the wire. • IS eject sensor - IS PWB • IS horizontal conveying motor - IS PWB	
3	Checking the IS eject sensor	The IS carry-out sensor is not operating properly.	Execute U241 [Inserter] > [Eject]. If the IS eject sensor does not work properly,reinstall it and reconnect the connector. If it is not repaired, replace it.	
4	Checking the IS horizontal conveying motor	The IS horizontal conveying motor is not operating properly.	U240 Execute [Inserter] > [Horizontal Feed H] or [Horizontal Feed L]. If the IS horizontal conveying motor does not work properly,reinstall it and reconnect the connector. If it is not repaired, replace it.	
5	IS PWB replacement	The IS PWB is faulty.	Replace the IS PWB.	

JA110: IS entry sensor stay JAM

After the IS carry-in sensor is turned on, the IS carry-in sensor does not turn off even after a specified time has passed. (Inserter)

Step	Check description	Assumed cause	Measures	Reference
1	Checking the paper conveying parts	Rollers,guides,etc. are not installed properly. Or there is dirt,deformation,or wear.	Clean ,repair and reattach the conveying parts such as the roller,guide,etc. If not repaired, replace it.	
2	Checking the connection	The connector is not connected properly,or the wire is faulty.	Clean the terminals of the wire connector below and reinsert them. If there is no continuity, replace the wire. • IS carry-in sensor - IS PWB • IS horizontal conveying motor - IS PWB	
3	Checking the IS carry-in sensor	The IS carry-in sensor is not operating properly.	Execute U241 [Inserter] > [HP]. If the IS carry-in sensor does not work properly,reinstall it and reconnect the connector. If it is not repaired, replace it.	
4	Checking the IS horizontal conveying motor	The IS horizontal conveying motor is not operating properly.	U240 Execute [Inserter] > [Horizontal Feed H] or [Horizontal Feed L]. If the IS horizontal conveying motor does not work properly,reinstall it and reconnect the connector. If it is not repaired, replace it.	
5	IS PWB replacement	The IS PWB is faulty.	Replace the IS PWB.	

JA112: IS eject sensor stay JAM1

After the IS carry-in sensor is turned off, the IS eject sensor does not turn off even after a specified time has passed. (Inserter)

Step	Check description	Assumed cause	Measures	Reference
1	Checking the paper conveying parts	Rollers,guides,etc. are not installed properly. Or there is dirt,deformation,or wear.	Clean ,repair and reattach the conveying parts such as the roller,guide,etc. If not repaired, replace it.	
2	Checking the connection	The connector is not connected properly,or the wire is faulty.	Clean the terminals of the wire connector below and reinsert them. If there is no continuity, replace the wire. • IS eject sensor - IS PWB • IS horizontal conveying motor - IS PWB	
3	Checking the IS eject sensor	The IS eject sensor is not working properly.	Execute U241 [Inserter] > [Eject]. If the IS eject sensor does not work properly,reinstall it and reconnect the connector. If it is not repaired, replace it.	
4	Checking the IS horizontal conveying motor	The IS horizontal conveying motor is not operating properly.	U240 Execute [Inserter] > [Horizontal Feed H] or [Horizontal Feed L]. If the IS horizontal conveying motor does not work properly,reinstall it and reconnect the connector. If it is not repaired, replace it.	
5	IS PWB replacement	The IS PWB is faulty.	Replace the IS PWB.	

JA113: IS eject sensor stay JAM2

After the IS merging and conveying sensor is turned off, the IS eject sensor does not turn off even after a specified time has passed. (Inserter)

Step	Check description	Assumed cause	Measures	Reference
1	Checking the paper conveying parts	Rollers,guides,etc. are not installed properly. Or there is dirt,deformation,or wear.	Clean ,repair and reattach the conveying parts such as the roller,guide,etc. If not repaired, replace it.	
2	Checking the connection	The connector is not connected properly,or the wire is faulty.	Clean the terminals of the wire connector below and reinsert them. If there is no continuity, replace the wire. • IS merge conveying sensor - IS PWB • IS eject sensor - IS PWB • IS merge conveying motor - IS PWB	
3	Checking the IS merge conveying sensor	The IS merge conveying sensor is not operating properly.	Execute U241 [Inserter] > [Confluence]. If the IS merge conveying sensor does not work properly,reinstall it and reconnect the connector. If it is not repaired, replace it.	
4	Checking the IS eject sensor	The IS eject sensor is not working properly.	Execute U241 [Inserter] > [Eject]. If the IS eject sensor does not work properly,reinstall it and reconnect the connector. If it is not repaired, replace it.	
5	Checking the IS merge conveying motor	The IS merge conveying motor is not operating properly.	Execute U240 [Inserter] > [Vertical Feed L]. If the IS merge conveying motor does not work properly,reinstall it and reconnect the connector. If it is not repaired, replace it.	
6	IS PWB replacement	The IS PWB is faulty.	Replace the IS PWB.	

JA300: IS upper tray regist sensor non-arrival JAM

After the IS upper tray paper feed sensor is turned on, the IS upper tray Regist sensor does not turn ON even after a specified time has passed. (Inserter)

Step	Check description	Assumed cause	Measures	Reference
1	Checking the paper conveying parts	Rollers,guides,etc. are not installed properly. Or there is dirt,deformation,or wear.	Clean ,repair and reattach the conveying parts such as the roller,guide,etc. If not repaired, replace it.	
2	Checking the connection	The connector is not connected properly,or the wire is faulty.	Clean the terminals of the wire connector below and reinsert them. If there is no continuity, replace the wire. • IS upper tray paper feed sensor - IS PWB • IS upper tray Regist sensor - IS PWB • IS upper tray paper feed motor - IS PWB	
3	Check the tray feed sensor on IS	The IS upper tray paper feed sensor is not operating properly.	Execute U241 [Inserter] > [Upper Tray Feed]. If the IS upper tray paper feed sensor does not work properly,reinstall it and reconnect the connector. If it is not repaired, replace it.	
4	Checking the ISA upper tray regist sensor	The IS upper tray regist sensor is not working properly.	Execute U241 [Inserter] > [Upper Tray Regist]. If the IS upper tray regist sensor does not work properly,reinstall it and reconnect the connector. If it is not repaired, replace it.	
5	Check the IS top tray paper feed motor	The IS upper tray feed motor is not operating properly.	Execute U240 [Inserter] > [Upper Tray Feed]. If the IS upper tray paper feed motor does not work properly,reinstall it and reconnect the connector. If it is not repaired, replace it.	
6	IS PWB replacement	The IS PWB is faulty.	Replace the IS PWB.	

JA301: IS lower tray regist sensor non-arrival JAM

After the IS lower tray paper feed sensor is turned on, the IS lower tray Regist sensor does not turn on even after a specified time has passed. (Inserter)

Step	Check description	Assumed cause	Measures	Reference
1	Checking the paper conveying parts	Rollers,guides,etc. are not installed properly. Or there is dirt,deformation,or wear.	Clean ,repair and reattach the conveying parts such as the roller,guide,etc. If not repaired, replace it.	
2	Checking the connection	The connector is not connected properly,or the wire is faulty.	Clean the terminals of the wire connector below and reinsert them. If there is no continuity, replace the wire. • IS lower tray paper feed sensor-IS PWB • IS lower tray Regist sensor-IS PWB • IS lower tray paper feed motor-IS PWB	
3	Checking the IS lower tray paper feed sensor	The IS lower tray paper feed sensor is not operating properly.	Execute U241 [Inserter] > [Lower Tray Feed]. If the IS lower tray paper feed sensor does not work properly,reinstall it and reconnect the connector. If it is not repaired, replace it.	
4	Checking the IS lower tray Regist sensor	The IS lower tray regist sensor is not operating properly.	Execute U241 [Inserter] > [Lower Tray Regist]. If the IS lower tray Regist sensor does not work properly,reinstall it and reconnect the connector. If it is not repaired, replace it.	
5	Checking the IS lower tray paper feed motor	The IS lower tray paper feeder is not operating properly.	Execute U240 [Inserter] > [Lower Tray Feed]. If the IS lower tray paper feed motor does not work properly,reinstall it and reconnect the connector. If it is not repaired, replace it.	
6	IS PWB replacement	The IS PWB is faulty.	Replace the IS PWB.	

JA303: IS merge conveying sensor non-arrival JAM

After the IS lower tray Regist sensor is turned on, the IS merging and conveying sensor does not turn on even after a specified time has passed. (Inserter)

Step	Check description	Assumed cause	Measures	Reference
1	Checking the paper conveying parts	Rollers,guides,etc. are not installed properly. Or there is dirt,deformation,or wear.	Clean ,repair and reattach the conveying parts such as the roller,guide,etc. If not repaired, replace it.	
2	Checking the connection	The connector is not connected properly,or the wire is faulty.	Clean the terminals of the wire connector below and reinsert them. If there is no continuity, replace the wire. • IS lower tray Regist sensor - IS PWB • IS merge conveying sensor - IS PWB • S lower tray Regist motor - IS PWB	
3	Checking the IS lower tray Regist sensor	The IS lower tray regist sensor is not operating properly.	Execute U241 [Inserter] > [Lower Tray Regist]. If the IS lower tray Regist sensor does not work properly,reinstall it and reconnect the connector. If it is not repaired, replace it.	
4	Checking the IS merge conveying sensor	The IS merge conveying sensor is not operating properly.	Execute U241 [Inserter] > [Confluence]. If the IS merge conveying sensor does not work properly,reinstall it and reconnect the connector. If it is not repaired, replace it.	
5	Checking the IS lower tray Regist motor	The IS lower tray Regist motor is not operating properly.	Execute U240 [Inserter] > [Lower Tray Regist]. If the IS lower tray Regist motor does not work properly,reinstall it and reconnect the connector. If it is not repaired, replace it.	
6	IS PWB replacement	The IS PWB is faulty.	Replace the IS PWB.	

JA304: IS lower tray regist sensor non-arrival JAM2

After the IS upper tray Regist sensor is turned on, the IS lower tray Regist sensor does not turn on even after a specified time has passed. (Inserter)

Step	Check description	Assumed cause	Measures	Reference
1	Checking the paper conveying parts	Rollers,guides,etc. are not installed properly. Or there is dirt,deformation,or wear.	Clean ,repair and reattach the conveying parts such as the roller,guide,etc. If not repaired, replace it.	
2	Checking the connection	The connector is not connected properly,or the wire is faulty.	Clean the terminals of the wire connector below and reinsert them. If there is no continuity, replace the wire. • IS upper tray Regist sensor - IS PWB • IS lower tray Regist sensor - IS PWB • IS upper tray Regist motor - IS PWB	
3	Checking the ISA upper tray regist sensor	The IS upper tray regist sensor is not working properly.	Execute U241 [Inserter] > [Upper Tray Regist]. If the IS upper tray regist sensor does not work properly,reinstall it and reconnect the connector. If it is not repaired, replace it.	
4	Checking the IS lower tray Regist sensor	The IS lower tray regist sensor is not operating properly.	Execute U241 [Inserter] > [Lower Tray Regist]. If the IS lower tray Regist sensor does not work properly,reinstall it and reconnect the connector. If it is not repaired, replace it.	
5	Checking the IS upper tray regist motor	The IS upper tray regist motor is not operating properly.	Execute U240 [Inserter] > [Upper Tray Regist]. If the IS upper tray regist motor does not work properly,reinstall it and reconnect the connector. If it is not repaired, replace it.	
6	IS PWB replacement	The IS PWB is faulty.	Replace the IS PWB.	

JA310: IS upper tray regist sensor stay JAM

After the IS upper tray Regist sensor is turned on, the IS upper tray Regist sensor does not turn off even after a specified time has passed. (Inserter)

Step	Check description	Assumed cause	Measures	Reference
1	Checking the paper conveying parts	Rollers,guides,etc. are not installed properly. Or there is dirt,deformation,or wear.	Clean ,repair and reattach the conveying parts such as the roller,guide,etc. If not repaired, replace it.	
2	Checking the connection	The connector is not connected properly,or the wire is faulty.	Clean the terminals of the wire connector below and reinsert them. If there is no continuity, replace the wire. • IS upper tray regist sensor - IS PWB • IS upper tray regist motor - IS PWB	
3	Checking the ISA upper tray regist sensor	The IS upper tray regist sensor is not working properly.	Execute U241 [Inserter] > [Upper Tray Regist]. If the IS upper tray regist sensor does not work properly,reinstall it and reconnect the connector. If it is not repaired, replace it.	
4	Checking the IS upper tray regist motor	The IS upper tray regist motor is not operating properly.	Execute U240 [Inserter] > [Upper Tray Regist]. If the IS upper tray regist motor does not work properly,reinstall it and reconnect the connector. If it is not repaired, replace it.	
5	IS PWB replacement	The IS PWB is faulty.	Replace the IS PWB.	

JA311: IS lower tray regist sensor stay JAM1

After the IS lower tray Regist sensor is turned on, the IS lower tray Regist sensor does not turn off even after a specified time has passed. (Inserter)

Step	Check description	Assumed cause	Measures	Reference
1	Checking the paper conveying parts	Rollers,guides,etc. are not installed properly. Or there is dirt,deformation,or wear.	Clean ,repair and reattach the conveying parts such as the roller,guide,etc. If not repaired, replace it.	
2	Checking the connection	The connector is not connected properly,or the wire is faulty.	Clean the terminals of the wire connector below and reinsert them. If there is no continuity, replace the wire. • IS lower tray Regist sensor-IS PWB • IS lower tray Regist motor-IS PWB	
3	Checking the IS lower tray Regist sensor	The IS lower tray regist sensor is not operating properly.	Execute U241 [Inserter] > [Lower Tray Regist]. If the IS lower tray Regist sensor does not work properly,reinstall it and reconnect the connector. If it is not repaired, replace it.	
4	Checking the IS lower tray Regist motor	The IS lower tray Regist motor is not operating properly.	Execute U240 [Inserter] > [Lower Tray Regist]. If the IS lower tray Regist motor does not work properly,reinstall it and reconnect the connector. If it is not repaired, replace it.	
5	IS PWB replacement	The IS PWB is faulty.	Replace the IS PWB.	

JA313: IS marge conveying sensor stay JAM

The IS merge conveying sensor does not turn off even after a specified time has passed after the IS merge conveying motor is driven. (Inserter)

Step	Check description	Assumed cause	Measures	Reference
1	Checking the paper conveying parts	Rollers,guides,etc. are not installed properly. Or there is dirt,deformation,or wear.	Clean ,repair and reattach the conveying parts such as the roller,guide,etc. If not repaired, replace it.	
2	Checking the connection	The connector is not connected properly,or the wire is faulty.	Clean the terminals of the wire connector below and reinsert them. If there is no continuity, replace the wire. • IS merging conveying sensor - IS PWB • IS merge conveying motor - IS PWB	
3	Checking the IS merge conveying sensor	The IS merge conveying sensor is not operating properly.	Execute U241 [Inserter] > [Confluence]. If the IS merge conveying sensor does not work properly,reinstall it and reconnect the connector. If it is not repaired, replace it.	
4	Checking the IS merge conveying motor	The IS merge conveying motor is not operating properly.	Execute U240 [Inserter] > [Vertical Feed L]. If the IS merge conveying motor does not work properly,reinstall it and reconnect the connector. If it is not repaired, replace it.	
5	IS PWB replacement	The IS PWB is faulty.	Replace the IS PWB.	

JA314: IS lower tray regist sensor stay JAM2

After the IS upper tray Regist sensor is turned off, the IS lower tray Regist sensor does not turn off even after a specified time has passed. (Inserter)

Step	Check description	Assumed cause	Measures	Reference
1	Checking the paper conveying parts	Rollers,guides,etc. are not installed properly. Or there is dirt,deformation,or wear.	Clean ,repair and reattach the conveying parts such as the roller,guide,etc. If not repaired, replace it.	
2	Checking the connection	The connector is not connected properly,or the wire is faulty.	Clean the terminals of the wire connector below and reinsert them. If there is no continuity, replace the wire. • IS lower tray Regist sensor-IS PWB • IS lower tray Regist motor-IS PWB	
3	Checking the IS lower tray Regist sensor	The IS lower tray regist sensor is not operating properly.	Execute U241 [Inserter] > [Lower Tray Regist]. If the IS lower tray Regist sensor does not work properly,reinstall it and reconnect the connector. If it is not repaired, replace it.	
4	Checking the IS lower tray Regist motor	The IS lower tray Regist motor is not operating properly.	Execute U240 [Inserter] > [Lower Tray Regist]. If the IS lower tray Regist motor does not work properly,reinstall it and reconnect the connector. If it is not repaired, replace it.	
5	IS PWB replacement	The IS PWB is faulty.	Replace the IS PWB.	

JA900: IS upper tray lift motor JAM

When the IS upper tray lift is raised, the IS upper tray pickup sensor does not turn off even if the retry operation is repeated three times. (Inserter)

Step	Check description	Assumed cause	Measures	Reference
1	Checking the paper conveying parts	Rollers,guides,etc. are not installed properly. Or there is dirt,deformation,or wear.	Clean ,repair and reattach the conveying parts such as the roller,guide,etc. If not repaired, replace it.	
2	Checking the connection	The connector is not connected properly,or the wire is faulty.	Clean the terminals of the wire connector below and reinsert them. If there is no continuity, replace the wire. • IS upper tray pickup sensor - IS PWB • IS upper tray lift motor - IS PWB	
3	Checking the IS upper tray pickup sensor	The IS upper tray pickup sensor is not working properly.	Execute U241 [Inserter] > [Upper Tray Lift U]. If the IS upper tray pickup sensor does not work properly,reinstall it and reconnect the connector. If it is not repaired, replace it.	
4	Checking the IS upper tray lift motor	The IS upper tray lift motor is not working properly.	Execute U240 [Inserter] > [Upper Tray Lift]. If the IS upper tray lift motor does not work properly,reinstall it and reconnect the connector. If it is not repaired, replace it.	
5	IS PWB replacement	The IS PWB is faulty.	Replace the IS PWB.	

JA901: IS lower tray lift motor JAM

When the IS lower tray lift is raised, the IS lower tray pickup sensor does not turn off even if the retry operation is repeated 3 times. (Inserter)

Step	Check description	Assumed cause	Measures	Reference
1	Checking the paper conveying parts	Rollers,guides,etc. are not installed properly. Or there is dirt,deformation,or wear.	Clean ,repair and reattach the conveying parts such as the roller,guide,etc. If not repaired, replace it.	
2	Checking the connection	The connector is not connected properly,or the wire is faulty.	Clean the terminals of the wire connector below and reinsert them. If there is no continuity, replace the wire. • IS lower tray pickup sensor - IS PWB • IS lower tray lift motor - IS PWB	
3	Checking the IS lower tray pickup sensor	The IS lower tray pickup sensor is not working properly.	Execute U241 [Inserter] > [Lower Tray Lift U]. If the IS lower tray pickup sensor does not work properly,reinstall it and reconnect the connector. If it is not repaired, replace it.	
4	Checking the IS lower tray lift motor	The IS lower tray lift motor is not operating properly.	Execute U240 [Inserter] > [Lower Tray Lift]. If the IS lower tray lift motor does not work properly,reinstall it and reconnect the connector. If it is not repaired, replace it.	
5	IS PWB replacement	The IS PWB is faulty.	Replace the IS PWB.	

JA910: Paper attribute cancel JAM

The paper ID was being transported when the paper attribute cancel command was received. (Inserter)

Step	Check description	Assumed cause	Measures	Reference
1	Resetting the power	The inserter firmware is not working properly.	Remove a piece of paper from each conveying section,turn off the power switch,and pull out the power plug. After 5 seconds,reconnect the power plug and turn on the power switch.	
2	Firmware upgrade	The firmware does not properly activate.	Upgrade the firmware to the latest version.	
3	IS PWB replacement	The IS PWB is faulty.	Replace the IS PWB.	

JB000: Entrance sensor non-arrival JAM

After the eject reversal sensor is turned on, the entrance sensor does not turn on even after a specified time has passed. (Z fold unit)

Step	Check description	Assumed cause	Measures	Reference
1	Checking the paper conveying parts	Rollers,guides,etc. are not installed properly. Or there is dirt,deformation,or wear.	Clean ,repair and reattach the conveying parts such as the roller,guide,etc. If not repaired, replace it.	
2	Checking the connection	The connector is not connected properly,or the wire is faulty.	Clean the terminals of the wire connector below and reinsert them. If there is no continuity, replace the wire. • Inlet sensor - ZF PWB • ZF PWB - Engine PWB	
3	Checking the entrance sensor	The entrance sensor is not working properly.	Execute U241 [Z-Fold] > [Inlet Switch]. If the inlet sensor does not work properly,reinstall it and reconnect the connector. If it is not repaired, replace it.	
4	ZF PWB replacement	There is something wrong with the ZF PWB.	Replace the ZF PWB.	

JB010: Entrance sensor stay JAM

After the entrance sensor is turned on, the entrance sensor does not turn off even after a specified time has passed. (Z fold unit)

Step	Check description	Assumed cause	Measures	Reference
1	Checking the paper conveying parts	Rollers,guides,etc. are not installed properly. Or there is dirt,deformation,or wear.	Clean ,repair and reattach the conveying parts such as the roller,guide,etc. If not repaired, replace it.	
2	Checking the connection	The connector is not connected properly,or the wire is faulty.	Clean the terminals of the wire connector below and reinsert them. If there is no continuity, replace the wire. • Inlet sensor - ZF PWB • Inlet motor - ZF PWB	
3	Checking the entrance sensor	The entrance sensor is not working properly.	Execute U241 [Z-Fold] > [Inlet Switch]. If the inlet sensor does not work properly,reinstall it and reconnect the connector. If it is not repaired, replace it.	
4	Checking the entrance motor	The inlet motor is not working properly.	Execute U240 [Z-Fold] > [Inlet]. If the inlet motor does not work properly,reinstall it and reconnect the connector. If it is not repaired, replace it.	
5	ZF PWB replacement	There is something wrong with the ZF PWB.	Replace the ZF PWB.	

JB100: Regist front sensor non-arrival JAM

After the entrance sensor is turned on, the pre-Regist sensor does not turn on even after a specified time has passed. (Z fold unit)

Step	Check description	Assumed cause	Measures	Reference
1	Checking the paper conveying parts	Rollers,guides,etc. are not installed properly. Or there is dirt,deformation,or wear.	Clean ,repair and reattach the conveying parts such as the roller,guide,etc. If not repaired, replace it.	
2	Checking the connection	The connector is not connected properly,or the wire is faulty.	Clean the terminals of the wire connector below and reinsert them. If there is no continuity, replace the wire. • Inlet sensor - ZF PWB • Regist front sensor - ZF PWB • Inlet motor - ZF PWB	
3	Checking the entrance sensor	The entrance sensor is not working properly.	Execute U241 [Z-Fold] > [Inlet Switch]. If the inlet sensor does not work properly,reinstall it and reconnect the connector. If it is not repaired, replace it.	
4	Checking the regist front sensor	The regist front sensor is not working properly.	Execute U241 [Z-Fold] > [Regist Front Switch]. If the regist front sensor does not work properly,reinstall it and reconnect the connector. If it is not repaired, replace it.	
5	Checking the entrance motor	The inlet motor is not working properly.	Execute U240 [Z-Fold] > [Inlet]. If the inlet motor does not work properly,reinstall it and reconnect the connector. If it is not repaired, replace it.	
6	ZF PWB replacement	There is something wrong with the ZF PWB.	Replace the ZF PWB.	

JB110: Regist front sensor stay JAM

After the pre-Regist sensor is turned on, the pre-Regist sensor does not turn off even after a specified time has passed. (Z fold unit)

Step	Check description	Assumed cause	Measures	Reference
1	Checking the paper conveying parts	Rollers,guides,etc. are not installed properly. Or there is dirt,deformation,or wear.	Clean ,repair and reattach the conveying parts such as the roller,guide,etc. If not repaired, replace it.	
2	Checking the connection	The connector is not connected properly,or the wire is faulty.	Clean the terminals of the wire connector below and reinsert them. If there is no continuity, replace the wire. • Regist front sensor - ZF PWB • Regist front motor - ZF PWB	
3	Checking the regist front sensor	The regist front sensor is not working properly.	Execute U241 [Z-Fold] > [Regist Front Switch]. If the regist front sensor does not work properly,reinstall it and reconnect the connector. If it is not repaired, replace it.	
4	Checking the regist front motor	The regist front motor is not working properly.	Execute U240 [Z-Fold] > [Regist Front]. If the regist front motor does not work properly,reinstall it and reconnect the connector. If it is not repaired, replace it.	
5	ZF PWB replacement	There is something wrong with the ZF PWB.	Replace the ZF PWB.	

JB200: Regist sensor non-arrival JAM

After the pre-Regist sensor is turned on, the Regist sensor does not turn on even after a specified time has passed. (Z fold unit)

Step	Check description	Assumed cause	Measures	Reference
1	Checking the paper conveying parts	Rollers,guides,etc. are not installed properly. Or there is dirt,deformation,or wear.	Clean ,repair and reattach the conveying parts such as the roller,guide,etc. If not repaired, replace it.	
2	Checking the connection	The connector is not connected properly,or the wire is faulty.	Clean the terminals of the wire connector below and reinsert them. If there is no continuity, replace the wire. • Regist sensor - ZF PWB • Regist front motor - ZF PWB	
3	Checking the registration sensor	The registration sensor does not operate properly.	Execute U241 [Z-Fold] > [Regist Switch]. If the regist sensor does not work properly,reinstall it and reconnect the connector. If it is not repaired, replace it.	
4	Checking the regist front motor	The regist front motor is not working properly.	Execute U240 [Z-Fold] > [Regist Front]. If the regist front motor does not work properly,reinstall it and reconnect the connector. If it is not repaired, replace it.	
5	ZF PWB replacement	There is something wrong with the ZF PWB.	Replace the ZF PWB.	

JB210: Regist sensor stay JAM

After the pre-Regist sensor is turned off, the Regist sensor does not turn off even after a specified time has passed. (Z fold unit)

Step	Check description	Assumed cause	Measures	Reference
1	Checking the paper conveying parts	Rollers,guides,etc. are not installed properly. Or there is dirt,deformation,or wear.	Clean ,repair and reattach the conveying parts such as the roller,guide,etc. If not repaired, replace it.	
2	Checking the connection	The connector is not connected properly,or the wire is faulty.	Clean the terminals of the wire connector below and reinsert them. If there is no continuity, replace the wire. • Regist sensor - ZF PWB • Regist motor - ZF PWB	
3	Checking the registration sensor	The registration sensor does not operate properly.	Execute U241 [Z-Fold] > [Regist Switch]. If the regist sensor does not work properly,reinstall it and reconnect the connector. If it is not repaired, replace it.	
4	Checking the regist motor	The regist motor is not working properly.	Execute U240 [Z-Fold] > [Regist]. If the regist motor does not work properly,reinstall it and reconnect the connector. If it is not repaired, replace it.	
5	ZF PWB replacement	There is something wrong with the ZF PWB.	Replace the ZF PWB.	

JB300: Primary forward/reverse sensor non-arrival JAM

The Primary forward/reverse sensor does not turn on even after a specified time has elapsed after the start of forward rotation of the Regist motor after the skew correction is completed. (Z fold unit)

Step	Check description	Assumed cause	Measures	Reference
1	Checking the paper conveying parts	Rollers,guides,etc. are not installed properly. Or there is dirt,deformation,or wear.	Clean ,repair and reattach the conveying parts such as the roller,guide,etc. If not repaired, replace it.	
2	Checking the connection	The connector is not connected properly,or the wire is faulty.	Clean the terminals of the wire connector below and reinsert them. If there is no continuity, replace the wire. • Primary forward/reverse sensor - ZF PWB • Regist motor - ZF PWB	
3	Checking the primary forward / reverse sensor	The Primary forward/reverse sensor is not working properly.	Execute U241 [Z-Fold] > [First Fwd / Rvs]. If the Primary forward/reverse sensor does not work properly,reinstall it and reconnect the connector. If it is not repaired, replace it.	
4	Checking the regist motor	The regist motor is not working properly.	Execute U240 [Z-Fold] > [Regist]. If the regist motor does not work properly,reinstall it and reconnect the connector. If it is not repaired, replace it.	
5	ZF PWB replacement	There is something wrong with the ZF PWB.	Replace the ZF PWB.	

JB310: Primary forward/reverse sensor stay JAM

The Primary forward/reverse sensor does not turn off even after a specified time has passed since the folding roller reverse rotation started. (Z fold unit)

Step	Check description	Assumed cause	Measures	Reference
1	Checking the paper conveying parts	Rollers,guides,etc. are not installed properly. Or there is dirt,deformation,or wear.	Clean ,repair and reattach the conveying parts such as the roller,guide,etc. If not repaired, replace it.	
2	Checking the connection	The connector is not connected properly,or the wire is faulty.	Clean the terminals of the wire connector below and reinsert them. If there is no continuity, replace the wire. • Primary forward/reverse sensor - ZF PWB • Folding motor - ZF PWB	
3	Checking the primary forward / reverse sensor	The Primary forward/reverse sensor is not working properly.	Execute U241 [Z-Fold] > [First Fwd / Rvs]. If the Primary forward/reverse sensor does not work properly,reinstall it and reconnect the connector. If it is not repaired, replace it.	
4	Checking the folding motor	The folding motor is not working properly.	Execute U240 [Z-Fold] > [Fold]. If the folding motor does not work properly,reinstall it and reconnect the connector. If it is not repaired, replace it.	
5	ZF PWB replacement	There is something wrong with the ZF PWB.	Replace the ZF PWB.	

JB400: Paper overlap sensor non-arrival JAM

After the Regist roller starts reversing due to stacking, the paper stacking sensor does not turn on even after a specified time has passed. (Z fold unit)

Step	Check description	Assumed cause	Measures	Reference
1	Checking the paper conveying parts	Rollers,guides,etc. are not installed properly. Or there is dirt,deformation,or wear.	Clean ,repair and reattach the conveying parts such as the roller,guide,etc. If not repaired, replace it.	
2	Checking the connection	The connector is not connected properly,or the wire is faulty.	Clean the terminals of the wire connector below and reinsert them. If there is no continuity, replace the wire. • Paper stacking sensor - ZF PWB • Regist motor - ZF PWB • Paper stacking motor - ZF PWB	
3	Checking the paper stacking sensor	The paper stacking sensor is not working properly.	Execute U241 [Z-Fold] > [Paper Stack]. If the paper stack sensor does not work properly,reinstall it and reconnect the connector. If it is not repaired, replace it.	
4	Checking the regist motor	The regist motor is not working properly.	Execute U240 [Z-Fold] > [Regist]. If the regist motor does not work properly,reinstall it and reconnect the connector. If it is not repaired, replace it.	
5	Checking the paper stacking motor	The paper stacking motor is not working properly.	Execute U240 [Z-Fold] > [Paper Stack]. If the paper stacking motor does not work properly,reinstall it and reconnect the connector. If it is not repaired, replace it.	
6	ZF PWB replacement	There is something wrong with the ZF PWB.	Replace the ZF PWB.	

JB410: Paper overlap sensor stay JAM

The paper stacking sensor does not turn off even after a specified time has elapsed after the paper stacking roller starts conveying in the paper ejection direction. (Z fold unit)

Step	Check description	Assumed cause	Measures	Reference
1	Checking the paper conveying parts	Rollers,guides,etc. are not installed properly. Or there is dirt,deformation,or wear.	Clean ,repair and reattach the conveying parts such as the roller,guide,etc. If not repaired, replace it.	
2	Checking the connection	The connector is not connected properly,or the wire is faulty.	Clean the terminals of the wire connector below and reinsert them. If there is no continuity, replace the wire. • Paper stacking sensor - ZF PWB • Paper stacking motor - ZF PWB • Regist motor - ZF PWB	
3	Checking the paper stacking sensor	The paper stacking sensor is not working properly.	Execute U241 [Z-Fold] > [Paper Stack]. If the paper stack sensor does not work properly,reinstall it and reconnect the connector. If it is not repaired, replace it.	
4	Checking the paper stacking motor	The paper stacking motor is not working properly.	Execute U240 [Z-Fold] > [Paper Stack]. If the paper stacking motor does not work properly,reinstall it and reconnect the connector. If it is not repaired, replace it.	
5	Checking the regist motor	The regist motor is not working properly.	Execute U240 [Z-Fold] > [Regist]. If the regist motor does not work properly,reinstall it and reconnect the connector. If it is not repaired, replace it.	
6	ZF PWB replacement	There is something wrong with the ZF PWB.	Replace the ZF PWB.	

JB500: Secondary forward/reverse sensor non-arrival JAM

The secondary forward/reverse sensor does not turn on even after a specified time has passed after the start of forward rotation of the Regist roller. (Fold in half)
The secondary forward/reverse sensor does not turn on even after a specified time has passed since the folding roller reverse rotation started. (Other than folding in half) (Z folding unit)

Step	Check description	Assumed cause	Measures	Reference
1	Checking the paper conveying parts	Rollers,guides,etc. are not installed properly. Or there is dirt,deformation,or wear.	Clean ,repair and reattach the conveying parts such as the roller,guide,etc. If not repaired, replace it.	
2	Checking the connection	The connector is not connected properly,or the wire is faulty.	Clean the terminals of the wire connector below and reinsert them. If there is no continuity, replace the wire. • Secondary forward/reverse sensor - ZF PWB • Regist motor - ZF PWB (folded in half) • Folding motor - ZF PWB • Secondary forward/reverse motor - ZF PWB	
3	Checking the secondary forward/reverse sensor	The secondary forward/ reverse sensor is not working properly.	Execute U241 [Z-Fold] > [Second Fwd / Rvs]. If the Secondary forward/reverse sensor does not work properly,reinstall it and reconnect the connector. If it is not repaired, replace it.	
4	Checking the regist motor (folded in half)	The regist motor is not working properly.	Execute U240 [Z-Fold] > [Regist]. If the regist motor does not work properly,reinstall it and reconnect the connector. If it is not repaired, replace it.	
5	Checking the folding motor	The folding motor is not working properly.	Execute U240 [Z-Fold] > [Fold]. If the folding motor does not work properly,reinstall it and reconnect the connector. If it is not repaired, replace it.	
6	Checking the Secondary forward/reverse motor	The Secondary forward/ reverse motor is not operating properly.	Execute U240 [Z-Fold] > [Second Fwd / Rvs]. If the Secondary forward/reverse motor does not work properly,reinstall it and reconnect the connector. If it is not repaired, replace it.	
7	ZF PWB replacement	There is something wrong with the ZF PWB.	Replace the ZF PWB.	

JB510: Secondary forward/reverse sensor stay JAM

The secondary forward/reverse sensor does not turn off even after a specified time has passed after the folding roller starts increasing from the second folding line speed to the increasing speed. (Z fold unit)

Step	Check description	Assumed cause	Measures	Reference
1	Checking the paper conveying parts	Rollers,guides,etc. are not installed properly. Or there is dirt,deformation,or wear.	Clean ,repair and reattach the conveying parts such as the roller,guide,etc. If not repaired, replace it.	
2	Checking the connection	The connector is not connected properly,or the wire is faulty.	Clean the terminals of the wire connector below and reinsert them. If there is no continuity, replace the wire. • Secondary forward/reverse sensor-ZF PWB • Folding motor-ZF PWB	
3	Checking the secondary forward/reverse sensor	The secondary forward/ reverse sensor is not working properly.	Execute U241 [Z-Fold] > [Second Fwd / Rvs]. If the Secondary forward/reverse sensor does not work properly,reinstall it and reconnect the connector. If it is not repaired, replace it.	
4	Checking the folding motor	The folding motor is not working properly.	Execute U240 [Z-Fold] > [Fold]. If the folding motor does not work properly,reinstall it and reconnect the connector. If it is not repaired, replace it.	
5	ZF PWB replacement	There is something wrong with the ZF PWB.	Replace the ZF PWB.	

JB600: Extra folding sensor non-arrival JAM

After the primary conveying motor drive is started after the folding process, the extra folding sensor does not turn on even after a specified time has passed. (Z fold unit)

Step	Check description	Assumed cause	Measures	Reference
1	Checking the paper conveying parts	Rollers,guides,etc. are not installed properly. Or there is dirt,deformation,or wear.	Clean ,repair and reattach the conveying parts such as the roller,guide,etc. If not repaired, replace it.	
2	Checking the connection	The connector is not connected properly,or the wire is faulty.	Clean the terminals of the wire connector below and reinsert them. If there is no continuity, replace the wire. • Extra folding sensor - ZF PWB • Primary conveying motor - ZF PWB	
3	Checking the extra folding sensor	The extra folding sensor is not working properly.	Execute U241 [Z-Fold] > [Incr Fold]. If the extra folding sensor does not work properly,reinstall it and reconnect the connector. If it is not repaired, replace it.	
4	Checking the Primary conveying motor	The Primary conveying motor is not operating properly.	Execute U240 [Z-Fold] > [First conveying]. If the 1st conveying motor does not work properly,reinstall it and reconnect the connector. If it is not repaired, replace it.	
5	ZF PWB replacement	There is something wrong with the ZF PWB.	Replace the ZF PWB.	

JB610: Extra folding sensor stay JAM

After the extra folding sensor is turned on, the extra folding sensor does not turn off even after a specified time has passed. (Z fold unit)

Step	Check description	Assumed cause	Measures	Reference
1	Checking the paper conveying parts	Rollers,guides,etc. are not installed properly. Or there is dirt,deformation,or wear.	Clean ,repair and reattach the conveying parts such as the roller,guide,etc. If not repaired, replace it.	
2	Checking the connection	The connector is not connected properly,or the wire is faulty.	• Clean the terminals of the wire connector below and reinsert them. If there is no continuity, replace the wire. Extra folding sensor - ZF PWB • Primary conveying motor - ZF PWB	
3	Checking the extra folding sensor	The extra folding sensor is not working properly.	Execute U241 [Z-Fold] > [Incr Fold]. If the extra folding sensor does not work properly,reinstall it and reconnect the connector. If it is not repaired, replace it.	
4	Checking the Primary conveying motor	The Primary conveying motor is not operating properly.	Execute U240 [Z-Fold] > [First conveying]. If the 1st conveying motor does not work properly,reinstall it and reconnect the connector. If it is not repaired, replace it.	
5	ZF PWB replacement	There is something wrong with the ZF PWB.	Replace the ZF PWB.	

JB700: Relay eject sensor non-arrival JAM

After the extra folding sensor is turned on, the relay paper ejection sensor does not turn on even after a specified time has passed. (Z fold unit)

Step	Check description	Assumed cause	Measures	Reference
1	Checking the paper conveying parts	Rollers,guides,etc. are not installed properly. Or there is dirt,deformation,or wear.	Clean ,repair and reattach the conveying parts such as the roller,guide,etc. If not repaired, replace it.	
2	Checking the connection	The connector is not connected properly,or the wire is faulty.	Clean the terminals of the wire connector below and reinsert them. If there is no continuity, replace the wire. • Relay eject sensor - ZF PWB • Primary conveying motor - ZF PWB • Secondary conveying motor - ZF PWB	
3	Checking the relay paper ejection sensor	The relay output sensor is not working properly.	Execute U241 [Z-Fold] > [Relay Eject]. If the relay output sensor does not work properly,reinstall it and reconnect the connector. If it is not repaired, replace it.	
4	Checking the Primary conveying motor	The Primary conveying motor is not operating properly.	Execute U240 [Z-Fold] > [First conveying]. If the 1st conveying motor does not work properly,reinstall it and reconnect the connector. If it is not repaired, replace it.	
5	Checking the Secondary conveying motor	The secondary conveying motor is not operating properly.	Execute U240 [Z-Fold] > [Second conveying]. If the 2nd conveying motor does not work properly,reinstall it and reconnect the connector. If it is not repaired, replace it.	
6	ZF PWB replacement	There is something wrong with the ZF PWB.	Replace the ZF PWB.	

JB710: Relay eject sensor stay JAM

After the relay paper ejection sensor is turned on, the relay paper ejection sensor does not turn off even after a specified time has passed. (Z fold unit)

Step	Check description	Assumed cause	Measures	Reference
1	Checking the paper conveying parts	Rollers,guides,etc. are not installed properly. Or there is dirt,deformation,or wear.	Clean ,repair and reattach the conveying parts such as the roller,guide,etc. If not repaired, replace it.	
2	Checking the connection	The connector is not connected properly,or the wire is faulty.	Clean the terminals of the wire connector below and reinsert them. If there is no continuity, replace the wire. • Middle output sensor-ZF PWB • Secondary conveying motor - ZF PWB	
3	Checking the relay paper ejection sensor	The relay output sensor is not working properly.	Execute U241 [Z-Fold] > [Relay Eject]. If the relay output sensor does not work properly,reinstall it and reconnect the connector. If it is not repaired, replace it.	
4	Checking the Secondary conveying motor	The secondary conveying motor is not operating properly.	Execute U240 [Z-Fold] > [Second conveying]. If the 2nd conveying motor does not work properly,reinstall it and reconnect the connector. If it is not repaired, replace it.	
5	ZF PWB replacement	There is something wrong with the ZF PWB.	Replace the ZF PWB.	

JB800: Eject sensor non-arrival JAM

After the relay paper ejection sensor is turned on, the paper ejection sensor does not turn on even after a specified time has passed. (Z fold unit)

Step	Check description	Assumed cause	Measures	Reference
1	Checking the paper conveying parts	Rollers,guides,etc. are not installed properly. Or there is dirt,deformation,or wear.	Clean ,repair and reattach the conveying parts such as the roller,guide,etc. If not repaired, replace it.	
2	Checking the connection	The connector is not connected properly,or the wire is faulty.	Clean the terminals of the wire connector below and reinsert them. If there is no continuity, replace the wire. • Eject sensor - ZF PWB • Secondary conveying motor - ZF PWB • Folding eject tray motor - ZF PWB	
3	Checking the output sensor	The output sensor is not working properly.	Execute U241 [Z-Fold] > [Eject]. If the paper eject sensor does not work properly,reinstall it and reconnect the connector. If it is not repaired, replace it.	
4	Checking the Secondary conveying motor	The secondary conveying motor is not operating properly.	Execute U240 [Z-Fold] > [Second conveying]. If the 2nd conveying motor does not work properly,reinstall it and reconnect the connector. If it is not repaired, replace it.	
5	Checking the folding output tray motor	The folding paper tray motor is not working properly.	Execute U240 [Z-Fold] > [Fold Eject Tray]. If the folding paper tray motor does not work properly,reinstall it and reconnect the connector. If it is not repaired, replace it.	
6	ZF PWB replacement	There is something wrong with the ZF PWB.	Replace the ZF PWB.	

JB810: Eject sensor stay JAM

After the paper eject sensor is turned on, the paper eject sensor does not turn off even after a specified time has passed. (Z fold unit)

Step	Check description	Assumed cause	Measures	Reference
1	Checking the paper conveying parts	Rollers,guides,etc. are not installed properly. Or there is dirt,deformation,or wear.	Clean ,repair and reattach the conveying parts such as the roller,guide,etc. If not repaired, replace it.	
2	Checking the connection	The connector is not connected properly,or the wire is faulty.	Clean the terminals of the wire connector below and reinsert them. If there is no continuity, replace the wire. • Eject sensor - ZF PWB • Folding eject tray motor - ZF PWB	
3	Checking the output sensor	The output sensor is not working properly.	Execute U241 [Z-Fold] > [Eject]. If the paper eject sensor does not work properly,reinstall it and reconnect the connector. If it is not repaired, replace it.	
4	Checking the folding output tray motor	The folding paper tray motor is not working properly.	Execute U240 [Z-Fold] > [Fold Eject Tray]. If the folding paper tray motor does not work properly,reinstall it and reconnect the connector. If it is not repaired, replace it.	
5	ZF PWB replacement	There is something wrong with the ZF PWB.	Replace the ZF PWB.	

JB900: Entrance motor JAM

Encoder error (The actual movement distance was shorter than the target movement distance occurred twice in a row.) (Z-fold unit)

Step	Check description	Assumed cause	Measures	Reference
1	Checking the connection	The connector is not connected properly,or the wire is faulty.	Clean the terminals of the wire connector below and reinsert them. If there is no continuity, replace the wire. • Inlet motor - ZF PWB	
2	Checking the entrance motor	The inlet motor is not working properly.	Execute U240 [Z-Fold] > [Inlet]. If the inlet motor does not work properly,reinstall it and reconnect the connector. If it is not repaired, replace it.	
3	ZF PWB replacement	There is something wrong with the ZF PWB.	Replace the ZF PWB.	

JB901: Regist front motor JAM

Encoder error (The actual movement distance was shorter than the target movement distance occurred twice in a row.) (Z-fold unit)

Step	Check description	Assumed cause	Measures	Reference
1	Checking the connection	The connector is not connected properly,or the wire is faulty.	Clean the terminals of the wire connector below and reinsert them. If there is no continuity, replace the wire. • Regist front motor - ZF PWB	
2	Checking the regist front motor	The regist front motor is not working properly.	Execute U240 [Z-Fold] > [Regist Front]. If the regist front motor does not work properly,reinstall it and reconnect the connector. If it is not repaired, replace it.	
3	ZF PWB replacement	There is something wrong with the ZF PWB.	Replace the ZF PWB.	

JB902: Regist motor JAM

Encoder error (The actual movement distance was shorter than the target movement distance occurred twice in a row.) (Z-fold unit)

Step	Check description	Assumed cause	Measures	Reference
1	Checking the connection	The connector is not connected properly,or the wire is faulty.	Clean the terminals of the wire connector below and reinsert them. If there is no continuity, replace the wire. • Regist motor - ZF PWB	
2	Checking the regist motor	The regist motor is not working properly.	Execute U240 [Z-Fold] > [Regist]. If the regist motor does not work properly,reinstall it and reconnect the connector. If it is not repaired, replace it.	
3	ZF PWB replacement	There is something wrong with the ZF PWB.	Replace the ZF PWB.	

JB903: Paper overlap motor JAM

Encoder error (The actual movement distance was shorter than the target movement distance occurred twice in a row.) (Z-fold unit)

Step	Check description	Assumed cause	Measures	Reference
1	Checking the connection	The connector is not connected properly,or the wire is faulty.	Clean the terminals of the wire connector below and reinsert them. If there is no continuity, replace the wire. • Paper stacking motor - ZF PWB	
2	Checking the paper stacking motor	The paper stacking motor is not working properly.	Execute U240 [Z-Fold] > [Paper Stack]. If the paper stacking motor does not work properly,reinstall it and reconnect the connector. If it is not repaired, replace it.	
3	ZF PWB replacement	There is something wrong with the ZF PWB.	Replace the ZF PWB.	

JB904: Folding motor JAM

Encoder error (The actual movement distance was shorter than the target movement distance occurred twice in a row.) (Z-fold unit)

Step	Check description	Assumed cause	Measures	Reference
1	Checking the connection	The connector is not connected properly,or the wire is faulty.	Clean the terminals of the wire connector below and reinsert them. If there is no continuity, replace the wire. • Folding motor - ZF PWB	
2	Checking the folding motor	The folding motor is not working properly.	Execute U240 [Z-Fold] > [Fold]. If the folding motor does not work properly,reinstall it and reconnect the connector. If it is not repaired, replace it.	
3	ZF PWB replacement	There is something wrong with the ZF PWB.	Replace the ZF PWB.	

JB905: Secondary forward/reverse motor JAM

Encoder error (The actual movement distance was shorter than the target movement distance occurred twice in a row.) (Z-fold unit)

Step	Check description	Assumed cause	Measures	Reference
1	Checking the connection	The connector is not connected properly,or the wire is faulty.	Clean the terminals of the wire connector below and reinsert them. If there is no continuity, replace the wire. • Secondary forward/reverse motor - ZF PWB	
2	Checking the secondary forward / reverse motor	The Secondary forward/ reverse motor is not operating properly.	Execute U240 [Z-Fold] > [Second Fwd / Rvs]. If the Secondary forward/reverse motor does not work properly,reinstall it and reconnect the connector. If it is not repaired, replace it.	
3	ZF PWB replacement	There is something wrong with the ZF PWB.	Replace the ZF PWB.	

JB906: Primary conveying motor JAM

Encoder error (The actual movement distance was shorter than the target movement distance occurred twice in a row.) (Z-fold unit)

Step	Check description	Assumed cause	Measures	Reference
1	Checking the connection	The connector is not connected properly,or the wire is faulty.	Clean the terminals of the wire connector below and reinsert them. If there is no continuity, replace the wire. • Primary conveying motor - ZF PWB	
2	Checking the Primary conveying motor	The Primary conveying motor is not operating properly.	Execute U240 [Z-Fold] > [First conveying]. If the 1st conveying motor does not work properly,reinstall it and reconnect the connector. If it is not repaired, replace it.	
3	ZF PWB replacement	There is something wrong with the ZF PWB.	Replace the ZF PWB.	

JB907: Secondary conveying motor JAM

Encoder error (The actual movement distance was shorter than the target movement distance occurred twice in a row.) (Z-fold unit)

Step	Check description	Assumed cause	Measures	Reference
1	Checking the connection	The connector is not connected properly,or the wire is faulty.	Clean the terminals of the wire connector below and reinsert them. If there is no continuity, replace the wire. • Secondary conveying motor - ZF PWB	
2	Checking the Secondary conveying motor	The secondary conveying motor is not operating properly.	Execute U240 [Z-Fold] > [Second conveying]. If the 2nd conveying motor does not work properly,reinstall it and reconnect the connector. If it is not repaired, replace it.	
3	ZF PWB replacement	There is something wrong with the ZF PWB.	Replace the ZF PWB.	

JB908: Folding eject tray motor JAM

Encoder error (The actual movement distance was shorter than the target movement distance occurred twice in a row.) (Z-fold unit)

Step	Check description	Assumed cause	Measures	Reference
1	Checking the connection	The connector is not connected properly,or the wire is faulty.	Clean the terminals of the wire connector below and reinsert them. If there is no continuity, replace the wire. • Folding eject tray motor - ZF PWB	
2	Checking the folding output tray motor	The folding paper tray motor is not working properly.	Execute U240 [Z-Fold] > [Fold Eject Tray]. If the folding paper tray motor does not work properly,reinstall it and reconnect the connector. If it is not repaired, replace it.	
3	ZF PWB replacement	There is something wrong with the ZF PWB.	Replace the ZF PWB.	

JB910: Entrance feedshift claw motor JAM

The entrance feedshift claw HP sensor does not turn on even after a specified time has passed after the start of rotation of the entrance feedshift claw motor. Or, do not turn it off. (Z fold unit)

Step	Check description	Assumed cause	Measures	Reference
1	Checking the connection	The connector is not connected properly,or the wire is faulty.	Clean the terminals of the wire connector below and reinsert them. If there is no continuity, replace the wire. • Inlet feedshift claw HP sensor - ZF PWB • Inlet feedshift claw motor - ZF PWB	
2	Checking the entrance feedshift claw HP sensor	The entrance feedshift claw HP sensor is not working properly.	Execute U241 [Z-Fold] > [Inlet feedshift]. If the inlet feedshift claw HP sensor does not work properly,reinstall it and reconnect the connector. If it is not repaired, replace it.	
3	Checking the entrance feedshift claw motor	The entrance feedshift claw motor is not operating properly.	Execute U240 [Z-Fold] > [Inlet feedshift]. If the inlet feedshift claw motor does not work properly,reinstall it and reconnect the connector. If it is not repaired, replace it.	
4	ZF PWB replacement	There is something wrong with the ZF PWB.	Replace the ZF PWB.	

JB920: Folding feedshift claw motor JAM

The folding claw HP sensor does not turn on even after a specified time has passed after the folding feedshift claw motor starts rotating. Or, do not turn it off. (Z fold unit)

Step	Check description	Assumed cause	Measures	Reference
1	Checking the connection	The connector is not connected properly,or the wire is faulty.	Clean the terminals of the wire connector below and reinsert them. If there is no continuity, replace the wire. • Folding feedshift claw HP sensor - ZF PWB • Folding feedshift claw motor - ZF PWB	
2	Checking the folding claw HP sensor	Folding claw HP sensor is not working properly.	Execute U241 [Z-Fold] > [Fold feedshift]. If the folding claw HP sensor does not work properly,reinstall it and reconnect the connector. If it is not repaired, replace it.	
3	Checking the folding feedshift claw motor	The folding claw motor is not working properly.	Execute U240 [Z-Fold] > [Fold feedshift]. If the folding claw motor does not work properly,reinstall it and reconnect the connector. If it is not repaired, replace it.	
4	ZF PWB replacement	There is something wrong with the ZF PWB.	Replace the ZF PWB.	

JB930: Warp in prevention claw motor JAM

The entanglement prevention claw HP sensor does not turn on even after a specified time has passed after the start of rotation of the entanglement prevention motor. Or, do not turn it off. (Z fold unit)

Step	Check description	Assumed cause	Measures	Reference
1	Checking the connection	The connector is not connected properly,or the wire is faulty.	Clean the terminals of the wire connector below and reinsert them. If there is no continuity, replace the wire. • Roll-up prevention claw HP sensor - ZF PWB • Roll-up prevention claw motor - ZF PWB	
2	Checking the wrap prevention claw HP sensor	Entrainment prevention claw HP sensor is not working properly.	Execute U241 [Z-Fold] > [Entra Prevent]. If the roll-up prevention claw HP sensor does not work properly,reinstall it and reconnect the connector. If it is not repaired, replace it.	
3	Checking the wrap prevention claw motor	The entanglement prevention claw motor is not operating properly.	Execute U240 [Z-Fold] > [Entra Prevent]. If the roll-up claw motor does not work properly,reinstall it and reconnect the connector. If it is not repaired, replace it.	
4	ZF PWB replacement	There is something wrong with the ZF PWB.	Replace the ZF PWB.	

JB940: Extra folding motor JAM

The extra folding HP sensor does not turn on even after a specified time has passed after the start of rotation of the additional folding motor. Or, do not turn it off. (Z fold unit)

Step	Check description	Assumed cause	Measures	Reference
1	Checking the connection	The connector is not connected properly,or the wire is faulty.	Clean the terminals of the wire connector below and reinsert them. If there is no continuity, replace the wire. • Extra folding HP sensor - ZF PWB • Extra folding motor - ZF PWB	
2	Checking the extra folding HP sensor	The fold-back HP sensor is not working properly.	Execute U241 [Z-Fold] > [Incr Fold HP]. If the extra folding HP sensor does not work properly,reinstall it and reconnect the connector. If it is not repaired, replace it.	
3	Checking the extra folding motor	The fold motor is not working properly.	Execute U240 [Z-Fold] > [Incr Fold]. If the extra folding motor does not work properly,reinstall it and reconnect the connector. If it is not repaired, replace it.	
4	ZF PWB replacement	There is something wrong with the ZF PWB.	Replace the ZF PWB.	

JB950: Eject feedshift claw motor JAM

The paper ejection feedshift claw HP sensor does not turn on even after a specified time has passed after the motor starts rotating. Or, do not turn it off. (Z fold unit)

Step	Check description	Assumed cause	Measures	Reference
1	Checking the connection	The connector is not connected properly,or the wire is faulty.	Clean the terminals of the wire connector below and reinsert them. If there is no continuity, replace the wire. • Eject feedshift claw HP sensor - ZF PWB • Eject feedshift claw motor - ZF PWB	
2	Checking the eject feedshift claw HP sensor	The output feedshift claw HP sensor is not working properly.	Execute U241 [Z-Fold] > [Eject feedshift HP]. If the eject feedshift claw HP sensor does not work properly,reinstall it and reconnect the connector. If it is not repaired, replace it.	
3	Checking the eject feedshift claw motor	The paper eject feedshift claw motor is not operating properly.	Execute U240 [Z-Fold] > [Eject feedshift]. If the eject feedshift claw motor does not work properly,reinstall it and reconnect the connector. If it is not repaired, replace it.	
4	ZF PWB replacement	There is something wrong with the ZF PWB.	Replace the ZF PWB.	

JB960: Cover open detection

During conveying, the cover that affects the conveying path was opened. (Z fold unit)

Step	Check description	Assumed cause	Measures	Reference
1	Checking the connection	The connector is not connected properly,or the wire is faulty.	Clean the terminals of the wire connector below and reinsert them. If there is no continuity, replace the wire. • Eject section open/close switch - ZF IO PWB 1 • Relay section open/close switch-ZF IO PWB 1 • Regist front section open/close switch-ZF IO PWB 1 • Extra folding section open/close switch - ZF IO PWB 1 • Regist section open/close switch -ZF IO PWB 1 • Folding section open/close switch -ZF IO PWB 1 • Inlet section open/close switch - ZF IO PWB 1 • Interlock Switch - ZF PWB • ZF IO PWB 1 - ZF PWB	
2	Checking the open/close switch at the output section	The open/close switch at the output section does not operate properly.	Execute U241 [Z-Fold] > [Eject Switch]. If the eject section open/close switch does not work properly,reinstall it and reconnect the connector. If it is not repaired, replace it.	
3	Checking the open/close switch at the relay section	The open/close switch at the relay section does not operate properly.	Execute U241 [Z-Fold] > [Relay Switch]. If the relay section open/close switch does not work properly,reinstall it and reconnect the connector. If it is not repaired, replace it.	
4	Checking the open/close switch at the front regist section	The open/close switch at the regist front section does not operate properly.	Execute U241 [Z-Fold] > [Regist Front Switch]. If the regist front section open/close switch does not work properly,reinstall it and reconnect the connector. If it is not repaired, replace it.	
5	Checking the open/close switch at the extra folding section	The open/close switch at the extra folding section does not operate properly.	Execute U241 [Z-Fold] > [Incr Fold Switch]. If the fold open/close switch does not work properly,reinstall it and reconnect the connector. If it is not repaired, replace it.	
6	Checking the open/close switch at the regist section	The open/close switch at the regist section does not operate properly.	Execute U241 [Z-Fold] > [Regist Switch]. If the Regist part open/close switch does not operate properly,reinstall it and reconnect the connector. If it is not repaired, replace it.	
7	Checking the open/close switch at the folding section	The open/close switch at the folding section does not operate properly.	Execute U241 [Z-Fold] > [Fold Switch]. If the folding section open/close switch does not work properly,reinstall it and reconnect the connector. If it is not repaired, replace it.	
8	Checking the open/close switch at the entrance section	The open/close switch at the entrance section does not operate properly.	Execute U241 [Z-Fold] > [Inlet Switch]. If the inlet section open/close switch does not work properly,reinstall it and reconnect the connector. If it is not repaired, replace it.	
9	Checking the interlock switch	The interlock switch does not operate properly.	Execute U241 [Z-Fold] > [Interlock Switch]. If the interlock switch does not work properly,reinstall it and reconnect the connector. If it is not repaired, replace it.	
10	Replacing the ZF IO PWB 1	The ZF IO PWB is faulty.	Replace ZF IO PWB 1.	

Step	Check description	Assumed cause	Measures	Reference
11	ZF PWB replacement	There is something wrong with the ZF PWB.	Replace the ZF PWB.	

JB970: Indication failure JAM

Received an invalid command. (Z fold unit)

Step	Check description	Assumed cause	Measures	Reference
1	Resetting the power	The firmware of the Z-fold unit is not working properly.	Remove a piece of paper from each conveying section,turn off the power switch,and pull out the power plug. After 5 seconds,reconnect the power plug and turn on the power switch.	
2	Firmware upgrade	The firmware does not properly activate.	Upgrade the firmware to the latest version.	
3	ZF PWB replacement	There is something wrong with the ZF PWB.	Replace the ZF PWB.	

JB980: Invalid paper stop JAM

Due to an abnormality such as a paper jam, paper conveying is stopped and the eject of the rear edge of the paper cannot be notified. (Z fold unit)

Step	Check description	Assumed cause	Measures	Reference
1	Resetting the power	The firmware of the Z-fold unit is not working properly.	Remove a piece of paper from each conveying section,turn off the power switch,and pull out the power plug. After 5 seconds,reconnect the power plug and turn on the power switch.	
2	Firmware upgrade	The firmware does not properly activate.	Upgrade the firmware to the latest version.	
3	ZF PWB replacement	There is something wrong with the ZF PWB.	Replace the ZF PWB.	

JB990: Paper JAM caused by the firmware

The firmware is not working properly. (Z fold unit)

Step	Check description	Assumed cause	Measures	Reference
1	Resetting the power	The firmware of the Z-fold unit is not working properly.	Remove a piece of paper from each conveying section,turn off the power switch,and pull out the power plug. After 5 seconds,reconnect the power plug and turn on the power switch.	
2	Firmware upgrade	The firmware does not properly activate.	Upgrade the firmware to the latest version.	
3	ZF PWB replacement	There is something wrong with the ZF PWB.	Replace the ZF PWB.	

(4)Other Feeding/Conveying Failures

No.	Contents	Condition
(1)	Paper creases (Fuser factor)	
(2)	Paper creases (Registration or Transfer factor)	
(3)	Broken ears due to catching the tip angle of the paper in the PH cutter receiving hole	When feeding LetterR or Legal size paper from cassette 1-4 (except the large capacity feeder), duplex section or the MP tray, the corners of paper leading edge is caught by the PH cutter receiving holes of the punch unit and the dog-ear occurs
(4)	Dog-ear	When feeding from the large capacity feeder, the dog-ear occurs at the primary feeding due to the downward curl of paper.

Content of Feeding/Conveying Failures

(4-1)Paper creases (Fuser factor)

Condition: An image is printed on the creased section.

Step	Check description	Assumed cause	Measures	Reference
1	Checking the paper	Paper is curled caused by the moisture absorption. Or,paper leading edge is waving.	Flip paper upside down and reset. Or,replace with new paper which is unopened paper.	
2	Clean the rear transfer guide and the discharge needle	The surrounding area of the rear transfer guide is dirty with the toner,paper dust,etc..	Clean the back guide,static eliminator needle,static eliminator sheet,and paper carrier with a dry cloth.	
3	(When the paper is transported at an angle) Check the transfer rear guide and discharge needle	Paper is caught in the rear transfer guide,discharge needle,a piece of paper,etc..	If a piece of paper,the foreign objects are on the conveying path,or the foreign objects,a burr are on the rear transfer guide,the discharge needle,remove or replace them. If the guide materials are dropped off,repair or replace them.	
4	(When the paper creases occur at the center of the paper leading edge in case of feeding the duplex 2nd page) Checking the use environment	Under the condition of condensation in the fuser exit guide,curled paper due to moisture absorption is used (it is caught in the dent located at the center of the fuser exit guide as there is no stiffness on paper.)	Clean the fuser output guide with a dry cloth to eliminate condensation. Then replace it with new unopened paper.	
5	(If occurring under a specific condition) Changing the setting	The actual paper and the paper settings (media type,paper size) do not match.	Set the proper media type via the System Menu.	
6	(When occurring under a specific condition that the fuser temperature of before and after becomes non-uniform) Changing the setting	Large size printing after continuous small size printing,long standby setting after printing drive is done	Use U161 [Warm up] and [Print] to return the fuser control temperature setting to the default state. After that,open the right cover (conveyor unit) and leave it for a few minutes to lower the fuser temperature.	
7	Checking the paper storage place	Paper is stored in a damp place.	Instruct the user to store paper tightly sealed in the location where the humidity is low. Or,install the cassette heater.	
8	Checking the secondary transfer roller	The secondary transfer roller is dirty with the toner,paper dust,etc.. Or,it is worn out.	Clean the secondary transfer roller with a dry cloth. If the surface of the secondary transfer roller is worn,replace it.	
9	Replacing the fuser unit	Paper entrance guide of the fuser unit is deformed. The center of the fuser pressure roller is worn out. The pressure spring of back and front of fuser unit is not attached properly.	Check the pressure balance of both ends of the fuser unit by checking the nipped pressure on the solid image. If the balance is uneven,replace the fuser unit.	
10	Replacing the fuser discharge needle unit	The front and back of the paper entry guide of the fuser unit are unevenly charged.	If the leading edge of the fuser discharge needle is dirty with sediments,replace the fuser discharge needle unit.	

(4-2)Paper creases (Registration or Transfer factor)

Condition: No image is printed on the creased section.

Step	Check description	Assumed cause	Measures	Reference
1	Checking the paper	The paper is curled downward or wavy.	Correct or replace paper. If you cannot get user agreement about the paper replacement,relocate the leading end of paper and the trailing end or reload paper upside down.	
2	Checking the paper	foreign objects are on the paper.	Remove paper that the foreign objects adhere from the cassette.	
3	Opening and reclosing the right cover	The right cover is not firmly closed.	Open the right cover (conveying unit) and close it again.	
4	(When the paper is being conveyed obliquely) Resetting the paper width guide or MP paper width guide	The set position of the paper width guides / MP paper width guides is mismatched with the paper size,and so,the paper is skewed.	Reset the paper width guide or the MP paper width guide matches to paper size. Or,check set position of the support guide. (Excluding the cassette1)	
5	Checking the paper feed roller	The conveying function of the paper feed roller is not enough.	Clean the surface of the paper feed roller with a dry cloth. If it is worn,replace it.	
6	Checking the conveying rollers	Conveying related rollers are not attached properly. Or,the conveying capability is not enough due to dirty.	Clean the surfaces of the conveying rollers and rollers (vertical conveying,middle,resist) with a dry cloth and reattach.	
7	(When paper is skewed) Checking the pressure spring	Pressure balance is not good because the pressure spring of front and back of the roller are not attached properly.	Check the pressure of the conveying related rollers and the pulleys,and if the spring or the bearings are dropped off,reattach them. If they are deformed or worn out,replace them.	
8	(When the paper skew occurs) Checking the paper path	Paper is caught at the conveying guide,piece of paper,etc..	If a piece of paper,the foreign objects are on the conveying path,or the foreign objects,a burr are on the conveying surface of the conveying guide,remove or replace them. If the sheet guide material has a damage,deformation,floating,repair or replace them.	
9	Cleaning the conveying guide	The transport frame,resist guide,and pre - transfer guide are dirty with toner,paper dust,etc.	Clean the conveying surface of the conveying frame,resist guide,and pre - transfer guide with a dry cloth.	
10	Checking the conveying guide	The transport frame,resist guide,and pre-transfer guide are not properly installed. Or it is faulty.	Reinstall the conveying frame,resist guide,and pre - transfer guide. If something is wrong,replace it.	

(4-3)Broken ears due to catching the tip angle of the paper in the PH cutter receiving hole

When feeding LetterR or Legal, the tip angle of the paper is caught in the PH cutter receiving hole of the punch unit, causing ear breakage. (When the inner finisher is installed)

Step	Check description	Assumed cause	Measures	Reference
1	Reloading the paper	The paper is curled upward. And so,it is easy to be caught by the PH cutter receiving hole.	Reload paper upside down.	
2	Relocating the paper width guides	Paper skew occurs since there is a gap between the paper width guides and the paper edges.	Relocate the paper width guides so that there is no gap between them to the paper edges.	
3	Explanation for user (request to change from "LetterR" to "Letter")	The corners of the paper leading edge of LetterR are close to the PH cutter receiving holes of the punch unit. Consequently,the corners are caught by the holes if each center position is not adjusted.	Request user to feed paper as "Letter" not but "LetterR". If user accepts,relocate the paper width guides to "Letter" position and load the paper. Then,explain users who need to change "Orientation" in Quick Print on the printer drive so that the orientation is rotated to 90 degrees C.	
4	Adjusting the center positions of the punch unit and the paper width guides	The center positions of the punch unit and the paper width guides are mismatched,and so,the corners of the paper leading edge is caught by the PH cutter receiving holes of the punch unit.	Adjust each center position by the following procedures. (Refer to the reference document" for the details.) 1. Load paper on the MP tray. Then,set the punch holes and execute the test print to align the position of the punch unit. 2. Feed paper from each paper source except the MP tray to check if the forward and backward punch holes are not shifted. 3. If the forward and backward punch holes are shifted aside in above 2, change the center position of the paper width guides to adjust. After changing the center position,execute U034 [Center Line] and adjust the center line except for "MPT".	

(4-4)Dog-ear

When feeding from the large capacity feeder, the dog-ear occurs at the primary feeding due to the downward curl of paper.

Step	Check description	Assumed cause	Measures	Reference
1	Reloading the paper	Paper is caught up at the PF frame with the downward curl.	Reload paper upside down.	

7 - 3 Self Diagnostic

If the part causing the problem was not supplied, use the unit including the part for replacement.

CAUTION

Before attempting to check the fuser unit and the Power supply PWB, be sure to turn the power switch off and unplug the machine from power.

Even if the power switch of the main unit is turned off and the power cord is unplugged, the electric charge may remain in the capacitors on the Power supply PWB, so that please be careful not to touch the mounted parts to protect you from electric shock.

(1)Self diagnostic error codes

(1-1)Error codes list

Error code/ Contents	Note
C0030: FAX PWB system error (page 7-248)	
C0070: FAX PWB incompatible detection error (page 7-248)	
C0100: Backup memory scanning/writing error (flash memory) (page 7-248)	
C0130: Backup memory reading/writing error (page 7-248)	
C0150: Engine EEPROM reading / writing error (page 7-249)	
C0170: Charger count error (page 7-249)	
C0180: Machine serial number mismatch (page 7-250)	
C0361: Communication error between the engine CPU and the engine ASIC (page 7-250)	
C0362: Communication error between the engine CPU and the Image drive ASIC (page 7-250)	
C0363: Communication error between the engine CPU and the Feed drive ASIC (page 7-251)	
C0364: Communication error between the engine CPU and the Front drive ASIC (page 7-251)	
C0640: Hard Disk error (page 7-251)	
C0650: FAX image storage pair-check error (page 7-252)	
C0660: Hard Disk encryption key error (page 7-252)	
C0670: Hard Disk overwriting error (page 7-252)	
C0680: SSD error (page 7-253)	
C0800: Image processing error (page 7-253)	
C0830: FAX PWB flash program area checksum error (page 7-254)	
C0840: RTC (date/time) error (page 7-254)	
C0850: TPM security chip error (page 7-254)	
C0870: PC FAX Image data transmission error (page 7-254)	
C0920: FAX file system error (page 7-255)	
C0950: FAX job stay error (page 7-255)	
C0980: 24V power interruption detection (page 7-255)	
C1000: MP lift motor error (page 7-256)	
C1010: Lift motor 1 error (page 7-257)	
C1020: Lift motor 2 error (page 7-258)	
C1030: PF lift motor 1 error (page 7-259)	
C1040: PF lift motor 2 error (page 7-260)	
C1140: PF lift motor error (Side feeder) (page 7-261)	
C1420: Inner shift tray error (page 7-261)	

Error code/ Contents	Note
C1750: Bridge unit type mismatch error (page 7-262)	
C1800: Paper feeder/Large capacity feeder communication error (page 7-262)	
C1820: Side feeder communication error (page 7-262)	
C1950: Primary transfer unit EEPROM error (page 7-263)	
C2201: Drum motor K error (page 7-263)	
C2300: Fuser motor error (page 7-264)	
C2500: Feed motor error (page 7-265)	
C2600: PF feed motor error (page 7-266)	
C2600: PF twin motor error (page 7-267)	
C2700: Primary / secondary transfer release error (page 7-268)	
C2760: Developer K/Transfer belt motor error (page 7-269)	
C2810: Waste toner motor error (page 7-270)	
C2840: Belt cleaning motor error (page 7-271)	
C2950: Motor CPU communication error (page 7-271)	
C3100: Carriage error (page 7-272)	
C3200: LED lamp startup error (page 7-273)	
C3210: CIS lamp error (page 7-273)	
C3501: Communication error between the scanner and the ASIC (page 7-274)	
C3502: Communication error between the DP scanner and the ASIC (page 7-274)	
C3600: Scanner sequence error (page 7-274)	
C3800: AFE error (page 7-275)	
C4001: Polygon motor synchronization error (page 7-275)	
C4011: Polygon motor steady-state error (page 7-275)	
C4101: BD signal initialization error (page 7-276)	
C4201: BD signal steady-state error (page 7-276)	
C4600: LSU cleaning motor error (page 7-277)	
C4701: VIDEO ASIC device error (page 7-277)	
C4801: LSU type mismatch error (page 7-277)	
C5101: Main high voltage error (K) (page 7-278)	
C6000: IH heating error1 (page 7-279)	
C6020: Fuser center thermistor high temperature error (page 7-280)	
C6030: Broken fuser center thermistor (page 7-280)	
C6050: Fuser center thermistor low temperature error (page 7-281)	
C6120: Fuser thermistor (lower) high temperature error (page 7-282)	
C6130: Fuser thermistor (upper) broken detection (page 7-282)	
C6200: IH heating error 2 (page 7-283)	
C6220: Fuser edge thermistor high temperature error (page 7-284)	
C6230: Broken fuser edge thermistor (page 7-285)	
C6250: Fuser edge thermistor low temperature error (page 7-286)	
C6320: Fuser middle thermistor high temperature error (page 7-287)	
C6330: Broken fuser middle thermistor (page 7-288)	
C6410: Fuser unit type mismatch error (page 7-288)	
C6600: Fuser belt rotation error (page 7-289)	
C6610: Fuser pressure release sensor error (page 7-290)	
C6620: IH core motor rotation error (page 7-291)	
C6740: IH PWB high temperature error (IGBT2) (page 7-291)	
C6760: IH fuser input excessive electric current error (page 7-292)	

Error code/ Contents	Note
C6770: IH low power error (page 7-293)	
C6900: Fuser edge section cooling fan error (page 7-294)	
C6910: Engine firmware unexpected error (page 7-294)	
C6920: Eject paper/IH front fan motor error (page 7-295)	
C6930: Output paper/IH middle fan motor error (page 7-295)	
C6950: IH PWB communication error (page 7-296)	
C6980: Fuser unit EEPROM error (page 7-297)	
C6990: Fuser power source destination error (page 7-297)	
C7001: Container motor error (page 7-298)	
C7101: T/C sensor K error (page 7-298)	
C7301: Toner motor K error (page 7-299)	
C7320: Toner container connect detection error (page 7-299)	
C7401: Developer unit K type mismatch error (page 7-300)	
C7420: Primary transfer unit type mismatch error (page 7-300)	
C7470: Eject/fuser PI cooling fan motor error (page 7-301)	
C7480: Power source fan motor error (page 7-301)	
C7490: Exit fan motor error (page 7-302)	
C7850: Container left fan motor error (page 7-302)	
C7860: Container right fan motor error (page 7-303)	
C7870: Eject front fan motor error (page 7-303)	
C7880: Eject rear fan motor error (page 7-304)	
C7901: Drum unit K EEPROM error (page 7-304)	
C7911: Developer unit K EEPROM error (page 7-305)	
C7941: LSU EEPROM error 1 (page 7-305)	
C7970: Weight sensor error (page 7-306)	
C8000: Finisher incompatibility detection (page 7-306)	
C8010: PH motor error 1 (page 7-307)	
C8020: PH motor error 2 (page 7-308)	
C8030: PH motor error 3 (page 7-308)	
C8040: Punch slide motor error 1 (page 7-309)	
C8050: Punch slide motor error 2 (page 7-310)	
C8090: DF paddle motor error (page 7-310) Object: Inner finisher (DF-7100), 4000-sheet finisher (DF-7140), 1000-sheet finisher (DF-7120)	
C8090: PH main program error / Punch unit communication error (page 7-311) Object: 100-sheet staple finisher (DF-7150)	
C8100: DF exit release motor error (page 7-311)	
C8110: DF shift motor 2 error (page 7-312)	
C8120: DF shift motor 1 error (page 7-312)	
C8130: DF shift release motor error (page 7-313)	
C8140: DF tray error 1 (page 7-314) Object: 4000-sheet finisher (DF-7140), 1000-sheet finisher (DF-7120), 100-sheet staple finisher (DF-7150)	
C8140: DF tray error 1 (page 7-315) Object: Inner finisher (DF-7100)	
C8150: DF tray error 2 (page 7-315) Object: 1000-sheet finisher (DF-7120)	
C8150: DF tray error 2 (page 7-316) Object: 4000-sheet finisher (DF-7140), 100-sheet staple finisher (DF-7150)	
C8160: DF tray error 3 (page 7-317) Object: 4000-sheet finisher (DF-7140)	
C8160: DF tray error 3 (page 7-318) Object: 1000-sheet finisher (DF-7130)	

Error code/ Contents	Note
C8160: DF tray error 3 (page 7-318) Object: Inner finisher (DF-7100)	
C8170: DF side registration motor 1 error 1 (page 7-319)	
C8180: DF side registration motor 1 error 2 (page 7-319)	
C8190: DF side registration motor 2 error 1 (page 7-320)	
C8200: DF side registration motor 2 error 2 (page 7-320)	
C8210: DF slide motor front/rear error (page 7-321)	
C8230: DF staple motor error 1 (page 7-321)	
C8250: DF tray error 4 (page 7-322)	
C8260: DF middle motor HP detection error (page 7-322)	
C8300: BF main program error / Folding unit communication error (page 7-323)	
C8310: BF side registration motor 2 error (page 7-323)	
C8320: BF adjustment motor error (page 7-324)	
C8330: BF blade error (page 7-324)	
C8040: Punch slide motor error 1 (page 7-309)	
C8350: BF side registration motor 1 error (page 7-325)	
C8360: BF main motor error (page 7-326)	
C8370: BF staple motor error 2 (page 7-326)	
C8380: BF exit pressure release motor error (page 7-327)	
C8390: BF paddle motor error (page 7-327)	
C8400: BF transport tray motor error (page 7-327)	
C8410: PH slide motor error 1 (page 7-328)	
C8420: PH slide motor error 2 (page 7-328)	
C8430: PH main program error/punch unit communication error (page 7-329)	
C8500: MT main program error/mailbox communication error (page 7-329)	
C8510: MB conveying motor error 1 (page 7-329)	
C8520: MB conveying motor error 2 (page 7-330)	
C8600: DF adjusting release motor error (page 7-330)	
C8610: DF withdraw release motor error (page 7-331)	
C8620: DF withdraw pulley pressure release motor error (page 7-331)	
C8630: DF exit release motor error (page 7-332)	
C8640: DF side registration motor 1 error (page 7-332)	
C8650: DF side registration motor 2 error (page 7-333)	
C8700: DF bundle exit motor 1 error (page 7-333)	
C8710: DF bundle exit motor 2 error (page 7-334)	
C8720: DF exit paddle motor error (page 7-334)	
C8730: DF exit paper press motor error (page 7-335)	
C8740: DF exit support guide motor error (page 7-335)	
C8800: DF main program error/communication error between engine and DF (page 7-336)	
C8810: DF - Sub CPU communication error (page 7-336)	
C8B00: Inserter EEPROM error (page 7-336)	
C8B10: IS upper tray lift motor ascending error (page 7-337)	
C8B20: IS upper tray lift motor descending error (page 7-337)	
C8B30: IS lower tray lift motor ascending error (page 7-338)	
C8B40: IS lower tray lift motor descending error (page 7-338)	
C8B80: IS main program error/communication error between the main unit and IS (page 7-339)	
C8E00: Communication error between ZF and DF (page 7-339)	
C8E10: Protective element cutoff error (page 7-339)	

Error code/ Contents	Note
C8E20: Inlet motor error (page 7-340)	
C8E30: Regist front motor error (page 7-340)	
C8E40: Resist motor error (page 7-340)	
C8E50: Folding eject tray motor error (page 7-341)	
C8E60: Paper stacking motor error (page 7-341)	
C8E70: Primary conveying motor error (page 7-341)	
C8E80:Secondary conveying motor error (page 7-342)	
C8E90: Entrance feedshift claw motor error (page 7-342)	
C8EA0: Eject feedshift claw motor error (page 7-342)	
C8EB0: Folding feedshift claw motor error (page 7-343)	
C8EC0: Wrap up prevention motor error (page 7-343)	
C8ED0: Folding motor error (page 7-343)	
C8EE0:Secondary forward/reverse motor error (page 7-344)	
C8EF0: Extra folding motor error (page 7-344)	
C8F00: Sensor power supply error (page 7-344)	
C8F10: ZF IO PWB 1 error (page 7-345)	
C8F20: ZF IO PWB 2 error (page 7-345)	
C9000: DP main program error/document processor communication error (page 7-345)	
C9040: DP lift motor ascend error (page 7-346)	
C9050: DP lift motor descend error (page 7-346)	
C9060: DP EEPROM error (page 7-347)	
C9070: Communication error between DP and DP SHD (page 7-347)	
C9180: DP feed-shift motor error (page 7-348)	
C9200: DP double feed detection communication error (page 7-348)	
C9220: DP double feed detection backup error (page 7-349)	
C9500: Image processing PWB error (Scanner) (page 7-349)	
C9510: Image processing circuit error (DP) (page 7-349)	
C9530: Backup data error (page 7-349)	
C9540: Backup data error (page 7-350)	

(1-2)Content of Self diagnostic

C0030: FAX PWB system error

The FAX processing cannot be continued due to the FAX firmware error.

Step	Check description	Assumed cause	Measures	Reference
1	Reinstalling the FAX PWB	The FAX PWB does not operate properly.	Turn the power switch off and unplug the power plug. After 5sec, reattach the fax PWB, reconnect the power plug, and turn the power switch on.	
2	Firmware upgrade	The firmware is faulty.	Reinstall the FAX firmware.	
3	Replacing the FAX PWB	The FAX PWB is faulty.	Replace the FAX PWB.	

C0070: FAX PWB incompatible detection error

Abnormal detection of FAX control PWB incompatibility in the initial communication with the FAX control PWB, any normal communication command is not transmitted.

Step	Check description	Assumed cause	Measures	Reference
1	Checking the FAX PWB	The incompatible FAX PWB is installed.	Install the FAX PWB for the applicable model.	
2	Firmware upgrade	The FAX firmware is faulty.	Reinstall the FAX firmware.	
3	Replacing the main PWB	The main PWB is faulty.	Replace the main PWB.	

C0100: Backup memory scanning/writing error (flash memory)

An error in writing/scanning backup data in flash memory was detected.

Step	Check description	Assumed cause	Measures	Reference
1	Resetting the power	The flash memory does not operate properly.	Turn off the power switch and pull out the power plug. After passing 5s, reinsert the power plug and turn on the power switch.	
2	Replacing the main PWB	The main PWB is faulty.	Replace the main PWB.	

C0130: Backup memory reading/writing error

- When the power was turned on, an error was detected in the backup data consistency check.

Step	Check description	Assumed cause	Measures	Reference
1	Resetting the power	The flash memory does not operate properly.	Turn off the power switch and pull out the power plug. After passing 5s, reinsert the power plug and turn on the power switch.	
2	Replacing the main PWB	The main PWB is faulty.	Replace the main PWB.	

C0150: Engine EEPROM reading / writing error

- Five times consecutive detection of no response from the device for more than 5ms on reading / writing.
- Data read in 2 places does not match 8 consecutive times.
- Writing data and reading data does not match 8 consecutive times.

Step	Check description	Assumed cause	Measures	Reference
1	Resetting the power	The EEPROM on the engine PWB does not operate properly.	Turn off the power switch and pull out the power plug. After passing 5s, reinsert the power plug and turn on the power switch.	
2	Checking the EEPROM on the engine PWB	The EEPROM is not properly attached.	Reattach the EEPROM on the engine PWB.	
3	Replacing the engine PWB	The engine PWB is faulty.	Replace the engine PWB.	
4	Replacing the EEPROM	The EEPROM on the engine PWB is faulty.	Contact to the service headquarters.	

C0170: Charger count error

The values in one of the billing counters, life counter or the scanner counter mismatch between the main side and the engine side.

Step	Check description	Assumed cause	Measures	Reference
1	Checking the machine serial number on the main PWB	The main PWB for the different main unit is installed.	Check the machine serial numbers of the main PWB and the engine PWB on U004, and if the serial number of the main PWB is different, install the correct main PWB.	
2	Checking the machine serial number of the engine PWB	The EEPROM for the different main unit is installed.	Check the machine serial numbers of the main PWB and the engine PWB on U004, and if the serial number of the engine PWB is different, install the correct EEPRM on the engine PWB.	
3	Checking the EEPROM	The EEPROM is not properly attached.	Reattach the EEPROM on the engine PWB.	
4	Replacing the main PWB	The main PWB is faulty.	Replace the main PWB.	
5	Replacing the engine PWB	The engine PWB is faulty.	Replace the engine PWB.	
6	Replacing the EEPROM	The EEPROM on the engine PWB is faulty.	Contact to the service headquarters.	

C0180: Machine serial number mismatch

Machine serial number mismatch between the main and engine side when turning the power on.

Step	Check description	Assumed cause	Measures	Reference
1	Checking the machine serial number on the main PWB	The main PWB for the different main unit is installed.	Check the machine serial numbers of the main PWB and the engine PWB on U004, and if the serial number of the main PWB is different, install the correct main PWB.	
2	Checking the machine serial number of the engine PWB	The EEPROM for the different main unit is installed.	Check the machine serial numbers of the main PWB and the engine PWB on U004, and if the serial number of the engine PWB is different, install the correct EEPRM on the engine PWB.	
3	Checking the connection	FFC is not connected properly. Or it is faulty.	Clean the FFC terminals of the following FFC and reconnect them. If the FFC terminal is deformed or broken, replace the FFC. • Engine PWB - Main PWB	
4	Replacing the main PWB	The main PWB is faulty.	Replace the main PWB.	
5	Replacing the engine PWB	The engine PWB is faulty.	Replace the engine PWB.	
6	Replacing the EEPROM	The EEPROM on the engine PWB is faulty.	Contact to the service headquarters.	

C0361: Communication error between the engine CPU and the engine ASIC

The communication with the engine ASIC failed 10 times continuously.

Step	Check description	Assumed cause	Measures	Reference
1	Resetting the power	The engine PWB does not operate properly.	Turn off the power switch and pull out the power plug. After passing 5s, reinsert the power plug and turn on the power switch.	
2	Firmware upgrade	The firmware is not the latest version.	Upgrade the engine firmware to the latest version	
3	Replacing the engine PWB	The engine PWB is faulty.	Replace the engine PWB.	

C0362: Communication error between the engine CPU and the Image drive ASIC

The communication with the image drive ASIC failed 10 times continuously.

Step	Check description	Assumed cause	Measures	Reference
1	Resetting the power	The engine PWB does not operate properly.	Turn off the power switch and pull out the power plug. After passing 5s, reinsert the power plug and turn on the power switch.	
2	Firmware upgrade	The firmware is not the latest version.	Upgrade the engine firmware to the latest version	
3	Checking the connection	The connector is not connected properly, or the wire is faulty.	Clean the terminal of the following wire connectors and reconnect the connectors. If there is no continuity, replace the wire. • Image drive PWB - Engine PWB	
4	Replacing the image drive PWB	The image drive PWB is faulty.	Replacing the image drive PWB	
5	Replacing the engine PWB	The engine PWB is faulty.	Replace the engine PWB.	

C0363: Communication error between the engine CPU and the Feed drive ASIC

The communication with the feed drive ASIC failed 10 times continuously.

Step	Check description	Assumed cause	Measures	Reference
1	Resetting the power	The engine PWB does not operate properly.	Turn off the power switch and pull out the power plug. After passing 5s, reinsert the power plug and turn on the power switch.	
2	Firmware upgrade	The firmware is not the latest version.	Upgrade the engine firmware to the latest version	
3	Checking the connection	The connector is not connected properly, or the wire is faulty.	Clean the terminal of the following wire connectors and reconnect the connectors. If there is no continuity, replace the wire. • Feed drive PWB - Engine PWB	
4	Replacing the feed drive PWB	The feed drive PWB is faulty.	Replace the feed drive PWB.	
5	Replacing the engine PWB	The engine PWB is faulty.	Replace the engine PWB.	

C0364: Communication error between the engine CPU and the Front drive ASIC

The communication with the front drive ASIC failed 10 times continuously.

Step	Check description	Assumed cause	Measures	Reference
1	Resetting the power	The engine PWB does not operate properly.	Turn off the power switch and pull out the power plug. After passing 5s, reinsert the power plug and turn on the power switch.	
2	Firmware upgrade	The firmware is not the latest version.	Upgrade the engine firmware to the latest version	
3	Checking the connection	The connector is not connected properly, or the wire is faulty.	Clean the following connector terminal of the wire and reinsert them. If there is no continuity, replace the wire. • Front drive PWB - Image drive PWB • Image drive PWB - Engine PWB	
4	Replacing the front drive PWB	The front drive PWB is faulty.	Replacing the front drive PWB	
5	Replacing the image drive PWB	The image drive PWB is faulty.	Replacing the image drive PWB	
6	Replacing the engine PWB	The engine PWB is faulty.	Replace the engine PWB.	

C0640: Hard Disk error

The HDD cannot be accessed properly.

Step	Check description	Assumed cause	Measures	Reference
1	Releasing the partial operation	The partial operation is executed.	Execute resetting the partial operation at U906.	
2	Replacing the HDD (when abnormal noise occurs)	The HDD is faulty.	Replace the HDD when the abnormal sounds are from the HDD.	
3	Checking the connection	The connector is not connected properly. The SATA cable or the wire is faulty.	Reconnect the connector of the following SATA cable and the wire. If there is no continuity, replace SATA cable or the wire. • HDD - main PWB	
4	Initializing the HDD	The HDD storage data is faulty.	Execute U024 [HDD Format]> [Full]> [Execute].	
5	Replacing the HDD	The HDD is faulty.	Replace the HDD.	
6	Replacing the main PWB	The main PWB is faulty.	Replace the main PWB.	

C0650: FAX image storage pair-check error

The SSD (FAX image storage) used in other machines was installed.

Step	Check description	Assumed cause	Measures	Reference
1	Checking the SSD	The SSD (FAX image storage) already used in other unit is installed.	When installing the SSD used once, replace with the correct SSD.	
2	Executing U671	The SSD (FAX image storage) already used in other unit is reused without executing U671.	When installing a used SSD, execute U671 [FAX Data Clr].	
3	Reinstalling the SSD	The SSD (FAX image storage) is not properly installed.	Be sure to install the SSD to the connector on the main PWB.	
4	Replacing the SSD	The SSD (FAX image storage) is faulty.	Replace with the new SSD.	
5	Replacing the main PWB	The main PWB is faulty.	Replace the main PWB.	

C0660: Hard Disk encryption key error

The encryption code entered when replacing the main PWB is incorrect.

Step	Check description	Assumed cause	Measures	Reference
1	Executing U004 (when it occurs after replacing the main PWB)	The encryption code after replacing the main PWB is faulty.	If it occurs after replacing the main PWB, execute writing the machine serial number on U004.	
2	Replacing the HDD (abnormal sounds)	The HDD is faulty.	Replace the HDD when the abnormal sounds are from the HDD.	
3	Checking the connection	The connector is not connected properly. The SATA cable or the wire is faulty.	Reconnect the connector of the following SATA cable and the wire. If there is no continuity, replace SATA cable or the wire. • HDD - main PWB	
4	Initializing the HDD	The HDD storage data is faulty.	Execute U024 [HDD Format]> [Full]> [Execute].	
5	Replacing the HDD	The HDD is faulty.	Replace the HDD.	
6	Replacing the main PWB	The main PWB is faulty.	Replace the main PWB.	

C0670: Hard Disk overwriting error

The area that cannot be properly overwritten exists in a part of the HDD.

Step	Check description	Assumed cause	Measures	Reference
1	Replacing the HDD (abnormal sounds)	The HDD is faulty.	Replace the HDD when the abnormal sounds are from the HDD.	
2	Checking the connection	The connector is not connected properly. The SATA cable or the wire is faulty.	Reconnect the connector of the following SATA cable and the wire. If there is no continuity, replace SATA cable or the wire. • HDD - main PWB	
3	Initializing the HDD	The HDD storage data is faulty.	Execute U024 [HDD Format]> [Full]> [Execute].	
4	Replacing the HDD	The HDD is faulty.	Replace the HDD.	
5	Replacing the main PWB	The main PWB is faulty.	Replace the main PWB.	

C0680: SSD error

The SSD cannot be accessed, or the error occurs when accessing to the SSD.

Step	Check description	Assumed cause	Measures	Reference
1	Checking SSD (when it lights up after SSD replacement)	An SSD out of specification is installed.	Install the SSD matching the memory capacity specification.	
2	Resetting the power	The SSD is faulty.	Turn off the power switch and pull out the power plug. After passing 5s, reinsert the power plug and turn on the power switch.	
3	Reinstalling the SSD	The connection with the main PWB is faulty.	Reinstall the SSD on the main PWB.	
4	Initializing the SSD	The data stored in the SSD is faulty.	After taking out the data saved on the SSD to the USB drive with U026, initialize the SSD with U024. After that, restore the data backed up to the USB drive with U026.	
5	Replacing the SSD	The SSD is faulty.	After taking out the saved data of SSD to the USB drive with U026, replace the SSD and turn on the power with the USB drive containing the firmware for the corresponding model installed in the machine body. After that, restore the data backed up to the USB drive with U026.	
6	Replacing the main PWB	The main PWB is faulty.	Replace the main PWB.	

C0800: Image processing error

The print sequence jam (J010x) was detected 2 times continuously.

Step	Check description	Assumed cause	Measures	Reference
1	Checking the image data	The image data is faulty.	If it occurs only in specific image data, check if there is any error in the image data. If there is no error in the image data, proceed to the next step. If there is something wrong with the image data, ask the user to print with another image data.	
2	Checking the situation	The printing operation of the certain file is faulty.	If the phenomenon can be reproduced by identifying the job that detected the error, acquire the job log. If the problem persists even after executing the following steps, send the acquired job log to the service headquarters and request an investigation.	
3	Checking the main PWB	The connector or the FFC is not connected properly. Or, the wire, FFC, the PWB is faulty.	Clean the terminal of the connectors on the main PWB, reconnect the connector of the wire, and reconnect the FFC terminal. If the wire or the FFC is faulty, repair or replace them. If not resolved, replace the main PWB.	

C0830: FAX PWB flash program area checksum error

The program stored in the flash memory on the FAX PWB is broken so it cannot perform.

Step	Check description	Assumed cause	Measures	Reference
1	Firmware upgrade	The firmware is faulty.	Reinstall the FAX firmware.	
2	Reinstalling the FAX PWB	The FAX PWB is not connected properly.	Turn the power switch off and unplug the power plug. After 5sec, reattach the fax PWB, reconnect the power plug, and turn the power switch on.	
3	Initializing the Fax PWB	The data in the FAX PWB is faulty.	Execute U600 to initialize the fax PWB.	
4	Replacing the FAX PWB	The FAX PWB is faulty.	Replace the FAX PWB.	

C0840: RTC (date/time) error

Cannot communicate with RTC properly. Or, the RTC data is inconsistent.

Step	Check description	Assumed cause	Measures	Reference
1	Executing U906	The backup battery on the main PWB is faulty, and so, the RTC settings are erased after unplugging the power cord.	Execute U906 to reset the display. After that, set the date and time (RTC) in the system menu.	
2	Replacing the main PWB	The main PWB is faulty, or the backup battery runs out.	If C0840 still occurs after performing the above steps, replace the main PWB.	

C0850: TPM security chip error

After launching the data encryption/overwrite erase application, the TPM cannot be accessed or an error occurred during access.

Step	Check description	Assumed cause	Measures	Reference
1	Resetting the power	The main PWB does not operate properly.	Turn off the power switch and pull out the power plug. After passing 5s, reinsert the power plug and turn on the power switch.	
2	Firmware upgrade	The firmware is not the latest version.	Upgrade the main firmware to the latest version.	
3	Replacing the main PWB	The main PWB is faulty.	Replace the main PWB.	

C0870: PC FAX Image data transmission error

The response is not back within 60s after the FAX PWB send a image transmission request message to the controller.

Step	Check description	Assumed cause	Measures	Reference
1	Reinstalling the FAX PWB	The FAX PWB does not operate properly.	Turn off the power switch and unplug the power plug. After 5sec, reattach the fax PWB, reconnect the power plug, and turn on the power switch.	
2	Initializing the Fax PWB	The data in the FAX PWB is faulty.	Execute U600 to initialize the fax PWB.	
3	Firmware upgrade	The FAX firmware is faulty.	Upgrade the fax firmware to the latest version.	
4	Replacing the FAX PWB	The FAX PWB is faulty.	Replace the FAX PWB.	
5	Replacing the main PWB	The main PWB is faulty.	Replace the main PWB.	
6	Executing U024	The data stored in the SSD is faulty.	Avoid the user registration information on U917 and execute [SSD Format] on U024.	

C0920: FAX file system error

The backup data could not be stored since the file system of the flash memory is faulty.

Step	Check description	Assumed cause	Measures	Reference
1	Reinstalling the FAX PWB	The FAX PWB does not operate properly.	Turn the power switch off and unplug the power plug. After 5sec, reattach the fax PWB, reconnect the power plug, and turn the power switch on.	
2	Initializing the Fax PWB	The data in the FAX PWB is faulty.	Execute U600 to initialize the fax PWB.	
3	Firmware upgrade	The firmware is faulty.	Reinstall the FAX firmware.	
4	Replacing the FAX PWB	The FAX PWB is faulty.	Replace the FAX PWB.	

C0950: FAX job stay error

Print processing of the received FAX could not be executed and the job continues staying.

Step	Check description	Assumed cause	Measures	Reference
1	Resetting the power	The printing process is not properly executed.	Turn off the power switch and pull out the power plug. After passing 5s, reinsert the power plug and turn on the power switch.	
2	Firmware upgrade	The firmware does not properly activate.	Upgrade the main firmware to the latest version.	

C0980: 24V power interruption detection

- A 24V power failure signal was detected continuously for 1sec.
- Another service call occurred 0.1sec after the 24V power failure detection signal is detected and then the 24V power was restored.

Step	Check description	Assumed cause	Measures	Reference
1	Resetting the power	The printing process is not properly executed.	Turn off the power switch and pull out the power plug. After passing 5s, reinsert the power plug and turn on the power switch.	
2	Checking the connection	The connector is not connected properly, or the wire is faulty.	Clean the terminal of the following wire connectors and reconnect the connectors. If there is no continuity, replace the wire. Power supply PWB - Engine PWB	
3	Replacing the Power supply PWB	The Power supply PWB is faulty.	When the +24V generation from the Power supply PWB is not stable, and it lowers, replace the Power supply PWB.	
4	Replacing the engine PWB	The engine PWB is faulty.	Replace the engine PWB.	

C1000: MP lift motor error

- When the MP lift motor rotates in the downward direction, the MP position switch does not turn on within 1.85sec.
- When the MP lift motor rotates in the ascending direction, the MP position switch does not turn off within 1.6sec.

Step	Check description	Assumed cause	Measures	Reference
1	Firmware upgrade	The firmware is not the latest version.	Upgrade the engine firmware to the latest version	
2	Checking the MP lift plate	The MP lift plate does not operate properly.	Repair or replace the MP lift plate on the MP tray when it does not move vertically.	
3	Checking the lift rack	The lift rack is not installed properly.	Check that the lift rack is in a position where it can be moved up and down by the lift motor, and that it is not damaged, and then reinstall it in the proper position. If it is not repaired, replace it.	
4	Checking the drive gear	The drive gear to lift up the MP lift plate does not rotate properly.	Check if the MP lift plate lift-up drive gears rotate smoothly or have no excessive load. And apply the grease (EM-50LP, Part no.: 7BG010009H) to the sliding section and repair the related parts so that they can rotate smoothly.	
5	Checking the connection	The connector is not connected properly, or the wire is faulty.	Clean the following connector terminal of the wire and reinsert them. If there is no continuity, replace the wire. • Main unit - Transfer unit • MP position switch - Feed drive PWB • MP lift motor - Feed drive PWB • Feed drive PWB - Engine PWB	
6	Replacing the MP lift motor	The MP lift motor does not operate properly.	Replace the MP lift motor.	
7	Checking the MP position switch	The MP position switch is not installed properly or it is faulty.	Reinstall the MP position switch. If it is not repaired, replace it.	
8	Replacing the feed drive PWB	The feed drive PWB is faulty.	Replace the feed drive PWB.	
9	Replacing the engine PWB	The engine PWB is faulty.	Replace the engine PWB.	

C1010: Lift motor 1 error

- Any of the following conditions was detected 5 times in a row.
- Even 16sec after inserting the cassette 1, the lift upper limit sensor 1 is not detected as ON.
- After turning on the lift motor 1, the lock signal is not released for 0.3sec.
- After detecting the OFF of the lift upper limit sensor 1 during printing, the lift upper limit sensor 1 does not turn ON even after 1sec has passed from the ascending control.

Step	Check description	Assumed cause	Measures	Reference
1	Firmware upgrade	The firmware is not the latest version.	Upgrade the engine firmware to the latest version	
2	Checking the lift plate	The lift plate does not operate properly.	Repair or replace the lift plate when it does not move vertically.	
3	Checking the drive gear	The drive gear to lift up the lift plate does not rotate properly.	Check if the lift plate lift-up drive gears rotate smoothly or have no excessive load. And apply the grease (EM-50LP, Part no.: 7BG010009H) to the sliding section and repair the related parts so that they can rotate smoothly.	
4	Checking the connection	The connector is not connected properly, or the wire is faulty.	Clean the following connector terminal of the wire and reinsert them. If there is no continuity, replace the wire. • Lift motor 1 - Feed drive PWB • Lift upper limit sensor 1 - Feed drive PWB • Feed drive PWB - Engine PWB	
5	Checking lift motor 1	Lift motor 1 is not installed properly or it is faulty.	Reinstall lift motor 1 and check the operation. If it is not repaired, replace it.	
6	Checking lift sensor 1	Lift upper limit sensor 1 is not properly attached, or it is faulty.	Reinstall the lift upper limit sensor 1. If it is not repaired, replace it.	
7	Replacing the feed drive PWB	The feed drive PWB is faulty.	Replace the feed drive PWB.	
8	Replacing the engine PWB	The engine PWB is faulty.	Replace the engine PWB.	

C1020: Lift motor 2 error

- Any of the following conditions was detected 5 times in a row.
- Even 16sec after inserting the cassette 2, the lift upper limit sensor 2 is not detected as ON.
- After turning on the lift motor 2, the lock signal is not released for 0.3sec.
- After detecting the OFF of the lift upper limit sensor 2 during printing, the lift upper limit sensor 2 does not turn ON even after 1sec has passed from the ascending control.

Step	Check description	Assumed cause	Measures	Reference
1	Firmware upgrade	The firmware is not the latest version.	Upgrade the engine firmware to the latest version	
2	Checking the lift plate	The lift plate does not operate properly.	Repair or replace the lift plate when it does not move vertically.	
3	Checking the drive gear	The drive gear to lift up the lift plate does not rotate properly.	Check if the lift plate lift-up drive gears rotate smoothly or have no excessive load. And apply the grease (EM-50LP, Part no.: 7BG010009H) to the sliding section and repair the related parts so that they can rotate smoothly.	
4	Checking the connection	The connector is not connected properly, or the wire is faulty.	Clean the following connector terminal of the wire and reinsert them. If there is no continuity, replace the wire. • Lift motor 2 - Feed drive PWB • Lift upper limit sensor 2 - Feed drive PWB • Feed drive PWB - Engine PWB	
5	Checking lift motor 2	Lift motor 2 is not installed properly or it is faulty.	Reinstall the lift motor 2 and check the operation. If it is not repaired, replace it.	
6	Checking lift sensor 2	Lift upper limit sensor 2 is not properly attached, or it is faulty.	Reinstall the lift upper limit sensor 2. If it is not repaired, replace it.	
7	Replacing the feed drive PWB	The feed drive PWB is faulty.	Replace the feed drive PWB.	
8	Replacing the engine PWB	The engine PWB is faulty.	Replace the engine PWB.	

C1030: PF lift motor 1 error

PF-7140 (550 sheets x 2):

1. The ON of the PF lift upper limit sensor 1 is not detected even after 16sec have passed since the cassette 3 was inserted.

2. After turning on the PF lift motor 1, the lock signal is not released for 0.3sec.

3. After detecting the OFF of the PF lift upper limit sensor 1 during printing, the PF lift upper limit sensor 1 does not turn ON even after 1sec has passed from the ascending control.

PF-7150 (1,650 sheets x 2):

1. Even if 24sec have passed after inserting the cassette 3, the ON of the PF lift upper limit sensor 1 is not detected.

2. At the start of printing, ON of the PF lift upper limit sensor 1 is not detected even after 3sec have passed from the ascending control.

Step	Check description	Assumed cause	Measures	Reference
1	Checking the PF lift plate	The PF lift plate does not operate properly.	Repair or replace the PF lift plate when it does not move vertically.	
2	Checking the drive gear	The drive gear to lift up the PF lift plate does not rotate properly.	Check if the PF lift plate lift-up drive gears rotate smoothly or have no excessive load. And apply the grease (EM-50LP, Part no.: 7BG010009H) to the sliding section and repair the related parts so that they can rotate smoothly.	
3	Checking the connection	The connector is not connected properly, or the wire is faulty.	Clean the following connector terminal of the wire and reinsert them. If there is no continuity, replace the wire. • PF lift motor 1 - PF PWB • PF lift upper limit sensor 1 - PF PWB	
4	Replace the PF lift motor 1.	PF lift motor 1 is faulty.	Replace PF lift motor 1.	
5	Checking PF lift sensor 1	PF lift upper limit sensor 1 is not properly attached, or it is faulty.	Reattach PF lift upper limit sensor 1. Then, replace it if it is not fixed.	
6	Replacing the PF PWB	The PF PWB is faulty.	Replace the PF PWB.	

C1040: PF lift motor 2 error

PF-7140 (550 sheets x 2):
1. The ON of the PF lift upper limit sensor 2 is not detected even after 16sec have passed since the cassette 4 was inserted.
2. After turning on the PF lift motor 2, the lock signal is not released for 0.3sec.
3. After detecting the OFF of the PF lift upper limit sensor 2 during printing, the ON of the PF lift upper limit sensor 2 is not detected even after 1sec has passed from the ascending control.
PF-7150 (1,650 sheets x 2):
1. The PF lift upper limit sensor 2 is not detected even 24sec after the cassette 4 is inserted.
2. At the start of printing, ON of the PF lift upper limit sensor 2 is not detected even after 3sec have passed from the ascending control.

Step	Check description	Assumed cause	Measures	Reference
1	Checking the PF lift plate	The PF lift plate does not operate properly.	Repair or replace the PF lift plate when it does not move vertically.	
2	Checking the drive gear	The drive gear to lift up the PF lift plate does not rotate properly.	Check if the PF lift plate lift-up drive gears rotate smoothly or have no excessive load. And apply the grease (EM-50LP, Part no.: 7BG010009H) to the sliding section and repair the related parts so that they can rotate smoothly.	
3	Checking the connection	The connector is not connected properly, or the wire is faulty.	Clean the following connector terminal of the wire and reinsert them. If there is no continuity, replace the wire. • PF lift motor 2 - PF PWB • PF lift upper limit sensor 2 - PF PWB	
4	Replacing PF lift motor 2	PF lift motor 2 is faulty.	Replace PF lift motor 2.	
5	Checking PF lift sensor 2	PF lift upper limit sensor 2 is not properly attached, or it is faulty.	Reattach PF lift upper limit sensor 2. Then, replace it if it is not fixed.	
6	Replacing the PF PWB	The PF PWB is faulty.	Replace the PF PWB.	

C1140: PF lift motor error (Side feeder)

- The PF lift upper limit sensor does not turn on even after 30sec have passed since cassette 5 was inserted.
- While the PF lift motor was operating, a lock signal was detected continuously for 0.2sec.
- At the start of printing, the ON of the PF lift upper limit sensor is not detected even after 2sec have passed from the ascending control.

Step	Check description	Assumed cause	Measures	Reference
1	Checking the PF lift plate	The PF lift plate does not operate properly.	Repair or replace the PF lift plate when it does not move vertically.	
2	Checking the drive gear	The drive gear to lift up the PF lift plate does not rotate properly.	Check if the PF lift plate lift-up drive gears rotate smoothly or have no excessive load. And apply the grease (EM-50LP, Part no.: 7BG010009H) to the sliding section and repair the related parts so that they can rotate smoothly.	
3	Checking the connection	The connector is not connected properly, or the wire is faulty.	Clean the following connector terminal of the wire and reinsert them. If there is no continuity, replace the wire. • PF lift motor - PF PWB • PF lift upper limit sensor - PF PWB	
4	Replacing the PF lift motor	The PF lift motor is faulty.	Replace the PF lift motor.	
5	Checking the PF lift upper limit sensor	The PF lift upper limit sensor is not properly attached, or it is faulty.	Reattach the PF lift upper limit sensor. Then, replace it if it is not fixed.	
6	Replacing the PF PWB	The PF PWB is faulty.	Replace the PF PWB.	

C1420: Inner shift tray error

- Any of the following conditions was detected three times in a row.
- The change in the JS tray HP sensor cannot be detected even after 2sec have passed since the inner shift tray started operating.
- Sensor change was detected twice in a row within 0.35sec.

Step	Check description	Assumed cause	Measures	Reference
1	Firmware upgrade	The firmware is faulty.	Reinstall the engine firmware.	
2	Checking the JS tray pulley	The JS tray pulleys are faulty.	Check the rotation of the JS tray roller and clean the surface. If it does not rotate properly, replace it.	
3	Checking the connection	The connector is not connected properly, or the wire is faulty.	Clean the following connector terminal of the wire and reinsert them. If there is no continuity, replace the wire. • JS shift motor - JS PWB • JS tray HP sensor - JS PWB	
4	Checking the JS shift motor	The JS shift motor is faulty.	Check the operation of the JS shift motor, and if it does not work properly, replace it.	
5	Checking the JS tray HP sensor	The JS tray HP sensor is faulty.	Check the operation of the JS tray HP sensor, and if it does not work properly, replace it.	
6	Replacing the JS PWB	The JS PWD are faulty.	Replace the JS PWB.	

C1750: Bridge unit type mismatch error

The connection of the bridge unit (AK-7100) for other models is detected when checking the DF installation status.

Step	Check description	Assumed cause	Measures	Reference
1	Checking the bridge unit	AK-7100 is installed.	Install the AK-7110.	

C1800: Paper feeder/Large capacity feeder communication error

- Communication error was detected 10 times continuously.
- The ready signal is not notified from the paper feeder or the large capacity feeder within 6s after communication starts.

Step	Check description	Assumed cause	Measures	Reference
1	Reattaching the paper feeder or large capacity feeder	The drawer connector of the paper feeder or large capacity feeder is not properly connected to the main unit.	Reattach the paper feeder or large capacity feeder to the main unit.	
2	Firmware upgrade	The firmware is not the latest version.	Upgrade the engine firmware to the latest version	
3	Checking the connection	The connector is not connected properly, or the wire is faulty.	Clean the terminal of the following wire connectors and reconnect the connectors. If there is no continuity, replace the wire. • PF PWB - Engine PWB	
4	Replacing the PF PWB	The PF PWB is faulty.	Replace the PF PWB.	
5	Replacing the engine PWB	The engine PWB is faulty.	Replace the engine PWB.	

C1820: Side feeder communication error

- Communication error was detected 10 times continuously.
- The ready signal is not notified from the side feeder within 6s after communication starts.

Step	Check description	Assumed cause	Measures	Reference
1	Reattachment of side feeder	The drawer connector of the side feeder and the paper feeder, or the side feeder and the large capacity feeder is not properly connected.	Reattach the side feeder.	
2	Firmware upgrade	The firmware is not the latest version.	Upgrade the engine firmware to the latest version	
3	Checking the connection	The connector is not connected properly, or the wire is faulty.	Clean the following connector terminal of the wire and reinsert them. If there is no continuity, replace the wire. • PF PWB (side feeder) - PF PWB (paper feeder or large capacity feeder) • PF PWB (paper feeder or large capacity feeder) - engine PWB	
4	Replacing the PF PWB (side feeder)	The PF PWB is faulty.	Replace the PF PWB of the side feeder.	
5	Replacing the PF PWB (paper feeder or large capacity feeder)	The PF PWB is faulty.	Replace the paper feeder or the PF PWB of the large capacity feeder.	
6	Replacing the engine PWB	The engine PWB is faulty.	Replace the engine PWB.	

C1950: Primary transfer unit EEPROM error

- Five times consecutive detection of no response from the device for more than 5ms on reading / writing.
- Data read in 2 places does not match 8 consecutive times.
- Writing data and reading data does not match 8 consecutive times.

Step	Check description	Assumed cause	Measures	Reference
1	Reinstalling the primary transfer unit	The primary transfer unit is not properly installed.	Reinstall the primary transfer unit.	
2	Checking the connection	The connector is not connected properly, or the wire is faulty.	Clean the following connector terminal of the wire and reinsert them. If there is no continuity, replace the wire. • Primary transfer unit (transfer PWB) - Transfer connection PWB • Transfer connection PWB - Image drive PWB • Image drive PWB - Engine PWB	
3	Replacing the primary transfer unit	The primary transfer unit is faulty.	Replace the primary transfer unit.	
4	Replacing the transfer connection PWB	The transfer connection PWB is faulty.	Replace the transfer connection PWB.	
5	Replacing the image drive PWB	The image drive PWB is faulty.	Replacing the image drive PWB	
6	Replacing the engine PWB	The engine PWB is faulty.	Replace the engine PWB.	

C2201: Drum motor K error

- After starting the drum motor K, it does not become stable even after 2sec have passed.
- The ready signal is inactive even after 2sec have passed since the drum motor K became stable.

Step	Check description	Assumed cause	Measures	Reference
1	Firmware upgrade	The firmware is not the latest version.	Please upgrade the engine firmware and motor CPU firmware to the latest version.	
2	Checking the drum unit and the developer unit	The drum unit is faulty.	Check if the drum or drum screw rotates manually, and if it does not rotate, replace the drum unit K.	
3	Checking the connection	The connector is not connected properly, or the wire is faulty.	Clean the terminal of the following wire connectors and reconnect the connectors. If there is no continuity, replace the wire. • Drum motor K - Image drive PWB • Image drive PWB - Engine PWB	
4	Checking drum motor K	Drum motor K is faulty.	Execute U030 [Drum K]. If the drum motor K does not work properly, reinstall it. If it is not repaired, replace it.	
5	Checking the drum drive	The drive from the drum motor K is not transmitted properly.	Check that the drive transmission gear of the drum motor K is rotating and that the load is not extremely heavy, and apply grease (EM-50LP .. Part number: 7BG010009H) to the sliding part. If it does not repair, replace the main drive unit.	
6	Replacing the image drive PWB	The image drive PWB is faulty.	Replacing the image drive PWB	
7	Replacing the engine PWB	The engine PWB is faulty.	Replace the engine PWB.	

C2300: Fuser motor error

While driving the fuser motor, the ready signal is at H level for 1.5sec continuously.

Step	Check description	Assumed cause	Measures	Reference
1	Firmware upgrade	The firmware is not the latest version.	Upgrade the engine firmware to the latest version	
2	Checking the fuser motor	The fuser motor operation is faulty.	Execute U030 [Fuser] and check the operation of the fuser motor. Check if the drive gear rotates and the load is not extremely heavy, and apply grease (EM-50LP .. part number: 7BG010009H) to the sliding part to correct the part.	
3	Checking the connection	The connector is not connected properly, or the wire is faulty.	Clean the terminal of the following wire connectors and reconnect the connectors. If there is no continuity, replace the wire. • Fuser motor - Feed drive PWB • Feed drive PWB - Engine PWB	
4	Checking the main high voltage PWB	The main high voltage contact is dirty or deformed.	Clean the main high voltage contacts. Or correct it so that it is firmly grounded.	Main high voltage contacts (Main high voltage PWB) (page 7-453)
5	Checking the transfer high voltage PWB	The transfer high voltage contacts are dirty or deformed.	Clean the transfer high voltage contacts. Or correct it so that it is firmly grounded.	Transfer high voltage contacts (Transfer high voltage PWB) (page 7-454)
6	Checking the ground plate fuser screw	The ground path of the secondary transfer and separation bias is not connected correctly.	Check the ground plate fuser screw near the base of the rear arm of the machine for assembling the right cover, and if it is loose, retighten it.	(7) Refastening the screw for fixing the ground plate (page 7-456)
7	Checking the fuser discharge needles unit	Foreign objects are mixed in or the foreign objects are attached to the fuser static elimination needle unit.	If foreign objects are mixed or adhered to the fixed static elimination needle unit, clean it to remove the foreign objects.	
8	Replacing the fuser unit	The fuser unit is faulty.	Replace the fuser unit.	
9	Replacing the fuser drive unit	The fuser drive unit is faulty.	Replace the fuser drive unit.	
10	Replacing the feed drive PWB	The feed drive PWB is faulty.	Replace the feed drive PWB.	
11	Replacing the engine PWB	The engine PWB is faulty.	Replace the engine PWB.	

C2500: Feed motor error

The ready condition (rotation stable) does not occur even after 2sec have passed since the paper feed motor started to be driven.

Step	Check description	Assumed cause	Measures	Reference
1	Firmware upgrade	The firmware is faulty.	Upgrade the engine firmware to the latest version	
2	Checking the paper feed drive	The drive transmission of the feed motor is faulty.	Execute U030 [Feed] and check the operation of the paper feed motor. Check if the paper feed roller and drive gear rotate and if the load is extremely heavy, and apply grease (EM-50LP .. part number: 7BG010009H) to the sliding part to correct the part. please. If it does not repair, replace the drive gear in the paper feed drive unit.	
3	Checking the connection	The connector is not connected properly, or the wire is faulty.	Clean the following connector terminal of the wire and reinsert them. If there is no continuity, replace the wire. • Paper feed motor - Feed drive PWB • Feed drive PWB - Engine PWB	
4	Checking the main high voltage PWB	The main high voltage contact is dirty or deformed.	Clean the main high voltage contacts. Or correct it so that it is firmly grounded.	Main high voltage contacts (Main high voltage PWB) (page 7-453)
5	Checking the transfer high voltage PWB	The transfer high voltage contacts are dirty or deformed.	Clean the transfer high voltage contacts. Or correct it so that it is firmly grounded.	Transfer high voltage contacts (Transfer high voltage PWB) (page 7-454)
6	Checking the ground plate fuser screw	The ground path of the secondary transfer and separation bias is not connected correctly.	Check the ground plate fuser screw near the base of the rear arm of the machine for assembling the right cover, and if it is loose, retighten it.	(7) Refastening the screw for fixing the ground plate (page 7-456)
7	Checking the fuser discharge needles unit	Foreign objects are mixed in or the foreign objects are attached to the fuser static elimination needle unit.	If foreign objects are mixed or adhered to the fixed static elimination needle unit, clean it to remove the foreign objects.	
8	Replacing the feed motor	The feed motor is faulty.	Replace the feed motor.	
9	Replacing the feed drive PWB	The feed drive PWB is faulty.	Replace the feed drive PWB.	
10	Replacing the engine PWB	The engine PWB is faulty.	Replace the engine PWB.	

C2600: PF feed motor error

The ready condition (stable rotation) does not occur even after 1sec has passed since the PF paper feed motor was started. (Paper feeder or large capacity feeder)

Step	Check description	Assumed cause	Measures	Reference
1	Firmware upgrade	The firmware is faulty.	Upgrade the engine firmware and the PF firmware to the latest version.	
2	Checking the PF paper feed drive unit	The PF feed motor is not properly connected, or The drive transmission section is faulty.	Execute U247 [2PF] or [LCF]> [Motor]> [On] and check the paper feed operation. If it is not working properly, reconnect the PF paper feed motor connector. Check that the PF paper feed roller and drive gear rotate and that the load is not extremely heavy, and apply grease (EM-50LP .. part number: 7BG010009H) to the sliding part to correct the part. please.	
3	Checking the connection	The connector is not connected properly, or the wire is faulty.	Clean the terminal of the following wire connectors and reconnect the connectors. If there is no continuity, replace the wire. • PF feed motor - PF PWB • PF PWB - Engine PWB (Drawer connector between the paper feeder and the main unit)	
4	Replacing the PF feed motor	The PF feed motor is faulty.	Replace the PF feed motor.	
5	Replacing the PF PWB	The PF PWB is faulty.	Replace the PF PWB.	
6	Replacing the engine PWB	The engine PWB is faulty.	Replace the engine PWB.	

C2600: PF twin motor error

The ready condition (stable rotation) does not occur even after 1sec has passed since the PF transfer motor was started. (Side feeder)

Step	Check description	Assumed cause	Measures	Reference
1	Firmware upgrade	The firmware is faulty.	Upgrade the engine firmware and the PF firmware to the latest version.	
2	Checking the PF paper feed drive unit	The PF transfer motor is not connected properly, or there is something wrong with the drive transmission.	Execute U247 [Side Deck]> [Motor]> [On] and check the paper feed operation. If it is not working properly, reconnect the connector of the PF transfer motor. Check that the PF paper feed roller and drive gear rotate and that the load is not extremely heavy, and apply grease (EM-50LP .. part number: 7BG010009H) to the sliding part to correct the part. please.	
3	Checking the connection	The connector is not connected properly, or the wire is faulty.	Clean the following connector terminal of the wire and reinsert them. If there is no continuity, replace the wire. • PF transfer motor - PF PWB • PF PWB - PF PWB (paper feeder or large capacity feeder) • PF PWB (paper feeder or large capacity feeder) - Engine PWB (connection drawer between PF and main unit)	
4	Replace PF conveying motor	The PF conveying motor is faulty.	Replace the PF conveying motor.	
5	Replacing the PF PWB	The PF PWB of the side feeder is faulty.	Replace the PF PWB of the side feeder.	
6	Replacing the PF PWB (paper feeder or large capacity feeder)	Paper feeder ,or Large capacity feeder of the PF PWB is faulty.	Replace the paper feeder or the PF PWB of the large capacity feeder.	
7	Replacing the engine PWB	The engine PWB is faulty.	Replace the engine PWB.	

C2700: Primary / secondary transfer release error

The belt release motor was driven in the pressing direction, and the release condition continued for 60 mm or more. Or, the belt release motor was driven in the release direction, and the pressing condition continued for 60 mm or more.

Step	Check description	Assumed cause	Measures	Reference
1	Firmware upgrade	The engine firmware is faulty.	Upgrade the engine firmware to the latest version	
2	Checking the drive parts	The drive transmission of the belt release motor is faulty.	Execute U030 [Belt Lift]. If the drive from the belt release motor is not being transmitted, correct the drive transmission.	
3	Checking the connection	The connector is not connected properly, or the wire is faulty.	Clean the terminal of the following wire connectors and reconnect the connectors. If there is no continuity, replace the wire. • Belt release motor - Image drive PWB • Belt release sensor - Image drive PWB • Image drive PWB - Engine PWB • Image drive PWB - Power supply PWB	
4	Checking the belt release sensor	The belt release sensor comes off,or it is faulty.	Remove the main drive unit and reattach the belt release sensor. Or, replace the main drive unit.	
5	Checking the belt release motor	The belt release motor is not operated correctly.	Reattach or replace the belt release motor.	
6	Replacing the primary transfer unit	The primary transfer roller lift-up drive section is faulty.	Replace the primary transfer unit.	
7	Image drive PWB replacement	The image drive PWB is faulty.	Replacing the image drive PWB	
8	Replacing the engine PWB	The engine PWB is faulty.	Replace the engine PWB.	
9	Replacing the Power supply PWB	The Power supply PWB is faulty.	Replace the Power supply PWB.	

C2760: Developer K/Transfer belt motor error

- It does not become stable even after 2sec have passed since the motor was started.
- After the motor became stable, the target speed was out of ± 6.25% for 2sec.
- The FG pulse of the motor is not input continuously for 2sec while the motor is driving.
- FG pulses exceeding 5kHz were detected 10 times in a row.
- I received a notification to switch the direction of rotation while driving.

Step	Check description	Assumed cause	Measures	Reference
1	Firmware upgrade	The firmware is faulty.	Please upgrade the engine firmware and motor CPU firmware to the latest version.	
2	Replacing the primary transfer unit	The transfer belt is faulty.	Check if the belt part of the primary transfer unit rotates, and if it does not rotate, replace the primary transfer unit.	
3	Checking the developer K/ transfer belt motor drive transmission section	The drive transmission of the developer K/transfer belt motor is faulty.	Execute U030 [DLP (K)] and turn the drive gear, rollers, and belt to check if the load is extremely heavy. After that, clean the drive unit of the primary transfer unit.	
4	Checking the connection	The connector is not connected properly, or the wire is faulty.	Clean the terminal of the following wire connectors and reconnect the connectors. If there is no continuity, replace the wire. • Developer K/Transfer belt motor - Image drive PWB • Image drive PWB - Engine PWB	
5	Checking the developer K/ transfer belt motor	The developer K/transfer belt motor is faulty.	Reattach the developer K/transfer belt motor and reconnect the connector. If not repaired, replace it.	
6	Replacing the image drive PWB	The image drive PWB is faulty.	Replacing the image drive PWB	
7	Replacing the engine PWB	The engine PWB is faulty.	Replace the engine PWB.	

C2810: Waste toner motor error

- A disconnection of the connector of the waste toner motor was detected.
- The L level cannot be detected even if the retry is executed 3 times.
- The lock signal of the discarded toner motor was detected.
- L level was detected 3 times.

Step	Check description	Assumed cause	Measures	Reference
1	Firmware upgrade	The engine firmware is faulty.	Upgrade the engine firmware to the latest version	
2	Checking the waste toner box	The waste toner box is not properly installed.	Reinstall the waste toner box.	
3	Checking the waste toner motor	The waste toner motor does not operate properly.	Execute U030 [Toner Recovery]. If the waste toner motor does not work properly, reinstall the waste toner motor and reinsert the connector.	
4	Checking the drive gear	The drive gear does not rotate properly.	Turn the drive gear of the waste toner box unit (connected to the waste toner motor) and check if the load is extremely heavy. If the rotation is heavy, clean the drive gear, bearings, etc.	
5	Checking the connection	The connector is not connected properly, or the wire is faulty.	Clean the terminal of the following wire connectors and reconnect the connectors. If there is no continuity, replace the wire. • Waste toner motor - Engine PWB	
6	Replacing the waste toner box	The waste toner box is faulty.	Replace the waste toner box.	
7	Replacing the waste toner motor	The waste toner motor is faulty.	Replace the waste toner motor.	
8	Replacing the engine PWB	The engine PWB is faulty.	Replace the engine PWB.	
9	Replacing the waste toner box unit	The waste toner box unit is faulty.	Replace the waste toner box unit.	

C2840: Belt cleaning motor error

- It does not become stable even after 2sec have passed since the motor was started.
- After the motor became stable, the target speed was out of ± 6.25% for 2sec.
- The FG pulse of the motor is not input continuously for 2sec while the motor is driving.
- FG pulses exceeding 5kHz were detected 10 times in a row.

Step	Check description	Assumed cause	Measures	Reference
1	Firmware upgrade	The firmware is faulty.	Please upgrade the engine firmware and motor CPU firmware to the latest version.	
2	Reinstalling the primary transfer unit	The primary transfer unit is not properly installed.	Reinstall the primary transfer unit.	
3	Cleaning the primary transfer cleaning section	The roller in the primary transfer cleaning section does not rotate properly.	Remove the waste toner remaining in the primary transfer cleaning section.	
4	Checking the connection	The connector is not connected properly, or the wire is faulty.	Clean the terminal of the following wire connectors and reconnect the connectors. If there is no continuity, replace the wire. • Belt cleaning motor - Transfer PWB • Transfer PWB - Transfer connect PWB • Transfer connect PWB - Image drive PWB • Image drive PWB - Engine PWB	
5	Checking the belt cleaning motor	The belt cleaning motor does not operate properly.	Execute U030 [Belt Clean]. If the belt cleaning motor does not work properly, reinstall it. If it is not repaired, replace it.	
6	Replacing the primary transfer unit	The cleaning drive section of the primary transfer unit and the transfer PWB is faulty.	Replace the primary transfer unit.	
7	Replacing the transfer connection PWB	The transfer connection PWB is faulty.	Replace the transfer connection PWB.	
8	Replacing the image drive PWB	The image drive PWB is faulty.	Replacing the image drive PWB	
9	Replacing the engine PWB	The engine PWB is faulty.	Replace the engine PWB.	

C2950: Motor CPU communication error

- After the communication error, the communication error was detected 10 times in a row.
- The motor CPU side could not receive the command for more than 1sec.

Step	Check description	Assumed cause	Measures	Reference
1	Resetting the power	The engine PWB does not operate properly.	Turn off the power switch and pull out the power plug. After passing 5s, reinsert the power plug and turn on the power switch.	
2	Firmware upgrade	The firmware is not the latest version.	Please upgrade the engine firmware and motor CPU firmware to the latest version.	
3	Checking the connection	The connector is not connected properly, or the wire is faulty.	Clean the terminal of the following wire connectors and reconnect the connectors. If there is no continuity, replace the wire. • Image drive PWB - Engine PWB	
4	Replacing the image drive PWB	The image drive PWB is faulty.	Replacing the image drive PWB	
5	Replacing the engine PWB	The engine PWB is faulty.	Replace the engine PWB.	

C3100: Carriage error

- When any of the following errors is detected, this service call is turned on when an error is detected even if it is retried three times.
- At the time of initial operation, the HP sensor does not turn on even if a predetermined pulse elapses while the HP sensor is off.
- At the time of initial operation, the HP sensor does not turn off even if a predetermined pulse elapses while the HP sensor is on.

Step	Check description	Assumed cause	Measures	Reference
1	Unlocking the scanner mirror frame	The scanner mirror frame is not unlocked.	Release the fuser of the optical mirror frame.	
2	Firmware upgrade	The firmware is not the latest version.	Upgrade the engine firmware to the latest version	
3	Removing foreign objects and applying the grease	A load is applied to the scanner movement.	Confirm the operation of the mirror unit by executing U073 or moving by manual operation. If there is a heavy load on it, check whether there are any foreign objects on the scanner wire or the scanner wire drum, and then clean it. After that, apply grease (PG-671) on the scanner rail.	
4	Checking the scanner wires	The scanner wire comes off.	Reattach the scanner wire.	
5	Checking the belt tension of the scanner motor	A load is applied to the scanner movement since the belt tension is improper.	Adjust the scanner motor belt tension properly.	
6	Checking the connection	The connector is not connected properly, or the wire is faulty.	Clean the terminal of the following wire connectors and reconnect the connectors. If there is no continuity, replace the wire. • Scanner motor - Engine PWB • Home position sensor - Engine PWB	
7	Checking the scanner motor	The scanner motor is not attached properly or faulty.	Reattach the scanner motor. If not repaired, replace it.	
8	Checking the home position sensor	The home position sensor is not attached properly or faulty.	Reattach the home position sensor. If not repaired, replace it.	
9	Replacing the engine PWB	The engine PWB is faulty.	Replace the engine PWB.	

C3200: LED lamp startup error

- At the time of initial operation, the peak value of the white reference data is small.
- During the initial operation, the peak value of the black reference data is large.

Step	Check description	Assumed cause	Measures	Reference
1	Firmware upgrade	The firmware is faulty.	Upgrade the engine firmware to the latest version	
2	Checking the LED lamp	The LED lamp does not light.	Execute U061 [CCD] and check if the LED lamp lights up. If the LED lamp is not lit, replace the lamp unit. After that, execute [Table (ChartA)] of U411.	
3	Checking the white standard sheet	The white reference sheet is dirty or scratched.	Check the white reference sheet on the back of the size detection plate of the original glass. If it is dirty or scratched, clean it or replace it.	
4	Checking the connection	FFC is not connected properly. Or it is faulty.	Clean the following FFC terminal of the FFC and reconnect it. If the FFC terminal is deformed or the FFC is broken, replace the FFC. • Image sensor PWB - Main PWB • LED drive PWB - Image sensor PWB	
5	Replacing the lens unit	The image sensor PWB is faulty.	Replace the lens unit and execute U411.	
6	Replacing the main PWB	The main PWB is faulty.	Replace the main PWB.	

C3210: CIS lamp error

The black peak value when the CIS lamp is lit is large. Or, the block average value is small. (Dual scan DP)

Step	Check description	Assumed cause	Measures	Reference
1	Releasing the partial operation	The partial operation is executed.	Execute resetting the partial operation at U906.	
2	Firmware upgrade	The firmware is faulty.	Upgrade the DP firmware to the latest version.	
3	Checking the DPCIS	The CIS lamp does not light.	Execute U061 [CIS] and check if the CIS lamp lights up. If the CIS lamp does not light up, replace the DCISS.	
4	Cleaning the CIS glass and the CIS roller	The CIS glass or the CIS roller is dirty.	Clean the CIS glass and the CIS roller.	
5	Checking the DPSHD PWB	The DPSHD PWB is not properly connected.	Reconnect the DPSHD PWB to the DPCIS.	
6	Checking the DP relay PWB	The DP relay PWB is not installed properly.	Reattach the DP relay PWB to the main PWB.	
7	Checking the connection	The connector is not connected properly. Or, the wire or the SATA cable is faulty.	Clean the following wire and the connector terminal of the SATA cable, and then reinsert them. If there is no continuity, replace the wire or SATA cable. • DPSHD PWB - DP PWB • DP PWB - Engine PWB • DPSHD PWB - DP relay PWB	
8	Replacing the DPSHD PWB	The DPSHD PWB is faulty.	Replace the DPSHD PWB.	
9	Replacing the DP PWB	The DP PWB is faulty.	Replace the DP PWB.	
10	Replacing the DP relay PWB	The DP relay PWB is faulty.	Replace the DP relay PWB.	
11	Replacing the engine PWB	The engine PWB is faulty.	Replace the engine PWB.	
12	Replacing the main PWB	The main PWB is faulty.	Replace the main PWB.	

C3501: Communication error between the scanner and the ASIC

There is a communication error between the scanner and the ASIC.

Step	Check description	Assumed cause	Measures	Reference
1	Firmware upgrade	The firmware is faulty.	Upgrade the firmware to the latest version.	
2	Checking the connection	FFC is not connected properly. Or it is faulty.	Clean the FFC terminals of the following FFC and reconnect them. If the FFC terminal is deformed or broken, replace the FFC. • Engine PWB - Main PWB	
3	Replacing the engine PWB	The engine PWB is faulty.	Replace the engine PWB.	
4	Replacing the main PWB	The main PWB is faulty.	Replace the main PWB.	

C3502: Communication error between the DP scanner and the ASIC

There is a communication error between the DP scanner and the ASIC. (Dual scan DP)

Step	Check description	Assumed cause	Measures	Reference
1	Releasing the partial operation	The partial operation is executed.	Execute resetting the partial operation at U906.	
2	Firmware upgrade	The firmware is faulty.	Upgrade the firmware to the latest version.	
3	Checking the DP relay PWB	The DP relay PWB is not installed properly.	Reattach the DP relay PWB to the main PWB.	
4	Checking the connection	The connector is not connected properly. Or, the wire or the SATA cable is faulty.	Clean the following wire and the connector terminal of the SATA cable, and then reinsert them. If there is no continuity, replace the wire or SATA cable. • DPSHD PWB - DP PWB • DP PWB - Engine PWB • DPSHD PWB - DP relay PWB	
5	Replacing the DPSHD PWB	The DPSHD PWB is faulty.	Replace the DPSHD PWB.	
6	Replacing the DP PWB	The DP PWB is faulty.	Replace the DP PWB.	
7	Replacing the DP relay PWB	The DP relay PWB is faulty.	Replace the DP relay PWB.	
8	Replacing the engine PWB	The engine PWB is faulty.	Replace the engine PWB.	
9	Replacing the main PWB	The main PWB is faulty.	Replace the main PWB.	

C3600: Scanner sequence error

The program internal processing error of the scanner sequence occurs.

Step	Check description	Assumed cause	Measures	Reference
1	Executing U021	The memory operation is faulty.	Execute U021.	
2	Replacing the engine PWB	The engine PWB is faulty.	Replace the engine PWB.	
3	Replacing the main PWB	The main PWB is faulty.	Replace the main PWB.	

C3800: AFE error

At the time of writing, the written data and the scanning data do not match three times in a row. Or, there is no response from AFE for 0.1sec.

Step	Check description	Assumed cause	Measures	Reference
1	Checking the connection	FFC is not connected properly. Or it is faulty.	Clean the FFC terminals of the following FFC and reconnect them. If the FFC terminal is deformed or broken, replace the FFC. • Image sensor PWB - Main PWB	
2	Replacing the lens unit	The image sensor PWB is faulty.	Replace the lens unit and execute U411.	
3	Replacing the main PWB	The main PWB is faulty.	Replace the main PWB.	

C4001: Polygon motor synchronization error

The ready signal is not at the L level after passing 15s since the polygon motor drive was started.

Step	Check description	Assumed cause	Measures	Reference
1	Firmware upgrade	The engine firmware is faulty.	Upgrade the engine firmware to the latest version	
2	Checking the connection	The connector or FFC is not connected properly. Or, the wire or FFC is faulty.	Clean the following connector terminal of the wire and the FFC terminal, and reconnect the connector and FFC. If there is something wrong with the wire or FFC, replace it. • LSU (APC PWB) - Video PWB • Video PWB - Main PWB • LSU (APC PWB) -Engine PWB	
3	Checking the LSU	The polygon motor does not rotate properly.	Check the rotation sound of the polygon motor, and if it is not rotating properly, reinstall the LSU. If it is not repaired, replace it.	
4	Replacing the Video PWB	The video PWB is faulty.	Replace the video PWB.	
5	Replacing the main PWB	The main PWB is faulty.	Replace the main PWB.	
6	Replacing the engine PWB	The engine PWB is faulty.	Replace the engine PWB.	

C4011: Polygon motor steady-state error

The ready signal is at the H level for 15s continuously after the polygon motor drive becomes stable.

Step	Check description	Assumed cause	Measures	Reference
1	Firmware upgrade	The engine firmware is faulty.	Upgrade the engine firmware to the latest version	
2	Checking the connection	The connector or FFC is not connected properly. Or, the wire or FFC is faulty.	Clean the following connector terminal of the wire and the FFC terminal, and reconnect the connector and FFC. If there is something wrong with the wire or FFC, replace it. • LSU (APC PWB) - Video PWB • Video PWB - Main PWB • LSU (APC PWB) -Engine PWB	
3	Checking the polygon motor	The polygon motor does not rotate properly.	Check the rotation sound of the polygon motor, and reattach or replace the LSU if it does not rotate properly.	
4	Replacing the Video PWB	The video PWB is faulty.	Replace the video PWB.	
5	Replacing the main PWB	The main PWB is faulty.	Replace the main PWB.	
6	Replacing the engine PWB	The engine PWB is faulty.	Replace the engine PWB.	

C4101: BD signal initialization error

BD signal cannot be detected after forced flash.

Step	Check description	Assumed cause	Measures	Reference
1	Firmware upgrade	The engine firmware is faulty.	Upgrade the engine firmware to the latest version	
2	Checking the connection	FFC is not connected properly. Or, FFC is faulty.	Clean the following connector terminal of the wire and the FFC terminal, and reconnect the connector and FFC. If there is something wrong with the wire or FFC, replace it. • LSU (APC PWB) - Video PWB • Video PWB - Main PWB • LSU (APC PWB) -Engine PWB	
3	Checking the LSU	The BD sensor or laser diode on the PD PWB is faulty.	Reattach or replace the LSU.	
4	Replacing the Video PWB	The video PWB is faulty.	Replace the video PWB.	
5	Replacing the main PWB	The main PWB is faulty.	Replace the main PWB.	
6	Replacing the engine PWB	The engine PWB is faulty.	Replace the engine PWB.	

C4201: BD signal steady-state error

BD signal cannot be detected while the laser is lit.

Step	Check description	Assumed cause	Measures	Reference
1	Firmware upgrade	The engine firmware is faulty.	Upgrade the engine firmware to the latest version	
2	Checking the connection	FFC is not connected properly. Or, FFC is faulty.	Clean the following connector terminal of the wire and the FFC terminal, and reconnect the connector and FFC. If there is something wrong with the wire or FFC, replace it. • LSU (APC PWB) - Video PWB • Video PWB - Main PWB • LSU (APC PWB) -Engine PWB	
3	Checking the LSU	The BD sensor or laser diode on the PD PWB is faulty.	Reattach or replace the LSU.	
4	Replacing the Video PWB	The video PWB is faulty.	Replace the video PWB.	
5	Replacing the main PWB	The main PWB is faulty.	Replace the main PWB.	
6	Replacing the engine PWB	The engine PWB is faulty.	Replace the engine PWB.	

C4600: LSU cleaning motor error

After detecting the lock of the LSU cleaning motor, it was reversed and the lock was detected again.

Step	Check description	Assumed cause	Measures	Reference
1	Firmware upgrade	The firmware is not the latest version.	Upgrade the engine firmware to the latest version	
2	Executing the Laser Scanner Cleaning	The LSU cleaning drive gear and the cleaning pad have the load and so they are not shifted smoothly.	Execute Laser Scanner Cleaning.	
3	Cleaning the LSU cleaning drive gear and the cleaning pad	The LSU cleaning drive gear and the cleaning pad have the load and so they are not shifted smoothly.	Clean the LSU cleaning drive gear and the cleaning pad.	
4	Checking the connection	The connector is not connected properly, or the wire is faulty.	Clean the following connector terminals of the wire and reconnect the connector. If there is something wrong with the wire, replace it. • LSU (APC PWB) - Engine PWB	
5	Replacing the LSU	The component parts in the LSU (LSU cleaning drive gear, cleaning pad, LSU cleaning motor) are faulty.	Replace the LSU.	
6	Replacing the engine PWB	The engine PWB is faulty.	Replace the engine PWB.	

C4701: VIDEO ASIC device error

Communication with VIDEO ASIC failed 10 times in a row.

Step	Check description	Assumed cause	Measures	Reference
1	Resetting the power	The ASIC operation on the engine is faulty.	Turn off the power switch and pull out the power plug. After passing 5s, reinsert the power plug and turn on the power switch.	
2	Firmware upgrade	The firmware is not the latest version.	Upgrade the main firmware and the engine firmware to the latest version.	
3	Checking the connection	FFC is not connected properly. Or it is faulty.	Clean the following FFC terminal of the FFC and reconnect it. If the FFC terminal is deformed or the FFC is broken, replace it. • Engine PWB - Main PWB	
4	Replacing the main PWB	The main PWB is faulty.	Replace the main PWB.	
5	Replacing the engine PWB	The engine PWB is faulty.	Replace the engine PWB.	

C4801: LSU type mismatch error

The LSU mismatches with the main unit.

Step	Check description	Assumed cause	Measures	Reference
1	Checking the LSU	The different type LSU is installed.	Install the correct LSU.	
2	Checking the connection	FFC is not connected properly. Or it is faulty.	Clean the following connector terminal of the wire and the FFC terminal, and reconnect the connector and FFC. If there is something wrong with the wire or FFC, replace it. • LSU (APC PWB) - Video PWB • Video PWB - Main PWB	
3	Replacing the LSU	The APC PWB is faulty.	Replace the LSU.	

C5101: Main high voltage error (K)

When adjusting the bias applied by the MC roller, the difference in the inflow current value is small.

Step	Check description	Assumed cause	Measures	Reference
1	Firmware upgrade	The firmware is not the latest version.	Upgrade the engine firmware to the latest version	
2	Reinstalling the main high voltage PWB	Proper current does not flow as the MC roller contact point of the main high voltage PWB is not properly contacted.	Reinstall the main high voltage PWB.	
3	Checking the main charger roller unit	A proper current does not flow because foreign objects etc. are attached to the high voltage contact of the charger roller unit.	Clean the high-pressure contacts of the charger roller unit and apply conductive grease to the roller shaft.	
4	Replacing the main charger roller unit	Proper current does not flow due to deformation or breakage of the high-voltage contacts of the charger roller unit.	Replace the charger roller unit and run U930.	
5	Checking the connection	The connector is not connected properly, or the wire is faulty.	Clean the terminals of the electric wire connector below and reinsert them. If there is no continuity, replace the wire. • Main high voltage PWB - Image drive PWB • Image drive PWB - Engine PWB	
6	Replacing the main high voltage PWB	The main high voltage PWB is faulty.	Replace the main high voltage PWB.	
7	Replacing the image drive PWB	The image drive PWB is faulty.	Replacing the image drive PWB	
8	Replacing the engine PWB	The engine PWB is faulty.	Replace the engine PWB.	

C6000: IH heating error1

The detection temperature of the fuser center thermistor does not reach 100 ° C within 60sec after the start of warm-up. Or, during warm-up, the specified temperature (ready display temperature) is not reached within 420sec after the detection temperature of the fuser center thermistor reaches 100 ° C.

Step	Check description	Assumed cause	Measures	Reference
1	Executing U169	The IH setting mismatches the power supply specification.	Set the destination same as the voltage of the IH PWB at U169.	
2	Removing foreign material	There are foreign objects between the fuser unit and the IH unit. Or, the foreign objects are adhered on the fuser belt.	If there are foreign objects between the fuser unit and the IH unit, or on the fuser belt, remove them. After that, reinstall the fuser unit.	
3	Reinstalling the fuser unit	The foreign objects adhere on the drawer connection terminal of the fuser unit. Or, the drawer connector is not inserted completely.	Clean the drawer connection terminal of the fuser unit. Check the pin of the drawer connector is not bent, and replace the fuser unit if it is bent. If the pin is normal, reinstall the fuser unit so that the drawer connector is securely connected.	
4	Firmware upgrade	The firmware is not the latest version.	Upgrade the engine firmware to the latest version	
5	Checking the connection	The connector is not connected properly, or the wire is faulty.	Clean the terminal of the following wire connectors and reconnect the connectors. If there is no continuity, replace the wire. • Drawer connector of the fuser unit - Image drive PWB • Image drive PWB - Engine PWB • IH unit - IH PWB • IH PWB - Engine PWB	
6	Replacing the fuser unit	The temperature cannot be detected properly due to the broken thermostat or the thermistor error.	Replace the fuser unit.	
7	Replacing the IH unit	The IH unit is faulty.	Replace the IH unit.	
8	Replacing the IH PWB	The IH PWB is faulty.	Replace the IH PWB.	
9	Replacing the image drive PWB	The image drive PWB is faulty.	Replacing the image drive PWB	
10	Replacing the engine PWB	The engine PWB is faulty.	Replace the engine PWB.	

C6020: Fuser center thermistor high temperature error

The fuser center thermistor detected 245 ° C or higher for 1sec.

Step	Check description	Assumed cause	Measures	Reference
1	Reinstalling the fuser unit	The foreign objects adhere on the drawer connection terminal of the fuser unit. Or, the drawer connector is not inserted completely.	Clean the drawer connection terminal of the fuser unit. Check the pin of the drawer connector is not bent, and replace the fuser unit if it is bent. If the pin is normal, reinstall the fuser unit so that the drawer connector is securely connected.	
2	Firmware upgrade	The firmware is not the latest version.	Upgrade the engine firmware to the latest version	
3	Checking the connection	The connector is not connected properly, or the wire is faulty.	Clean the terminal of the following wire connectors and reconnect the connectors. If there is no continuity, replace the wire. • Drawer connector of the fuser unit - Image drive PWB • Image drive PWB - Engine PWB	
4	Replacing the fuser unit	The temperature cannot be detected properly due to the thermistor error, etc.	Replace the fuser unit.	
5	Replacing the image drive PWB	The image drive PWB is faulty.	Replacing the image drive PWB	
6	Replacing the engine PWB	The engine PWB is faulty.	Replace the engine PWB.	

C6030: Broken fuser center thermistor

During the warm-up, the temperature of the fuser center thermistor was detected to be less than 41 ° C for 1sec while the fuser edge thermistor was detecting 100 ° C or higher.

Step	Check description	Assumed cause	Measures	Reference
1	Removing foreign material	There are foreign objects between the fuser unit and the IH unit. Or, the foreign objects are adhered on the fuser belt.	If there are foreign objects between the fuser unit and the IH unit, or on the fuser belt, remove them. After that, reinstall the fuser unit.	
2	Reinstalling the fuser unit	The foreign objects adhere on the drawer connection terminal of the fuser unit. Or, the drawer connector is not inserted completely.	Clean the drawer connection terminal of the fuser unit. Check the pin of the drawer connector is not bent, and replace the fuser unit if it is bent. If the pin is normal, reinstall the fuser unit so that the drawer connector is securely connected.	
3	Firmware upgrade	The firmware is not the latest version.	Upgrade the engine firmware to the latest version	
4	Checking the connection	The connector is not connected properly, or the wire is faulty.	Clean the terminal of the following wire connectors and reconnect the connectors. If there is no continuity, replace the wire. • Drawer connector of the fuser unit - Image drive PWB • Image drive PWB - Engine PWB	
5	Replacing the fuser unit	The temperature is not properly detected due to the broken wire or the thermistor error in the fuser unit.	Replace the fuser unit.	
6	Replacing the image drive PWB	The image drive PWB is faulty.	Replacing the image drive PWB	
7	Replacing the engine PWB	The engine PWB is faulty.	Replace the engine PWB.	

C6050: Fuser center thermistor low temperature error

During printing, the fuser center thermistor detected a condition below 80 ° C for 1sec.

Step	Check description	Assumed cause	Measures	Reference
1	Changing the wall outlet	The power voltage descends by 10% or more of the rated voltage when printing.	Connect the power cord to a different wall outlet if the power supply voltage descends by 10% or more of the rated voltage.	
2	Removing foreign material	There are foreign objects between the fuser unit and the IH unit. Or, the foreign objects are adhered on the fuser belt.	If there are foreign objects between the fuser unit and the IH unit, or on the fuser belt, remove them. After that, reinstall the fuser unit.	
3	Reinstalling the fuser unit	The foreign objects adhere on the drawer connection terminal of the fuser unit. Or, the drawer connector is not inserted completely.	Clean the drawer connection terminal of the fuser unit. Check the pin of the drawer connector is not bent, and replace the fuser unit if it is bent. If the pin is normal, reinstall the fuser unit so that the drawer connector is securely connected.	
4	Firmware upgrade	The firmware is not the latest version.	Upgrade the engine firmware to the latest version	
5	Checking the connection	The connector is not connected properly, or the wire is faulty.	Clean the terminal of the following wire connectors and reconnect the connectors. If there is no continuity, replace the wire. • Drawer connector of the fuser unit - Image drive PWB • Image drive PWB - Engine PWB • IH unit - IH PWB • IH PWB - Engine PWB	
6	Replacing the fuser unit	The temperature is not properly detected due to the broken wire or the thermistor error in the fuser unit.	Replace the fuser unit.	
7	Replacing the IH unit	The IH unit is faulty.	Replace the IH unit.	
8	Replacing the IH PWB	The IH PWB is faulty.	Replace the IH PWB.	
9	Replacing the image drive PWB	The image drive PWB is faulty.	Replacing the image drive PWB	
10	Replacing the engine PWB	The engine PWB is faulty.	Replace the engine PWB.	

C6120: Fuser thermistor (lower) high temperature error

The fuser press thermistor detected 210 ° C or higher for 1sec.

Step	Check description	Assumed cause	Measures	Reference
1	Reinstalling the fuser unit	The foreign objects adhere on the drawer connection terminal of the fuser unit. Or, the drawer connector is not inserted completely.	Clean the drawer connection terminal of the fuser unit. Check the pin of the drawer connector is not bent, and replace the fuser unit if it is bent. If the pin is normal, reinstall the fuser unit so that the drawer connector is securely connected.	
2	Firmware upgrade	The firmware is not the latest version.	Upgrade the engine firmware to the latest version	
3	Checking the connection	The connector is not connected properly, or the wire is faulty.	Clean the terminal of the following wire connectors and reconnect the connectors. If there is no continuity, replace the wire. • Drawer connector of the fuser unit - Image drive PWB • Image drive PWB - Engine PWB	
4	Replacing the fuser unit	The temperature cannot be detected properly due to the thermistor error, etc.	Replace the fuser unit.	
5	Replacing the image drive PWB	The image drive PWB is faulty.	Replacing the image drive PWB	
6	Replacing the engine PWB	The engine PWB is faulty.	Replace the engine PWB.	

C6130: Fuser thermistor (upper) broken detection

- During the warm-up, the fuser press thermistor detected less than 30 ° C for 60sec continuously.
- After the warm-up was completed, the fuser press thermistor detected less than 30 ° C continuously for 10sec.

Step	Check description	Assumed cause	Measures	Reference
1	Removing foreign material	There are foreign objects between the fuser unit and the IH unit. Or, the foreign objects are adhered on the fuser belt.	If there are foreign objects between the fuser unit and the IH unit, or on the fuser belt, remove them. After that, reinstall the fuser unit.	
2	Reinstalling the fuser unit	The foreign objects adhere on the drawer connection terminal of the fuser unit. Or, the drawer connector is not inserted completely.	Clean the drawer connection terminal of the fuser unit. Check the pin of the drawer connector is not bent, and replace the fuser unit if it is bent. If the pin is normal, reinstall the fuser unit so that the drawer connector is securely connected.	
3	Firmware upgrade	The firmware is not the latest version.	Upgrade the engine firmware to the latest version	
4	Checking the connection	The connector is not connected properly, or the wire is faulty.	Clean the terminal of the following wire connectors and reconnect the connectors. If there is no continuity, replace the wire. • Drawer connector of the fuser unit - Image drive PWB • Image drive PWB - Engine PWB	
5	Replacing the fuser unit	The temperature is not properly detected due to the broken wire or the thermistor error in the fuser unit.	Replace the fuser unit.	
6	Replacing the image drive PWB	The image drive PWB is faulty.	Replacing the image drive PWB	
7	Replacing the engine PWB	The engine PWB is faulty.	Replace the engine PWB.	

C6200: IH heating error 2

- The detection temperature of the fuser edge thermistor does not reach 80 ° C within 60sec from the start of warm-up.
- During warm-up, the detection temperature of the fuser edge thermistor does not reach the ready display temperature within 420sec after the fuser edge thermistor detects 80 ° C.

Step	Check description	Assumed cause	Measures	Reference
1	Removing foreign material	There are foreign objects between the fuser unit and the IH unit. Or, the foreign objects are adhered on the fuser belt.	If there are foreign objects between the fuser unit and the IH unit, or on the fuser belt, remove them. After that, reinstall the fuser unit.	
2	Reinstalling the fuser unit	The foreign objects adhere on the drawer connection terminal of the fuser unit. Or, the drawer connector is not inserted completely.	Clean the drawer connection terminal of the fuser unit. Check the pin of the drawer connector is not bent, and replace the fuser unit if it is bent. If the pin is normal, reinstall the fuser unit so that the drawer connector is securely connected.	
3	Firmware upgrade	The firmware is not the latest version.	Upgrade the engine firmware to the latest version	
4	Checking the connection	The connector is not connected properly, or the wire is faulty.	Clean the terminal of the following wire connectors and reconnect the connectors. If there is no continuity, replace the wire. • Drawer connector of the fuser unit - Image drive PWB • Image drive PWB - Engine PWB • IH unit - IH PWB • IH PWB - Engine PWB	
5	Replacing the fuser unit	Correct temperature can't be detected due to the wire breakage or the thermistor error in the fuser unit. Or, the fuser belt is faulty.	Replace the fuser unit.	
6	Replacing the IH unit	The IH unit is faulty.	Replace the IH unit.	
7	Replacing the IH PWB	The IH PWB is faulty.	Replace the IH PWB.	
8	Replacing the image drive PWB	The image drive PWB is faulty.	Replacing the image drive PWB	
9	Replacing the engine PWB	The engine PWB is faulty.	Replace the engine PWB.	

C6220: Fuser edge thermistor high temperature error

The fuser edge thermistor detected 249 ° C or higher for 1sec.

Step	Check description	Assumed cause	Measures	Reference
1	Reinstalling the fuser unit	The foreign objects adhere on the drawer connection terminal of the fuser unit. Or, the drawer connector is not inserted completely.	Clean the drawer connection terminal of the fuser unit. Check the pin of the drawer connector is not bent, and replace the fuser unit if it is bent. If the pin is normal, reinstall the fuser unit so that the drawer connector is securely connected.	
2	Firmware upgrade	The firmware is not the latest version.	Upgrade the engine firmware to the latest version	
3	Checking the connection	The connector is not connected properly, or the wire is faulty.	Clean the terminal of the following wire connectors and reconnect the connectors. If there is no continuity, replace the wire.. • Drawer connector of the fuser unit - Image drive PWB • Image drive PWB - Engine PWB • IH unit - IH PWB • IH PWB - Engine PWB	
4	Replacing the fuser unit	Correct temperature can't be detected due to the wire breakage or the thermistor error in the fuser unit. Or, the fuser belt is faulty.	Replace the fuser unit.	
5	Replacing the IH unit	The IH unit is faulty.	Replace the IH unit.	
6	Replacing the IH PWB	The IH PWB is faulty.	Replace the IH PWB.	
7	Replacing the image drive PWB	The image drive PWB is faulty.	Replacing the image drive PWB	
8	Replacing the engine PWB	The engine PWB is faulty.	Replace the engine PWB.	

C6230: Broken fuser edge thermistor

While the fuser center thermistor detected 100 ° C or higher during warm-up, the fuser edge thermistor detected less than 41 ° C for 1sec continuously.

Step	Check description	Assumed cause	Measures	Reference
1	Removing foreign material	There are foreign objects between the fuser unit and the IH unit. Or, the foreign objects are adhered on the fuser belt.	If there are foreign objects between the fuser unit and the IH unit, or on the fuser belt, remove them. After that, reinstall the fuser unit.	
2	Reinstalling the fuser unit	The foreign objects adhere on the drawer connection terminal of the fuser unit. Or, the drawer connector is not inserted completely.	Clean the drawer connection terminal of the fuser unit. Check the pin of the drawer connector is not bent, and replace the fuser unit if it is bent. If the pin is normal, reinstall the fuser unit so that the drawer connector is securely connected.	
3	Firmware upgrade	The firmware is not the latest version.	Upgrade the engine firmware to the latest version	
4	Checking the connection	The connector is not connected properly, or the wire is faulty.	Clean the terminal of the following wire connectors and reconnect the connectors. If there is no continuity, replace the wire. • Drawer connector of the fuser unit - Image drive PWB • Image drive PWB - Engine PWB	
5	Replacing the fuser unit	The temperature cannot be detected properly due to the heater broken or the thermistor error.	Replace the fuser unit.	
6	Replacing the image drive PWB	The image drive PWB is faulty.	Replacing the image drive PWB	
7	Replacing the engine PWB	The engine PWB is faulty.	Replace the engine PWB.	

C6250: Fuser edge thermistor low temperature error

The fuser edge thermistor detected less than 80°C / 176°F for 1s during printing.

Step	Check description	Assumed cause	Measures	Reference
1	Removing foreign material	There are foreign objects between the fuser unit and the IH unit. Or, the foreign objects are adhered on the fuser belt.	If there are foreign objects between the fuser unit and the IH unit, or on the fuser belt, remove them. After that, reinstall the fuser unit.	
2	Reinstalling the fuser unit	The foreign objects adhere on the drawer connection terminal of the fuser unit. Or, the drawer connector is not inserted completely.	Clean the drawer connection terminal of the fuser unit. Check the pin of the drawer connector is not bent, and replace the fuser unit if it is bent. If the pin is normal, reinstall the fuser unit so that the drawer connector is securely connected.	
3	Firmware upgrade	The firmware is not the latest version.	Upgrade the engine firmware to the latest version	
4	Checking the connection	The connector is not connected properly, or the wire is faulty.	Clean the terminal of the following wire connectors and reconnect the connectors. If there is no continuity, replace the wire. • Drawer connector of the fuser unit - Image drive PWB • Image drive PWB - Engine PWB • IH unit - IH PWB • IH PWB - Engine PWB	
5	Replacing the fuser unit	The temperature cannot be detected properly due to the heater broken or the thermistor error.	Replace the fuser unit.	
6	Replacing the IH unit	The IH unit is faulty.	Replace the IH unit.	
7	Replacing the IH PWB	The IH PWB is faulty.	Replace the IH PWB.	
8	Replacing the image drive PWB	The image drive PWB is faulty.	Replacing the image drive PWB	
9	Replacing the engine PWB	The engine PWB is faulty.	Replace the engine PWB.	

C6320: Fuser middle thermistor high temperature error

The fuser middle thermistor detected 249 ° C or higher for 1sec.

Step	Check description	Assumed cause	Measures	Reference
1	Reinstalling the fuser unit	The foreign objects adhere on the drawer connection terminal of the fuser unit. Or, the drawer connector is not inserted completely.	Clean the drawer connection terminal of the fuser unit. Check the pin of the drawer connector is not bent, and replace the fuser unit if it is bent. If the pin is normal, reinstall the fuser unit so that the drawer connector is securely connected.	
2	Firmware upgrade	The firmware is not the latest version.	Upgrade the engine firmware to the latest version	
3	Checking the connection	The connector is not connected properly, or the wire is faulty.	Clean the terminal of the following wire connectors and reconnect the connectors. If there is no continuity, replace the wire. • Drawer connector of the fuser unit - Image drive PWB • Image drive PWB - Engine PWB • IH unit - IH PWB • IH PWB - Engine PWB	
4	Replacing the fuser unit	The temperature is not properly detected due to the wire short-circuit or the thermistor error in the fuser unit.	Replace the fuser unit.	
5	Replacing the IH unit	The IH unit is faulty.	Replace the IH unit.	
6	Replacing the IH PWB	The IH PWB is faulty.	Replace the IH PWB.	
7	Replacing the image drive PWB	The image drive PWB is faulty.	Replacing the image drive PWB	
8	Replacing the engine PWB	The engine PWB is faulty.	Replace the engine PWB.	

C6330: Broken fuser middle thermistor

The fuser middle thermistor detects less than 41 °C / 105°F for 1s continuously while the fuser center thermistor or the fuser edge thermistor detects 100°C / 212°F or more during warm-up.

Step	Check description	Assumed cause	Measures	Reference
1	Reinstalling the fuser unit	The foreign objects adhere on the drawer connection terminal of the fuser unit. Or, the drawer connector is not inserted completely.	Clean the drawer connection terminal of the fuser unit. Check the pin of the drawer connector is not bent, and replace the fuser unit if it is bent. If the pin is normal, reinstall the fuser unit so that the drawer connector is securely connected.	
2	Firmware upgrade	The firmware is not the latest version.	Upgrade the engine firmware to the latest version	
3	Checking the connection	The connector is not connected properly, or the wire is faulty.	Clean the terminal of the following wire connectors and reconnect the connectors. If there is no continuity, replace the wire. • Drawer connector of the fuser unit - Image drive PWB • Image drive PWB - Engine PWB • IH unit - IH PWB • IH PWB - Engine PWB	
4	Replacing the fuser unit	The temperature cannot be detected properly due to the heater broken or the thermistor error.	Replace the fuser unit.	
5	Replacing the IH unit	The IH unit is faulty.	Replace the IH unit.	
6	Replacing the IH PWB	The IH PWB is faulty.	Replace the IH PWB.	
7	Replacing the image drive PWB	The image drive PWB is faulty.	Replacing the image drive PWB	
8	Replacing the engine PWB	The engine PWB is faulty.	Replace the engine PWB.	

C6410: Fuser unit type mismatch error

Unit identification codes do not match.

Step	Check description	Assumed cause	Measures	Reference
1	Replacing the fuser unit	The fuser unit for other models is installed.	Install the fuser unit for the applicable models.	
2	Reinstalling the fuser unit	The foreign objects adhere on the drawer connection terminal of the fuser unit. Or, the drawer connector is not inserted completely.	Clean the drawer connection terminal of the fuser unit. Check the pin of the drawer connector is not bent, and replace the fuser unit if it is bent. If the pin is normal, reinstall the fuser unit so that the drawer connector is securely connected.	
3	Firmware upgrade	The firmware is faulty.	Reinstall the engine firmware.	
4	Checking the connection	The connector is not connected properly, or the wire is faulty.	Clean the terminal of the following wire connectors and reconnect the connectors. If there is no continuity, replace the wire. • Drawer connector of the fuser unit - Image drive PWB • Image drive PWB - Engine PWB	
5	Replacing the fuser unit	The fuser unit is faulty.	Replace the fuser unit.	
6	Replacing the image drive PWB	The image drive PWB is faulty.	Replacing the image drive PWB	
7	Replacing the engine PWB	The engine PWB is faulty.	Replace the engine PWB.	

C6600: Fuser belt rotation error

The belt rotation pulse is not input for 1.8s continuously.

Step	Check description	Assumed cause	Measures	Reference
1	Reinstalling the fuser unit	The foreign objects adhere on the drawer connection terminal of the fuser unit. Or, the drawer connector is not inserted completely.	Clean the drawer connection terminal of the fuser unit. Check the pin of the drawer connector is not bent, and replace the fuser unit if it is bent. If the pin is normal, reinstall the fuser unit so that the drawer connector is securely connected.	
2	Firmware upgrade	The firmware is not the latest version.	Upgrade the engine firmware to the latest version	
3	Replacing the fuser unit	The fuser unit parts such as the fuser belt, the belt rotation detecting system, or the belt rotation sensor are faulty	Replace the fuser unit.	
4	Checking the fuser drive unit	The load is increasing due to the lack of grease in the bearings and gears in the fuser drive unit. Or, the component parts in the fuser drive unit are faulty.	Execute U030 [Fuser] and check the operation of the fuser motor and the drive gear in the fuser drive unit. If there is a load on the rotation, apply grease (EM-50LP .. Part number: 7BG010009H) to the bearings and gears inside the fuser drive unit. If it does not repair, replace the fuser drive unit.	
5	Checking the connection	The connector is not connected properly, or the wire is faulty.	Clean the following connector terminal of the wire and reinsert them. If there is no continuity, replace the wire. • fuser motor - Feed drive PWB • Feed drive PWB - Engine PWB • Drawer connector of fuser unit - Image drive PWB • Image drive PWB - Engine PWB	
6	Replacing the fuser motor	The fuser motor is faulty.	Replace the fuser motor.	
7	Replacing the feed drive PWB	The feed drive PWB is faulty.	Replace the feed drive PWB.	
8	Replacing the image drive PWB	The image drive PWB is faulty.	Replacing the image drive PWB	
9	Replacing the engine PWB	The engine PWB is faulty.	Replace the engine PWB.	

C6610: Fuser pressure release sensor error

- The fuser pressure release sensor does not turn off even after 3sec have passed from the fuser pressure release instruction of the fuser pressure release motor or the JAM processing position movement instruction.
- The fuser pressure release sensor does not turn on even after 10sec have passed from the fuser pressure release instruction of the fuser pressure release motor.
- The lock signal of the fuser pressure release motor became Low for 0.2sec.

Step	Check description	Assumed cause	Measures	Reference
1	Reinstalling the fuser unit	The foreign objects adhere on the drawer connection terminal of the fuser unit. Or, the drawer connector is not inserted completely.	Clean the drawer connection terminal of the fuser unit. Check the pin of the drawer connector is not bent, and replace the fuser unit if it is bent. If the pin is normal, reinstall the fuser unit so that the drawer connector is securely connected.	
2	Firmware upgrade	The firmware is not the latest version.	Upgrade the engine firmware to the latest version	
3	Replacing the fuser unit	The fuser unit is faulty at the fuser pressure release mechanism or the fuser pressure release sensor .	Replace the fuser unit.	
4	Checking the connection	The connector is not connected properly, or the wire is faulty.	Reconnect the following wire connector. If there is no continuity, replace the wire. • Fuser pressure release motor - Feed drive PWB • Feed drive PWB - Engine PWB • Drawer connector of fuser unit - Image drive PWB • Image drive PWB - Engine PWB	
5	Replacing the fuser pressure release motor	The fuser pressure release motor is faulty.	Execute U030 [Fuser Release]. If the fuser pressure release motor does not operate properly, replace the fuser pressure release motor.	
6	Checking the fuser drive unit	The drive transmission of the fuser pressure release motor is faulty.	Execute U030 [Fuser Release] and check the rotation of the drive gear in the fixed drive unit. If there is a load on the rotation, apply grease (EM-50LP .. Part number: 7BG010009H) to the bearings and gears inside the fuser drive unit. If it does not repair, replace the fuser drive unit.	
7	Replacing the feed drive PWB	The feed drive PWB is faulty.	Replace the feed drive PWB.	
8	Replacing the image drive PWB	The image drive PWB is faulty.	Replacing the image drive PWB	
9	Replacing the engine PWB	The engine PWB is faulty.	Replace the engine PWB.	

C6620: IH core motor rotation error

- When detecting the home position, the IH position sensor does not turn on within 5s after the IH core motor is driven under the condition of the IH position sensor off.
- When detecting the home position, the IH position sensor does not turn off and on within 5s after the IH core motor is driven under the condition of the IH position sensor on.
- When relocating the home position for the small size paper, the IH position sensor does not turn off within the predetermined pulse after the IH core motor is driven under the condition of the IH position sensor on.

Step	Check description	Assumed cause	Measures	Reference
1	Firmware upgrade	The firmware is not the latest version.	Upgrade the engine firmware to the latest version	
2	Checking the IH unit	The IH unit connector is not connected properly.	Check if the connector pins of the IH unit do not bend. If the pins bend, fix them. Next, reinstall the IH unit so that the connector firmly connects.	
3	Checking the IH positioning sensor	The IH position sensor is dirty. Or it is not installed properly.	Clean the IH position sensor and reinstall it.	
4	Checking the connection	The connector is not connected properly, or the wire is faulty.	Clean the following connector terminal of the wire and reinsert them. If there is no continuity, replace the wire. • IH core motor or IH position sensor (IH unit) - Front drive PWB • Front drive PWB - Image drive PWB • Image drive PWB - Engine PWB	
5	Replacing the IH unit	The IH positioning sensor or the IH core motor is faulty.	Replace the IH unit.	
6	Replacing the front drive PWB	The front drive PWB is faulty.	Replacing the front drive PWB	
7	Replacing the image drive PWB	The image drive PWB is faulty.	Replacing the image drive PWB	
8	Replacing the engine PWB	The engine PWB is faulty.	Replace the engine PWB.	

C6740: IH PWB high temperature error (IGBT2)

The IGBT temperature acquired from the power microcomputer was detected to be 45 ° C or less for 1sec continuously.

Step	Check description	Assumed cause	Measures	Reference
1	Firmware upgrade	The firmware is not the latest version.	Upgrade the engine firmware to the latest version	
2	Checking the connection	The connector is not connected properly, or the wire is faulty.	Clean the terminal of the following wire connectors and reconnect the connectors. If there is no continuity, replace the wire. • IH PWB - Engine PWB	
3	Replacing the IH PWB	The IH PWB is faulty.	Replace the IH PWB.	
4	Replacing the engine PWB	The engine PWB is faulty.	Replace the engine PWB.	

C6760: IH fuser input excessive electric current error

The input current acquired from the power microcomputer was 20A (100 to 120V) or 10A (200V or more) or more for 0.2sec.

Step	Check description	Assumed cause	Measures	Reference
1	Firmware upgrade	The firmware is not the latest version.	Upgrade the engine firmware to the latest version	
2	Checking the fuser unit	The fuser belt is faulty.	Detach the fuser unit and check if the fuser belt is not faulty. If there is any damage, replace the fuser unit.	
3	Checking the connection	The connector is not connected properly, or the wire is faulty.	Clean the terminal of the following wire connectors and reconnect the connectors. If there is no continuity, replace the wire. • IH PWB - Engine PWB	
4	Replacing the IH PWB	The IH PWB is faulty.	Replace the IH PWB.	
5	Replacing the engine PWB	The engine PWB is faulty.	Replace the engine PWB.	

C6770: IH low power error

After the start of fuser heating, the condition of the set power value x0.3 or less was continued 4 times, and the same condition was obtained even if the retry was executed 3 times.

Step	Check description	Assumed cause	Measures	Reference
1	Firmware upgrade	The firmware is not the latest version.	Upgrade the engine firmware to the latest version	
2	Checking the fuser unit drawer connectors	The fuser unit drawer connectors are not properly connected.	If there is foreign objects on the drawer pins of each connection drawer, clean it. If it is deformed, correct it or replace it. If the drawer pin is normal, reattach the anchoring unit to ensure that the drawer connector is connected. If there is something wrong with the drawer pin on the fuser unit side and it cannot be repaired by cleaning or repairing: Replace the fuser unit. If there is something wrong with the drawer pin inside the machine and it cannot be repaired by cleaning or repairing: Replace the corresponding wire. (Part number: 302XC4617_)	
3	Checking the connection	The connector is not connected properly, or the wire is faulty.	Clean the following connector terminal of the wire and reinsert them. If there is no continuity, replace the wire. • IH unit - IH PWB • IH PWB - Engine PWB • Drawer connector of fuser unit - Image drive PWB • Image drive PWB - Engine PWB	
4	Replacing the fuser unit	The fuser unit does not operate properly.	Replace the fuser unit.	
5	Changing the wall outlet	The power supply voltage is not proper.	Plug the power cord into another wall outlet.	
6	Replacing the IH PWB	The IH PWB is faulty.	Replace the IH PWB.	
7	Replacing the IH unit	The IH unit is faulty (The coil is broken).	Replace the IH unit.	
8	Replacing the image drive PWB	The image drive PWB is faulty.	Replacing the image drive PWB	
9	Replacing the engine PWB	The engine PWB is faulty.	Replace the engine PWB.	

C6900: Fuser edge section cooling fan error

The lock-up was detected for 20s continuously when driving the fan motor.

Step	Check description	Assumed cause	Measures	Reference
1	Firmware upgrade	The firmware is not the latest version.	Upgrade the engine firmware to the latest version	
2	Checking the fuser edge fan motor	The connector is not connected properly. The wire is faulty. The fan does not operate as paper size on the MP tray is misdetected.	Execute U037 [Fuser Edge] and check the operation of the fan motor at the fixed end. Also, make sure that the paper size in the bypass tray is detected accurately. If the fuser edge fan motor is not operating properly or the paper size of the bypass tray is erroneously detected, reconnect the connector of the transport unit (fuser edge fan motor) to the relay connector on the machine body side. please.	
3	Correcting the connector pins for connecting the right cover (conveying unit)	The connector pin deforms at the machine right side (inside the right cover).	Correct the deformed connector pin for connecting the right cover (conveying unit) at the machine right side of the main unit (inside the right cover).	
4	Checking the connection	The connector is not connected properly, or the wire is faulty.	Clean the following connector terminal of the wire and reinsert them. If there is no continuity, replace the wire. • Fuser edge fan motor - Feed drive PWB • Feed drive PWB - Engine PWB	
5	Replacing the fan motor at the fixed end	The fuser edge fan motor is faulty.	Replace the fan motor at the anchoring end.	
6	Replacing the feed drive PWB	The feed drive PWB is faulty.	Replace the feed drive PWB.	
7	Replacing the engine PWB	The engine PWB is faulty.	Replace the engine PWB.	

C6910: Engine firmware unexpected error

- Engine stability control continued for 1 hour.
- The backup task timeout process did not go around for 30sec.
- When driving the drum motor or the developer K/transfer belt motor, the paper feed motor does not drive even after 3sec or more.
- Only the high-voltage remote signal was turned on while the drum was stopped.
- The charging bias was turned off while the developer bias was on.

Step	Check description	Assumed cause	Measures	Reference
1	Resetting the power	The power startup delays.	Turn off the power switch and pull out the power plug. After passing 5s, reinsert the power plug and turn on the power switch.	
2	Firmware upgrade	The firmware is not the latest version.	Upgrade the engine firmware to the latest version	
3	Checking the engine PWB	The engine PWB is not properly attached or connected.	Retighten the screws securing the engine PWB so that it can ground securely, and reinsert the connectors all the way.	
4	Replacing the engine PWB	The engine PWB is faulty.	Replace the engine PWB.	

C6920: Eject paper/IH front fan motor error

The lock-up was detected for 20s continuously when driving the fan motor.

Step	Check description	Assumed cause	Measures	Reference
1	Firmware upgrade	The firmware is not the latest version.	Upgrade the engine firmware to the latest version	
2	Checking the connection	The connector is not connected properly, or the wire is faulty.	Clean the following connector terminal of the wire and reinsert them. If there is no continuity, replace the wire. • Eject / IH front fan motor - Front drive PWB • Front drive PWB - Image drive PWB • Image drive PWB - Engine PWB	
3	Checking the exit/IH front fan motor	The exit/IH front fan motors do not properly operate.	Execute U037 [Exit Paper IH1]. If the exhaust / IH front fan motor does not work properly, clean it and reinstall it. If it is not repaired, replace it.	
4	Replacing the front drive PWB	The front drive PWB is faulty.	Replacing the front drive PWB	
5	Replacing the image drive PWB	The image drive PWB is faulty.	Replacing the image drive PWB	
6	Replacing the engine PWB	The engine PWB is faulty.	Replace the engine PWB.	

C6930: Output paper/IH middle fan motor error

When the fan motor was driven, continuous lock was detected for 20sec.

Step	Check description	Assumed cause	Measures	Reference
1	Firmware upgrade	The firmware is not the latest version.	Upgrade the engine firmware to the latest version	
2	Checking the connection	The connector is not connected properly, or the wire is faulty.	Clean the following connector terminal of the wire and reinsert them. If there is no continuity, replace the wire. Eject / IH medium fan motor - Front drive PWB Front drive PWB - Image drive PWB Image drive PWB - Engine PWB	
3	Checking the exit/IH middle fan motor	The exit/IH middle fan motors do not properly operate.	Execute U037 [Exit Paper IH2]. If the eject/IH middle fan motor does not operate properly, clean it and reinstall it. If it is not repaired, replace it.	
4	Replacing the front drive PWB	The front drive PWB is faulty.	Replacing the front drive PWB	
5	Replacing the image drive PWB	The image drive PWB is faulty.	Replacing the image drive PWB	
6	Replacing the engine PWB	The engine PWB is faulty.	Replace the engine PWB.	

C6950: IH PWB communication error

- Communication between the IH PWB and the engine PWB is not established in the initial communication.
- After the initial communication is established, the communication between the IH PWB and the engine PWB is not established except during printing.
- After the initial communication is established, the communication between the IH PWB and the engine PWB is not established at the time of printing.
- (For a 2-outlet machine, a message confirming the outlet is displayed on the operation panel up to 2 times in a row, and this service call is turned on after the 3rd time.)

Step	Check description	Assumed cause	Measures	Reference
1	Resetting the power	The power startup delays.	Turn off the power switch and pull out the power plug. After passing 5s, reinsert the power plug and turn on the power switch.	
2	Firmware upgrade	The firmware is not the latest version.	Upgrade the engine firmware to the latest version	
3	Checking the connection	The connector is not connected properly. Or, the wire is faulty. (Power supply failure to the IH PWB or communication error by the grounding failure.)	Clean the terminal of the following wire connectors and reconnect the connectors. If there is no continuity, replace the wire. • Power supply PWB - IH PWB • IH PWB - Engine PWB	
4	Checking the power supply voltage	The abnormal electric noise is mixed in the power supply voltage.	Plug the power cord into another wall outlet.	
5	Checking the Power supply PWB	The fuse on the Power supply PWB is broken.	Check the continuity of the fuse (F002) on the Power supply PWB. Then, replace the Power supply PWB if there is no continuity.	
6	Replacing the IH PWB	The IH PWB is faulty.	Replace the IH PWB.	
7	Replacing the engine PWB	The engine PWB is faulty.	Replace the engine PWB.	

C6980: Fuser unit EEPROM error

- The fuser unit EEPROM cannot be accessed because it matches any of the following.
- It was detected 5 times in a row that there was no response from the device for 5ms or more during scanning/writing.
- The data scanning in 2 places does not match 8 times in a row.
- The write data and the scanning data do not match 8 times in a row.

Step	Check description	Assumed cause	Measures	Reference
1	Checking the fuser unit drawer connectors	The fuser unit drawer connectors are not properly connected.	If there is foreign objects on the drawer pins of each connection drawer, clean it. If it is deformed, correct it or replace it. If the drawer pin is normal, reattach the anchoring unit to ensure that the drawer connector is connected. If there is something wrong with the drawer pin on the fuser unit side and it cannot be repaired by cleaning or repairing: Replace the fuser unit. If there is something wrong with the drawer pin inside the machine and it cannot be repaired by cleaning or repairing: Replace the corresponding wire. (Part number: 302XC4617_)	
2	Checking the connection	The connector is not connected properly, or the wire is faulty.	Clean the terminal of the following wire connectors and reconnect the connectors. If there is no continuity, replace the wire. • Image drive PWB - Engine PWB	
3	Replacing the fuser unit	The fuser unit is faulty.	Replace the fuser unit.	
4	Replacing the image drive PWB	The image drive PWB is faulty.	Replacing the image drive PWB	
5	Replacing the engine PWB	The engine PWB is faulty.	Replace the engine PWB.	

C6990: Fuser power source destination error

The information mismatches between the engine backup and the IH PWB.

Step	Check description	Assumed cause	Measures	Reference
1	Executing U169	The voltage setting at U169 mismatches the voltage of the IH PWB.	Set the destination same as the voltage of the IH PWB at U169.	
2	Firmware upgrade	The firmware is not the latest version.	Upgrade the engine firmware to the latest version	
3	Replacing the engine PWB	The engine PWB is faulty.	Replace the engine PWB.	

C7001: Container motor error

- The ready signal does not turn on even after 2sec have passed since the container motor was started.
- After the container motor stabilizes, the ready signal is off for 2sec in a row.

Step	Check description	Assumed cause	Measures	Reference
1	Replacing the toner container	The toner container locks up and is not rotated.	Replace the toner container.	
2	Firmware upgrade	The firmware is not the latest version.	Upgrade the engine firmware to the latest version	
3	Checking the toner container drive parts	The toner container drive parts are not operated properly, or the excessive load is applied to it.	Execute U030 [Container Mix] and check the operation of the container motor. If it does not operate properly, clean the toner container drive gear and coupling, and apply grease (EM-50LP .. Part number: 7BG010009H).	
4	Checking the connection	The connector is not connected properly, or the wire is faulty.	Clean the following connector terminal of the wire and reinsert them. If there is no continuity, replace the wire. • Container Motor - Image Drive PWB • Image Drive PWB - Engine PWB	
5	Checking the toner container motor	The toner container motor is faulty.	Reattach the container motor and reconnect the connector. If not repaired, replace it.	
6	Replacing the image drive PWB	The image drive PWB is faulty.	Replacing the image drive PWB	
7	Checking the engine PWB	The engine PWB is faulty.	Replace the engine PWB.	

C7101: T/C sensor K error

- The condition in which the T/C count value for one round of the stirring cycle was not within +20000 or -20000 with respect to the value stored in the EEPROM was detected 20 times in a row.
- The T/C count value does not change for 4sec or longer.

Step	Check description	Assumed cause	Measures	Reference
1	Reinstalling the developer unit	The developer unit is not properly installed.	Reinstall developer unit K so that the connector firmly connects.	
2	Firmware upgrade	The firmware is not the latest version.	Upgrade the engine firmware to the latest version	
3	Checking the connection	The connector is not connected properly, or the wire is faulty.	Clean the following connector terminal of the wire and reinsert them. If there is no continuity, replace the wire. • Drum/developer Relay PWB - Front Drive PWB • Front Drive PWB - Image Drive PWB • Image Drive PWB - Engine PWB	
4	Replacing the developer unit	The developing unit (T / C sensor) is faulty. Or, the drive gear is damaged and the developing screw does not rotate.	Replace developer unit K.	
5	Replacing the drum/developer relay PWB	The drum/developer relay PWB is faulty.	Replace the drum/developer relay PWB.	
6	Replacing the front drive PWB	The front drive PWB is faulty.	Replacing the front drive PWB	
7	Replacing the image drive PWB	The image drive PWB is faulty.	Replacing the image drive PWB	
8	Replacing the engine PWB	The engine PWB is faulty.	Replace the engine PWB.	

C7301: Toner motor K error

When the toner motor is driven, the pulse plate of the toner replenishment screw cannot detect the pulse for 2sec, so the toner motor drive is stopped and the toner motor waits for 0.1sec. Even if the operation is repeated three times in a row, the pulse cannot be detected.

Step	Check description	Assumed cause	Measures	Reference
1	Firmware upgrade	The firmware is not the latest version.	Upgrade the engine firmware to the latest version	
2	Checking the toner supply drive unit	The toner supply screw is not rotated properly due to the excessive load. (The pulse plate is not rotated.)	Check if the toner is not clogged inside the toner supply drive unit by rotating the toner supply screw manually. Then, clean the unit if necessary.	
3	Checking the connection	The connector is not connected properly, or the wire is faulty.	Clean the following connector terminal of the wire and reinsert them. If there is no continuity, replace the wire. • Toner replenishment drive unit (toner motor K, toner motor rotation sensor K) - Image drive PWB • Image drive PWB - Engine PWB	
4	Replacing the toner supply drive unit	The toner replenishment drive unit (toner motor K, toner motor rotation sensor K) is faulty.	Replace the toner supply drive unit.	
5	Replacing the image drive PWB	The image drive PWB is faulty.	Replacing the image drive PWB	
6	Checking the engine PWB	The engine PWB is faulty.	Replace the engine PWB.	

C7320: Toner container connect detection error

With the toner container cover closed, disconnection of the toner container connection detection connector was detected.

Step	Check description	Assumed cause	Measures	Reference
1	Firmware upgrade	The firmware is not the latest version.	Upgrade the engine firmware to the latest version	
2	Checking the connection	The connector is not connected properly, or the wire is faulty.	Clean the following connector terminal of the wire and reinsert them. If there is no continuity, replace the wire. • Container identification contact - Image drive PWB • Image drive PWB - Engine PWB	
3	Replacing the image drive PWB	The image drive PWB is faulty.	Replacing the image drive PWB	
4	Checking the engine PWB	The engine PWB is faulty.	Replace the engine PWB.	

C7401: Developer unit K type mismatch error

Unit identification codes do not match.

Step	Check description	Assumed cause	Measures	Reference
1	Firmware upgrade	The firmware is faulty.	Please upgrade the engine firmware and motor CPU firmware to the latest version.	
2	Replacing the developer unit	A developing unit for other models is installed.	Install developer unit K for the applicable models.	
3	Reinstalling the developer unit	Foreign objects are attached to the connector connection terminal of the developing unit. Or, the connector is not completely inserted.	Clean the connector connection terminal of the developing unit K. Check that the pins on the connector are not bent, and if they are, replace the developing unit. If the pins are normal, reattach the developing unit K to ensure that the connector is connected.	
4	Checking the connection	The connector is not connected properly, or the wire is faulty.	Clean the following connector terminal of the wire and reinsert them. If there is no continuity, replace the wire. • Drum / developer Relay PWB - Front Drive PWB • Front Drive PWB - Image Drive PWB • Image Drive PWB - Engine PWB	
5	Replacing the developer unit	The developer unit is faulty.	Replace developer unit K.	
6	Replacing the drum/developer relay PWB	The drum/developer relay PWB is faulty.	Replace the drum/developer relay PWB.	
7	Replacing the front drive PWB	The front drive PWB is faulty.	Replacing the front drive PWB	
8	Replacing the image drive PWB	The image drive PWB is faulty.	Replacing the image drive PWB	
9	Replacing the engine PWB	The engine PWB is faulty.	Replace the engine PWB.	

C7420: Primary transfer unit type mismatch error

Unit identification codes do not match.

Step	Check description	Assumed cause	Measures	Reference
1	Replacing the primary transfer unit	The primary transfer unit for other models is installed.	Install the primary transfer unit for the applicable models.	
2	Reinstalling the primary transfer unit	The connector of the primary transfer unit is not firmly connected.	Reinstall the primary transfer unit so that the connector firmly connects.	
3	Firmware upgrade	The firmware is faulty.	Reinstall the engine firmware.	
4	Checking the connection	The connector is not connected properly, or the wire is faulty.	Clean the following connector terminal of the wire and reinsert them. If there is no continuity, replace the wire. • Primary transfer unit (transfer PWB) - Transfer connection PWB • Transfer connection PWB - Image drive PWB • Image drive PWB - Engine PWB	
5	Replacing the primary transfer unit	The transfer PWB is faulty.	Replace the primary transfer unit.	
6	Replacing the transfer connection PWB	The transfer connection PWB is faulty.	Replace the transfer connection PWB.	
7	Replacing the image drive PWB	The image drive PWB is faulty.	Replacing the image drive PWB	
8	Replacing the engine PWB	The engine PWB is faulty.	Replace the engine PWB.	

C7470: Eject/fuser PI cooling fan motor error

The lock-up was detected for 20s continuously when driving the fan motor.

Step	Check description	Assumed cause	Measures	Reference
1	Firmware upgrade	The firmware is not the latest version.	Please upgrade the engine firmware and motor CPU firmware to the latest version.	
2	Checking the connection	The connector is not connected properly, or the wire is faulty.	Clean the following connector terminal of the wire and reinsert them. If there is no continuity, replace the wire. • Eject / fuser PI Cooling fan motor - Front drive PWB • Front drive PWB - Image drive PWB • Image drive PWB - Engine PWB	
3	Checking the eject / fuser PI cooling fan motor	Eject/fuser PI cooling fan motor is not working properly.	Execute U037 [Exit Fuser PI]. If the eject/ fuser PI cooling fan motor does not work properly, clean it, check if the fan rotates manually, and then reinstall it. If it is not repaired, replace it.	
4	Replacing the front drive PWB	The front drive PWB is faulty.	Replacing the front drive PWB	
5	Replacing the image drive PWB	The image drive PWB is faulty.	Replacing the image drive PWB	
6	Replacing the engine PWB	The engine PWB is faulty.	Replace the engine PWB.	

C7480: Power source fan motor error

The lock-up was detected for 20s continuously when driving the fan motor.

Step	Check description	Assumed cause	Measures	Reference
1	Firmware upgrade	The firmware is not the latest version.	Please upgrade the engine firmware and motor CPU firmware to the latest version.	
2	Checking the connection	The connector is not connected properly, or the wire is faulty.	Clean the terminal of the following wire connectors and reconnect the connectors. If there is no continuity, replace the wire. • Power source fan motor - Engine PWB	
3	Checking the power source fan motor	The fan motor does not rotate properly due to dirt. Or it is faulty.	Execute U037 [LVU CL Fan]. If the power source fan motor does not work properly, clean it, check if the fan rotates manually, and then reinstall it. If it is not repaired, replace it.	
4	Replacing the engine PWB	The engine PWB is faulty.	Replace the engine PWB.	

C7490: Exit fan motor error

The lock-up was detected for 20s continuously when driving the fan motor.

Step	Check description	Assumed cause	Measures	Reference
1	Firmware upgrade	The firmware is not the latest version.	Please upgrade the engine firmware and motor CPU firmware to the latest version.	
2	Checking the connection	The connector is not connected properly, or the wire is faulty.	Clean the following connector terminal of the wire and reinsert them. If there is no continuity, replace the wire. • Eject fan motor - Feed drive PWB • Feed drive PWB - Engine PWB	
3	Checking the exit fan motor	The fan motor does not rotate properly due to dirt. Or it is faulty.	Execute U037 [Exit Cooling]. If the eject fan motor does not work properly, clean it, check if the fan rotates manually, and then reinstall it. If it is not repaired, replace it.	
4	Replacing the feed drive PWB	The feed drive PWB is faulty.	Replace the feed drive PWB.	
5	Replacing the engine PWB	The engine PWB is faulty.	Replace the engine PWB.	

C7850: Container left fan motor error

The lock-up was detected for 20s continuously when driving the fan motor.

Step	Check description	Assumed cause	Measures	Reference
1	Firmware upgrade	The firmware is not the latest version.	Please upgrade the engine firmware and motor CPU firmware to the latest version.	
2	Checking the connection	The connector is not connected properly, or the wire is faulty.	Clean the following connector terminal of the wire and reinsert them. If there is no continuity, replace the wire. • Container left fan motor - Front drive PWB • Front drive PWB - Image drive PWB • Image drive PWB - Engine PWB	
3	Checking the container left fan motor	The fan motor does not rotate properly due to dirt. Or it is faulty.	Execute U037 [Container Cooling]. If the container left fan motor does not work properly, clean it, check if the fan rotates manually, and then reinstall it. If it is not repaired, replace it.	
4	Replacing the front drive PWB	The front drive PWB is faulty.	Replacing the front drive PWB	
5	Replacing the image drive PWB	The image drive PWB is faulty.	Replacing the image drive PWB	
6	Replacing the engine PWB	The engine PWB is faulty.	Replace the engine PWB.	

C7860: Container right fan motor error

The lock-up was detected for 20s continuously when driving the fan motor.

Step	Check description	Assumed cause	Measures	Reference
1	Firmware upgrade	The firmware is not the latest version.	Please upgrade the engine firmware and motor CPU firmware to the latest version.	
2	Checking the connection	The connector is not connected properly, or the wire is faulty.	Clean the following connector terminal of the wire and reinsert them. If there is no continuity, replace the wire. • Container right fan motor - Feed drive PWB • Feed drive PWB - Engine PWB	
3	Checking the container right fan motor	The fan motor does not rotate properly due to dirt. Or it is faulty.	Execute U037 [Container Cooling]. If the container right fan motor does not work properly, clean it, check if the fan rotates manually, and then reinstall it. If it is not repaired, replace it.	
4	Replacing the feed drive PWB	The feed drive PWB is faulty.	Replace the feed drive PWB.	
5	Replacing the engine PWB	The engine PWB is faulty.	Replace the engine PWB.	

C7870: Eject front fan motor error

The lock-up was detected for 20s continuously when driving the fan motor.

Step	Check description	Assumed cause	Measures	Reference
1	Firmware upgrade	The firmware is not the latest version.	Please upgrade the engine firmware and motor CPU firmware to the latest version.	
2	Checking the connection	The connector is not connected properly, or the wire is faulty.	Clean the following connector terminal of the wire and reinsert them. If there is no continuity, replace the wire. • Eject front fan motor - Front drive PWB • Front drive PWB - Image drive PWB • Image drive PWB - Engine PWB	
3	Checking the fan motor before discharging	The fan motor does not rotate properly due to dirt. Or it is faulty.	Execute U037 [Exit Cooling 1/2]. If the eject front fan motor does not work properly, clean it, check if the fan rotates manually, and then reinstall it. If it is not repaired, replace it.	
4	Replacing the front drive PWB	The front drive PWB is faulty.	Replacing the front drive PWB	
5	Replacing the image drive PWB	The image drive PWB is faulty.	Replacing the image drive PWB	
6	Replacing the engine PWB	The engine PWB is faulty.	Replace the engine PWB.	

C7880: Eject rear fan motor error

The lock-up was detected for 20s continuously when driving the fan motor.

Step	Check description	Assumed cause	Measures	Reference
1	Firmware upgrade	The firmware is not the latest version.	Please upgrade the engine firmware and motor CPU firmware to the latest version.	
2	Checking the connection	The connector is not connected properly, or the wire is faulty.	Clean the following connector terminal of the wire and reinsert them. If there is no continuity, replace the wire. • Eject rear fan motor - Front drive PWB • Front drive PWB - Image drive PWB • Image drive PWB - Engine PWB	
3	Checking the fan motor behind the eject	The fan motor does not rotate properly due to dirt. Or it is faulty.	Execute U037 [Exit Cooling 1/2]. If the eject rear fan motor does not operate properly, clean it, check if the fan rotates manually, and then reinstall it. If it is not repaired, replace it.	
4	Replacing the front drive PWB	The front drive PWB is faulty.	Replacing the front drive PWB	
5	Replacing the image drive PWB	The image drive PWB is faulty.	Replacing the image drive PWB	
6	Replacing the engine PWB	The engine PWB is faulty.	Replace the engine PWB.	

C7901: Drum unit K EEPROM error

- Five times consecutive detection of no response from the device for more than 5ms on reading / writing.
- Data read in 2 places does not match 8 consecutive times.
- Writing data and reading data does not match 8 consecutive times.

Step	Check description	Assumed cause	Measures	Reference
1	Resetting the power	The data stored in the EEPROM in the drum unit is faulty.	Turn off the power switch and pull out the power plug. After passing 5s, reinsert the power plug and turn on the power switch.	
2	Reinstalling the drum unit	The drum unit is not properly installed.	Reinstall drum unit K to connect the connector firmly.	
3	Firmware upgrade	The firmware is not the latest version.	Upgrade the engine firmware to the latest version	
4	Checking the connection	The connector is not connected properly, or the wire is faulty.	Clean the terminal of the following wire connectors and reconnect the connectors. If there is no continuity, replace the wire. • Drum unit - Drum/developer relay PWB • Drum/developer relay PWB - Front drive PWB • Front drive PWB - Image drive PWB • Image drive PWB - Engine PWB	
5	Replacing the drum unit	The EEPROM in the drum unit is faulty.	Replace drum unit K.	
6	Replacing the drum/developer relay PWB	The drum/developer relay PWB is faulty.	Replace the drum/developer relay PWB.	
7	Replacing the front drive PWB	The front drive PWB is faulty.	Replacing the front drive PWB	
8	Replacing the image drive PWB	The image drive PWB is faulty.	Replacing the image drive PWB	
9	Replacing the engine PWB	The engine PWB is faulty.	Replace the engine PWB.	

C7911: Developer unit K EEPROM error

- Five times consecutive detection of no response from the device for more than 5ms on reading / writing.
- Data read in 2 places does not match 8 consecutive times.
- Writing data and reading data does not match 8 consecutive times.

Step	Check description	Assumed cause	Measures	Reference
1	Resetting the power	The data stored in the EEPROM in the developer unit is faulty.	Turn off the power switch and pull out the power plug. After passing 5s, reinsert the power plug and turn on the power switch.	
2	Reinstalling the developer unit	The developer unit is not properly installed.	Reinstall developer unit K so that the connector firmly connects.	
3	Firmware upgrade	The firmware is not the latest version.	Upgrade the engine firmware to the latest version	
4	Checking the connection	The connector is not connected properly, or the wire is faulty.	Clean the terminal of the following wire connectors and reconnect the connectors. If there is no continuity, replace the wire. • Developer fan motor - Drum/developer relay PWB • Drum/developer relay PWB - Image drive PWB • Image drive PWB - Engine PWB	
5	Replacing the developer unit	The EEPROM in the developer unit is faulty.	Replace developer unit K.	
6	Replacing the drum/developer relay PWB	The drum/developer relay PWB is faulty.	Replace the drum/developer relay PWB.	
7	Replacing the front drive PWB	The front drive PWB is faulty.	Replacing the front drive PWB	
8	Replacing the image drive PWB	The image drive PWB is faulty.	Replacing the image drive PWB	
9	Replacing the engine PWB	The engine PWB is faulty.	Replace the engine PWB.	

C7941: LSU EEPROM error 1

The data scanned in 2 places does not match 8 times in a row. The write data and the read data do not match 8 times in a row.
Condition: C, Y color lights when access is abnormal

Step	Check description	Assumed cause	Measures	Reference
1	Resetting the power	The EEPROM data in the LSU is faulty.	Turn off the power switch and pull out the power plug. After passing 5s, reinsert the power plug and turn on the power switch.	
2	Firmware upgrade	The firmware is not the latest version.	Upgrade the engine firmware to the latest version	
3	Checking the connection	The connector or FFC is not connected properly. Or, the wire or FFC is faulty.	Clean the following connector terminal of the wire and the FFC terminal, and reconnect the connector and FFC. If there is something wrong with the wire or FFC, replace it. • LSU (APC PWB) - Engine PWB • LSU (APC PWB) -Video PWB • Video PWB - Main PWB	
4	Replacing the LSU	The LSU (APC PWB) is faulty.	Replace the LSU.	
5	Replacing the Video PWB	The video PWB is faulty.	Replace the video PWB.	
6	Replacing the engine PWB	The engine PWB is faulty.	Replace the engine PWB.	
7	Replacing the main PWB	The main PWB is faulty.	Replace the main PWB.	

C7970: Weight sensor error

The condition where the sensor output value was below the specified value continued for 0.5sec.

Step	Check description	Assumed cause	Measures	Reference
1	Reinstalling the waste toner box	The waste toner box is not properly installed.	Reinstall the waste toner box into the main unit slowly, and then check if it moves vertically.	
2	Firmware upgrade	The engine firmware is faulty.	Upgrade the engine firmware to the latest version	
3	Checking the wire	The relay connector (engine PWB and waste toner motor/ weight sensor) is not connected properly or disconnected as excessive tensioning of the wire located at the back side of the waste toner box unit during maintenance work.	Realign the wire so that the wire of the relay connector at the waste toner box unit backside is not excessively strained. Then, reconnect the relay connector.	
4	Checking the weight sensor and the actuator	The connector is not properly connected. Or, the actuator is not attached properly.	Reconnect the connector of the weight sensor. And, reattach the weight sensor actuator and the return spring.	
5	Reattaching the weight detection spring	The weight detection spring has come off.	Detach the waste toner box unit and reattach the weight detection spring.	
6	Cleaning around the weight sensor	The weight sensor and surrounding parts are dirty.	Clean around the weight sensor with an air-blower.	
7	Executing U155	The calibration of the weight sensor is not executed properly.	Execute the waste toner calibration at U155.	
8	Replacing the waste toner box unit	The waste toner box unit is faulty.	Replace the waste toner box unit.	
9	Replacing the engine PWB	The engine PWB is faulty.	Replace the engine PWB.	

C8000: Finisher incompatibility detection

The finisher for other models is installed.

Step	Check description	Assumed cause	Measures	Reference
1	Checking the finisher	A finisher for other models is installed.	Install a finisher suitable for the product specifications.	

C8010: PH motor error 1

- When the PH motor is driven, the PH home position sensor does not turn on even after a specified time has passed.
- The pulse plate is not counted as a specified pulse even after a predetermined time has passed since the start of the punch operation. (Punch unit)

Step	Check description	Assumed cause	Measures	Reference
1	Firmware upgrade	The firmware is not the latest version.	Upgrade the PH firmware to the latest version.	
2	Checking the punch unit	The punch unit is not assembled properly.	If the punch unit does not move manually, repair the position where restricts the operation.	
3	Checking the PH cam drive parts	The PH cam drive parts are not attached properly, or faulty.	Reattach the PH cam drive parts. If not repaired, replace them.	
4	Checking the connection	The connector is not connected properly, or the wire is faulty.	Clean the terminal of the following wire connectors and reconnect the connectors. If there is no continuity, replace the wire. • PH motor - PH PWB • PH home position sensor - PH PWB • PH PWB - DF PWB	
5	Replacing the PH motor	The PH motor is faulty.	Execute U240 [Motor] > [Punch]. If the PH motor does not operate properly, replace it.	
6	Checking the PH home position sensor (excluding inner finisher)	The PH home position sensor is not properly attached, or it is faulty.	Execute U241 [Punch] > [Punch HP]. If the PH home position sensor does not operate properly, reattach it. If not repaired, replace it.	
7	Checking the PH home position sensor (inner finisher)	The PH home position sensor is not properly attached, or it is faulty.	Reinstall the PH home position sensor. If it does not repair, replace the PH home position sensor.	
8	Replacing the PH PWB	The PH PWB is faulty.	Replace the PH PWB.	
9	Replacing the DF PWB	The DF PWB is faulty.	Replace the DF PWB.	

C8020: PH motor error 2

Home position cannot be aligned within 3sec when the home position is initialized or when waiting. (Punch unit)

Step	Check description	Assumed cause	Measures	Reference
1	Firmware upgrade	The firmware is not the latest version.	Upgrade the PH firmware to the latest version.	
2	Checking the punch unit	The punch unit is not assembled properly.	If the punch unit does not move manually, repair the position where restricts the operation.	
3	Checking the PH cam drive parts	The PH cam drive parts are not attached properly, or faulty.	Reattach the PH cam drive parts. If not repaired, replace them.	
4	Checking the connection	The connector is not connected properly, or the wire is faulty.	Clean the terminal of the following wire connectors and reconnect the connectors. If there is no continuity, replace the wire. • PH motor - PH PWB • PH PWB - DF PWB	
5	Replacing the PH motor	The PH motor is faulty.	Execute U240 [Motor] > [Punch]. If the PH motor does not operate properly, replace it.	
6	Replacing the PH PWB	The PH PWB is faulty.	Replace the PH PWB.	
7	Replacing the DF PWB	The DF PWB is faulty.	Replace the DF PWB.	

C8030: PH motor error 3

When the home position is initialized, it does not turn off from the home position ON position within 50ms. (Punch unit)

Step	Check description	Assumed cause	Measures	Reference
1	Firmware upgrade	The firmware is not the latest version.	Upgrade the PH firmware to the latest version.	
2	Checking the punch unit	The punch unit is not assembled properly.	If the punch unit does not move manually, repair the position where restricts the operation.	
3	Checking the PH cam drive parts	The PH cam drive parts are not attached properly, or faulty.	Reattach the PH cam drive parts. If not repaired, replace them.	
4	Checking the connection	The connector is not connected properly, or the wire is faulty.	Clean the terminal of the following wire connectors and reconnect the connectors. If there is no continuity, replace the wire. • PH motor - PH PWB • PH PWB - DF PWB	
5	Replacing the PH motor	The PH motor is faulty.	Execute U240 [Motor] > [Punch]. If the PH motor does not operate properly, replace it.	
6	Replacing the PH PWB	The PH PWB is faulty.	Replace the PH PWB.	
7	Replacing the DF PWB	The DF PWB is faulty.	Replace the DF PWB.	

C8040: Punch slide motor error 1

HP cannot be detected even if the motor is driven a specified distance during HP movement operation. (100-sheet staple finisher + punch unit)

Step	Check description	Assumed cause	Measures	Reference
1	Firmware upgrade	The firmware is not the latest version.	Upgrade the PH firmware to the latest version.	
2	Checking the punch unit	The punch unit is not assembled properly.	If the punch unit does not move manually, repair the position where restricts the operation.	
3	Checking the PH cam drive parts	The PH cam drive parts are not attached properly, or faulty.	Reattach the PH cam drive parts. If not repaired, replace them.	
4	Checking the connection	The connector is not connected properly, or the wire is faulty.	Clean the terminal of the following wire connectors and reconnect the connectors. If there is no continuity, replace the wire. • PH slide motor - PH PWB • PH slide sensor - PH PWB • PH PWB - DF PWB	
5	Replacing the PH slide motor	The PH slide motor is faulty.	Execute U240 [Motor] > [Punch Move]. If the PH slide motor does not operate properly, replace it.	
6	Checking the PH slide sensor	The PH slide sensor is not properly attached, or it is faulty.	Reinstall the PH slide sensor. If it is not repaired, replace it.	
7	Replacing the PH PWB	The PH PWB is faulty.	Replace the PH PWB.	
8	Replacing the DF PWB	The DF PWB is faulty.	Replace the DF PWB.	

C8050: Punch slide motor error 2

During the paper edge detection operation, the paper edge cannot be detected even if the motor is driven a specified distance. (100-sheet staple finisher + punch unit)

Step	Check description	Assumed cause	Measures	Reference
1	Firmware upgrade	The firmware is not the latest version.	Upgrade the PH firmware to the latest version.	
2	Checking the punch unit	The punch unit is not assembled properly.	If the punch unit does not move manually, repair the position where restricts the operation.	
3	Checking the PH cam drive parts	The PH cam drive parts are not attached properly, or faulty.	Reattach the PH cam drive parts. If not repaired, replace them.	
4	Checking the connection	The connector is not connected properly, or the wire is faulty.	Clean the terminal of the following wire connectors and reconnect the connectors. If there is no continuity, replace the wire. • PH slide motor - PH PWB • PH paper edge sensor 1, 2 - PH PWB • PH PWB - DF PWB	
5	Replacing the PH slide motor	The PH slide motor is faulty.	Execute U240 [Motor] > [Punch Move]. If the PH slide motor does not operate properly, replace it.	
6	Checking the PH paper edge sensor 1, 2	The PH paper edge sensor 1, 2 is not attached properly, or it is faulty.	Execute U241 [Punch]> [Edge Face1] or [Edge Face2]. If it does not work properly, reattach the PH paper edge sensors 1 and 2. If it is not repaired, replace it.	
7	Replacing the PH PWB	The PH PWB is faulty.	Replace the PH PWB.	
8	Replacing the DF PWB	The DF PWB is faulty.	Replace the DF PWB.	

C8090: DF paddle motor error

- When driving the DF paddle motor, the DF paddle sensor does not turn on even after 1sec has passed.
- Even if the DF paddle motor is driven for 1sec from the condition where the DF paddle sensor is ON, the DF paddle sensor does not turn OFF. (Excluding 100-sheet staple finisher)

Step	Check description	Assumed cause	Measures	Reference
1	Checking the DF paddle drive parts	The DF paddle drive parts are not properly attached, or it is faulty.	Reattach the DF paddle drive parts. If not repaired, replace them.	
2	Checking the connection	The connector is not connected properly, or the wire is faulty.	Clean the terminal of the following wire connectors and reconnect the connectors. If there is no continuity, replace the wire. • DF paddle motor - DF PWB • DF paddle sensor - DF PWB	
3	Replacing the DF paddle motor	The DF paddle motor is faulty.	Execute U240 [Motor] > [Beat]. If the DF paddle motor does not operate properly, replace it.	
4	Replacing the DF paddle sensor	The DF paddle sensor is faulty.	Execute U241 [Finisher] > [Lead Paddle]. If the DF paddle sensor does not operate properly, replace it.	
5	Replacing the DF PWB	The DF PWB is faulty.	Replace the DF PWB.	

C8090: PH main program error / Punch unit communication error

- There was something wrong with the main program when the power was turned on.
- A communication error occurred 10 times in a row after the firmware version was read from the punch unit. (100-sheet staple finisher + punch unit)

Step	Check description	Assumed cause	Measures	Reference
1	Checking the connection	The connector is not connected properly, or the wire is faulty.	Clean the terminal of the following wire connectors and reconnect the connectors. If there is no continuity, replace the wire. • PH PWB - DF PWB	
2	Replacing the PH PWB	The PH PWB is faulty.	Replace the PH PWB.	
3	Replacing the DF PWB	The DF PWB is faulty.	Replace the DF PWB.	

C8100: DF exit release motor error

- When the DF eject release motor is driven, the DF bundle eject sensor does not turn on even after 1sec has passed.
- The DF bundle eject sensor does not turn off even if the DF eject release motor is driven for 1sec from the condition where the DF bundle eject sensor is ON. (Excluding 100-sheet staple finisher)

Step	Check description	Assumed cause	Measures	Reference
1	Checking the DF bundle exit unit	The exit guide in the DF bundle exit unit is deformed.	Repair the DF bundle exit unit.	
2	Checking the DF bundle exit unit drive parts	The DF bundle exit unit drive parts are not properly attached, or they are faulty.	Reattach the DF bundle exit unit drive parts. If not repaired, replace them.	
3	Checking the connection	The connector is not connected properly, or the wire is faulty.	Clean the terminal of the following wire connectors and reconnect the connectors. If there is no continuity, replace the wire.. • DF exit release motor - DF PWB • DF bundle exit sensor - DF PWB	
4	Replacing the DF exit release motor	The DF exit release motor is faulty.	Execute U240 [Motor]> [Eject Unlock (HP)]. If it does not operate properly, replace the DF eject release motor.	
5	Checking the DF bundle exit sensor	The DF bundle exit sensor is not attached properly or faulty.	Execute U241 [Finisher] > [Bundle Eject HP]. If the DF bundle exit sensor does not operate properly, reattach it and reconnect the connector. If not repaired, replace the sensor.	
6	Replacing the DF PWB	The DF PWB is faulty.	Replace the DF PWB.	

C8110: DF shift motor 2 error

Even if the DF shift motor 2 is driven in the HP detection direction for 3sec, the DF front shift HP sensor does not turn on. (100-sheet staple finisher)

Step	Check description	Assumed cause	Measures	Reference
1	Checking the front shift guide	The front shift guide is not assembled properly.	If the front shift guide does not move manually, repair the position where restricts the operation.	
2	Checking the front shift guide drive parts	The front shift guide drive parts are not properly attached, or they are faulty.	Reattach the front shift guide drive parts. If not repaired, replace them.	
3	Checking the connection	The connector is not connected properly, or the wire is faulty.	Clean the following connector terminal of the wire and reinsert them. If there is no continuity, replace the wire. • DF shift motor 2 - DF PWB • DF front shift HP sensor - DF PWB	
4	Replacing DF shift motor 2	DF shift motor 2 is faulty.	Execute U240 [Motor] > [Sort Test]. If DF shift motor 2 if it does not operate properly, replace it.	
5	Checking the DF front shift HP sensor	DF front shift HP sensor is not installed properly or it is faulty.	Execute U241 [Finisher] > [Shift Front HP]. If the DF front shift HP sensor does not work properly, reinstall it and reconnect the connector. If it is not repaired, replace it.	
6	Replacing the DF PWB	The DF PWB is faulty.	Replace the DF PWB.	

C8120: DF shift motor 1 error

Even if the DF shift motor 1 is driven in the HP detection direction for 3sec, the shift HP sensor does not turn on after DF. (100-sheet staple finisher)

Step	Check description	Assumed cause	Measures	Reference
1	Checking the rear shift guide	The rear shift guide is not assembled properly.	If the rear shift guide does not move manually, repair the position where restricts the operation.	
2	Checking the rear shift guide drive parts	The rear shift guide drive parts are not properly attached, or they are faulty.	Reattach the rear shift guide drive parts. If not repaired, replace them.	
3	Checking the connection	The connector is not connected properly, or the wire is faulty.	Clean the following connector terminal of the wire and reinsert them. If there is no continuity, replace the wire. • DF shift motor 1 - DF PWB • DF rear shift HP sensor - DF PWB	
4	Checking DF shift motor 1	DF shift motor 1 is faulty.	Execute U240 [Motor] > [Sort Test]. If DF shift motor 1 if it does not operate properly, replace it.	
5	Checking the DF rear shift HP sensor	DF Post-shift HP sensor is not installed properly or it is faulty.	Execute U241 [Finisher] > [Shift Tail HP]. If the DF rear shift HP sensor does not work properly, reinstall and reconnect the connector. If it is not repaired, replace it.	
6	Replacing the DF PWB	The DF PWB is faulty.	Replace the DF PWB.	

C8130: DF shift release motor error

4,000 sheets Finisher:

- The DF shift release sensor does not turn on even if the DF shift release motor is driven in the HP detection direction for 3sec.
- The DF shift release sensor does not turn off even if the DF shift release motor is driven in the HP detection OFF direction for 3sec.

100-sheet staple finisher:

- Even if the DF shift release motor is driven in the direction of the DF shift release sensor for 3sec, the DF shift release sensor does not change. (JAM for the first time)
- Even if the DF shift release motor is driven in the direction of fluctuation of the DF shift set sensor for 3sec, the sensor does not change. (The first time is JAM)

Step	Check description	Assumed cause	Measures	Reference
1	Checking the rear shift guide	The rear shift guide is not assembled properly.	If the rear shift guide does not move manually, repair the position where restricts the operation.	
2	Checking the rear shift guide drive parts	The rear shift guide drive parts are not properly attached, or they are faulty.	Reattach the rear shift guide drive parts. If not repaired, replace them.	
3	Checking the connection (4,000 sheets finisher)	The connector is not connected properly, or the wire is faulty.	Clean the terminal of the following wire connectors and reconnect the connectors. If there is no continuity, replace the wire. • DF shift release motor - DF PWB • DF shift release sensor - DF PWB	
4	Checking the connection (100-sheet staple finisher)	The connector is not connected properly, or the wire is faulty.	Clean the following connector terminal of the wire and reinsert them. If there is no continuity, replace the wire. • DF shift release motor - DF PWB • DF shift release sensor - DF PWB • DF shift set sensor - DF PWB	
5	Checking the DF shift release motor	The DF shift release motor is faulty.	Execute U240 [Motor] > [Sort Test]. If the DF shift release motor does not operate properly, replace it.	
6	Checking the DF shift release sensor	The DF shift release sensor is not properly attached, or it is faulty.	Execute U241 [Finisher] > [Shift Unlock HP]. If the DF shift release sensor does not operate properly, reattach it and reconnect the connector. If not repaired, replace the sensor.	
7	Checking the DF shift set sensor (100-sheet staple finisher)	The DF shift set sensor is not installed properly or it is faulty with it.	Execute U241 [Finisher]> [Shift Set]. If the DF shift set sensor does not work properly, reinstall it and reconnect the connector. If it is not repaired, replace it.	
8	Replacing the DF PWB	The DF PWB is faulty.	Replace the DF PWB.	

C8140: DF tray error 1

When the DF tray A/DF tray is raised, the DF tray sensor or the DF tray top sensor does not turn on even after the specified time has passed. (Excluding inner finisher)

Step	Check description	Assumed cause	Measures	Reference
1	Checking DF tray A / DF tray	DF tray A / DF tray is not assembled properly.	If DF tray A or the DF tray does not move up and down manually, repair the position where restricts the operation.	
2	Checking DF tray A / DF tray drive parts	The DF tray A / DF tray drive parts are not properly attached, or they are faulty.	Reattach the DF tray A / DF tray drive parts. If not repaired, replace them.	
3	Checking the connection (1,000 sheet finisher / 100-sheet staple finisher)	The connector is not connected properly, or the wire is faulty.	Clean the following connector terminal of the wire and reinsert them. If there is no continuity, replace the wire. • DF tray motor - DF PWB • DF tray sensor 1 - DF PWB • DF tray Top Sensor 1, 2 - DF PWB	
4	Checking the connection (4,000 sheets finisher)	The connector is not connected properly, or the wire is faulty.	Clean the following connector terminal of the wire and reinsert them. If there is no continuity, replace the wire. • DF Tray Motor - DF PWB • DF tray sensor 1, 2 - DF PWB • DF tray upper surface sensor 1, 2 - DF PWB	
5	Replacing the DF tray motor	The DF tray motor is faulty.	Execute U240 [Motor] > [Tray]. If the DF tray motor does not operate properly, replace it.	
6	Checking the DF tray sensor (1,000 sheet finisher / 100-sheet staple finisher)	DF tray sensor 1 is not properly attached, or it is faulty.	Execute U241 [Finisher] > [Tray U-Limit]. If DF tray sensor 1 does not operate properly, reattach it and reconnect the connector. If not repaired, replace the sensor.	
7	Checking the DF tray sensor (4,000 sheets finisher)	DF tray sensors 1, 2 are not properly attached, or they are faulty.	Execute U241 [Finisher] > [Tray U-Limit] or [Tray HP2]. If DF tray sensor 1 or 2 does not operate properly, reattach it and reconnect the connector. If not repaired, replace the sensor.	
8	Checking DF tray upper side sensors 1, 2	DF tray upper surface sensors 1, 2 are not properly attached, or they are faulty.	Execute U241 [Finisher] > [Tray Top]. If DF tray upper surface sensor 1 or 2 does not operate properly, reattach it and reconnect the connector. If not repaired, replace the sensor.	
9	Replacing the DF PWB	The DF PWB is faulty.	Replace the DF PWB.	

C8140: DF tray error 1

When the DF tray is raised, ON/OFF of the DF paper retainer sensor 1 or the DF paper retainer sensor 2 is not detected even after a predetermined time has elapsed. (Inner finisher)

Step	Check description	Assumed cause	Measures	Reference
1	Checking the DF tray	The DF tray is not assembled properly.	If the DF tray does not move up and down manually, repair the position where restricts the operation.	
2	Checking the DF tray drive parts	The DF tray drive parts are not properly attached, or they are faulty.	Reattach the DF tray drive parts. If not repaired, replace them.	
3	Checking the connection	The connector is not connected properly, or the wire is faulty.	Clean the terminal of the following wire connectors and reconnect the connectors. If there is no continuity, replace the wire. • DF tray motor - DF PWB • DF paper holding sensor 1, 2 - DF PWB	
4	Replacing the DF tray motor	The DF tray motor is faulty.	Execute U240 [Motor] > [Tray]. If the DF tray motor does not operate properly, replace it.	
5	Checking DF paper holding sensors 1, 2	DF paper holding sensors 1, 2 are not properly attached, or they are faulty.	Execute U241 [Finisher] > [Press Paper Up] or [Press Paper Down]. If DF paper holding sensor 1 or 2 does not operate properly, reattach it and reconnect the connector. If not repaired, replace the sensor.	
6	Replacing the DF PWB	The DF PWB is faulty.	Replace the DF PWB.	

C8150: DF tray error 2

When the DF tray is lowered, the DF tray sensor or the DF tray top sensor does not turn off even after a specified time has passed. (1, 000 sheets finisher)

Step	Check description	Assumed cause	Measures	Reference
1	Checking the DF tray	The DF tray is not assembled properly.	If the DF tray does not move up and down manually, repair the position where restricts the operation.	
2	Checking the DF tray drive parts	The DF tray drive parts are not properly attached, or they are faulty.	Reattach the DF tray drive parts. If not repaired, replace them.	
3	Checking the connection	The connector is not connected properly, or the wire is faulty.	Clean the following connector terminal of the wire and reinsert them. If there is no continuity, replace the wire. • DF tray motor - DF PWB • DF tray sensor 1 - DF PWB • DF tray upper surface sensor 1, 2 - DF PWB	
4	Replacing the DF tray motor	The DF tray motor is faulty.	Execute U240 [Motor] > [Tray]. If the DF tray motor does not operate properly, replace it.	
5	Checking DF tray sensor 1	DF tray sensor 1 is not properly attached, or it is faulty.	Execute U241 [Finisher] > [Tray U-Limit]. If DF tray sensor 1 does not operate properly, reattach it and reconnect the connector. If not repaired, replace the sensor.	
6	Checking DF tray upper side sensors 1, 2	DF tray upper surface sensors 1, 2 are not properly attached, or they are faulty.	Execute U241 [Finisher] > [Tray Top]. If DF tray upper surface sensor 1 or 2 does not operate properly, reattach it and reconnect the connector. If not repaired, replace the sensor.	
7	Replacing the DF PWB	The DF PWB is faulty.	Replace the DF PWB.	

C8150: DF tray error 2

When the DF tray A is lowered, the DF tray sensor or the DF tray top sensor does not turn off even after a specified time has elapsed. (4, 000 sheets finisher)

Step	Check description	Assumed cause	Measures	Reference
1	Checking DF tray A	DF tray A is not assembled properly.	If DF tray A does not move up and down manually, repair the position where restricts the operation.	
2	Checking the DF tray A drive parts	The DF tray A drive parts are not properly attached, or they are faulty.	Reattach the DF tray A drive parts. If not repaired, replace them.	
3	Checking the connection	The connector is not connected properly, or the wire is faulty.	Clean the following connector terminal of the wire and reinsert them. If there is no continuity, replace the wire. • DF Tray Motor - DF PWB • DF Tray Sensor 1 - DF PWB • DF Tray Sensor 2 - DF PWB • DF Tray Top Sensor 1, 2 - DF PWB	
4	Replacing the DF tray motor	The DF tray motor is faulty.	Execute U240 [Motor] > [Tray]. If the DF tray motor does not operate properly, replace it.	
5	Checking DF tray sensors 1, 2	DF tray sensors 1, 2 are not properly attached, or they are faulty.	Execute U241 [Finisher] > [Tray U-Limit] or [Tray HP2]. If DF tray sensor 1 or 2 does not operate properly, reattach it and reconnect the connector. If not repaired, replace the sensor.	
6	Checking DF tray upper side sensors 1, 2	DF tray upper surface sensors 1, 2 are not properly attached, or they are faulty.	Execute U241 [Finisher] > [Tray Top]. If DF tray upper surface sensor 1 or 2 does not operate properly, reattach it and reconnect the connector. If not repaired, replace the sensor.	
7	Replacing the DF PWB	The DF PWB is faulty.	Replace the DF PWB.	

C8150: DF tray error 2

When the DF tray A is lowered, the DF tray sensor 4 or the DF tray sensor 5 (when the folding unit is attached) does not turn on even after a predetermined time has elapsed. (100-sheet staple finisher)

Step	Check description	Assumed cause	Measures	Reference
1	Checking DF tray A	DF tray A is not assembled properly.	If DF tray A does not move up and down manually, repair the position where restricts the operation.	
2	Checking the DF tray A drive parts	The DF tray A drive parts are not properly attached, or they are faulty.	Reattach the DF tray A drive parts. If not repaired, replace them.	
3	Checking the connection	The connector is not connected properly, or the wire is faulty.	Clean the following connector terminal of the wire and reinsert them. If there is no continuity, replace the wire. • DF tray motor - DF PWB • DF tray sensor 4 - DF PWB • DF Tray Sensor 5 - DF PWB (when folding unit is installed)	
4	Replacing the DF tray motor	The DF tray motor is faulty.	Execute U240 [Motor] > [Tray]. If the DF tray motor does not operate properly, replace it.	
5	Checking DF tray sensors 4, 5	DF tray sensors 4, 5 are not properly attached, or they are faulty.	Execute U241 [Finisher]> [Tray L-Limit] or [Tray L-Limit (BL)]. If the DF tray sensor 4 or DF tray sensor 5 (when the folding unit is installed) does not work properly, reinstall it and reconnect the connector. If it is not repaired, replace it.	
6	Replacing the DF PWB	The DF PWB is faulty.	Replace the DF PWB.	

C8160: DF tray error 3

When the DF tray is lowered, the DF tray sensor 3 does not turn on even after a predetermined time has elapsed. (1, 000 sheets finisher)

Step	Check description	Assumed cause	Measures	Reference
1	Checking the DF tray	The DF tray is not assembled properly.	If the DF tray does not move up and down manually, repair the position where restricts the operation.	
2	Checking the DF tray drive parts	The DF tray drive parts are not properly attached, or they are faulty.	Reattach the DF tray drive parts. If not repaired, replace them.	
3	Checking the connection	The connector is not connected properly, or the wire is faulty.	Clean the terminal of the following wire connectors and reconnect the connectors. If there is no continuity, replace the wire. • DF tray motor - DF PWB • DF tray sensor 3 - DF PWB	
4	Checking the DF tray motor	The DF tray motor is faulty.	Execute U240 [Motor] > [Tray]. If the DF tray motor does not operate properly, replace it.	
5	Checking DF tray sensor 3	DF tray sensor 3 is not properly attached, or it is faulty.	Execute U241 [Finisher]> [Tray L-Limit]. If the DF tray sensor 3 does not work properly, reinstall it and reconnect the connector. If it is not repaired, replace it.	
6	Replacing the DF PWB	The DF PWB is faulty.	Replace the DF PWB.	

C8160: DF tray error 3

When the DF tray A is lowered, the DF tray sensor 4 or the DF tray sensor 5 (when the folding unit is attached) does not turn on even after a predetermined time has elapsed. (4, 000 sheets finisher)

Step	Check description	Assumed cause	Measures	Reference
1	Checking DF tray A	DF tray A is not assembled properly.	If DF tray A does not move up and down manually, repair the position where restricts the operation.	
2	Checking the DF tray A drive parts	The DF tray A drive parts are not properly attached, or they are faulty.	Reattach the DF tray A drive parts. If not repaired, replace them.	
3	Checking the connection	The connector is not connected properly, or the wire is faulty.	Clean the following connector terminal of the wire and reinsert them. If there is no continuity, replace the wire. • DF tray motor - DF PWB • DF tray sensor 4 - DF PWB • DF Tray Sensor 5 - DF PWB (when folding unit is installed)	
4	Checking the DF tray motor	The DF tray motor is faulty.	Execute U240 [Motor] > [Tray]. If the DF tray motor does not operate properly, replace it.	
5	Checking DF tray sensors 4, 5	DF tray sensors 4, 5 are not properly attached, or they are faulty.	Execute U241 [Finisher]> [Tray L-Limit] or [Tray L-Limit (BL)]. If the DF tray sensor 4 or DF tray sensor 5 (when the folding unit is installed) does not work properly, reinstall it and reconnect the connector. If it is not repaired, replace it.	
6	Replacing the DF PWB	The DF PWB is faulty.	Replace the DF PWB.	

C8160: DF tray error 3

When the DF tray is lowered, the DF tray sensor does not turn on even after the specified time has passed. (Inner finisher)

Step	Check description	Assumed cause	Measures	Reference
1	Checking the DF tray	The DF tray is not assembled properly.	If the DF tray does not move up and down manually, repair the position where restricts the operation.	
2	Checking the DF tray drive parts	The DF tray drive parts are not properly attached, or they are faulty.	Reattach the DF tray drive parts. If not repaired, replace them.	
3	Checking the connection	The connector is not connected properly, or the wire is faulty.	Clean the terminal of the following wire connectors and reconnect the connectors. If there is no continuity, replace the wire. • DF tray motor - DF PWB • DF tray sensor - DF PWB	
4	Checking the DF tray motor	The DF tray motor is faulty.	Execute U240 [Motor] > [Tray]. If the DF tray motor does not operate properly, replace it.	
5	Checking the DF tray sensor	The DF tray sensor is not properly attached, or it is faulty.	Execute U241 [Finisher] > [Tray L-Limit]. If the DF tray sensor does not operate properly, reattach it and reconnect the connector. If not repaired, replace the sensor.	
6	Replacing the DF PWB	The DF PWB is faulty.	Replace the DF PWB.	

C8170: DF side registration motor 1 error 1

Even if the DF width adjustment motor 1 is driven in the HP detection direction for 3sec, the DF width adjustment sensor 1 does not turn on. (Excluding 100-sheet staple finisher)

Step	Check description	Assumed cause	Measures	Reference
1	Checking the front DF side registration guide	The front DF side registration guide is not assembled properly.	If the DF side registration front guide does not move manually, repair the position where restricts the operation.	
2	Checking the front DF side registration guide drive parts	The DF side registration front guide drive parts are not properly attached, or they are faulty.	Reattach the DF side registration front guide drive parts. If not repaired, replace them.	
3	Checking the connection	The connector is not connected properly, or the wire is faulty.	Clean the terminal of the following wire connectors and reconnect the connectors. If there is no continuity, replace the wire. • DF side registration motor 1 - DF PWB • DF side registration sensor 1 - DF PWB	
4	Replacing DF side registration motor 1	DF side registration motor 1 is faulty.	Execute U240 [Motor]> [Width Test (A3)] or [Width Test (LD)]. If it does not work properly, replace the DF width adjustment motor 1.	
5	Checking DF side registration sensor 1	DF side registration sensor 1 is not properly attached, or it is faulty.	Execute U241 [Finisher] > [Width Front HP]. If DF side registration sensor 1 does not operate properly, reattach it and reconnect the connector. If not repaired, replace the motor.	
6	Replacing the DF PWB	The DF PWB is faulty.	Replace the DF PWB.	

C8180: DF side registration motor 1 error 2

J6810 / J6811 / J6812 (JAM before DF width adjustment) was detected twice in a row. (Excluding 100-sheet staple finisher)

Step	Check description	Assumed cause	Measures	Reference
1	Checking the front DF side registration guide	The front DF side registration guide is not assembled properly.	If the DF side registration front guide does not move manually, repair the position where restricts the operation.	
2	Checking the front DF side registration guide drive parts	The DF side registration front guide drive parts are not properly attached, or they are faulty.	Reattach the DF side registration front guide drive parts. If not repaired, replace them.	
3	Checking the connection	The connector is not connected properly, or the wire is faulty.	Clean the terminal of the following wire connectors and reconnect the connectors. If there is no continuity, replace the wire. • DF side registration motor 1 - DF PWB • DF side registration sensor 1 - DF PWB	
4	Checking DF side registration motor 1	DF side registration motor 1 is faulty.	Execute U240 [Motor]> [Width Test (A3)] or [Width Test (LD)]. If it does not work properly, replace the DF width adjustment motor 1.	
5	Checking DF side registration sensor 1	DF side registration sensor 1 is not properly attached, or it is faulty.	Execute U241 [Finisher] > [Width Front HP]. If DF side registration sensor 1 does not operate properly, reattach it and reconnect the connector. If not repaired, replace the motor.	
6	Replacing the DF PWB	The DF PWB is faulty.	Replace the DF PWB.	

C8190: DF side registration motor 2 error 1

Even if the DF width adjustment motor 2 is driven in the HP detection direction for 3sec, the DF width adjustment sensor 2 does not turn on. (Excluding 100-sheet staple finisher)

Step	Check description	Assumed cause	Measures	Reference
1	Checking the rear DF side registration guide	The rear DF side registration guide is not assembled properly.	If the DF side registration rear guide does not move manually, repair the position where restricts the operation.	
2	Checking the rear DF side registration guide drive parts	The DF side registration rear guide drive parts are not properly attached, or they are faulty.	Reattach the DF side registration rear guide drive parts. If not repaired, replace them.	
3	Checking the connection	The connector is not connected properly, or the wire is faulty.	Clean the terminal of the following wire connectors and reconnect the connectors. If there is no continuity, replace the wire. • DF side registration motor 2 - DF PWB • DF side registration sensor 2 - DF PWB	
4	Replacing DF side registration motor 2	DF side registration motor 2 is faulty.	Execute U240 [Motor]> [Width Test (A3)] or [Width Test (LD)]. If it does not work properly, replace the DF width adjustment motor 2.	
5	Checking DF side registration sensor 2	DF side registration sensor 2 is not properly attached, or it is faulty.	Execute U241 [Finisher] > [Width Trail HP]. If DF side registration sensor 2 does not operate properly, reattach it and reconnect the connector. If not repaired, replace the motor.	
6	Replacing the DF PWB	The DF PWB is faulty.	Replace the DF PWB.	

C8200: DF side registration motor 2 error 2

J6910 / J6911 / J6912 (JAM after DF width adjustment) was detected twice in a row. (Excluding 100-sheet staple finisher)

Step	Check description	Assumed cause	Measures	Reference
1	Checking the rear DF side registration guide	The rear DF side registration guide is not assembled properly.	If the DF side registration rear guide does not move manually, repair the position where restricts the operation.	
2	Checking the rear DF side registration guide drive parts	The DF side registration rear guide drive parts are not properly attached, or they are faulty.	Reattach the DF side registration rear guide drive parts. If not repaired, replace them.	
3	Checking the connection	The connector is not connected properly, or the wire is faulty.	Clean the terminal of the following wire connectors and reconnect the connectors. If there is no continuity, replace the wire. • DF side registration motor 2 - DF PWB • DF side registration sensor 2 - DF PWB	
4	Checking DF side registration motor 2	DF side registration motor 2 is faulty.	Execute U240 [Motor]> [Width Test (A3)] or [Width Test (LD)]. If it does not work properly, replace the DF width adjustment motor 2.	
5	Checking DF side registration sensor 2	DF width adjustment sensor 2 is not installed properly. Or, it is faulty.	Execute U241 [Finisher] > [Width Trail HP]. If DF side registration sensor 2 does not operate properly, reattach it and reconnect the connector. If not repaired, replace the motor.	
6	Replacing the DF PWB	The DF PWB is faulty.	Replace the DF PWB.	

C8210: DF slide motor front/rear error

If the operation of returning to the home position is performed during the initial operation, the home position cannot be detected even after a predetermined time has elapsed.

Step	Check description	Assumed cause	Measures	Reference
1	Checking the DF staple unit	The DF staple unit is not assembled properly.	If the DF staple unit does not move front and back manually, repair the position where restricts the operation.	
2	Checking the DF staple unit	Parts around the clincher shim of the DF staple unit have fallen off.	Remove the fallen peripheral parts and replace the DF staple unit.	
3	Checking the DF staple unit drive parts	The DF staple unit drive parts are not properly attached, or they are faulty.	Reattach the DF staple unit drive parts. If not repaired, replace them.	
4	Checking the connection	The connector is not connected properly, or the wire is faulty.	Clean the terminal of the following wire connectors and reconnect the connectors. If there is no continuity, replace the wire. • DF slide motor - DF PWB • DF slide sensor - DF PWB	
5	Replacing the DF slide motor	The DF slide motor is faulty.	Execute U240 [Motor]> [Staple Move]. If the DF slide motor does not work properly, replace it.	
6	Checking the DF slide sensor	The DF slide sensor is not installed properly or it is faulty with it.	Execute U241 [Finisher]> [Staple HP]. Reinstall the DF slide sensor. If it is not repaired, replace it.	
7	Replacing the DF PWB	The DF PWB is faulty.	Replace the DF PWB.	

C8230: DF staple motor error 1

- J7000 / J7001 / J7002 (DF staple JAM) was detected twice in a row. (Excluding 100-sheet staple finisher)
- The home position is not detected even after a predetermined time has passed after the motor was started. (1st time is JAM) (100-sheet staple finisher)

Step	Check description	Assumed cause	Measures	Reference
1	Checking the DF staple unit	The DF staple unit is not assembled properly.	If the DF staple can't be done without paper jam, repair the position where restricts the operation.	
2	Checking the connection	The connector is not connected properly, or the wire is faulty.	Clean the terminal of the following wire connectors and reconnect the connectors. If there is no continuity, replace the wire. • DF staple unit - DF PWB	
3	Checking the DF staple unit	The DF staple unit is faulty.	Replace the DF staple unit. If any parts around the clincher shim of the DF staple unit have fallen off, remove them.	
4	Replacing the DF PWB	The DF PWB is faulty.	Replace the DF PWB.	

C8250: DF tray error 4

While the DF tray motor was operating, the lock detection signal was 0.7V or less for 10sec. Continuously. (1,000 sheets finisher, inner finisher)

Step	Check description	Assumed cause	Measures	Reference
1	Checking the DF tray	The DF tray is not assembled properly.	If the DF tray does not move up and down manually, repair the position where restricts the operation.	
2	Checking the DF tray drive parts	The DF tray drive parts are not properly attached, or they are faulty.	Reattach the DF tray drive parts. If not repaired, replace them.	
3	Checking the connection	The connector is not connected properly, or the wire is faulty.	Clean the terminal of the following wire connectors and reconnect the connectors. If there is no continuity, replace the wire. • DF tray motor - DF PWB	
4	Replacing the DF tray motor	The DF tray motor is faulty.	Execute U240 [Motor] > [Tray]. If the DF tray motor does not operate properly, replace it.	
5	Replacing the DF PWB	The DF PWB is faulty.	Replace the DF PWB.	

C8260: DF middle motor HP detection error

J7900 / J7901 / J7902 (middle paddle JAM) was detected twice in a row. (Excluding 100-sheet staple finisher)

Step	Check description	Assumed cause	Measures	Reference
1	Checking the DF paddle drive parts	The DF paddle drive parts are not properly attached, or it is faulty.	Reattach or replace the DF paddle drive parts.	
2	Checking the connection	The connector is not connected properly, or the wire is faulty.	Clean the terminal of the following wire connectors and reconnect the connectors. If there is no continuity, replace the wire. • DF middle motor - DF PWB • DF paddle sensor - DF PWB	
3	Replacing the DF middle motor	The DF middle motor is faulty.	Execute U240 [Motor] > [Middle (H)] or [Middle (L)]. If it does not work properly, replace the DF middle motor.	
4	Checking the DF paddle sensor	The DF paddle sensor is not properly attached, or it is faulty.	Execute U241 [Finisher] > [Lead Paddle]. If the DF paddle sensor does not operate properly, reattach it and reconnect the connector. If not repaired, replace the sensor.	
5	Replacing the DF PWB	The DF PWB is faulty.	Replace the DF PWB.	

C8300: BF main program error / Folding unit communication error

- There was something wrong with the main program when the power was turned on.
- A communication error occurred 10 times in a row after the connection with the folding unit was confirmed. (4,000 sheets finisher / 100-sheet staple finisher + folding unit)

Step	Check description	Assumed cause	Measures	Reference
1	Checking the BF set switch	The BF set switch is not attached properly.	Reattach the BF set switch.	
2	Checking the connection	The connector is not connected properly, or the wire is faulty.	Clean the following connector terminal of the wire and reinsert them. If there is no continuity, replace the wire. • BF set switch - BF PWB • BF PWB - DF PWB	
3	Replacing the BF set switch	The BF set switch is faulty.	Execute U241 [Booklet] > [Set]. If the BF set switch does not operate properly, replace it.	
4	Replacing the BF PWB	The BF PWB is faulty.	Replace the BF PWB.	
5	Replacing the DF PWB	The DF PWB is faulty.	Replace the DF PWB.	

C8310: BF side registration motor 2 error

At the time of initial operation, the home position cannot be detected even after 1sec has passed. (4,000 sheets finisher / 100-sheet staple finisher + folding unit)

Step	Check description	Assumed cause	Measures	Reference
1	Checking the upper BF side registration guide	The upper BF side registration guide is not assembled properly.	If the BF side registration upper guide does not move front and back manually, repair the position where restricts the operation.	
2	Checking the upper BF side registration guide drive parts	The BF side registration upper guide drive parts are not properly attached, or they are faulty.	Reattach the BF side registration upper guide drive parts. If not repaired, replace them.	
3	Checking the connection	The connector is not connected properly, or the wire is faulty.	Clean the terminal of the following wire connectors and reconnect the connectors. If there is no continuity, replace the wire. • BF side registration motor 2 - BF PWB • BF side registration sensor 2 - BF PWB	
4	Replacing BF side registration motor 2	BF side registration motor 2 is faulty.	Execute U240 [Booklet]> [Width Test (A3)] or [Width Test (LD)]. If it does not operate properly, replace the BF width adjustment motor 2.	
5	Checking BF side registration sensor 2	BF side registration sensor 2 is not properly attached, or it is faulty.	Execute U241 [Booklet] > [Width UP HP]. If the BF width adjustment sensor 2 does not operate properly, reinstall it and reconnect the connector. If it is not repaired, replace it.	
6	Replacing the BF PWB	The BF PWB is faulty.	Replace the BF PWB.	

C8320: BF adjustment motor error

At the time of initial operation, the home position cannot be detected even after 2.5sec have passed. (4,000 sheets finisher / 100-sheet staple finisher + folding unit)

Step	Check description	Assumed cause	Measures	Reference
1	Checking the BF shift belt	The BF shift belt is not assembled properly.	If the BF shift belt is not operated manually, repair the part that restricts the operation.	
2	Checking the BF shift belt drive parts	The BF shift belt drive parts are not properly attached, or they are faulty.	Reattach the BF shift belt drive parts. If the belt comes off, reattach it. If not repaired, replace the BF shift belt drive parts.	
3	Checking the connection	The connector is not connected properly, or the wire is faulty.	Clean the terminal of the following wire connectors and reconnect the connectors. If there is no continuity, replace the wire. • BF adjusting motor 1, 2 - BF PWB • BF adjusting sensor 1, 2 - BF PWB	
4	Replacing BF adjustment motors 1, 2	BF adjustment motors 1, 2 are faulty.	Execute U240 [Booklet] > [Bundle Down] or [Bundle Up]. If BF adjusting motor 1, 2 does not operate properly, replace it.	
5	Checking BF adjustment sensors 1, 2	BF adjustment sensors 1, 2 are not properly attached, or they are faulty.	Execute U241 [Booklet] > [Bundle Down HP] or [Bundle Up HP]. If BF adjusting sensor 1 or 2 does not operate properly, reattach it and reconnect the connector. If not repaired, replace the sensor.	
6	Replacing the BF PWB	The BF PWB is faulty.	Replace the BF PWB.	

C8330: BF blade error

At the time of initial operation, the home position cannot be detected even after 3sec have passed. (4,000 sheets finisher / 100-sheet staple finisher + folding unit)

Step	Check description	Assumed cause	Measures	Reference
1	Checking the BF blade	The BF blade is not assembled properly.	If the BF blade does not operation manually, repair the position where restricts the operation.	
2	Checking the BF blade drive parts	The BF blade drive parts are not properly attached, or they are faulty.	Reattach the BF blade drive parts. If not repaired, replace them.	
3	Checking the connection	The connector is not connected properly, or the wire is faulty.	Clean the terminal of the following wire connectors and reconnect the connectors. If there is no continuity, replace the wire. • BF blade motor - BF PWB • BF blade sensor - BF PWB	
4	Replacing the BF blade motor	The BF blade motor is faulty.	Execute U240 [Booklet] > [Blade]. If the BF blade motor does not operate properly, replace it.	
5	Checking the BF blade sensor	The BF blade sensor is not properly attached, or it is faulty.	Execute U241 [Booklet] > [Blade HP]. If the BF blade sensor does not operate properly, reattach it and reconnect the connector. If not repaired, replace it.	
6	Replacing the BF PWB	The BF PWB is faulty.	Replace the BF PWB.	

C8340: BF staple motor error

J7600 (BF staple JAM) was detected twice in a row. (Second JAM detection condition: After starting the BF staple motor, the home position of the BF staple cannot be detected.) (4,000 sheets finisher / 100-sheet staple finisher + folding unit)

Step	Check description	Assumed cause	Measures	Reference
1	Checking the BF staple unit	The BF staple unit is not assembled properly.	If the BF staple unit does not operation manually, repair the position where restricts the operation.	
2	Checking the BF staple unit drive parts	The BF staple unit drive parts are not properly attached, or they are faulty.	Reattach the BF staple unit drive parts. If not repaired, replace them.	
3	Checking the connection	The connector is not connected properly, or the wire is faulty.	Clean the terminal of the following wire connectors and reconnect the connectors. If there is no continuity, replace the wire. • BF staple unit - DF PWB	
4	Replacing the BF staple unit	The BF staple motor is faulty.	Execute U240 [Booklet] > [Staple]. If the BF staple motor does not operate properly, replace the BF staple unit.	
5	Replacing the BF PWB	The BF PWB is faulty.	Replace the BF PWB.	

C8350: BF side registration motor 1 error

At the time of initial operation, the home position cannot be detected even after 1sec has passed. (4,000 sheets finisher / 100-sheet staple finisher + folding unit)

Step	Check description	Assumed cause	Measures	Reference
1	Checking the lower BF side registration guide	The lower BF side registration guide is not assembled properly.	If the BF side registration lower guide does not operation manually, repair the position where restricts the operation.	
2	Checking the lower BF side registration guide drive parts	The BF side registration lower guide drive parts are not properly attached, or they are faulty.	Reattach the BF side registration lower guide drive parts. If not repaired, replace them.	
3	Checking the connection	The connector is not connected properly, or the wire is faulty.	Clean the terminal of the following wire connectors and reconnect the connectors. If there is no continuity, replace the wire. • BF side registration motor 1 - BF PWB • BF side registration sensor 1 - BF PWB	
4	Replacing BF side registration motor 1	BF side registration motor 1 is faulty.	Execute U240 [Booklet]> [Width Test (A3)] or [Width Test (LD)]. If it does not operate properly, replace the BF width adjustment motor 1.	
5	Checking BF side registration sensor 1	BF side registration sensor 1 is not properly attached, or it is faulty.	Execute U241 [Booklet] > [Width Down HP]. If the BF width adjustment sensor 1 does not work properly, reinstall it and reconnect the connector. If it is not repaired, replace it.	
6	Replacing the BF PWB	The BF PWB is faulty.	Replace the BF PWB.	

C8360: BF main motor error

A lock signal was detected for a predetermined time or longer while the motor was operating. (4,000 sheets finisher / 100-sheet staple finisher + folding unit)

Step	Check description	Assumed cause	Measures	Reference
1	Checking the BF conveying roller	The BF conveying roller is not assembled properly.	If the BF conveying roller is not rotated manually, repair the part that restricts the operation.	
2	Checking the BF conveying roller drive parts	The BF conveying roller drive parts are not properly attached, or they are faulty.	Reattach the BF conveying roller drive parts. If not repaired, replace them.	
3	Checking the connection	The connector is not connected properly, or the wire is faulty.	Clean the terminal of the following wire connectors and reconnect the connectors. If there is no continuity, replace the wire. • BF main motor - BF PWB	
4	Replacing the BF main motor	The BF main motor is faulty.	Execute U240 [Booklet] > [Folding]. If the BF main motor does not operate properly, replace it.	
5	Replacing the BF PWB	The BF PWB is faulty.	Replace the BF PWB.	

C8370: BF staple motor error 2

J7600 (BF staple JAM) was detected twice in a row. (Second JAM detection condition: BF staple motor lock was detected while the motor was operating.) (4,000 sheets finisher / 100-sheet staple finisher + folding unit)

Step	Check description	Assumed cause	Measures	Reference
1	Checking the BF staple unit	The BF staple unit is not assembled properly.	If the BF staple unit does not operation manually, repair the position where restricts the operation.	
2	Checking the BF staple unit drive parts	The BF staple unit drive parts are not properly attached, or they are faulty.	Reattach the BF staple unit drive parts. If not repaired, replace them.	
3	Checking the connection	The connector is not connected properly, or the wire is faulty.	Clean the terminal of the following wire connectors and reconnect the connectors. If there is no continuity, replace the wire. • BF staple unit - DF PWB	
4	Replacing the BF staple unit	The BF staple motor is faulty.	Execute U240 [Booklet]> [Staple]. If it does not work properly, replace the BF staple unit.	
5	Replacing the BF PWB	The BF PWB is faulty.	Replace the BF PWB.	

C8380: BF exit pressure release motor error

BF eject pressure release The operation is not completed even after 3sec have passed since the motor was started. (100-sheet staple finisher + folding unit)

Step	Check description	Assumed cause	Measures	Reference
1	Checking the connection	The connector is not connected properly, or the wire is faulty.	Clean the terminal of the following wire connectors and reconnect the connectors. If there is no continuity, replace the wire.] • BF exit pressure release motor - BF PWB • BF exit pressure release sensor - BF PWB	
2	Replacing the BF exit pressure release motor	The BF exit pressure release motor is faulty.	Execute U240 [Booklet]> [EjectPressUnlock]. If it does not operate properly, replace the BF exhaust pressure release motor.	
3	Replacing the BF exit pressure release sensor	The BF exit pressure release sensor is faulty.	Execute U241 [Booklet]> [Eject Press HP]. If it does not operate properly, replace the BF exhaust pressure release sensor.	
4	Replacing the BF PWB	The BF PWB is faulty.	Replace the BF PWB.	

C8390: BF paddle motor error

The operation is not completed even after 0.5sec have passed since the BF paddle motor was started. (100-sheet staple finisher + folding unit)

Step	Check description	Assumed cause	Measures	Reference
1	Checking the connection	The connector is not connected properly, or the wire is faulty.	Clean the terminal of the following wire connectors and reconnect the connectors. If there is no continuity, replace the wire. • BF paddle motor - BF PWB • BF paddle sensor - BF PWB	
2	Replacing the BF paddle motor	The BF paddle motor is faulty.	Execute U240 [Booklet]> [Paddle]. If it does not work properly, replace the BF paddle motor.	
3	Replacing the BF paddle sensor	The BF paddle sensor is faulty.	Execute U241 [Booklet]> [Paddle HP]. If it does not work properly, replace the BF paddle sensor.	
4	Replacing the BF PWB	The BF PWB is faulty.	Replace the BF PWB.	

C8400: BF transport tray motor error

A lock signal was detected for 0.1sec after a predetermined time had elapsed from the start of driving the BF transport tray motor. (100-sheet staple finisher + folding unit)

Step	Check description	Assumed cause	Measures	Reference
1	Checking the connection	The connector is not connected properly, or the wire is faulty.	Clean the terminal of the following wire connectors and reconnect the connectors. If there is no continuity, replace the wire. • BF conveying tray motor - BF PWB	
2	Replacing the BF conveying tray motor	The BF conveying tray motor is faulty.	Execute U240 [Booklet]> [Feed Tray]. If it does not work properly, replace the BF Conveyance Tray Motor.	
3	Replacing the BF PWB	The BF PWB is faulty.	Replace the BF PWB.	

C8410: PH slide motor error 1

When moving the home position, the PH slide sensor does not turn on even if it moves 30 mm. (4,000 sheets finisher/ 1,000 sheets finisher + punch unit)

Step	Check description	Assumed cause	Measures	Reference
1	Checking the punch unit	The punch unit is not assembled properly.	If the punch slide section does not move front and back manually, repair the position where restricts the operation.	
2	Checking the PH drive parts	The PH drive parts are not attached properly, or faulty.	Reattach the PH drive parts. If not repaired, replace them.	
3	Checking the connection	The connector is not connected properly, or the wire is faulty.	Clean the terminal of the following wire connectors and reconnect the connectors. If there is no continuity, replace the wire. • PH slide motor - PH PWB • PH slide sensor - PH PWB • PH PWB - DF PWB	
4	Replacing the PH slide motor	The PH slide motor is faulty.	Execute U240 [Motor] > [Punch Move]. If the PH slide motor does not operate properly, replace it.	
5	Checking the PH slide sensor	The PH slide sensor is not properly attached, or it is faulty.	Reseat the PH slide sensor and reconnect the connector. If it is not repaired, replace it.	
6	Replacing the PH PWB	The PH PWB is faulty.	Replace the PH PWB.	
7	Replacing the DF PWB	The DF PWB is faulty.	Replace the DF PWB.	

C8420: PH slide motor error 2

When the paper edge detection operation is performed, the PH paper edge sensors 1 and 2 cannot detect the paper edge even if the paper edge is moved by 30 mm. (4,000 sheets finisher/1,000 sheets finisher + punch unit)

Step	Check description	Assumed cause	Measures	Reference
1	Checking the punch unit	The punch unit is not assembled properly.	If the punch slide section does not move front and back manually, repair the position where restricts the operation.	
2	Checking the PH drive parts	The PH drive parts are not attached properly, or faulty.	Reattach the PH drive parts. If not repaired, replace them.	
3	Checking the connection	The connector is not connected properly, or the wire is faulty.	Clean the terminal of the following wire connectors and reconnect the connectors. If there is no continuity, replace the wire. • PH slide motor - PH PWB • PH paper edge sensor 1, 2 - PH PWB • PH PWB - DF PWB	
4	Replacing the PH slide motor	The PH slide motor is faulty.	Execute U240 [Motor] > [Punch Move]. If the PH slide motor does not operate properly, replace it.	
5	Checking the PH paper edge sensor 1, 2	The PH paper edge sensor 1, 2 is not attached properly, or it is faulty.	Execute U241 [Punch]> [Edge Face1] or [Edge Face2]. If it does not work properly, reattach the PH paper edge sensors 1 and 2. If it is not repaired, replace it.	
6	Replacing the PH PWB	The PH PWB is faulty.	Replace the PH PWB.	
7	Replacing the DF PWB	The DF PWB is faulty.	Replace the DF PWB.	

C8430: PH main program error/punch unit communication error

- When the power was turned on, there was an error in the main program of the punch unit.
- A communication error occurred 10 times in a row after the firmware version was read from the punch unit. (Excluding 100-sheet staple finisher)

Step	Check description	Assumed cause	Measures	Reference
1	Checking the connection	The connector is not connected properly, or the wire is faulty.	Clean the terminal of the following wire connectors and reconnect the connectors. If there is no continuity, replace the wire. • PH PWB - DF PWB	
2	Replacing the PH PWB	The PH PWB is faulty.	Replace the PH PWB.	
3	Replacing the DF PWB	The DF PWB is faulty.	Replace the DF PWB.	

C8500: MT main program error/mailbox communication error

- When the power was turned on, there was something wrong with the main program of the mailbox.
- A communication error occurred 10 times in a row after the firmware version was read from the mailbox. (4,000 sheets finisher + mailbox)

Step	Check description	Assumed cause	Measures	Reference
1	Resetting the power	The PWB malfunctions.	Turn off the power switch and pull out the power plug. After passing 5s, reinsert the power plug and turn on the power switch.	
2	Checking the connection	The connector is not connected properly, or the wire is faulty.	Clean the terminal of the following wire connectors and reconnect the connectors. If there is no continuity, replace the wire. • MT PWB - DF PWB	
3	Replacing the MT PWB	The MT PWB is faulty.	Replace the MT PWB.	
4	Replacing the DF PWB	The DF PWB is faulty.	Replace the DF PWB.	

C8510: MB conveying motor error 1

During initial operation, the MT home position sensor is not detected to be ON even after a predetermined time has passed. (4,000 sheets finisher + mailbox)

Step	Check description	Assumed cause	Measures	Reference
1	Checking the MT conveying roller	The MT conveying roller is not assembled properly.	If the MT conveying roller is not rotated manually, repair the part that restricts the operation.	
2	Checking the connection	The connector is not connected properly, or the wire is faulty.	Clean the terminal of the following wire connectors and reconnect the connectors. If there is no continuity, replace the wire. • MT conveying motor - MT PWB • MT home position sensor - MT PWB	
3	Replacing the MT conveying motor	The MT conveying motor is faulty.	Execute U240 [Mail Box] > [Conv]. If the MT conveying motor does not operate properly, replace it.	
4	Checking the MT home position sensor	The MT home position is not properly attached, or it is faulty.	Execute U241 [Mail Box] > [Motor HP]. If the MT home position sensor does not operate properly, reattach it and reconnect the connector. If not repaired, replace it.	
5	Replacing the MT PWB	The MT PWB is faulty.	Replace the MT PWB.	

C8520: MB conveying motor error 2

During standby operation, the MT home position sensor is not detected as OFF even after a specified time has passed. (4,000 sheets finisher + mailbox)

Step	Check description	Assumed cause	Measures	Reference
1	Checking the MT conveying roller	The MT conveying roller is not assembled properly.	If the MT conveying roller is not rotated manually, repair the part that restricts the operation.	
2	Checking the MT conveying roller drive parts	The MT conveying roller drive parts are not properly attached, or they are faulty.	Reattach the MT conveying roller drive parts. If not repaired, replace them.	
3	Checking the connection	The connector is not connected properly, or the wire is faulty.	Clean the terminal of the following wire connectors and reconnect the connectors. If there is no continuity, replace the wire. • MT conveying motor - MT PWB • MT home position sensor - MT PWB	
4	Replacing the MT conveying motor	The MT conveying motor is faulty.	Execute U240 [Mail Box] > [Conv]. If the MT conveying motor does not operate properly, replace it.	
5	Checking the MT home position sensor	The MT home position is not properly attached, or it is faulty.	Execute U241 [Mail Box] > [Motor HP]. If the MT home position sensor does not operate properly, reattach it and reconnect the connector. If not repaired, replace it.	
6	Replacing the MT PWB	The MT PWB is faulty.	Replace the MT PWB.	

C8600: DF adjusting release motor error

Even if the DF adjustment release motor is driven in the HP direction for 3sec, the change in the DF adjustment release HP sensor is not detected. (1st time is JAM) (100-sheet staple finisher)

Step	Check description	Assumed cause	Measures	Reference
1	Checking the connection	The connector is not connected properly, or the wire is faulty.	Clean the terminal of the following wire connectors and reconnect the connectors. If there is no continuity, replace the wire. • DF adjusting release motor - DF PWB • DF adjusting release HP motor - DF PWB	
2	Replacing the DF adjusting release motor	The DF adjusting release motor is faulty.	Execute U240 [Motor]> [Match Pressure]. If it does not work properly, replace the DF adjustment release motor.	
3	Checking the DF adjusting release HP sensor	The DF adjusting release HP sensor is faulty.	Execute U241 [Finisher] > [Match Coro HP]. If the DF adjustment release HP sensor does not work properly, reinstall it and reconnect the connector. If it is not repaired, replace it.	
4	Replacing the DF PWB	The DF PWB is faulty.	Replace the DF PWB.	

C8610: DF withdraw release motor error

Even if the DF pull-in guide release motor is driven in the HP direction for 3sec, the change in the DF pull-in guide release HP sensor is not detected. (1st time is JAM) (100-sheet staple finisher)

Step	Check description	Assumed cause	Measures	Reference
1	Checking the connection	The connector is not connected properly, or the wire is faulty.	Clean the following connector terminal of the wire and reinsert them. If there is no continuity, replace the wire. • DF pull-in guide release motor - DF PWB • DF pull-in guide release HP sensor - DF substrate	
2	Replacing the DF retract guide release motor	The DF pull-in guide release motor is faulty.	Execute U240 [Motor]> [Beat]. If it does not work properly, replace the DF pull-in guide release motor.	
3	DF pull-in guide release Check HP sensor	The DF pull-in guide release HP sensor is faulty.	Execute U241 [Finisher] > [Rear Beat HP]. If the DF pull-in guide release HP sensor does not work properly, reinstall it and reconnect the connector. If it is not repaired, replace it.	
4	Replacing the DF PWB	The DF PWB is faulty.	Replace the DF PWB.	

C8620: DF withdraw pulley pressure release motor error

Even if the DF pull-in roller pressure release motor is driven in the HP direction for 3sec, the change in the DF pull-in roller pressure release sensor is not detected. (1st time is JAM) (100-sheet staple finisher)

Step	Check description	Assumed cause	Measures	Reference
1	Checking the connection	The connector is not connected properly, or the wire is faulty.	Clean the terminal of the following wire connectors and reconnect the connectors. If there is no continuity, replace the wire. • DF withdraw pulley pressure release motor - DF PWB • DF withdraw pulley pressure release sensor - DF PWB	
2	Replacing the DF withdraw pulley pressure release motor	The DF withdraw pulley pressure release motor is faulty.	Execute U240 [Motor]> [Pull Pressure]. If it does not operate properly, replace the DF pull-in roller pressure release motor.	
3	Checking the DF withdraw pulley pressure release sensor	The DF withdraw pulley pressure release motor is faulty.	Execute U241 [Finisher]> [Pull Coro HP]. If the DF pull-in roller pressure release sensor does not work properly, reinstall it and reconnect the connector. If it is not repaired, replace it.	
4	Replacing the DF PWB	The DF PWB is faulty.	Replace the DF PWB.	

C8630: DF exit release motor error

Even if the DF eject release motor is driven in the HP direction for 3sec, the change in the DF eject pressure release HP sensor is not detected. (1st time is JAM) (100-sheet staple finisher)

Step	Check description	Assumed cause	Measures	Reference
1	Checking the connection	The connector is not connected properly, or the wire is faulty.	Clean the terminal of the following wire connectors and reconnect the connectors. If there is no continuity, replace the wire. • DF exit release motor - DF PWB • DF exit pressure release HP sensor - DF PWB	
2	Replacing the DF exit release motor	The DF exit release motor is faulty.	Execute U240 [Motor]> [Eject Unlock]. If it does not operate properly, replace the DF eject release motor.	
3	Checking the DF exit pressure release HP sensor	The DF eject pressure release HP sensor is faulty.	Execute U241 [Finisher] > [Eject Press HP]. If the DF exhaust pressure release HP sensor does not work properly, reinstall it and reconnect the connector. If it is not repaired, replace it.	
4	Replacing the DF PWB	The DF PWB is faulty.	Replace the DF PWB.	

C8640: DF side registration motor 1 error

Even if the DF width adjustment motor 1 is driven in the HP direction for 3sec, the change in the DF width adjustment sensor 1 is not detected. (1st time is JAM) (100-sheet staple finisher)

Step	Check description	Assumed cause	Measures	Reference
1	Checking the connection	The connector is not connected properly, or the wire is faulty.	Clean the terminal of the following wire connectors and reconnect the connectors. If there is no continuity, replace the wire. • DF side registration motor 1 - DF PWB • DF side registration sensor 1 - DF PWB	
2	Replacing DF side registration motor 1	DF side registration motor 1 is faulty.	Execute U240 [Motor]> [Width Test (A3)] or [Width Test (LD)]. If it does not work properly, replace the DF width adjustment motor 1.	
3	Checking DF side registration sensor 1	The DF width adjustment sensor 1 is faulty.	Execute U241 [Finisher] > [Width Front HP]. If DF side registration sensor 1 does not operate properly, reattach it and reconnect the connector. If not repaired, replace the motor.	
4	Replacing the DF PWB	The DF PWB is faulty.	Replace the DF PWB.	

C8650: DF side registration motor 2 error

Even if the DF width adjustment motor 2 is driven in the HP direction for 3sec, the change in the DF width adjustment sensor 2 is not detected. (1st time is JAM) (100-sheet staple finisher)

Step	Check description	Assumed cause	Measures	Reference
1	Checking the connection	The connector is not connected properly, or the wire is faulty.	Clean the terminal of the following wire connectors and reconnect the connectors. If there is no continuity, replace the wire. • DF side registration motor 2 - DF PWB • DF side registration sensor 2 - DF PWB	
2	Replacing DF side registration motor 2	DF side registration motor 2 is faulty.	Execute U240 [Motor]> [Width Test (A3)] or [Width Test (LD)]. If it does not work properly, replace the DF width adjustment motor 2.	
3	Checking DF side registration sensor 2	The DF width adjustment sensor 2 is faulty.	Execute U241 [Finisher] > [Width Trail HP]. If DF side registration sensor 2 does not operate properly, reattach it and reconnect the connector. If not repaired, replace the motor.	
4	Replacing the DF PWB	The DF PWB is faulty.	Replace the DF PWB.	

C8700: DF bundle exit motor 1 error

Even if the DF bundle eject motor 1 is driven in the HP direction for 3sec, the change in the DF bundle eject HP sensor 1 is not detected. (1st time is JAM) (100-sheet staple finisher)

Step	Check description	Assumed cause	Measures	Reference
1	Checking the connection	The connector is not connected properly, or the wire is faulty.	Clean the terminal of the following wire connectors and reconnect the connectors. If there is no continuity, replace the wire. • DF bundle exit motor 1 - DF PWB • DF bundle exit sensor 1 - DF PWB	
2	Replacing DF bundle exit motor 1	DF bundle exit motor 1 is faulty.	Execute U240 [Motor]> [Bundle Up]. If it does not work properly, replace the DF bundle eject motor 1.	
3	Checking DF bundle exit sensor 1	The DF bundle eject HP sensor 1 is faulty.	Execute U241 [Finisher]> [Bundle Eject HP1]. If the DF bundle eject sensor 1 does not work properly, reinstall it and reconnect the connector. If it is not repaired, replace it.	
4	Replacing the DF PWB	The DF PWB is faulty.	Replace the DF PWB.	

C8710: DF bundle exit motor 2 error

Even if the DF bundle eject motor 2 is driven in the HP direction for 3sec, the change in the DF bundle eject HP sensor 2 is not detected. (1st time is JAM) (100-sheet staple finisher)

Step	Check description	Assumed cause	Measures	Reference
1	Checking the connection	The connector is not connected properly, or the wire is faulty.	Clean the terminal of the following wire connectors and reconnect the connectors. If there is no continuity, replace the wire. • DF bundle exit motor 2 - DF PWB • DF bundle exit sensor 2 - DF PWB	
2	Replacing DF bundle exit motor 2	DF bundle exit motor 2 is faulty.	Execute U240 [Motor]> [Bundle Up]. If it does not work properly, replace the DF bundle eject motor 2.	
3	Checking DF bundle exit motor 2	The DF bundle eject HP sensor 2 is faulty.	Execute U241 [Finisher]> [Bundle Eject HP2]. If the DF bundle eject sensor 2 does not operate properly, reinstall it and reconnect the connector. If it is not repaired, replace it.	
4	Replacing the DF PWB	The DF PWB is faulty.	Replace the DF PWB.	

C8720: DF exit paddle motor error

Even if the DF eject paddle motor is driven in the HP direction for 3sec, the change in the DF eject paddle HP sensor is not detected. (1st time is JAM) (100-sheet staple finisher)

Step	Check description	Assumed cause	Measures	Reference
1	Checking the connection	The connector is not connected properly, or the wire is faulty.	Clean the terminal of the following wire connectors and reconnect the connectors. If there is no continuity, replace the wire. • DF exit paddle motor - DF PWB • DF exit paddle HP sensor - DF PWB	
2	Replacing the DF exit paddle motor	The DF exit paddle motor is faulty.	Execute U240 [Motor]> [Tray Eject Paddle]. If it does not work properly, replace the DF eject paddle motor.	
3	Checking the DF exit paddle HP sensor	The DF eject paddle HP sensor is faulty.	Execute U241 [Finisher]> [Eject Paddle HP]. If it does not work properly, replace the DF eject paddle HP sensor.	
4	Replacing the DF PWB	The DF PWB is faulty.	Replace the DF PWB.	

C8730: DF exit paper press motor error

Even if the DF eject paper retainer motor is driven in the HP detection direction for 3sec, the change in the DF eject paper retainer sensor is not detected. (1st time is JAM) (100-sheet staple finisher)

Step	Check description	Assumed cause	Measures	Reference
1	Checking the connection	The connector is not connected properly, or the wire is faulty.	Clean the terminal of the following wire connectors and reconnect the connectors. If there is no continuity, replace the wire. • DF exit paper press motor - DF PWB • DF exit paper press sensor - DF PWB	
2	Replacing the DF exit paper press motor	The DF exit paper press motor is faulty.	Execute U240 [Motor]> [Press Paper]. If it does not operate properly, replace the DF eject paper retainer motor.	
3	Checking the DF exit paper press sensor	The DF eject paper holding sensor is faulty.	Execute U241 [Finisher]> [Press Paper HP]. If it does not work properly, replace the DF eject paper retainer sensor.	
4	Replacing the DF PWB	The DF PWB is faulty.	Replace the DF PWB.	

C8740: DF exit support guide motor error

Even if the DF eject support guide motor is driven in the HP direction for 3sec, the change in the DF eject support guide HP sensor is not detected. (1st time is JAM) (100-sheet staple finisher)

Step	Check description	Assumed cause	Measures	Reference
1	Checking the connection	The connector is not connected properly, or the wire is faulty.	Clean the terminal of the following wire connectors and reconnect the connectors. If there is no continuity, replace the wire. • DF exit support guide motor - DF PWB • DF exit support guide HP sensor - DF PWB	
2	Replacing the DF exit support guide motor	The DF exit support guide motor is faulty.	Execute U240 [Motor]> [Eject Guide]. If it does not work properly, replace the DF eject support guide motor.	
3	Checking the DF exit support guide HP sensor	DF eject support guide HP sensor is faulty.	Execute U241 [Finisher]> [Paper Guide HP]. If it does not work properly, replace the DF eject support guide HP sensor.	
4	Replacing the DF PWB	The DF PWB is faulty.	Replace the DF PWB.	

C8800: DF main program error/communication error between engine and DF

- There was something wrong with the main program when the power was turned on.
- Engine-DF communication error was detected 10 times in a row.
- The finisher does not notify the ready signal within 6sec after the start of communication.
- Installed an unsupported finisher.

Step	Check description	Assumed cause	Measures	Reference
1	Resetting the power	The program does not start up properly.	Turn off the power switch and pull out the power plug. After passing 5s, reinsert the power plug and turn on the power switch.	
2	Firmware upgrade	The firmware is not the latest version.	Please upgrade the engine firmware and DF firmware to the latest version.	
3	Reinstalling the finisher	The finisher is not installed properly in the main unit. Or, the drawer connector pins between the finisher and the main unit are deformed or damaged.	Reinstall the finisher in the main unit. At that time, as for the inner finisher, confirm the finisher is completely inserted all the way into the main unit and then it is fixed with the screw. If the issue is not resolved after that, check the drawer connector pins and if deformed or damaged, replace the drawer connector.	
4	Checking the connection	The connector is not connected properly, or the wire is faulty.	Clean the following connector terminal of the wire and reinsert them. If there is no continuity, replace the wire. • DF PWB - Image drive PWB • Image drive PWB - Engine PWB	
5	Replacing the DF PWB	The DF PWB is faulty.	Replace the DF PWB.	
6	Replacing the image drive PWB	The image drive PWB is faulty.	Replacing the image drive PWB	
7	Replacing the engine PWB	The engine PWB is faulty.	Replace the engine PWB.	

C8810: DF - Sub CPU communication error

Communication error with sub CPU occurred 3 times in a row. (100-sheet staple finisher)

Step	Check description	Assumed cause	Measures	Reference
1	Firmware upgrade	The firmware is not the latest version.	Upgrade the DF firmware to the latest version.	
2	Replacing the DF PWB	The DF PWB is faulty.	Replace the DF PWB.	

C8B00: Inserter EEPROM error

At the time of writing, the written data and the scanning data do not match three times in a row. (Insert)

Step	Check description	Assumed cause	Measures	Reference
1	Checking the EEPROM	The EEPROM is not properly installed.	Reseat the EEPROM on the IS PWB.	
2	IS PWB replacement	The IS PWB is faulty.	Replace the IS PWB.	
3	Replacing the EEPROM	The EEPROM is faulty.	Replace the EEPROM on the IS PWB.	

C8B10: IS upper tray lift motor ascending error

When the IS upper tray lift motor was raised, it was detected 5 times or more that the IS upper tray pickup sensor did not turn on even after a predetermined time had passed. (3 retries) (Inserter)

Step	Check description	Assumed cause	Measures	Reference
1	Checking the upper tray lift plate	The upper tray lift plate is not installed properly. Or, the lift gear on the machine rear side of the upper tray lift plate is broken.	If the upper tray lift plate does not move up and down manually, correct the catch. If it is damaged, replace the lift gear.	
2	Checking the connection	The connector is not connected properly, or the wire is faulty.	Clean the following connector terminal of the wire and reinsert them. If there is no continuity, replace the wire. • IS tray lift motor - IS PWB • IS tray pickup sensor - IS PWB	
3	Replacing the IS upper tray lift motor	The IS upper tray lift motor is faulty.	Execute U240 [Inserter]> [Upper Tray Lift]. If it does not work properly, replace the tray lift motor on the IS.	
4	Checking the IS upper tray pickup sensor	The IS upper tray pickup sensor is not installed properly, or it is faulty.	Reinstall the tray pickup sensor on the IS and execute U241 [Inserter]> [Upper Tray Lift U]. If it does not work properly, replace the tray pickup sensor on the IS.	
5	IS PWB replacement	The IS PWB is faulty.	Replace the IS PWB.	

C8B20: IS upper tray lift motor descending error

When the IS upper tray lift motor is lowered, the IS upper tray lower limit sensor does not turn on even after a predetermined time has passed. (3 retries) (Inserter)

Step	Check description	Assumed cause	Measures	Reference
1	Checking the upper tray lift plate	The upper tray lift plate is not installed properly. Or, the lift gear on the machine rear side of the upper tray lift plate is broken.	If the upper tray lift plate does not move up and down manually, correct the catch. If it is damaged, replace the lift gear.	
2	Checking the connection	The connector is not connected properly, or the wire is faulty.	Clean the following connector terminal of the wire and reinsert them. If there is no continuity, replace the wire. • IS upper tray lift motor - IS PWB • IS upper tray lower limit sensor - IS PWB	
3	Replacing the IS upper tray lift motor	The IS upper tray lift motor is faulty.	Execute U240 [Inserter]> [Upper Tray Lift]. If it does not work properly, replace the tray lift motor on the IS.	
4	Checking the IS upper tray lower limit sensor	The IS upper tray lower limit sensor is not installed properly or it is faulty.	Reinstall the IS upper tray lower limit sensor and execute U241 [Inserter]> [Upper Tray Lift L]. If it does not work properly, replace the IS upper tray lower limit sensor.	
5	IS PWB replacement	The IS PWB is faulty.	Replace the IS PWB.	

C8B30: IS lower tray lift motor ascending error

When the IS lower tray lift motor was raised, it was detected 5 times or more that the IS lower tray pickup sensor did not turn on even after a predetermined time had passed. (3 retries) (Inserter)

Step	Check description	Assumed cause	Measures	Reference
1	Checking the lower tray lift plate	The lower tray lift plate is not installed properly. Or, the lift gear on the rear side of the lower tray lift plate machine is broken.	If the lower tray lift plate does not move up and down manually, correct the catch. If it is damaged, replace the lift gear.	
2	Checking the connection	The connector is not connected properly, or the wire is faulty.	Clean and reinsert the terminals of the electric wire connector below. If there is no continuity, replace the wire. • IS lower tray lift motor - IS PWB • IS lower tray pickup sensor - IS PWB	
3	Replacing the IS lower tray lift motor	The IS lower tray lift motor is faulty.	Execute U240 [Inserter]> [Lower Tray Lift]. If it does not work properly, replace the tray lift motor under IS.	
4	Checking the IS lower tray pickup sensor	The IS lower tray pickup sensor is not installed properly or it is faulty.	Reinstall the IS lower tray pickup sensor and execute U241 [Inserter]> [Lower Tray Lift U]. If it does not work properly, replace the IS lower tray pickup sensor.	
5	IS PWB replacement	The IS PWB is faulty.	Replace the IS PWB.	

C8B40: IS lower tray lift motor descending error

When the IS lower tray lift motor is lowered, the IS lower tray lower limit sensor does not turn on even after a specified time has passed. (3 retries) (Inserter)

Step	Check description	Assumed cause	Measures	Reference
1	Checking the lower tray lift plate	The lower tray lift plate is not installed properly. Or, the lift gear on the rear side of the lower tray lift plate machine is broken.	If the lower tray lift plate does not move up and down manually, correct the catch. If it is damaged, replace the lift gear.	
2	Checking the connection	The connector is not connected properly, or the wire is faulty.	Clean the following connector terminal of the wire and reinsert them. If there is no continuity, replace the wire. • IS lower tray lift motor - IS PWB • IS lower tray lower limit sensor - IS PWB	
3	Replacing the IS lower tray lift motor	The IS lower tray lift motor is faulty.	Execute U240 [Inserter]> [Lower Tray Lift]. If it does not work properly, replace the tray lift motor under IS.	
4	Checking the IS lower tray lower limit sensor	The IS lower tray lower limit sensor is not installed properly or it is faulty.	Reinstall the IS lower tray lower limit sensor and execute U241 [Inserter]> [Lower Tray Lift L]. If it does not work properly, replace the IS lower tray lower limit sensor.	
5	IS PWB replacement	The IS PWB is faulty.	Replace the IS PWB.	

C8B80: IS main program error/communication error between the main unit and IS

- There was something wrong with the main program when the power was turned on.
- The communication error is not cleared even after 10sec have passed since the communication error was detected during the initial connection. (Inserter)

Step	Check description	Assumed cause	Measures	Reference
1	Resetting the power	The program does not start up properly.	Turn off the power switch and pull out the power plug. After passing 5s, reinsert the power plug and turn on the power switch.	
2	Firmware upgrade	The firmware is not the latest version.	Upgrade the firmware to the latest version.	
3	Checking the connection	The connector is not connected properly, or the wire is faulty.	Clean the following connector terminal of the wire and reinsert them. If there is no continuity, replace the wire. • IS PWB - Engine PWB	
4	IS PWB replacement	The IS PWB is faulty.	Replace the IS PWB.	
5	Replacing the engine PWB	The engine PWB is faulty.	Replace the engine PWB.	

C8E00: Communication error between ZF and DF

A communication error was detected between ZF and DF. (Z fold unit)

Step	Check description	Assumed cause	Measures	Reference
1	Resetting the power	The program does not start up properly.	Turn off the power switch and pull out the power plug. After passing 5s, reinsert the power plug and turn on the power switch.	
2	Checking the connection	The connector is not connected properly, or the wire is faulty.	Clean the following connector terminal of the wire and reinsert them. If there is no continuity, replace the wire. • DF PWB - IF connector - ZF PWB	
3	Replacing the DF PWB	The DF PWB is faulty.	Replace the DF PWB.	
4	ZF PWB replacement	There is something wrong with the ZF PWB.	Replace the ZF PWB.	

C8E10: Protective element cutoff error

An error in the 24V power supply line was detected. (Z fold unit)

Step	Check description	Assumed cause	Measures	Reference
1	Resetting the power	The program does not start up properly.	Turn off the power switch and pull out the power plug. After passing 5s, reinsert the power plug and turn on the power switch.	
2	Checking the connection	The connector is not connected properly, or the wire is faulty.	Clean the following connector terminal of the wire and reinsert them. If there is no continuity, replace the wire. • ZF power supply PWB - ZF PWB	
3	Replacing the ZF power PWB	The ZF power supply PWB is faulty.	Replace the ZF power PWB.	
4	ZF PWB replacement	There is something wrong with the ZF PWB.	Replace the ZF PWB.	

C8E20: Inlet motor error

The inlet motor JAM was detected 5 times in a row. (Z fold unit)

Step	Check description	Assumed cause	Measures	Reference
1	Resetting the power	The program does not start up properly.	Turn off the power switch and pull out the power plug. After passing 5s, reinsert the power plug and turn on the power switch.	
2	Checking the connection	The connector is not connected properly, or the wire is faulty.	Clean the following connector terminal of the wire and reinsert them. If there is no continuity, replace the wire. Entrance motor-ZF PWB	
3	Checking the entrance motor	The inlet motor is not working properly.	Execute U240 [Z-Fold] > [Inlet]. If the inlet motor does not work properly, reinstall it and reconnect the connector. If it is not repaired, replace it.	
4	ZF PWB replacement	There is something wrong with the ZF PWB.	Replace the ZF PWB.	

C8E30: Regist front motor error

The regist front motor JAM was detected 5 times in a row. (Z fold unit)

Step	Check description	Assumed cause	Measures	Reference
1	Resetting the power	The program does not start up properly.	Turn off the power switch and pull out the power plug. After passing 5s, reinsert the power plug and turn on the power switch.	
2	Checking the connection	The connector is not connected properly, or the wire is faulty.	Clean the terminals of the wire connector below and reinsert them. If there is no continuity, replace the wire. • Regist front motor - ZF PWB	
3	Checking the regist front motor	The regist front motor is not working properly.	Execute U240 [Z-Fold] > [Regist Front]. If the regist front motor does not work properly, reinstall it and reconnect the connector. If it is not repaired, replace it.	
4	ZF PWB replacement	There is something wrong with the ZF PWB.	Replace the ZF PWB.	

C8E40: Resist motor error

The resist motor JAM was detected 5 times in a row. (Z fold unit)

Step	Check description	Assumed cause	Measures	Reference
1	Resetting the power	The program does not start up properly.	Turn off the power switch and pull out the power plug. After passing 5s, reinsert the power plug and turn on the power switch.	
2	Checking the connection	The connector is not connected properly, or the wire is faulty.	Clean the terminals of the wire connector below and reinsert them. If there is no continuity, replace the wire. • Regist motor - ZF PWB	
3	Checking the regist motor	The regist motor is not working properly.	Execute U240 [Z-Fold] > [Regist]. If the regist motor does not work properly, reinstall it and reconnect the connector. If it is not repaired, replace it.	
4	ZF PWB replacement	There is something wrong with the ZF PWB.	Replace the ZF PWB.	

C8E50: Folding eject tray motor error

The folding eject tray motor JAM was detected 5 times in a row. (Z fold unit)

Step	Check description	Assumed cause	Measures	Reference
1	Resetting the power	The program does not start up properly.	Turn off the power switch and pull out the power plug. After passing 5s, reinsert the power plug and turn on the power switch.	
2	Checking the connection	The connector is not connected properly, or the wire is faulty.	Clean the following connector terminal of the wire and reinsert them. If there is no continuity, replace the wire. • Folded eject tray motor - ZF PWB	
3	Checking the folding eject tray motor	The folding eject tray motor is not working properly.	Execute U240 [Z-Fold]> [Fold Eject Tray]. If the fold-out tray motor does not work properly, reinstall it and reconnect the connector. If it is not repaired, replace it.	
4	ZF PWB replacement	There is something wrong with the ZF PWB.	Replace the ZF PWB.	

C8E60: Paper stacking motor error

The paper stacking motor JAM was detected 5 times in a row. (Z fold unit)

Step	Check description	Assumed cause	Measures	Reference
1	Resetting the power	The program does not start up properly.	Turn off the power switch and pull out the power plug. After passing 5s, reinsert the power plug and turn on the power switch.	
2	Checking the connection	The connector is not connected properly, or the wire is faulty.	Clean the terminals of the wire connector below and reinsert them. If there is no continuity, replace the wire. • Paper stacking motor - ZF PWB	
3	Checking the paper stacking motor	The paper stacking motor is not working properly.	Execute U240 [Z-Fold] > [Paper Stack]. If the paper stacking motor does not work properly, reinstall it and reconnect the connector. If it is not repaired, replace it.	
4	ZF PWB replacement	There is something wrong with the ZF PWB.	Replace the ZF PWB.	

C8E70: Primary conveying motor error

The primary conveying motor JAM was detected 5 times in a row. (Z fold unit)

Step	Check description	Assumed cause	Measures	Reference
1	Resetting the power	The program does not start up properly.	Turn off the power switch and pull out the power plug. After passing 5s, reinsert the power plug and turn on the power switch.	
2	Checking the connection	The connector is not connected properly, or the wire is faulty.	Clean the terminals of the wire connector below and reinsert them. If there is no continuity, replace the wire. • Primary conveying motor - ZF PWB	
3	Checking the Primary conveying motor	The Primary conveying motor is not operating properly.	Execute U240 [Z-Fold] > [First conveying]. If the 1st conveying motor does not work properly, reinstall it and reconnect the connector. If it is not repaired, replace it.	
4	ZF PWB replacement	There is something wrong with the ZF PWB.	Replace the ZF PWB.	

C8E80:Secondary conveying motor error

The secondary conveying motor JAM was detected 5 times in a row. (Z fold unit)

Step	Check description	Assumed cause	Measures	Reference
1	Resetting the power	The program does not start up properly.	Turn off the power switch and pull out the power plug. After passing 5s, reinsert the power plug and turn on the power switch.	
2	Checking the connection	The connector is not connected properly, or the wire is faulty.	Clean the terminals of the wire connector below and reinsert them. If there is no continuity, replace the wire. • Secondary conveying motor - ZF PWB	
3	Checking the Secondary conveying motor	The secondary conveying motor is not operating properly.	Execute U240 [Z-Fold] > [Second conveying]. If the 2nd conveying motor does not work properly, reinstall it and reconnect the connector. If it is not repaired, replace it.	
4	ZF PWB replacement	There is something wrong with the ZF PWB.	Replace the ZF PWB.	

C8E90: Entrance feedshift claw motor error

The entrance feedshift claw motor JAM was detected 5 times in a row. (Z fold unit)

Step	Check description	Assumed cause	Measures	Reference
1	Resetting the power	The program does not start up properly.	Turn off the power switch and pull out the power plug. After passing 5s, reinsert the power plug and turn on the power switch.	
2	Checking the connection	The connector is not connected properly, or the wire is faulty.	Clean the following connector terminal of the wire and reinsert them. If there is no continuity, replace the wire. • Entrance feedshift claw motor - ZF PWB	
3	Checking the entrance feedshift claw motor	The entrance feedshift claw motor is not operating properly.	Execute U240 [Z-Fold] > [Inlet feedshift]. If the inlet feedshift claw motor does not work properly, reinstall it and reconnect the connector. If it is not repaired, replace it.	
4	ZF PWB replacement	There is something wrong with the ZF PWB.	Replace the ZF PWB.	

C8EA0: Eject feedshift claw motor error

The paper eject feedshift claw motor JAM was detected 5 times in a row. (Z fold unit)

Step	Check description	Assumed cause	Measures	Reference
1	Resetting the power	The program does not start up properly.	Turn off the power switch and pull out the power plug. After passing 5s, reinsert the power plug and turn on the power switch.	
2	Checking the connection	The connector is not connected properly, or the wire is faulty.	Clean the following connector terminal of the wire and reinsert them. If there is no continuity, replace the wire. • Paper eject feedshift claw motor - ZF PWB	
3	Checking the eject feedshift claw motor	The paper eject feedshift claw motor is not operating properly.	Execute U240 [Z-Fold] > [Eject feedshift]. If the eject feedshift claw motor does not work properly, reinstall it and reconnect the connector. If it is not repaired, replace it.	
4	ZF PWB replacement	There is something wrong with the ZF PWB.	Replace the ZF PWB.	

C8EB0: Folding feedshift claw motor error

The folding feedshift claw motor JAM was detected 5 times in a row. (Z fold unit)

Step	Check description	Assumed cause	Measures	Reference
1	Resetting the power	The program does not start up properly.	Turn off the power switch and pull out the power plug. After passing 5s, reinsert the power plug and turn on the power switch.	
2	Checking the connection	The connector is not connected properly, or the wire is faulty.	Clean the following connector terminal of the wire and reinsert them. If there is no continuity, replace the wire. • Folded branch claw motor - ZF PWB	
3	Checking the folding feedshift claw motor	The folding claw motor is not working properly.	Execute U240 [Z-Fold] > [Fold feedshift]. If the folding claw motor does not work properly, reinstall it and reconnect the connector. If it is not repaired, replace it.	
4	ZF PWB replacement	There is something wrong with the ZF PWB.	Replace the ZF PWB.	

C8EC0: Wrap up prevention motor error

The wrap prevention motor JAM was detected 5 times in a row. (Z fold unit)

Step	Check description	Assumed cause	Measures	Reference
1	Resetting the power	The program does not start up properly.	Turn off the power switch and pull out the power plug. After passing 5s, reinsert the power plug and turn on the power switch.	
2	Checking the connection	The connector is not connected properly, or the wire is faulty.	Clean the following connector terminal of the wire and reinsert them. If there is no continuity, replace the wire. • Entrapment prevention motor - ZF PWB	
3	Checking the wrap prevention motor	The wrap prevention motor is not operating properly.	Execute U240 [Z-Fold]> [Entra Prevent]. If the wrap prevention motor does not work properly, reinstall it and reconnect the connector. If it is not repaired, replace it.	
4	ZF PWB replacement	There is something wrong with the ZF PWB.	Replace the ZF PWB.	

C8ED0: Folding motor error

Folding motor JAM was detected 5 times in a row. (Z fold unit)

Step	Check description	Assumed cause	Measures	Reference
1	Resetting the power	The program does not start up properly.	Turn off the power switch and pull out the power plug. After passing 5s, reinsert the power plug and turn on the power switch.	
2	Checking the connection	The connector is not connected properly, or the wire is faulty.	Clean the terminals of the wire connector below and reinsert them. If there is no continuity, replace the wire. • Folding motor - ZF PWB	
3	Checking the folding motor	The folding motor is not working properly.	Execute U240 [Z-Fold] > [Fold]. If the folding motor does not work properly, reinstall it and reconnect the connector. If it is not repaired, replace it.	
4	ZF PWB replacement	There is something wrong with the ZF PWB.	Replace the ZF PWB.	

C8EE0:Secondary forward/reverse motor error

The secondary forward/reverse motor JAM was detected 5 times in a row. (Z fold unit)

Step	Check description	Assumed cause	Measures	Reference
1	Resetting the power	The program does not start up properly.	Turn off the power switch and pull out the power plug. After passing 5s, reinsert the power plug and turn on the power switch.	
2	Checking the connection	The connector is not connected properly, or the wire is faulty.	Clean the terminals of the wire connector below and reinsert them. If there is no continuity, replace the wire. • Secondary forward/reverse motor - ZF PWB	
3	Checking the secondary forward / reverse motor	The Secondary forward/ reverse motor is not operating properly.	Execute U240 [Z-Fold] > [Second Fwd / Rvs]. If the Secondary forward/reverse motor does not work properly, reinstall it and reconnect the connector. If it is not repaired, replace it.	
4	ZF PWB replacement	There is something wrong with the ZF PWB.	Replace the ZF PWB.	

C8EF0: Extra folding motor error

The extra fold motor JAM was detected 5 times in a row. (Z fold unit)

Step	Check description	Assumed cause	Measures	Reference
1	Resetting the power	The program does not start up properly.	Turn off the power switch and pull out the power plug. After passing 5s, reinsert the power plug and turn on the power switch.	
2	Checking the connection	The connector is not connected properly, or the wire is faulty.	Clean the following connector terminal of the wire and reinsert them. If there is no continuity, replace the wire. • Extra folding motor - ZF PWB	
3	Checking the extra folding motor	The fold motor is not working properly.	Execute U240 [Z-Fold] > [Incr Fold]. If the extra folding motor does not work properly, reinstall it and reconnect the connector. If it is not repaired, replace it.	
4	ZF PWB replacement	There is something wrong with the ZF PWB.	Replace the ZF PWB.	

C8F00: Sensor power supply error

An error in the sensor power supply (5V) was detected. (Z fold unit)

Step	Check description	Assumed cause	Measures	Reference
1	Resetting the power	The program does not start up properly.	Turn off the power switch and pull out the power plug. After passing 5s, reinsert the power plug and turn on the power switch.	
2	Checking the connection	The connector is not connected properly, or the wire is faulty.	Clean the following connector terminal of the wire and reinsert them. If there is no continuity, replace the wire. • ZF power supply PWB - ZF PWB	
3	Replacing the ZF power PWB	The ZF power supply PWB is faulty.	Replace the ZF power PWB.	
4	ZF PWB replacement	There is something wrong with the ZF PWB.	Replace the ZF PWB.	

C8F10: ZF IO PWB 1 error

An error occurred when accessing ZF IO PWB 1, and the error was detected even after retrying. (Z fold unit)

Step	Check description	Assumed cause	Measures	Reference
1	Resetting the power	The program does not start up properly.	Turn off the power switch and pull out the power plug. After passing 5s, reinsert the power plug and turn on the power switch.	
2	Checking the connection	The connector is not connected properly, or the wire is faulty.	Clean the following connector terminal of the wire and reinsert them. If there is no continuity, replace the wire. • ZF IO PWB 1 - ZF PWB	
3	Replacing the ZF IO PWB 1	The ZF IO PWB is faulty.	Replace ZF IO PWB 1.	
4	ZF PWB replacement	There is something wrong with the ZF PWB.	Replace the ZF PWB.	

C8F20: ZF IO PWB 2 error

An error occurred when accessing the ZF IO PWB 2, and the error was detected even after the retry. (Z fold unit)

Step	Check description	Assumed cause	Measures	Reference
1	Resetting the power	The program does not start up properly.	Turn off the power switch and pull out the power plug. After passing 5s, reinsert the power plug and turn on the power switch.	
2	Checking the connection	The connector is not connected properly, or the wire is faulty.	Clean the following connector terminal of the wire and reinsert them. If there is no continuity, replace the wire. • ZF IO PWB 2 - ZF IO PWB 1 • ZF IO PWB 1 - ZF PWB	
3	Replacing the ZF IO PWB 2	The ZF IO PWB 2 is faulty.	Replace ZF IO PWB 2.	
4	Replacing the ZF IO PWB 1	The ZF IO PWB is faulty.	Replace ZF IO PWB 1.	
5	ZF PWB replacement	There is something wrong with the ZF PWB.	Replace the ZF PWB.	

C9000: DP main program error/document processor communication error

- The main program has not been written.
- A communication error was detected 10 times in a row.

Step	Check description	Assumed cause	Measures	Reference
1	Firmware upgrade	The firmware version between the main unit and the document processor mismatches.	Upgrade the firmware for the main unit and the document processor to the latest version.	
2	Checking the connection	The connector is not connected properly, or the wire is faulty.	Clean the terminal of the following wire connectors and reconnect the connectors. If there is no continuity, replace the wire. • DP PWB - Engine PWB	
3	Replacing the DP PWB	The DP PWB is faulty.	Replace the DP PWB.	
4	Replacing the engine PWB	The engine PWB is faulty.	Replace the engine PWB.	

C9040: DP lift motor ascend error

The DP lift upper limit sensor does not turn on even after a certain period of time has passed since the DP lift motor started to rise, and the threshold value is exceeded.

Step	Check description	Assumed cause	Measures	Reference
1	Checking the original paper feed lift plate	The original paper feed lift plate is not installed properly. Or, the fulcrum on the rear side of the machine of the document lift plate is broken.	If the original paper feed lift plate does not move up and down manually, correct the part where it is caught. If it is damaged, replace it.	
2	Checking the connection	The connector is not connected properly, or the wire is faulty.	Clean the terminal of the following wire connectors and reconnect the connectors. If there is no continuity, replace the wire. • DP lift motor - DP PWB • DP lift upper limit sensor - DP PWB	
3	Replacing the DP lift motor	The DP lift motor is faulty.	Execute U243 [Lift Motor]. If the DP lift motor does not operate properly, replace it.	
4	Checking the DP lift upper limit sensor	The DP lift upper limit sensor is not properly attached, or it is faulty.	Execute U244 [Lift U-Limit]. If the DP lift upper limit sensor does not work properly, reinstall it. If it is not repaired, replace it.	
5	Replacing the DP PWB	The DP PWB is faulty.	Replace the DP PWB.	

C9050: DP lift motor descend error

The DF lift lower limit sensor does not turn on even after a certain period of time has passed since the DP lift motor started descending. (3 retries)

Step	Check description	Assumed cause	Measures	Reference
1	Checking the original paper feed lift plate	The original paper feed lift plate is not installed properly. Or, the fulcrum on the rear side of the machine of the document lift plate is broken.	If the original paper feed lift plate does not move up and down manually, correct the part where it is caught. If it is damaged, replace it.	
2	Checking the connection	The connector is not connected properly, or the wire is faulty.	Clean the terminal of the following wire connectors and reconnect the connectors. If there is no continuity, replace the wire. • DP lift motor - DP PWB • DP lift lower limit sensor - DP PWB	
3	Replacing the DP lift motor	The DP lift motor is faulty.	Execute U243 [Lift Motor]. If the DP lift motor does not operate properly, replace it.	
4	Checking the DP lift lower limit sensor	The DP lift lower limit sensor is not properly attached, or it is faulty.	Execute U244 [Lift L-Limit]. If the DP lift lower limit sensor does not work properly, reinstall it. If it is not repaired, replace it.	
5	Replacing the DP PWB	The DP PWB is faulty.	Replace the DP PWB.	

C9060: DP EEPROM error

- DP-7150: The value written to EEPROM and the value scanned are different. Or, the data value in the predetermined area of the backup memory in EEPROM is different from the specified value.
- Other than DP-7150: The values scanned in two places were compared, and a value mismatch was detected three times. Or, the read values were compared after writing, and a value mismatch was detected repeatedly three times.

Step	Check description	Assumed cause	Measures	Reference
1	Checking the EEPROM	The EEPROM is not properly installed.	Reattach the EEPROM on the DP PWB.	
2	Replacing the DP PWB	The DP PWB is faulty.	Replace the DP PWB.	
3	Replacing the EEPROM	The EEPROM on the DP PWB is faulty.	Contact to the service headquarters.	

C9070: Communication error between DP and DP SHD

A communication error between the DP PWB and the DPSHD PWB was detected during communication. (Retry 3 times) (Dual scan DP)

Step	Check description	Assumed cause	Measures	Reference
1	Checking the connection	The connector is not connected properly, or the wire is faulty.	Clean the terminal of the following wire connectors and reconnect the connectors. If there is no continuity, replace the wire. • DP SHD PWB - DP PWB	
2	Replacing the DPSHD PWB	The DPSHD PWB is faulty.	Replace the DPSHD PWB.	
3	Replacing the DP PWB	The DP PWB is faulty.	Replace the DP PWB.	

C9180: DP feed-shift motor error

- After starting to drive the DP feedshift motor, the change from OFF to ON of the DP branch sensor is not detected even if it is driven for a certain distance.
- Even if the retry is executed 3 times after the DP feedshift motor drive is stopped, the change from OFF to ON of the DP branch sensor is not detected.

Step	Check description	Assumed cause	Measures	Reference
1	Removing the original	The original accordion jam in the guide between the DP reversing tray and the DP registration roller (The position is not visible when the DP upper cover is opened)	Remove the original which is stuck in the guide between the DP reversing tray and DP registration roller.	
2	Cleaning the original conveying guide.	Sticky foreign objects adhere to the original conveying guide	Clean the original conveying guide.	
3	Resetting the power	The DP feed-shift motor is not controlled correctly.	Turn off the power switch and pull out the power plug. After passing 5s, reinsert the power plug and turn on the power switch.	
4	Firmware upgrade	The firmware is not the latest version.	Upgrade the engine firmware to the latest version	
5	Checking the DP feed-shift motor	The DP feed-shift motor is not rotated correctly. Or, there is an excess load.	After removing the DP feed-shift motor and repair it by rotating the drive section manually, reattach it.	
6	Checking the connection	The connector is not connected properly, or the wire is faulty.	Clean the connector terminal of the wire and reconnect. If there is no continuity, replace the wire. • DP feed-shift motor - DP PWB • DP feed-shift sensor - DP PWB	
7	Replacing the DP feed-shift motor	The DP feed-shift motor is faulty.	Replace the DP feed-shift motor.	
8	Checking the DP feed-shift sensor	The DP feed-shift sensor is not attached properly or faulty.	Execute U244 [Branch Motor HP]. If the DP branch sensor is not working properly, reinstall it. If it is not repaired, replace it.	
9	Replacing the DP PWB	The DP PWB is faulty.	Replace the DP PWB.	

C9200: DP double feed detection communication error

- When the power is turned on, the double feed detection signal is not connected twice in a row (retry once).
- A communication command with an invalid double feed detection was received three times in a row. (DP-7170)

Step	Check description	Assumed cause	Measures	Reference
1	Checking the connection	The connector is not connected properly, or the wire is faulty.	Clean the following connector terminal of the wire and reinsert them. If there is no continuity, replace the wire. • DP double feed sensor 2 - DP PWB	
2	Replacing the DP double feed sensor 2	The DP double feed sensor 2 is faulty.	Replace DP double feed sensor 2.	
3	Replacing the DP PWB	The DP PWB is faulty.	Replace the DP PWB.	

C9220: DP double feed detection backup error

- When writing to the CPU internal Flash of DP double feed sensor 2, the writing data and scanning data do not match three times in a row.
- Block erasure failed 3 times in a row.
- Writing is not completed even after a predetermined time has passed after writing. (DP-7170)

Step	Check description	Assumed cause	Measures	Reference
1	Replacing the DP double feed sensor 2	The DP double feed sensor 2 is faulty.	Replace DP double feed sensor 2.	

C9500: Image processing PWB error (Scanner)

Step	Check description	Assumed cause	Measures	Reference
1	Checking the connection	FFC is not connected properly. Or it is faulty.	Clean the FFC terminals of the following FFC and reconnect them. If the FFC terminal is deformed or broken, replace the FFC. • Engine PWB - Main PWB	
2	Replacing the main PWB	The main PWB is faulty.	Replace the main PWB.	
3	Replacing the engine PWB	The engine PWB is faulty.	Replace the engine PWB.	

C9510: Image processing circuit error (DP)

Step	Check description	Assumed cause	Measures	Reference
1	Checking the DP relay PWB	The DP relay PWB is not installed properly.	Reinstall the DP relay PWB.	
2	Checking the connection	The SATA cable is not properly connected, or it is faulty.	Please reinsert the SATA cable connector below. If there is no continuity, replace the SATA cable. • DPSHD PWB - DP relay PWB	
3	Replacing the DPSHD PWB	The DPSHD PWB is faulty.	Replace the DPSHD PWB.	
4	Replacing the DP relay PWB	The DP relay PWB is faulty.	Replace the DP relay PWB.	
5	Replacing the main PWB	The main PWB is faulty.	Replace the main PWB.	

C9530: Backup data error

Step	Check description	Assumed cause	Measures	Reference
1	Contacting to the Service Headquarters	(Not available to support on site)	Contact to the service headquarters.	

C9540: Backup data error

When multiple parts are replaced at the same time, the internal data is changed and it interferes with the machine operation. Consequently, the main unit cannot recover.

Step	Check description	Assumed cause	Measures	Reference
1	Checking the PWB	Multiple PWBs were replaced at the same time.	Recover to the original, if 2 or more of the following related parts were replaced at the same time. • Related parts: Memory, each PWB	
2	Checking the unit	Multiple units were replaced at the same time.	Be sure not to perform the following works at the same time when the memory or each PWB is replaced. • Replacing the drum unit or the developer unit • Relocating the drum units to other color's position inside a main unit	
3	Contacting to the Service Headquarters	Due to the factors other than the above simultaneous replacement.	Contact to the service headquarters.	

(2)System Error (Fxxxx)

(2-1)System Error code list

Error code: Contents
F000: Communication error between the main unit and CPU
F010: Program read error (SSD)
F020: System memory error (RAM reading/writing error or CPU memory error)
F021: System memory error (RAM reading/writing error or ASIC memory error)
F022: System memory error (RAM read/write error, or ASIC memory error)
F040: Communication error between the main unit and CPU (Communication error between the controller and the print engine)
F050: Engine main program error
F052: Panel engine program error
F053: Main program signature verification failure
F060: Communication failure of the non-volatile memory
F12x: Abnormal detection in the scan control section
F14x: Abnormal detection in the FAX control section
F15x: Abnormal detection in the authentication device control section
F17x: Abnormal detection in the print data control section
F18x: Abnormal detection in the Video control section
F1Dx: Abnormal detection in the image memory management section
F21x/F22x/F23x: Abnormal detection in the image processing section
F24x: Abnormal detection in the system management section
F25x: Abnormal detection in the network management section
F26x/F27x/F28x/F29x/F2Ax: Abnormal detection in the system management section
F2Bx / F2Cx / F2Dx / F2Ex / F2Fx / F30x / F31x / F32x: Abnormality detection in the network control unit
F33x: Abnormal detection in the scan management section
F34x: Abnormal detection in the panel management section
F35x: Abnormal detection in the print control / management section
F37x: Abnormal detection in the FAX management section
F38x: Abnormal detection in the authentication / authorization management section
F3Ax/F3Bx/F3Cx/F3Dx/F3Ex/F3Fx/F40x/F41x/F42x/F43x/F44x/F45x: Abnormal detection in the internal setting value management section
F46x: Abnormal detection in the print rendering section
F47x/F48x/F49x: Abnormal detection in the image edition processing section
F4Ax/F4Cx: Abnormal detection in the print rendering section
F4Dx: Abnormal detection in the internal setting value management section
F50x: Abnormal detection in the FAX management section
F52x / F53x / F55x / F56x / F57x: Abnormality detection in the JOB execution section
F61x: Abnormal detection in the report creation section
F63x: Abnormal detection in the device control section
F68x: Abnormal detection in the storage device control section
F6Dx/F6Ex/F6Fx/F70x/F71x/F72x/F73x/F74x/F75x: Abnormal detection in the external server management section
F90x: Abnormal detection in the extended application unification section
F93x: Abnormal detection in the extended application management section
FC0x: Abnormal detection in the system application
FC5x: Abnormal detection in the copy application
FCAx: Abnormal detection in the print application
FCFx: Abnormal detection in the send application

Error code: Contents
FD4x: Abnormal detection in the box application
FD9x: Abnormal detection in the FAX application
FDEx: Abnormal detection in the maintenance application
FF7x: Abnormal detection in the report application
FE5x: Abnormal detection in the external extended print application
FE9x: Abnormal detection in the application system
FF9x: Abnormal detection in the service linkage application processing section

(2-2)Content of System Error (Fxxxx)

F000: Communication error between the main unit and CPU

The panel cannot be detected since the CPU communication between the main PWB and the operation panel main PWB is unavailable.

Step	Check description	Assumed cause	Measures	Reference
1	Resetting the power	The communication between the main PWB and the operation panel main PWB is faulty.	Turn off the power switch and pull out the power plug. After passing 5s,reinsert the power plug and turn on the power switch.	
2	Firmware upgrade	The firmware is not the latest version.	Upgrade the main firmware and panel firmware to the latest version.	
3	Executing U021	The backup RAM data is faulty.	Execute U021 to initialize the backup RAM data.	
4	Checking the connection	The connector is not connected properly. Or,the wire or the SATA cable is faulty.	Clean the terminals of the connectors of the following wire and the SATA cable and reconnect them. If there is no continuity, replace the wire or the SATA cable. • Main PWB - Operation panel main PWB	
5	Replacing the main PWB	The main PWB is faulty.	Replace the main PWB.	
6	Replacing the operation panel main PWB	The operation panel main PWB is faulty.	Replace the panel main PWB.	

F010: Program read error (SSD)

The garbled 2bit data was detected during the program read from the flash memory.

Step	Check description	Assumed cause	Measures	Reference
1	(When the service call error appears after replacing the SSD) Replacing the SSD along the correct procedures	The firmware is not stored in the SSD.	Insert the USB memory device containing all released firmware into the main unit,and turn the main power on.	
2	Resetting the power	The main PWB does not properly start up.	Turn off the power switch and pull out the power plug. After passing 5s,reinsert the power plug and turn on the power switch.	
3	Executing U021	The backup RAM data is faulty.	Execute U021 to initialize the backup RAM data.	
4	Checking the SSD	The SSD is not installed properly.	Check if there is an error on the terminal of the SSD and Clean. After that,reconnect SSD.	
5	Replacing the SSD	The SSD is faulty.	Execute U026 to back up the SSD data. After that,replace SSD and turn on the power while USB memory that contains the firmware for the appropriate model is inserted to the main unit.	
6	Replacing the main PWB	The main PWB is faulty.	Replace the main PWB.	

F020: System memory error (RAM reading/writing error or CPU memory error)

The error appears during the reading/writing check of the RAM for the CPU when the main unit starts up.

Step	Check description	Assumed cause	Measures	Reference
1	Resetting the power	The main PWB does not properly start up.	Turn off the power switch and pull out the power plug. After passing 5s,reinsert the power plug and turn on the power switch.	
2	Executing U021	The backup RAM data is faulty.	Execute U021 to initialize the backup RAM data.	

F021: System memory error (RAM reading/writing error or ASIC memory error)

Error occurred when checking read/write of RAM for main PWB ASIC at start up.

Step	Check description	Assumed cause	Measures	Reference
1	Resetting the power	The main PWB does not properly start up.	Turn off the power switch and pull out the power plug. After passing 5s,reinsert the power plug and turn on the power switch.	
2	Executing U021	The backup RAM data is faulty.	Execute U021 to initialize the backup RAM data.	

F022: System memory error (RAM read/write error, or ASIC memory error)

An error occurred in the read / write check of the RAM for the DP relay PWB ASIC at startup. (Target: Simultaneous reading on both sides DP)

Step	Check description	Assumed cause	Measures	Reference
1	Resetting the power	The main PWB does not properly start up.	Turn off the power switch and pull out the power plug. After passing 5s,reinsert the power plug and turn on the power switch.	
2	Executing U021	The backup RAM data is faulty.	Execute U021 to initialize the backup RAM data.	
3	Checking the DP relay PWB	The DP relay PWB is not properly connected or installed. The DP relay PWB is faulty.	Reinstall the DP relay PWB and fix it with screws. If it does not repair,replace the DP relay PWB.	

F040: Communication error between the main unit and CPU (Communication error between the controller and the print engine)

There is an error in the communication between the main PWB and the engine PWB.

Step	Check description	Assumed cause	Measures	Reference
1	Resetting the power	The communication between the controller and the print engine is faulty.	Turn off the power switch and pull out the power plug. After passing 5s,reinsert the power plug and turn on the power switch.	
2	Checking the connection	The connector or FFC is not connected properly. Or, the wire or FFC is faulty.	Clean the connector terminal and FFC terminal of the electric wire below, and reconnect the connector and FFC. If there is something wrong with the wire or FFC, replace it. • Engine PWB - Main PWB • Engine PWB - Power supply PWB • Main PWB - Power supply PWB • Feed image PWB - Drum DLP connect PWB	
3	Replacing the main PWB	The main PWB is faulty.	Replace the main PWB.	
4	Replacing the engine PWB	The engine PWB is faulty.	Replace the engine PWB.	
5	Replacing the Power supply PWB	Power is not supplied from the Power supply PWB to the Main PWB (5V) or the engine PWB (5V/24V).	If there is no output of 5V and 24V from the Power supply PWB, replace the Power supply PWB.	
6	Replacing the feed drive PWB	The feed drive PWB is faulty.	Replace the feed drive PWB.	
7	Replacing the feed image PWB	The feed image PWB is faulty.	Replace the feed image PWB.	
8	Replacing the drum/developer relay PWB	The drum/developer relay PWB is faulty.	Replace the drum/developer relay PWB.	

F050: Engine main program error

The engine program cannot start up.

Step	Check description	Assumed cause	Measures	Reference
1	Resetting the power	The print engine ROM checksum is faulty.	Turn off the power switch and pull out the power plug. After passing 5s,reinsert the power plug and turn on the power switch.	
2	Checking the EEPROM	The EEPROM is not properly attached.	Reattach the EEPROM on the engine PWB.	
3	Checking the engine PWB	The connector or the FFC is not connected properly. Or,the wire,FFC,the PWB is faulty.	Clean the terminal of the connectors on the engine PWB,reconnect the connector of the wire,and reconnect the FFC terminal. If the wire or the FFC is faulty,repair or replace it. If not resolved,replace the engine PWB.	

F052: Panel engine program error

The panel program cannot start up.

Step	Check description	Assumed cause	Measures	Reference
1	Resetting the power	The panel RAM checksum is faulty.	Turn off the power switch and pull out the power plug. After passing 5s,reinsert the power plug and turn on the power switch.	
2	Checking the connection	The connector is not connected properly,or the wire is faulty.	Clean the connector on the operation panel main PWB and reconnect the connector. If there is no continuity,replace the wire.	

Step	Check description	Assumed cause	Measures	Reference
3	Replacing the operation panel main PWB	The operation panel main PWB is faulty.	Replace the panel main PWB.	

F053: Main program signature verification failure

An error was detected in the signature verification of the main program at startup.

Step	Check description	Assumed cause	Measures	Reference
1	Replace the Main PWB and SSD.	The program cannot be loaded correctly at startup.	Replace the main PWB and SSD.	

F060: Communication failure of the non-volatile memory

The charge counter could not be saved in non-volatile memory, and the difference was detected between RAM and non-volatile memory.

Step	Check description	Assumed cause	Measures	Reference
1	Resetting the power	The main program is faulty.	Turn off the power switch and pull out the power plug. After passing 5s,reinsert the power plug and turn on the power switch.	
2	Replacing the main PWB	The main PWB is faulty.	Replace the main PWB.	

F12x: Abnormal detection in the scan control section

The scan control between image sensor PWB and the main PWB is faulty. Or, the scan control among the DPSHD PWB, DP relay PWB and main PWB is faulty.

Step	Check description	Assumed cause	Measures	Reference
1	Resetting the power	The main PWB or image sensor PWB is not operating normally	Turn off the power switch and pull out the power plug. After passing 5s,reinsert the power plug and turn on the power switch.	
2	Executing U021	The backup RAM data is faulty.	Execute U021 to initialize the backup RAM data.	
3	Checking the connection	The connector or FFC is not connected properly. Or,the wire or FFC is faulty.	Clean the connector terminal and FFC terminal of the electric wire below,and reconnect the connector and FFC. If there is something wrong with the wire or FFC,replace it. • Image sensor PWB - Main PWB • DP relay PWB - DPSHD PWB (Duplex simultaneous scan DP mounting machine only)	
4	Checking the DP relay PWB (only for machines with duplex simultaneous scan DP)	The DP relay PWB is not properly connected or installed. The DP relay PWB is faulty.	Reinstall the DP relay PWB and fix it with screws. If it does not repair,replace the DP relay PWB.	
5	DP SHD PWB replacement (duplex simultaneous scan DP - equipped machine only)	The DPSHD PWB is faulty.	Replace the DPSHD PWB.	
6	Replacing the lens unit	The image sensor PWB is faulty.	Replace the lens unit.	
7	Replacing the main PWB	The main PWB is faulty.	Replace the main PWB.	

F14x: Abnormal detection in the FAX control section

The communication between the main PWB and the FAX PWB is interrupted, the signal is retransmitted, but it keeps waiting until the required signal arrives and locks.

Step	Check description	Assumed cause	Measures	Reference
1	Resetting the power	As the power reset was performed instantly,an error occurred in the communication between the controller and the FAX.	Turn off the power switch and pull out the power plug. After passing 5s,reinsert the power plug and turn on the power switch.	
2	Firmware upgrade	The firmware is not the latest version.	Upgrade the fax firmware to the latest version.	
3	Reinstalling the FAX PWB	The FAX PWB is not connected properly.	Turn off the power switch and pull out the power plug. After passing 5s,reattach the FAX PWB and reinsert the power plug. Then,turn on the power switch.	
4	Executing U021	The backup RAM data is faulty.	Execute U021 to initialize the backup RAM data.	
5	Replacing the FAX PWB	The FAX PWB is faulty.	Replace the FAX PWB.	
6	Checking the main PWB	The connector is not connected properly. Or,there is something wrong with the main PWB.	Reconnect the connector on the main PWB (connected to the eKUIO relay PWB). If it does not repair,replace the main PWB.	

F15x: Abnormal detection in the authentication device control section

The communication between the authentication device and the main PWB is faulty.

Step	Check description	Assumed cause	Measures	Reference
1	Resetting the power	The main PWB does not operate properly.	Turn off the power switch and pull out the power plug. After passing 5s,reinsert the power plug and turn on the power switch.	
2	Firmware upgrade	The firmware is not the latest version.	Upgrade the main firmware to the latest version.	
3	Executing U021	The backup RAM data is faulty.	Execute U021 to initialize the backup RAM data.	
4	Checking the connection	The connector is not connected properly,or the wire is faulty.	Clean the terminal of the following wire connectors and reconnect the connectors. If there is no continuity, replace the wire. • USB HUB PWB - Main PWB	
5	Replace the USB hub PWB.	The USB hub PWB is faulty.	Replace the USB hub PWB.	
6	Replacing the main PWB	The main PWB is faulty.	Replace the main PWB.	

F17x: Abnormal detection in the print data control section

The communication at the print data control section in the main PWB is faulty.

Step	Check description	Assumed cause	Measures	Reference
1	Resetting the power	The main PWB does not operate properly.	Turn off the power switch and pull out the power plug. After passing 5s,reinsert the power plug and turn on the power switch.	
2	Firmware upgrade	The firmware is not the latest version.	Upgrade the main firmware to the latest version.	
3	Executing U021	The backup RAM data is faulty.	Execute U021 to initialize the backup RAM data.	
4	Replacing the main PWB	The main PWB is faulty.	Replace the main PWB.	

F18x: Abnormal detection in the Video control section

There is an error in the communication between the main PWB and the engine PWB.

Step	Check description	Assumed cause	Measures	Reference
1	Resetting the power	As the power reset was performed instantly,an error occurred in the communication between the controller and the engine.	Turn off the power switch and pull out the power plug. After passing 5s,reinsert the power plug and turn on the power switch.	
2	Executing U021	The backup RAM data is faulty.	Execute U021 to initialize the backup RAM data.	
3	Checking the connection	FFC is not connected properly. Or it is faulty.	Clean the FFC terminals of the following FFC and reconnect them. If the FFC terminal is deformed or broken,replace the FFC. • Engine PWB - Main PWB	
4	Replacing the engine PWB	The engine PWB is faulty.	Replace the engine PWB.	
5	Replacing the main PWB	The main PWB is faulty.	Replace the main PWB.	

F1Dx: Abnormal detection in the image memory management section

The communication in the image memory management section in the main PWB is faulty.

Step	Check description	Assumed cause	Measures	Reference
1	Resetting the power	The main PWB does not operate properly.	Turn off the power switch and pull out the power plug. After passing 5s,reinsert the power plug and turn on the power switch.	
2	Firmware upgrade	The firmware is not the latest version.	Upgrade the main firmware to the latest version.	
3	Executing U021	The backup RAM data is faulty.	Execute U021 to initialize the backup RAM data.	
4	Replacing the main PWB	The main PWB is faulty.	Replace the main PWB.	

F21x/F22x/F23x: Abnormal detection in the image processing section

The communication at the image processing section in the main PWB is faulty.

Step	Check description	Assumed cause	Measures	Reference
1	Resetting the power	The main PWB does not operate properly.	Turn off the power switch and pull out the power plug. After passing 5s,reinsert the power plug and turn on the power switch.	
2	Firmware upgrade	The firmware is not the latest version.	Upgrade the main firmware to the latest version.	
3	Executing U021	The backup RAM data is faulty.	Execute U021 to initialize the backup RAM data.	
4	Replacing the main PWB	The main PWB is faulty.	Replace the main PWB.	

F24x: Abnormal detection in the system management section

The communication at the system management section in the main PWB is faulty.

Step	Check description	Assumed cause	Measures	Reference
1	Resetting the power	The main PWB does not operate properly.	Turn off the power switch and pull out the power plug. After passing 5s,reinsert the power plug and turn on the power switch.	
2	Firmware upgrade	The firmware is not the latest version.	Upgrade the main firmware to the latest version.	
3	Executing U021	The backup RAM data is faulty.	Execute U021 to initialize the backup RAM data.	
4	Replacing the main PWB	The main PWB is faulty.	Replace the main PWB.	

F25x: Abnormal detection in the network management section

The communication at the network management section in the main PWB is faulty.

Step	Check description	Assumed cause	Measures	Reference
1	Resetting the power	The main PWB does not operate properly.	Turn off the power switch and pull out the power plug. After passing 5s,reinsert the power plug and turn on the power switch.	
2	Firmware upgrade	The firmware is not the latest version.	Upgrade the main firmware to the latest version.	
3	Executing U021	The backup RAM data is faulty.	Execute U021 to initialize the backup RAM data.	
4	Checking the main PWB	The Ethernet cable connection or the main PWB is faulty.	Reconnect the Ethernet cable connector on the main PWB. If it does not repair,replace the main PWB.	

F26x/F27x/F28x/F29x/F2Ax: Abnormal detection in the system management section

The communication at the system management section in the main PWB is faulty.

Step	Check description	Assumed cause	Measures	Reference
1	Resetting the power	The main PWB does not operate properly.	Turn off the power switch and pull out the power plug. After passing 5s,reinsert the power plug and turn on the power switch.	
2	Firmware upgrade	The firmware is not the latest version.	Upgrade the main firmware to the latest version.	
3	Executing U021	The backup RAM data is faulty.	Execute U021 to initialize the backup RAM data.	
4	Replacing the main PWB	The main PWB is faulty.	Replace the main PWB.	

F2Bx / F2Cx / F2Dx / F2Ex / F2Fx / F30x / F31x / F32x: Abnormality detection in the network control unit

The communication at the network control section in the main PWB is faulty.

Step	Check description	Assumed cause	Measures	Reference
1	Resetting the power	The main PWB does not operate properly.	Turn off the power switch and pull out the power plug. After passing 5s,reinsert the power plug and turn on the power switch.	
2	Firmware upgrade	The firmware is not the latest version.	Upgrade the main firmware to the latest version.	
3	Executing U021	The backup RAM data is faulty.	Execute U021 to initialize the backup RAM data.	
4	Checking the connection (when F2BX is lit)	The Ethernet cable connection is faulty.	Reconnect the Ethernet cable connector on the main PWB.	
5	Replacing the main PWB	The main PWB is faulty.	Replace the main PWB.	

F33x: Abnormal detection in the scan management section

The scan control between the image sensor PWB and the main PWB is faulty. Or, the scan control among the DPSHD PWB, the DP relay PWB and the main PWB is faulty.

Step	Check description	Assumed cause	Measures	Reference
1	Resetting the power	The main PWB and image sensor PWB are not operating normally.	Turn off the power switch and pull out the power plug. After passing 5s,reinsert the power plug and turn on the power switch.	
2	Executing U021	The backup RAM data is faulty.	Execute U021 to initialize the backup RAM data.	
3	Checking the connection	The connector or FFC is not connected properly. Or,the wire or FFC is faulty.	Clean the connector terminal and FFC terminal of the electric wire below,and reconnect the connector and FFC. If there is something wrong with the wire or FFC,replace it. • Image sensor PWB - Main PWB • DP relay PWB - DPSHD PWB (Duplex simultaneous scan DP mounting machine only)	
4	Checking the DP relay PWB (only for machines with duplex simultaneous scan DP)	The DP relay PWB is not properly connected or installed. The DP relay PWB is faulty.	Reinstall the DP relay PWB and fix it with screws. If it does not repair,replace the DP relay PWB.	
5	DP SHD PWB replacement (duplex simultaneous scan DP - equipped machine only)	The DPSHD PWB is faulty.	Replace the DPSHD PWB.	
6	Replacing the lens unit	The image sensor PWB is faulty.	Replace the lens unit.	
7	Replacing the main PWB	The main PWB is faulty.	Replace the main PWB.	

F34x: Abnormal detection in the panel management section

The communication between the main PWB and the operation panel main PWB is faulty.

Step	Check description	Assumed cause	Measures	Reference
1	Resetting the power	The communication between the main PWB and the operation panel main PWB is faulty.	Turn off the power switch and pull out the power plug. After passing 5s,reinsert the power plug and turn on the power switch.	
2	Firmware upgrade	The firmware is not the latest version.	Upgrade the main firmware and panel firmware to the latest version.	
3	Executing U021	The backup RAM data is faulty.	Execute U021 to initialize the backup RAM data.	
4	Checking the connection	The connector is not connected properly. Or,the wire or the SATA cable is faulty.	Clean the terminals of the connectors of the following wire and the SATA cable and reconnect them. If there is no continuity, replace the wire or the SATA cable. • Main PWB - Operation panel main PWB	
5	Replacing the operation panel main PWB	The operation panel main PWB is faulty.	Replace the panel main PWB.	
6	Replacing the main PWB	The main PWB is faulty.	Replace the main PWB.	

F35x: Abnormal detection in the print control / management section

The communication at the print control management section in the main PWB is faulty.

Step	Check description	Assumed cause	Measures	Reference
1	Resetting the power	The main PWB does not operate properly.	Turn off the power switch and pull out the power plug. After passing 5s,reinsert the power plug and turn on the power switch.	
2	Firmware upgrade	The firmware is not the latest version.	Upgrade the main firmware to the latest version.	
3	Executing U021	The backup RAM data is faulty.	Execute U021 to initialize the backup RAM data.	
4	Replacing the main PWB	The main PWB is faulty.	Replace the main PWB.	

F37x: Abnormal detection in the FAX management section

The communication at the FAX control section in the main PWB is faulty.

Step	Check description	Assumed cause	Measures	Reference
1	Resetting the power	The main PWB does not operate properly.	Turn off the power switch and pull out the power plug. After passing 5s,reinsert the power plug and turn on the power switch.	
2	Firmware upgrade	The firmware is not the latest version.	Upgrade the main firmware to the latest version.	
3	Executing U021	The backup RAM data is faulty.	Execute U021 to initialize the backup RAM data.	
4	Replacing the main PWB	The main PWB is faulty.	Replace the main PWB.	

F38x: Abnormal detection in the authentication / authorization management section

The communication at the authentication / authorization management section in the main PWB is faulty.

Step	Check description	Assumed cause	Measures	Reference
1	Resetting the power	The main PWB does not operate properly.	Turn off the power switch and pull out the power plug. After passing 5s,reinsert the power plug and turn on the power switch.	
2	Firmware upgrade	The firmware is not the latest version.	Upgrade the main firmware to the latest version.	
3	Executing U021	The backup RAM data is faulty.	Execute U021 to initialize the backup RAM data.	
4	Replacing the main PWB	The main PWB is faulty.	Replace the main PWB.	

F3Ax/F3Bx/F3Cx/F3Dx/F3Ex/F3Fx/F40x/F41x/F42x/F43x/F44x/F45x: Abnormal detection in the internal setting value management section

The communication at the internal setting value management section in the main PWB is faulty.

Step	Check description	Assumed cause	Measures	Reference
1	Resetting the power	The main PWB does not operate properly.	Turn off the power switch and pull out the power plug. After passing 5s,reinsert the power plug and turn on the power switch.	
2	Firmware upgrade	The firmware is not the latest version.	Upgrade the main firmware to the latest version.	
3	Executing U021	The backup RAM data is faulty.	Execute U021 to initialize the backup RAM data.	
4	Replacing the main PWB	The main PWB is faulty.	Replace the main PWB.	

F46x: Abnormal detection in the print rendering section

The communication at the print rendering section in the main PWB is faulty.

Step	Check description	Assumed cause	Measures	Reference
1	Resetting the power	The main PWB does not operate properly.	Turn off the power switch and pull out the power plug. After passing 5s,reinsert the power plug and turn on the power switch.	
2	Firmware upgrade	The firmware is not the latest version.	Upgrade the main firmware to the latest version.	
3	Executing U021	The backup RAM data is faulty.	Execute U021 to initialize the backup RAM data.	
4	Replacing the main PWB	The main PWB is faulty.	Replace the main PWB.	

F47x/F48x/F49x: Abnormal detection in the image edition processing section

The communication at the image edition processing section in the main PWB is faulty.

Step	Check description	Assumed cause	Measures	Reference
1	Resetting the power	The main PWB does not operate properly.	Turn off the power switch and pull out the power plug. After passing 5s,reinsert the power plug and turn on the power switch.	
2	Firmware upgrade	The firmware is not the latest version.	Upgrade the main firmware to the latest version.	
3	Executing U021	The backup RAM data is faulty.	Execute U021 to initialize the backup RAM data.	
4	Replacing the main PWB	The main PWB is faulty.	Replace the main PWB.	

F4Ax/F4Cx: Abnormal detection in the print rendering section

The communication at the print rendering section in the main PWB is faulty.

Step	Check description	Assumed cause	Measures	Reference
1	Resetting the power	The main PWB does not operate properly.	Turn off the power switch and pull out the power plug. After passing 5s,reinsert the power plug and turn on the power switch.	
2	Firmware upgrade	The firmware is not the latest version.	Upgrade the main firmware to the latest version.	
3	Executing U021	The backup RAM data is faulty.	Execute U021 to initialize the backup RAM data.	
4	Replacing the main PWB	The main PWB is faulty.	Replace the main PWB.	

F4Dx: Abnormal detection in the internal setting value management section

The communication at the internal setting value management section in the main PWB is faulty.

Step	Check description	Assumed cause	Measures	Reference
1	Resetting the power	The main PWB does not operate properly.	Turn off the power switch and pull out the power plug. After passing 5s,reinsert the power plug and turn on the power switch.	
2	Firmware upgrade	The firmware is not the latest version.	Upgrade the main firmware to the latest version.	
3	Executing U021	The backup RAM data is faulty.	Execute U021 to initialize the backup RAM data.	
4	Replacing the main PWB	The main PWB is faulty.	Replace the main PWB.	

F50x: Abnormal detection in the FAX management section

The communication at the FAX control section in the main PWB is faulty.

Step	Check description	Assumed cause	Measures	Reference
1	Resetting the power	The main PWB does not operate properly.	Turn off the power switch and pull out the power plug. After passing 5s,reinsert the power plug and turn on the power switch.	
2	Firmware upgrade	The firmware is not the latest version.	Upgrade the main firmware to the latest version.	
3	Executing U021	The backup RAM data is faulty.	Execute U021 to initialize the backup RAM data.	
4	Replacing the main PWB	The main PWB is faulty.	Replace the main PWB.	

F52x / F53x / F55x / F56x / F57x: Abnormality detection in the JOB execution section

Abnormality communication in a JOB execution part of the Main PWB.

Step	Check description	Assumed cause	Measures	Reference
1	Resetting the power	The main PWB does not operate properly.	Turn off the power switch and pull out the power plug. After passing 5s,reinsert the power plug and turn on the power switch.	
2	Firmware upgrade	The firmware is not the latest version.	Upgrade the main firmware to the latest version.	
3	Executing U021	The backup RAM data is faulty.	Execute U021 to initialize the backup RAM data.	
4	Replacing the main PWB	The main PWB is faulty.	Replace the main PWB.	

F61x: Abnormal detection in the report creation section

The communication at the report creation section in the main PWB is faulty.

Step	Check description	Assumed cause	Measures	Reference
1	Resetting the power	The main PWB does not operate properly.	Turn off the power switch and pull out the power plug. After passing 5s,reinsert the power plug and turn on the power switch.	
2	Firmware upgrade	The firmware is not the latest version.	Upgrade the main firmware to the latest version.	
3	Executing U021	The backup RAM data is faulty.	Execute U021 to initialize the backup RAM data.	
4	Replacing the main PWB	The main PWB is faulty.	Replace the main PWB.	

F63x: Abnormal detection in the device control section

The communication at the device control section in the main PWB is faulty.

Step	Check description	Assumed cause	Measures	Reference
1	Resetting the power	The main PWB does not operate properly.	Turn off the power switch and pull out the power plug. After passing 5s,reinsert the power plug and turn on the power switch.	
2	Firmware upgrade	The firmware is not the latest version.	Upgrade the main firmware to the latest version.	
3	Executing U021	The backup RAM data is faulty.	Execute U021 to initialize the backup RAM data.	
4	Replacing the main PWB	The main PWB is faulty.	Replace the main PWB.	

F68x: Abnormal detection in the storage device control section

The communication at the storage device control section in the main PWB is faulty.

Step	Check description	Assumed cause	Measures	Reference
1	Resetting the power	The main PWB does not operate properly.	Turn off the power switch and pull out the power plug. After passing 5s,reinsert the power plug and turn on the power switch.	
2	Firmware upgrade	The firmware is not the latest version.	Upgrade the main firmware to the latest version.	
3	Executing U021	The backup RAM data is faulty.	Execute U021 to initialize the backup RAM data.	
4	Replacing the main PWB	The main PWB is faulty.	Replace the main PWB.	

F6Dx/F6Ex/F6Fx/F70x/F71x/F72x/F73x/F74x/F75x: Abnormal detection in the external server management section

The communication at the external server management section in the main PWB is faulty.

Step	Check description	Assumed cause	Measures	Reference
1	Resetting the power	The main PWB does not operate properly.	Turn off the power switch and pull out the power plug. After passing 5s,reinsert the power plug and turn on the power switch.	
2	Firmware upgrade	The firmware is not the latest version.	Upgrade the main firmware to the latest version.	
3	Executing U021	The backup RAM data is faulty.	Execute U021 to initialize the backup RAM data.	
4	Checking the external server	The external server does not operate properly.	Check the external server operation.	
5	Checking the network settings	The network setting is not proper.	Correct the settings in the Network Settings via the Command Center.	
6	Replacing the main PWB	The main PWB is faulty.	Replace the main PWB.	

F90x: Abnormal detection in the extended application unification section

The communication at the extended application unification section in the main PWB is faulty.

Step	Check description	Assumed cause	Measures	Reference
1	Resetting the power	The main PWB does not operate properly.	Turn off the power switch and pull out the power plug. After passing 5s,reinsert the power plug and turn on the power switch.	
2	Firmware upgrade	The firmware is not the latest version.	Upgrade the main firmware to the latest version.	
3	Executing U021	The backup RAM data is faulty.	Execute U021 to initialize the backup RAM data.	
4	Replacing the main PWB	The main PWB is faulty.	Replace the main PWB.	

F93x: Abnormal detection in the extended application management section

The communication at the extended application management section in the main PWB is faulty.

Step	Check description	Assumed cause	Measures	Reference
1	Resetting the power	The main PWB does not operate properly.	Turn off the power switch and pull out the power plug. After passing 5s,reinsert the power plug and turn on the power switch.	
2	Firmware upgrade	The firmware is not the latest version.	Upgrade the main firmware to the latest version.	
3	Executing U021	The backup RAM data is faulty.	Execute U021 to initialize the backup RAM data.	
4	Replacing the main PWB	The main PWB is faulty.	Replace the main PWB.	

FC0x: Abnormal detection in the system application

The communication at the system application in the main PWB is faulty.

Step	Check description	Assumed cause	Measures	Reference
1	Resetting the power	The main PWB does not operate properly.	Turn off the power switch and pull out the power plug. After passing 5s,reinsert the power plug and turn on the power switch.	
2	Firmware upgrade	The firmware is not the latest version.	Upgrade the main firmware to the latest version.	
3	Executing U021	The backup RAM data is faulty.	Execute U021 to initialize the backup RAM data.	
4	Replacing the main PWB	The main PWB is faulty.	Replace the main PWB.	

FC5x: Abnormal detection in the copy application

The communication at the copy application in the main PWB is faulty.

Step	Check description	Assumed cause	Measures	Reference
1	Resetting the power	The main PWB does not operate properly.	Turn off the power switch and pull out the power plug. After passing 5s,reinsert the power plug and turn on the power switch.	
2	Firmware upgrade	The firmware is not the latest version.	Upgrade the main firmware to the latest version.	
3	Executing U021	The backup RAM data is faulty.	Execute U021 to initialize the backup RAM data.	
4	Replacing the main PWB	The main PWB is faulty.	Replace the main PWB.	

FCAx: Abnormal detection in the print application

The communication at the print application in the main PWB is faulty.

Step	Check description	Assumed cause	Measures	Reference
1	Resetting the power	The main PWB does not operate properly.	Turn off the power switch and pull out the power plug. After passing 5s,reinsert the power plug and turn on the power switch.	
2	Firmware upgrade	The firmware is not the latest version.	Upgrade the main firmware to the latest version.	
3	Executing U021	The backup RAM data is faulty.	Execute U021 to initialize the backup RAM data.	
4	Replacing the main PWB	The main PWB is faulty.	Replace the main PWB.	

FCFx: Abnormal detection in the send application

The communication at the send application in the main PWB is faulty.

Step	Check description	Assumed cause	Measures	Reference
1	Resetting the power	The main PWB does not operate properly.	Turn off the power switch and pull out the power plug. After passing 5s,reinsert the power plug and turn on the power switch.	
2	Firmware upgrade	The firmware is not the latest version.	Upgrade the main firmware to the latest version.	
3	Executing U021	The backup RAM data is faulty.	Execute U021 to initialize the backup RAM data.	
4	Replacing the main PWB	The main PWB is faulty.	Replace the main PWB.	

FD4x: Abnormal detection in the box application

The communication at the box application in the main PWB is faulty.

Step	Check description	Assumed cause	Measures	Reference
1	Resetting the power	The main PWB does not operate properly.	Turn off the power switch and pull out the power plug. After passing 5s,reinsert the power plug and turn on the power switch.	
2	Firmware upgrade	The firmware is not the latest version.	Upgrade the main firmware to the latest version.	
3	Executing U021	The backup RAM data is faulty.	Execute U021 to initialize the backup RAM data.	
4	Replacing the main PWB	The main PWB is faulty.	Replace the main PWB.	

FD9x: Abnormal detection in the FAX application

The communication at the FAX application in the main PWB is faulty.

Step	Check description	Assumed cause	Measures	Reference
1	Resetting the power	The main PWB does not operate properly.	Turn off the power switch and pull out the power plug. After passing 5s,reinsert the power plug and turn on the power switch.	
2	Firmware upgrade	The firmware is not the latest version.	Upgrade the main firmware to the latest version.	
3	Executing U021	The backup RAM data is faulty.	Execute U021 to initialize the backup RAM data.	
4	Replacing the main PWB	The main PWB is faulty.	Replace the main PWB.	

FDEx: Abnormal detection in the maintenance application

The communication at the maintenance application in the main PWB is faulty.

Step	Check description	Assumed cause	Measures	Reference
1	Resetting the power	The main PWB does not operate properly.	Turn off the power switch and pull out the power plug. After passing 5s,reinsert the power plug and turn on the power switch.	
2	Firmware upgrade	The firmware is not the latest version.	Upgrade the main firmware to the latest version.	
3	Executing U021	The backup RAM data is faulty.	Execute U021 to initialize the backup RAM data.	
4	Replacing the main PWB	The main PWB is faulty.	Replace the main PWB.	

FF7x: Abnormal detection in the report application

The communication at the report application in the main PWB is faulty.

Step	Check description	Assumed cause	Measures	Reference
1	Resetting the power	The main PWB does not operate properly.	Turn off the power switch and pull out the power plug. After passing 5s,reinsert the power plug and turn on the power switch.	
2	Firmware upgrade	The firmware is not the latest version.	Upgrade the main firmware to the latest version.	
3	Executing U021	The backup RAM data is faulty.	Execute U021 to initialize the backup RAM data.	
4	Replacing the main PWB	The main PWB is faulty.	Replace the main PWB.	

FE5x: Abnormal detection in the external extended print application

The communication at the external extended print application in the main PWB is faulty.

Step	Check description	Assumed cause	Measures	Reference
1	Resetting the power	The main PWB does not operate properly.	Turn off the power switch and pull out the power plug. After passing 5s,reinsert the power plug and turn on the power switch.	
2	Firmware upgrade	The firmware is not the latest version.	Upgrade the main firmware to the latest version.	
3	Executing U021	The backup RAM data is faulty.	Execute U021 to initialize the backup RAM data.	
4	Replacing the main PWB	The main PWB is faulty.	Replace the main PWB.	

FE9x: Abnormal detection in the application system

The communication at the application system in the main PWB is faulty.

Step	Check description	Assumed cause	Measures	Reference
1	Resetting the power	The main PWB does not operate properly.	Turn off the power switch and pull out the power plug. After passing 5s,reinsert the power plug and turn on the power switch.	
2	Firmware upgrade	The firmware is not the latest version.	Upgrade the main firmware to the latest version.	
3	Executing U021	The backup RAM data is faulty.	Execute U021 to initialize the backup RAM data.	
4	Replacing the main PWB	The main PWB is faulty.	Replace the main PWB.	

FF9x: Abnormal detection in the service linkage application processing section

The communication at the service linkage application processing section in the main PWB is faulty.

Step	Check description	Assumed cause	Measures	Reference
1	Resetting the power	The main PWB does not operate properly.	Turn off the power switch and pull out the power plug. After passing 5s,reinsert the power plug and turn on the power switch.	
2	Firmware upgrade	The firmware is not the latest version.	Upgrade the main firmware to the latest version.	
3	Executing U021	The backup RAM data is faulty.	Execute U021 to initialize the backup RAM data.	
4	Replacing the main PWB	The main PWB is faulty.	Replace the main PWB.	

7 - 4 FAX Related Errors

(1)FAX Related Errors

No.	Contents
(1)	The login fails with other than the ID card
(2)	C0030: FAX PWB system error
(3)	C0070: FAX PWB incompatible detection error
(4)	C0650: FAX image storage pair-check error
(5)	C0830: FAX PWB flash program area checksum error
(6)	C0870: PC/FAX Image data transmission error
(7)	C0920: FAX file system error
(8)	C0950: FAX job stay error
(9)	F14D: Abnormal detection at the FAX control section
(10)	The FAX cannot be sent
(11)	The beep sounds when the copying or printing is finished
(12)	In case of sending an A3/Ledger or B4 size original by internet fax, all will be sent by A4/Letter.

Content of FAX Related Errors

(1-1)The login fails with other than the ID card

Step	Check description	Assumed cause	Measures	Reference
1	Changing the setting	Log in by the key board is not allowed.	Select [Department Management/ Authentication] > [IC Card Settings] - [KeyPWB Login] from the system menu and set it to "Allow".	

(1-2)C0030: FAX PWB system error

The FAX processing cannot be continued due to the FAX firmware error.

Step	Check description	Assumed cause	Measures	Reference
1	Reinstalling the FAX PWB	The FAX PWB does not operate properly.	Turn off the power switch and pull out the power plug. After passing 5s,reattach the FAX PWB and reinsert the power plug. Then,turn on the power switch.	
2	Firmware upgrade	The firmware is faulty.	Reinstall the FAX firmware.	
3	Replacing the FAX PWB	The FAX PWB is faulty.	Replace the FAX PWB.	

(1-3)C0070: FAX PWB incompatible detection error

Abnormal detection of FAX control PWB incompatibility in the initial communication with the FAX control PWB, any normal communication command is not transmitted.

Step	Check description	Assumed cause	Measures	Reference
1	Checking the FAX PWB	The incompatible FAX PWB is installed.	Install the FAX PWB for the applicable model.	
2	Firmware upgrade	The firmware is faulty.	Reinstall the FAX firmware.	
3	Replacing the main PWB	The main PWB is faulty.	Replace the main PWB.	

(1-4)C0650: FAX image storage pair-check error

The SSD (FAX image storage) used in other main unit is installed.

Step	Check description	Assumed cause	Measures	Reference
1	Checking the SSD	The SSD (FAX image storage) already used in other unit is installed.	When installing the SSD used once,replace with the correct SSD.	
2	Executing U671	The SSD (FAX image storage) already used in other unit is reused without executing U671.	When installing a used SSD,execute U671 [Fax Data Clr].	
3	Reinstalling the SSD	The SSD (FAX image storage) is not properly installed.	Be sure to install the SSD to the connector on the main PWB.	
4	Replacing the SSD	The SSD (FAX image storage) is faulty.	Replace with the new SSD.	
5	Replacing the main PWB	The main PWB is faulty.	Replace the main PWB.	

(1-5)C0830: FAX PWB flash program area checksum error

The program stored in the flash memory on the FAX PWB is broken so it cannot perform.

Step	Check description	Assumed cause	Measures	Reference
1	Firmware upgrade	The firmware is faulty.	Reinstall the FAX firmware.	
2	Reinstalling the FAX PWB	The FAX PWB is not connected properly.	Turn off the power switch and pull out the power plug. After passing 5s,reattach the FAX PWB and reinsert the power plug. Then,turn on the power switch.	
3	Initializing the fax	The data in the FAX PWB is faulty.	Execute U600 to initialize the FAX.	
4	Replacing the FAX PWB	The FAX PWB is faulty.	Replace the FAX PWB.	

(1-6)C0870: PC/FAX Image data transmission error

Data was not properly transmitted even if the specified times of retry were made when the large volume data is transmitted between the FAX PWB and the main PWB.

Step	Check description	Assumed cause	Measures	Reference
1	Reinstalling the FAX PWB	The FAX PWB does not operate properly.	Turn off the power switch and pull out the power plug. After passing 5s,reattach the FAX PWB and reinsert the power plug. Then,turn on the power switch.	
2	Initializing the fax	The data in the FAX PWB is faulty.	Execute U600 to initialize the FAX.	
3	Firmware upgrade	The firmware is faulty.	Upgrade the fax firmware to the latest version.	
4	Replacing the FAX PWB	The FAX PWB is faulty.	Replace the FAX PWB.	
5	Replacing the main PWB	The main PWB is faulty.	Replace the main PWB.	
6	Executing U024	The data stored in the SSD is faulty.	Execute U024 [SSD Format].	

(1-7)C0920: FAX file system error

The backup data could not be stored since the file system of the flash memory is faulty.

Step	Check description	Assumed cause	Measures	Reference
1	Initializing the fax	FAX control values are incorrect	Execute U600 to initialize the FAX.	
2	Reinstalling the FAX PWB	The FAX PWB does not operate properly.	Turn off the power switch and pull out the power plug. After passing 5s,reattach the FAX PWB and reinsert the power plug. Then,turn on the power switch.	
3	Reconnecting the FAX PWB	The FAX PWB is not connected properly.	Reconnect the fax PWB to the main PWB.	
4	Firmware upgrade	The firmware is faulty.	Reinstall the FAX firmware.	
5	Replacing the FAX PWB	The FAX PWB is faulty.	Replace the FAX PWB.	

(1-8)C0950: FAX job stay error

Print processing of the received FAX could not be executed and the job continues staying.

Step	Check description	Assumed cause	Measures	Reference
1	Resetting the power	The printing process is not properly executed.	Turn off the power switch and pull out the power plug. After passing 5s,reinsert the power plug and turn on the power switch.	
2	Firmware upgrade	The firmware is faulty.	Upgrade the main firmware to the latest version.	

(1-9)F14D: Abnormal detection at the FAX control section

Step	Check description	Assumed cause	Measures	Reference
1	Firmware upgrade	The firmware is faulty.	Upgrade the main firmware and the FAX firmware to the latest version.	
2	Reconnecting the FAX PWB	The FAX PWB is not connected properly.	Reconnect the fax PWB to the main PWB.	
3	Replacing the FAX PWB	The FAX PWB is faulty.	Replace the FAX PWB.	

(1-10)The FAX cannot be sent

Step	Check description	Assumed cause	Measures	Reference
1	Checking the connection of the modular cable	The modular cable disconnects.	Reconnect the modular cable.	
2	Changing the connection	If the adapter and the switching device or the like is connected to the telephone line,it is affected.	Directly connect the main unit to the telephone line.	
3	Changing the setting	The line settings are incorrect.	Correct the line settings. (Reduce the transmission speed,etc.)	
4	Checking the status at the destination unit.	The destination unit is busy.	Wait a while and then redial the number if busy tones are heard.	
5	Checking the status at the destination unit.	The modular cable is disconnected in the destination unit if the destination unit does not receive the calling.	Request the destination unit to reconnect the modular cable.	
6	Checking the setting at the destination unit	The manual reception is set in the destination unit if the destination unit does not receive the calling.	Ask the destination unit to change the reception settings.	
7	Changing the sending content	When transmitting the data to the other country,the communication line is automatically cut.	Input a pause at the last of the destination FAX number.	

(1-11)The beep sounds when the copying or printing is finished

Step	Check description	Assumed cause	Measures	Reference
1	Firmware upgrade	The firmware is not the latest version.	Upgrade the fax firmware to the latest version.	

(1-12)In case of sending an A3/Ledger or B4 size original by internet fax, all will be sent by A4/Letter.

Step	Check description	Assumed cause	Measures	Reference
1	Change settings (normal original size is fixed to A4/ Letter)	The paper size at the time of transmission is not set properly.	When sending an Internet fax,set the paper size to A3/Ledger or B4 according to the receivable size of the other party in [Mother device conditions] > [Paper size].	
2	Change settings (when the original size to be sent to the other party is fixed to A3/ Ledger or B4)	The paper size at the time of transmission is not set properly.	Select the i - fax icon on the address book registration screen of the other party,and select [Mother device conditions] > [Paper size] to set the paper size to A3/Ledger or B4 according to the receivable size of the other party. Please set to.	

(2)Communication Errors

Error codes are listed on the communication reports, activity report, etc. The codes consist of an error code indication U followed by a 5-digit number. (The V.34 error is indicated with E of the error code and 5-digit number)

Regarding the 5-digit number, upper 3 digits indicate error and large classification of cause, lower 2 digits small classification of cause. The lower 2 digits are 00 for the item not requiring the category.

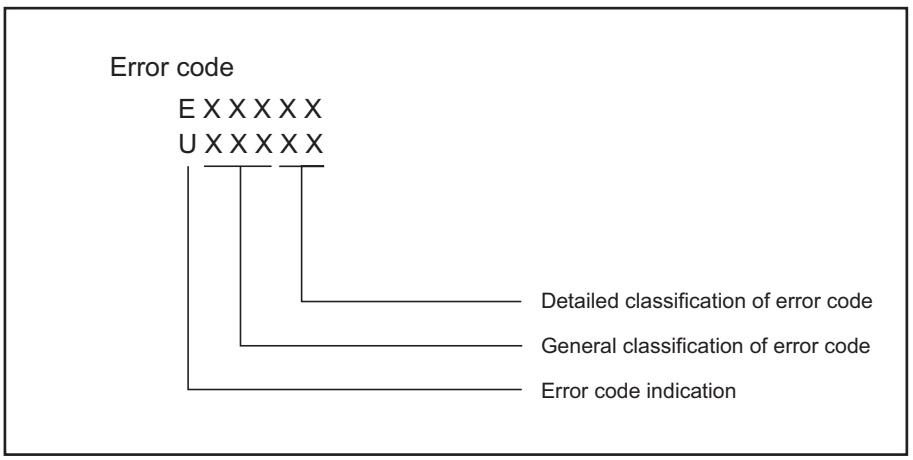

Error code

Error code	Contents
U00000/E00000	No response or busy after the set number of redials.
U00100/E00100	Transmission was interrupted by a press of the stop/clear key.
U00200/E00200	Reception was interrupted by a press of the [Stop] key.
U00300/E00300	Recording paper on the destination unit has run out during transmission.
U00430/E00430	Polling request was received but interrupted because of a mismatch in permitted number. Or, sub address-based bulletin board transmission request was received but interrupted because of a mismatch in permitted ID in the transmitting unit.
U00431/E00431	An sub address bulletin board transmission was interrupted because the specified sub address password was not registered.
U00432/E00432	A sub address bulletin board transmission was interrupted because the sub address password did not match.
U00433/E00433	A sub address bulletin board transmission request was received but data was not present in the sub address box.
U00440/E00440	Sub address confidential reception was interrupted because the specified sub address password was not registered.
U00450/E00450	The reception was interrupted because the permitted ID and FAX number did not match in the restricted transmission (password check transmission) in the destination unit.
U00460/E00460	The encryption reception was interrupted because the specified encryption box number was not registered.
U00462/E00462	Encrypted reception was interrupted because the encryption key for the specified encryption box was not registered.
U00601/E00601	Document jam or the document length exceeds the maximum.
U00613/E00613	Image writing section problem
U00656/E00656	The data was not transmitted due to an error in the modem.
U00690/E00690	System error
U00800/E00800	A page transmission error occurred because of the reception of an RTN or PIN signal.
U00811/E00811	A page reception error remained after retry of transmission in the ECM mode.
U00900/E00900	An RTN or PIN signal was transmitted because of a page reception error.
U00910/E00910	Pages were resent in ECM mode but there are some pages could not be received correctly
U01000/E01000	An FTT signal was received for a set number of times after TCF signal transmission at 2400 bps. Or, an RTN signal was received in response to a Q signal (excluding EOP) after transmission at 2400 bps.

Error code	Contents
U01001/E01001	Function as indicated by DIS signal is not consistent with the one of own machine.
U01016/E01016	T1 timeout occurs since MBF signal is received but DIS signal is not after sending EOM signal.
U01019/E01019	Command send retrial times exceeds since significant signal is not received after sending CNC signal. (between own machines)
U01020/E01020	Command send retrial times exceeds since significant signal is not received after sending CTC signal. (ECM)
U01021/E01021	Command send retrial times exceeds since significant signal is not received after sending EOR•Q signal. (ECM)
U01022/E01022	Command send retrial times exceeds since significant signal is not received after sending RR signal. (ECM)
U01028/E01028	T5 time-out was detected during ECM transmission (ECM).
U01052/E01052	DCN signal is received after sending RR signal (ECM)
U01080/E01080	PIP signal is received after sending PPS and NULL signals.
U01092/E01092	Communication is stopped since there are impossible combination of symbol speed and communication speed at V.34 sending.
U01093/E01093	A DCN or other inappropriate signal was received during phase B of transmission.
U01094/E01094	DCS/NSS signal send retrial time is exceeded at phase B during transmission.
U01095/E01095	After sending the (PPS) Q signal, the significant signal could not be received the number of command transmissions were exceeded at phase D during transmission.
U01096/E01096	DCN signal or invalid command is received at phase D during transmission.
U01097/E01097	The preset number of command retransfers was exceeded after transmission of an RR signal or no response.
U01100/E01100	Function indicated by DCS signal is not consistent with the one of own machine.
U01101/E01101	Function indicated by NSS signal except communication type is not consistent with the one of own machine.
U01102/E01102	DTC (NSC) signal is received while own machine has no transmission data.
U01110/E01110	No response is received after sending DIS signal.
U01111/E01111	No response is received after sending DTC (NSC) signal.
U01113/E01113	No response after transmitting an FTT signal.
U01125/E01125	No response after transmitting a CNS signal. (Between the units of our make)
U01129/E01129	No response after transmitting an SPA signal. (Short protocol)
U01141/E01141	DCN signal is received after sending DTC signal.
U01143/E01143	DCN signal is received after sending FTT signal.
U01155/E01155	DCN signal is received after sending SPA signal. (simplified protocol)
U01160/E01160	Maximum transmission time per line is exceeded while receiving message.
U01162/E01162	Reception was aborted due to a modem malfunction during message reception.
U01191/E01191	Communication is stopped with error during image data receipt sequence at V.34.
U01193/E01193	No response, DCN signal or invalid command is received at phase C/D during reception.
U01194/E01194	DCN signal is received at phase B during reception.
U01195/E01195	No message is received at phase C during reception.
U01196/E01196	Error line control overflow and decoding error occurred in messages during reception.
U01400/E01400	An invalid one-touch key was specified during communication.
U01500/E01500	A communication error occurred when calling in V.8 mode.
U01600/E01600	A communication error occurred when called in V.8 mode.
U01700/E01700	A communication error occurred in phase 2 (line probing).
U01720/E01720	The communication error appears at phase 4 (replacing the modem parameter).
U01721/E01721	The communication was interrupted because there is no communication speed commonly used with the destination unit.
U01800/E01800	A communication error occurred in phase 2 (line probing).
U01810/E01810	A communication error occurred in phase 3 (primary channel equivalent device training).
U01820/E01820	The communication error appears at phase 4 (replacing the modem parameter).
U01821/E01821	The communication was interrupted because there is no communication speed commonly used with the destination unit.

Error code	Contents
U03000/E03000	No document was present in the destination unit when polling reception started.
U03200/E03200	In interoffice sub address bulletin board reception, the data was not stored in the box specified by the destination unit.
U03300/E03300	In polling reception from a unit of our own model, operation was interrupted due to a mismatch in permitted ID or telephone number. Or, in interoffice sub address-based bulletin board reception, operation was interrupted due to a mismatch in permitted ID or telephone number.
U03400/E03400	Polling reception was interrupted because of a mismatch in individual numbers (destination unit is either of our make or by another manufacturer).
U03500/E03500	In interoffice sub address bulletin board reception, the specified sub address password was not registered in the destination unit.
U03600/E03600	An interoffice sub address bulletin board reception was interrupted because of a mismatch in the specified sub address password.
U03700/E03700	Interoffice sub address bulletin board reception failed because the destination unit had no sub address bulletin board transmission capability, or data was not stored in any sub address box in the destination unit.
U04000/E04000	In interoffice sub address transmission mode, the specified sub address password was not registered in the destination unit.
U04100/E04100	The destination unit had no sub address reception capability while the sub address transmission was executed.
U04200/E04200	In encrypted transmission, the specified encryption box was not registered in the destination unit.
U04300/E04300	The encryption transmission was carried out, but there is no encryption function at the other machine.
U04400/E04400	Encrypted transmission was interrupted because encryption keys did not agree.
U04500/E04500	Encrypted reception was interrupted because of a mismatch in encryption keys.
U05100/E05100	The transmission was interrupted because the permitted ID and FAX number did not match in the restricted transmission (password check transmission).
U05200/E05200	Restricted reception (Password check reception) was interrupted because the permitted FAX number / ID did not match, the rejected FAX number matched, or the destination unit did not return its phone number.
U05300/E05300	The destination unit set the restricted reception (Password check reception). Consequently, the transmission was interrupted because the permitted FAX number / ID did not match, the rejected FAX number matched, or the own unit did not return its phone number.
U14000/E14000	Memory overflowed during the sub address confidential reception.
U14100/E14100	In interoffice sub address transmission, memory overflowed in the destination unit.
U19000/E19000	Memory overflowed during memory reception.
U19100/E19100	Memory overflowed in the destination unit while transmitting the data.
U19300/E19300	Transmission failed because an error appeared during JBIG encoding.

Content of Communication Errors

U00000/E00000

Step	Check description	Assumed cause	Measures	Reference
1	Resending	The status is Busy.	Check if the destination unit can receive the data and resend the data if there is no particular problem.	

U00100/E00100

Step	Check description	Assumed cause	Measures	Reference
1	Resending	Transmission was interrupted by a press of the stop/clear key.	Resend.	

U00200/E00200

Step	Check description	Assumed cause	Measures	Reference
1	Request for resending	Reception was interrupted by a press of the [Stop] key.	Suspend resending from the destination unit or request the destination unit to resend the data.	

U00300/E00300

Step	Check description	Assumed cause	Measures	Reference
1	Request to the destination unit	Recording paper on the destination unit has run out during transmission.	Request the destination unit to set the recording papers.	

U00430/E00430

Step	Check description	Assumed cause	Measures	Reference
1	Checking the permitted number	Polling or sub address bulletin board transmission were requested, but the communication was interrupted because the permitted ID did not match. (It occurs in the transmitting unit.)	Register a valid permitted number	

U00431/E00431

Step	Check description	Assumed cause	Measures	Reference
1	Request to the destination unit	An sub address bulletin board transmission was interrupted because the specified sub address password was not registered.	Register the sub address password in the destination unit.	

U00432/E00432

Step	Check description	Assumed cause	Measures	Reference
1	Checking the sub address password	A sub address bulletin board transmission was interrupted because the sub address password did not match.	Send by using correct the sub address password.	

U00433/E00433

Step	Check description	Assumed cause	Measures	Reference
1	Checking the sub address box	A sub address bulletin board transmission request was received but data was not present in the sub address box.	Set data in the sub address box.	

U00440/E00440

Step	Check description	Assumed cause	Measures	Reference
1	Checking the sub address password	Sub address confidential reception was interrupted because the specified sub address password was not registered.	Register the sub address password.	

U00450/E00450

Step	Check description	Assumed cause	Measures	Reference
1	Checking the permitted number	The reception was interrupted because the permitted ID and FAX number did not match in the restricted transmission (password check transmission) in the destination unit.	Register the permitted number to be consistent at own machine side.	

U00460/E00460

Step	Check description	Assumed cause	Measures	Reference
1	Checking the encryption key	The encryption reception was interrupted because the specified encryption box number was not registered.	Register an encrypted box number.	

U00462/E00462

Step	Check description	Assumed cause	Measures	Reference
1	Checking the encryption key	Encrypted reception was interrupted because the encryption key for the specified encryption box was not registered.	Register an encryption key.	

U00601/E00601

Step	Check description	Assumed cause	Measures	Reference
1	Checking the original	Original jam	Clear original feed jam and resend.	
2	Checking the original	The original length exceeds the maximum allowed.	Check if the original length does not exceed 1.6 meter and resend.	

U00613/E00613

Step	Check description	Assumed cause	Measures	Reference
1	Checking the service call error record	Image writing section error	Check the service call error record and perform the corrective actions.	

U00656/E00656

Step	Check description	Assumed cause	Measures	Reference
1	Resending	Transmission was interrupted because there was an error in the modem.	Resend.	
2	Reinstalling the FAX PWB	Transmission was interrupted because there was an error in the modem.	Turn off the power switch and pull out the power plug. After passing 5s, reattach the FAX PWB and reinsert the power plug. Then, turn on the power switch.	
3	Firmware upgrade	The firmware is not the latest version.	Upgrade the fax firmware to the latest version.	
4	Initializing the fax	The FAX initial value was changed.	Execute U600 to initialize the FAX.	
5	Replacing the FAX PWB	The FAX PWB is faulty.	Replace the FAX PWB.	

U00690/E00690

Step	Check description	Assumed cause	Measures	Reference
1	Resetting the power	System error	Turn off the power switch and pull out the power plug. After passing 5s, reinsert the power plug and turn on the power switch.	
2	Measures for the system error	System error in the main unit	Perform the corrective actions for the system error in the main unit.	

U00800/E00800

Step	Check description	Assumed cause	Measures	Reference
1	Checking the transmit start speed	A page transmission error occurred because of reception of a RTN or PIN signal.	In case pages are not properly sent and resending does not solve it, reduce transmit start speed and resend the data.	

U00811/E00811

Step	Check description	Assumed cause	Measures	Reference
1	Resending	A page reception error remained after retry of transmission in the ECM mode.	In case pages are not properly sent and resending does not solve it, reduce transmit start speed and resend the data.	

U00900/E00900

Step	Check description	Assumed cause	Measures	Reference
1	Re-reception	An RTN or PIN signal was transmitted because of a page reception error.	Resend the page if there is a page not transmitted properly.	

U00910/E00910

Step	Check description	Assumed cause	Measures	Reference
1	Re-reception	Some pages cannot be received after retry of transmission in the ECM mode	Resend the page if there is a page not transmitted properly.	

U01000/E01000

Step	Check description	Assumed cause	Measures	Reference
1	Resending	An FTT signal was received for a set number of times after TCF signal transmission at 2400 bps. Or, an RTN signal was received in response to a Q signal (excluding EOP) after transmission at 2400 bps.	Resend.	
2	Checking the transmit start speed	Line condition is poor. (Destination unit)	Execute U630 [TX Speed] to reduce the transmit start speed. Then, resend the data.	
3	Changing the initial value	Line condition is poor. (Own machine)	Change the default value of the transmit start speed by executing U630 [TX Speed].	

U01001/E01001

Step	Check description	Assumed cause	Measures	Reference
1	Resending	Function as indicated by DIS signal is not consistent with the one of own machine.	Resend.	
2	Checking the transmit start speed	Line condition is poor. (Destination unit)	Execute U630 [TX Speed] to reduce the transmit start speed. Then, resend the data.	
3	Changing the initial value	Line condition is poor. (Own machine)	Change the default value of the transmit start speed by executing U630 [TX Speed].	

U01016/E01016

Step	Check description	Assumed cause	Measures	Reference
1	Resending	T1 timeout occurs since MBF signal is received but DIS signal is not after sending EOM signal.	Resend.	
2	Checking the transmit start speed	Line condition is poor. (Destination unit)	Execute U630 [TX Speed] to reduce the transmit start speed. Then, resend the data.	
3	Changing the initial value	Line condition is poor. (Own machine)	Change the default value of the transmit start speed by executing U630 [TX Speed].	

U01019/E01019

Step	Check description	Assumed cause	Measures	Reference
1	Resending	Command send retrial times exceeds since significant signal is not received after sending CNC signal. (between own machines)	Resend.	
2	Checking the transmit start speed	Line condition is poor. (Destination unit)	Execute U630 [TX Speed] to reduce the transmit start speed. Then, resend the data.	
3	Changing the initial value	Line condition is poor. (Own machine)	Change the default value of the transmit start speed by executing U630 [TX Speed].	

U01020/E01020

Step	Check description	Assumed cause	Measures	Reference
1	Resending	Command send retrial times exceeds since significant signal is not received after sending CTC signal. (ECM)	Resend.	
2	Checking the transmit start speed	Line condition is poor. (Destination unit)	Execute U630 [TX Speed] to reduce the transmit start speed. Then, resend the data.	
3	Changing the initial value	Line condition is poor. (Own machine)	Change the default value of the transmit start speed by executing U630 [TX Speed].	

U01021/E01021

Step	Check description	Assumed cause	Measures	Reference
1	Resending	Command send retrial times exceeds since significant signal is not received after sending EOR•Q signal. (ECM)	Resend.	
2	Checking the transmit start speed	Line condition is poor. (Destination unit)	Execute U630 [TX Speed] to reduce the transmit start speed. Then, resend the data.	
3	Changing the initial value	Line condition is poor. (Own machine)	Change the default value of the transmit start speed by executing U630 [TX Speed].	

U01022/E01022

Step	Check description	Assumed cause	Measures	Reference
1	Resending	Command send retrial times exceeds since significant signal is not received after sending RR signal. (ECM)	Resend.	
2	Checking the transmit start speed	Line condition is poor. (Destination unit)	Execute U630 [TX Speed] to reduce the transmit start speed. Then, resend the data.	
3	Changing the initial value	Line condition is poor. (Own machine)	Change the default value of the transmit start speed by executing U630 [TX Speed].	

U01028/E01028

Step	Check description	Assumed cause	Measures	Reference
1	Resending	T5 timeout is detected when sending in ECM (ECM)	Resend.	
2	Checking the transmit start speed	Line condition is poor. (Destination unit)	Execute U630 [TX Speed] to reduce the transmit start speed. Then, resend the data.	
3	Changing the initial value	Line condition is poor. (Own machine)	Change the default value of the transmit start speed by executing U630 [TX Speed].	

U01052/E01052

Step	Check description	Assumed cause	Measures	Reference
1	Resending	DCN signal is received after sending RR signal (ECM)	Resend.	
2	Checking the transmit start speed	Line condition is poor. (Destination unit)	Execute U630 [TX Speed] to reduce the transmit start speed. Then, resend the data.	
3	Changing the initial value	Line condition is poor. (Own machine)	Change the default value of the transmit start speed by executing U630 [TX Speed].	

U01080/E01080

Step	Check description	Assumed cause	Measures	Reference
1	Resending	PIP signal is received after sending PPS and NULL signals.	Resend.	
2	Checking the transmit start speed	Line condition is poor. (Destination unit)	Execute U630 [TX Speed] to reduce the transmit start speed. Then, resend the data.	
3	Changing the initial value	Line condition is poor. (Own machine)	Change the default value of the transmit start speed by executing U630 [TX Speed].	

U01092/E01092

Step	Check description	Assumed cause	Measures	Reference
1	Resending	Communication is stopped since there are impossible combination of symbol speed and communication speed at V.34 sending.	Resend.	
2	Checking the transmit start speed	Line condition is poor. (Destination unit)	Execute U630 [TX Speed] to reduce the transmit start speed. Then, resend the data.	
3	Changing the initial value	Line condition is poor. (Own machine)	Change the default value of the transmit start speed by executing U630 [TX Speed].	

U01093/E01093

Step	Check description	Assumed cause	Measures	Reference
1	Checking the settings	The modem is not detected since the received signal is attenuated with its frequency response.	Set the modem detection level at U650 [RX Mm Level]. (Initial setting: -43dBm)	
2	Checking the settings	The modem is not detected since the received signal is attenuated with its frequency response.	Set the G3 reception cable equalizer by executing U650 [Reg G3 RX Eqr]. (Initial value: 0dBm)	

U01094/E01094

Step	Check description	Assumed cause	Measures	Reference
1	Resending	DCS/NSS signal send retrial time is exceeded at phase B during transmission.	Resend.	
2	Checking the transmit start speed	Line condition is poor. (Destination unit)	Execute U630 [TX Speed] to reduce the transmit start speed. Then, resend the data.	
3	Changing the initial value	Line condition is poor. (Own machine)	Change the default value of the transmit start speed by executing U630 [TX Speed].	

U01095/E01095

Step	Check description	Assumed cause	Measures	Reference
1	Resending	Command send retry time is exceeded since the significant signal is not received after sending (PPS) Q signal at phase D during transmission.	Resend.	
2	Checking the transmit start speed	Line condition is poor. (Destination unit)	Execute U630 [TX Speed] to reduce the transmit start speed. Then, resend the data.	
3	Changing the initial value	Line condition is poor. (Own machine)	Change the default value of the transmit start speed by executing U630 [TX Speed].	

U01096/E01096

Step	Check description	Assumed cause	Measures	Reference
1	Resending	DCN signal or invalid command is received at phase D during transmission.	Resend.	
2	Checking the transmit start speed	Line condition is poor. (Destination unit)	Execute U630 [TX Speed] to reduce the transmit start speed. Then, resend the data.	
3	Changing the initial value	Line condition is poor. (Own machine)	Change the default value of the transmit start speed by executing U630 [TX Speed].	

U01097/E01097

Step	Check description	Assumed cause	Measures	Reference
1	Resending	The preset number of command retransfers was exceeded after transmission of an RR signal or no response.	Resend.	
2	Checking the transmit start speed	Line condition is poor. (Destination unit)	Execute U630 [TX Speed] to reduce the transmit start speed. Then, resend the data.	
3	Changing the initial value	Line condition is poor. (Own machine)	Change the default value of the transmit start speed by executing U630 [TX Speed].	

U01100/E01100

Step	Check description	Assumed cause	Measures	Reference
1	Request for resending	Function indicated by DCS signal is not consistent with the one of own machine.	Request the destination unit to resend the data.	
2	Changing the initial value	Line condition is poor. (Own machine)	Change the reception speed by executing U630 [RX Speed].	

U01101/E01101

Step	Check description	Assumed cause	Measures	Reference
1	Request for resending	Function indicated by NSS signal except communication type is not consistent with the one of own machine.	Request the destination unit to resend the data.	
2	Changing the initial value	Line condition is poor. (Own machine)	Change the reception speed by executing U630 [RX Speed].	

U01102/E01102

Step	Check description	Assumed cause	Measures	Reference
1	Request for resending	DTC (NSC) signal is received while own machine has no transmission data.	Request the destination unit to resend the data.	
2	Changing the initial value	Line condition is poor. (Own machine)	Change the reception speed by executing U630 [RX Speed].	

U01110/E01110

Step	Check description	Assumed cause	Measures	Reference
1	Request for resending	No response is received after sending DIS signal.	Request the destination unit to resend the data.	
2	Changing the initial value	Line condition is poor. (Own machine)	Change the reception speed by executing U630 [RX Speed].	

U01111/E01111

Step	Check description	Assumed cause	Measures	Reference
1	Request for resending	No response is received after sending DTC (NSC) signal.	Request the destination unit to resend the data.	
2	Changing the initial value	Line condition is poor. (Own machine)	Change the reception speed by executing U630 [RX Speed].	

U01113/E01113

Step	Check description	Assumed cause	Measures	Reference
1	Checking the settings	The modem is not detected since the received signal is attenuated with its frequency response.	Set the modem detection level at U650 [RX Mm Level]. (Initial setting: -43dBm)	
2	Checking the settings	The modem is not detected since the received signal is attenuated with its frequency response.	Set the G3 reception cable equalizer by executing U650 [Reg G3 RX Eqr]. (Initial value: 0dBm)	

U01125/E01125

Step	Check description	Assumed cause	Measures	Reference
1	Request for resending	No response is received after sending CNS signal. (between own machine)	Request the destination unit to resend the data.	
2	Changing the initial value	Line condition is poor. (Own machine)	Change the reception speed by executing U630 [RX Speed].	

U01129/E01129

Step	Check description	Assumed cause	Measures	Reference
1	Request for resending	No response after transmitting an SPA signal. (Short protocol)	Request the destination unit to resend the data.	
2	Changing the initial value	Line condition is poor. (Own machine)	Change the reception speed by executing U630 [RX Speed].	

U01141/E01141

Step	Check description	Assumed cause	Measures	Reference
1	Request for resending	DCN signal is received after sending DTC signal.	Request the destination unit to resend the data.	
2	Changing the initial value	Line condition is poor. (Own machine)	Change the reception speed by executing U630 [RX Speed].	

U01143/E01143

Step	Check description	Assumed cause	Measures	Reference
1	Checking the settings	DCN signal is received after sending FTT signal.	Set the G3 reception cable equalizer by executing U650 [Reg G3 RX Eqr]. (Initial value: 0dBm)	

U01155/E01155

Step	Check description	Assumed cause	Measures	Reference
1	Request for resending	DCN signal is received after sending SPA signal. (simplified protocol)	Request the destination unit to resend the data.	
2	Changing the initial value	Line condition is poor. (Own machine)	Change the reception speed by executing U630 [RX Speed].	

U01160/E01160

Step	Check description	Assumed cause	Measures	Reference
1	Request for resending	Maximum transmission time per line is exceeded while receiving message.	Request the destination unit to resend the data.	
2	Changing the initial value	Line condition is poor. (Own machine)	Change the reception speed by executing U630 [RX Speed].	

U01162/E01162

Step	Check description	Assumed cause	Measures	Reference
1	Request for resending	Maximum transmission time per line is exceeded while receiving message.	Request the destination unit to resend the data.	
2	Changing the initial value	Line condition is poor. (Own machine)	Change the reception speed by executing U630 [RX Speed].	

U01191/E01191

Step	Check description	Assumed cause	Measures	Reference
1	Request for resending	Communication is stopped with error during image data receipt sequence at V.34.	Request the destination unit to resend the data.	
2	Changing the initial value	Line condition is poor. (Own machine)	Change the reception speed by executing U630 [RX Speed].	

U01193/E01193

Step	Check description	Assumed cause	Measures	Reference
1	Checking the settings	No response, DCN signal or invalid command is received at phase C/D during reception.	Extend T2 time-out time at U641 [T2 Time Out]. (Change from the initial setting 69 to 150.)	
2	Checking the settings	Line condition is poor.	Set the corrective measures for echoes at the reception in U630 [RX Echo]. (Initial setting: 75)	
3	Changing the transmit start timing	Line condition is poor.	Change the reception starting speed to "9600bps" or less.	

U01194/E01194

Step	Check description	Assumed cause	Measures	Reference
1	Request for resending	DCN signal is received at phase B during reception.	Request the destination unit to resend the data.	
2	Changing the initial value	Line condition is poor. (Own machine)	Change the reception speed by executing U630 [RX Speed].	

U01195/E01195

Step	Check description	Assumed cause	Measures	Reference
1	Checking the settings	No message is received at phase C during reception.	Extend T2 time-out time at U641 [T2 Time Out]. (Change from the initial setting 69 to 150.)	
2	Checking the settings	Line condition is poor.	Set the corrective measures for echoes at the reception in U630 [RX Echo]. (Initial setting: 75)	
3	Changing the transmit start timing	Line condition is poor.	Change the reception starting speed to "9600bps" or less.	

U01196/E01196

Step	Check description	Assumed cause	Measures	Reference
1	Resending	Error line control overflow and decoding error occurred in messages during reception.	Resend.	
2	Changing the initial value	Line condition is poor. (Own machine)	Change the reception speed by executing U630 [RX Speed].	

U01400/E01400

Step	Check description	Assumed cause	Measures	Reference
1	Checking the telephone number	"#" exists in advance of "x" on the phone numbers of the destination unit, so it is processed as the invalid dial line.	Delete "#" from the registered numbers if "#" exists in advance of "x" on the phone numbers of the destination unit.	

U01500/E01500

Step	Check description	Assumed cause	Measures	Reference
1	Checking the transmit start speed	The communication line is the poor condition.	Execute U630 [TX Speed] to reduce the transmit start speed. Then, resend the data.	
2	Checking the transmit start speed	The communication line condition is poor and an error frequently occurs.	Change the default value of the transmit start speed by executing U630 [TX Speed].	

U01600/E01600

Step	Check description	Assumed cause	Measures	Reference
1	Request to the destination unit	The communication line is the poor condition.	Request the destination unit to resend the data after reducing the transmit start speed.	
2	Changing the transmit start timing	The communication line condition is poor and an error frequently occurs.	Request the destination unit to resend the data after lowering the reception start speed.	

U01700/E01700

Step	Check description	Assumed cause	Measures	Reference
1	Resending	A communication error occurred in phase 2 (line probing).	Resend.	
2	Checking the transmit start speed	Line condition is poor. (Destination unit)	Execute U630 [TX Speed] to reduce the transmit start speed. Then, resend the data.	
3	Changing the initial value	Line condition is poor. (Own machine)	Change the default value of the transmit start speed by executing U630 [TX Speed].	

U01720/E01720

Step	Check description	Assumed cause	Measures	Reference
1	Resending	The communication error appears at phase 4 (replacing the modem parameter).	Resend.	
2	Checking the transmit start speed	Line condition is poor. (Destination unit)	Execute U630 [TX Speed] to reduce the transmit start speed. Then, resend the data.	
3	Changing the initial value	Line condition is poor. (Own machine)	Change the default value of the transmit start speed by executing U630 [TX Speed].	

U01721/E01721

Step	Check description	Assumed cause	Measures	Reference
1	Resending	The communication was interrupted because there is no communication speed commonly used with the destination unit.	Resend.	
2	Checking the transmit start speed	Line condition is poor. (Destination unit)	Execute U630 [TX Speed] to reduce the transmit start speed. Then, resend the data.	
3	Changing the initial value	Line condition is poor. (Own machine)	Change the default value of the transmit start speed by executing U630 [TX Speed].	

U01800/E01800

Step	Check description	Assumed cause	Measures	Reference
1	Request for resending	A communication error occurred in phase 2 (line probing).	Request the destination unit to resend the data after reducing the transmit start speed.	
2	Changing the initial value	Line condition is poor. (Own machine)	Change the reception speed by executing U630 [RX Speed].	

U01810/E01810

Step	Check description	Assumed cause	Measures	Reference
1	Request for resending	A communication error occurred in phase 3 (primary channel equivalent device training).	Request the destination unit to resend the data after reducing the transmit start speed.	
2	Changing the initial value	Line condition is poor. (Own machine)	Change the reception speed by executing U630 [RX Speed].	

U01820/E01820

Step	Check description	Assumed cause	Measures	Reference
1	Request for resending	A communication error occurred in phase 3 (primary channel equivalent device training).	Request the destination unit to resend the data after reducing the transmit start speed.	
2	Changing the initial value	Line condition is poor. (Own machine)	Change the reception speed by executing U630 [RX Speed].	

U01821/E01821

Step	Check description	Assumed cause	Measures	Reference
1	Request for resending	The communication was interrupted because there is no communication speed commonly used with the destination unit.	Request the destination unit to resend the data after reducing the transmit start speed.	
2	Changing the initial value	Line condition is poor. (Own machine)	Change the reception speed by executing U630 [RX Speed].	

U03000/E03000

Step	Check description	Assumed cause	Measures	Reference
1	Request to the destination unit	No document was present in the destination unit when polling reception started.	Request the destination unit to set the originals.	

U03200/E03200

Step	Check description	Assumed cause	Measures	Reference
1	Request to the destination unit	There is no data in the sub address box in the main unit that are specified from the destination unit.	Request the destination unit to store the original data in the sub address box.	

U03300/E03300

Step	Check description	Assumed cause	Measures	Reference
1	Request to the destination unit	The permitted ID and FAX number registered in the destination unit are incorrect.	Request the destination unit to register the own ID and the own FAX number as the permitted ID and the permitted FAX number.	

U03400/E03400

Step	Check description	Assumed cause	Measures	Reference
1	Checking the destination unit	In polling reception, the operation was interrupted because the password input in the destination unit and the own FAX number in the receiver did not match.	Revise it so that the password input at the destination machine is consistent with the receiversownFAXIDtoreceiveagain.'	

U03500/E03500

Step	Check description	Assumed cause	Measures	Reference
1	Checking the destination unit	In polling reception, the operation was interrupted because the password input in the destination unit and the own FAX number in the receiver did not match.	Revise it so that the password input at the destination machine is consistent with the receiversownFAXIDtoreceiveagain.'	

U03600/E03600

Step	Check description	Assumed cause	Measures	Reference
1	Resending	Sub address bulletin board reception was interrupted because the specified sub address password did not match.	Resend the data after inputting the sub address password registered in the destination unit.	

U03700/E03700

Step	Check description	Assumed cause	Measures	Reference
1	Checking the destination unit	Destination machine has no sub address bulletin board communication function or no originals are stored in any original delivery box (sub address box).	Check if the destination unit has a sub address bulletin board communication function. If available, request the destination unit to save the original data in the sub address box.	

U04000/E04000

Step	Check description	Assumed cause	Measures	Reference
1	Request to the destination unit	The original was transmitted to the sub address box, but the specified box was not registered in the destination unit that is our own model.	Register the sub address password in the destination unit.	
2	Checking the sub address of the FAX transmission condition	The original was transmitted to the sub address box in the destination unit that is our own model, but the sub address of the transmission condition did not match.	Match the sub address in the FAX forward condition	

U04100/E04100

Step	Check description	Assumed cause	Measures	Reference
1	Resending	The destination unit had no sub address reception capability while the sub address transmission was executed.	Transmit the data according to the reception function in the destination unit.	

U04200/E04200

Step	Check description	Assumed cause	Measures	Reference
1	Request to the destination unit	In encrypted transmission, the specified encryption box was not registered in the destination unit.	Request the destination unit to register the encrypted box.	

U04300/E04300

Step	Check description	Assumed cause	Measures	Reference
1	Resending	The encryption transmission was carried out, but there is no encryption function at the other machine.	Transmit the data according to the reception function in the destination unit.	

U04400/E04400

Step	Check description	Assumed cause	Measures	Reference
1	Checking the encryption key	Encrypted transmission was interrupted because encryption keys did not agree.	Request resending after checking the encryption key registered in the receiving and sending machines.	

U04500/E04500

Step	Check description	Assumed cause	Measures	Reference
1	Checking the encryption key	Encrypted transmission was interrupted because encryption keys did not agree.	Request resending after checking the encryption key registered in the receiving and sending machines.	

U05100/E05100

Step	Check description	Assumed cause	Measures	Reference
1	Checking the permitted number	The transmission was interrupted because the permitted ID and FAX number did not match in the restricted transmission (password check transmission).	Resend after confirming the authorization number that has been registered.	

U05200/E05200

Step	Check description	Assumed cause	Measures	Reference
1	Checking the settings	The number does not match a permitted FAX number / ID, or it matches a rejected FAX number.	Change the restricted reception settings.	
2	Request to the destination unit	The own telephone number is not informed from the destination unit.	Request the destination unit to register the own telephone number.	

U05300/E05300

Step	Check description	Assumed cause	Measures	Reference
1	Request to the destination unit	The number does not match a permitted FAX number / ID, or it matches a rejected FAX number.	Ask the destination unit to change the restricted reception settings.	
2	Request to the destination unit	The main unit did not acknowledge its phone number in question .	Request the destination unit to register the own telephone number.	

U14000/E14000

Step	Check description	Assumed cause	Measures	Reference
1	Checking the memory	The reception to the FAX box was interrupted due to memory overflow in its unit.	Print documents stored in memory and make room in memory. Or stop receiving in the FAX box.	

U14100/E14100

Step	Check description	Assumed cause	Measures	Reference
1	Request to the destination unit	Transmission was interrupted due to the memory overflow in the destination unit when transmitting into the sub address box.	Request the destination unit to release memory.	

U19000/E19000

Step	Check description	Assumed cause	Measures	Reference
1	Checking the memory	The reception was interrupted due to the memory overflow in the main unit during memory reception.	Release memory by printing originals stored in memory.	

U19100/E19100

Step	Check description	Assumed cause	Measures	Reference
1	Resending	The transmission was interrupted because there is an error in the data during transmission.	Resend.	
2	Reinstalling the FAX PWB	The transmission was interrupted because there is an error in the data during transmission.	Turn off the power switch and pull out the power plug. After passing 5s, reattach the FAX PWB and reinsert the power plug. Then, turn on the power switch.	

U19300/E19300

Step	Check description	Assumed cause	Measures	Reference
1	Resending	The transmission was interrupted because there is an error in the data during transmission.	Resend.	
2	Reinstalling the FAX PWB	The transmission was interrupted because there is an error in the data during transmission.	Turn off the power switch and pull out the power plug. After passing 5s, reattach the FAX PWB and reinsert the power plug. Then, turn on the power switch.	
3	Firmware upgrade	The firmware is not the latest version.	Upgrade the fax firmware to the latest version.	
4	Initializing the fax	The FAX initial value was changed.	Execute U600 to initialize the FAX.	
5	Replacing the FAX PWB	The FAX PWB is faulty.	Replace the FAX PWB.	

7 - 5 Send Related Errors

(1)Send Related Errors

No.	Contents
(1)	The sending error 2101 does not disappear even if changing the host name or the security software settings
(2)	Sending error 2203 does not disappear
(3)	When scanning the original loaded on the contact glass to send,the scanned data is automatically sent.

Content of Send Related Errors

(1-1)The sending error 2101 does not disappear even if changing the host name or the security software settings

Step	Check description	Assumed cause	Measures	Reference
1	Changing the setting	The incorrect port number has been set.	Change the SMB port number from "139" to "445".	

(1-2)Sending error 2203 does not disappear

Step	Check description	Assumed cause	Measures	Reference
1	Changing the setting	The Windows Fire Wall is not properly set. (Windows Vista / 7 / 8)	Open [Control panel] > [System and Security] > Windows firewall] and select [Permit the program or function through Windows firewall].Check [Share files and printers] and the check box on the right as well.	
2	Changing the setting	The Fire Wall of the security software is not properly set.	Set [File and Printer Sharing] on the firewall of the security software correctly.	

(1-3)When scanning the original loaded on the contact glass to send,the scanned data is automatically sent.

Step	Check description	Assumed cause	Measures	Reference
1	Changing the setting	[Continuous Scan] is not set to [On].	Select [On] in [Application / Others] > [Continuous loading] in the global navigation.	
2	Changing the function defaults	[Continuous Scan] is not set to [On].	Select [On] from [Function Settings] > [default Function] > [Send / Save] > [Continuous Scan (Send / Save)] or [Continuous Scan (Fax)] in the system menu.	

(2)Sending Errors (Error Codes)

(2-1)Scan to E-mail Error Codes

Error code	Contents
Scan to E-mail error code: 1101	SMTP/POP3 server does not exist on the network.
Scan to E-mail error code: 1102	Login to the SMTP/POP3 server has failed.
Scan to E-mail error code: 1104	Destination address domain is restricted and transmission is denied.
Scan to E-mail error code: 1105	SMTP protocol is invalid.
Scan to E-mail error code: 1106	The sender address is not set.
Scan to E-mail error code: 2101	Connection to the SMTP/POP3 server has failed.
Scan to E-mail error code: 2102	Connection to the SMTP/POP3 server has failed. (Connection timeout)
Scan to E-mail error code: 2103	The server cannot establish communication.
Scan to E-mail error code: 2201	Communication to the SMTP/POP3 server has failed.
Scan to E-mail error code: 2202	Communication to the SMTP/POP3 server has failed. (Connection timeout)
Scan to E-mail error code: 2204	The size of scanning exceeded its limit.
Scan to E-mail error code: 3101	SMTP/POP3 server responded with an error.
Scan to E-mail error code: 3102	SMTP server responded with an error
Scan to E-mail error code: 3201	No SMTP authentication is found.
Scan to E-mail error code: 4803	Failed to establish the SSL session.

Content of Scan to E-mail Error Codes

Scan to E-mail error code: 1101

SMTP/POP3 server does not exist on the network.

Step	Check description	Assumed cause	Measures	Reference
1	Changing the setting	SMTP / POP3 server name is incorrect.	Correct the SMTP / POP3 server name at [Function Settings] > [E-mail] via the command center.	
2	Changing the setting	The network settings are incorrect.	Correct the settings in the Network Settings via the Command Center.	
3	Changing the setting	The network settings that the main unit is connected to are incorrect.	Correct the network settings that the main unit is connected to.	

Scan to E-mail error code: 1102

Login to the SMTP/POP3 server has failed.

Step	Check description	Assumed cause	Measures	Reference
1	Changing the setting	The user name or the password is incorrect.	Correct the SMTP / POP3 user name or password at [Function Settings] > [E-mail] via the command center.	
2	Changing the setting	The SMTP/POP3 server settings are incorrect.	Correct the protocol in the Network Settings via the Command Center.	

Scan to E-mail error code: 1104

Destination address domain is restricted and transmission is denied.

Step	Check description	Assumed cause	Measures	Reference
1	Changing the setting	Destination address domain is restricted and transmission is denied.	Correct the settings in the Network Settings via the Command Center.	

Scan to E-mail error code: 1105

SMTP protocol is invalid.

Step	Check description	Assumed cause	Measures	Reference
1	Checking the settings	SMTP protocol is invalid.	Correct the protocol in the Network Settings via the Command Center.	

Scan to E-mail error code: 1106

The sender address is not set.

Step	Check description	Assumed cause	Measures	Reference
1	Changing the setting	The sender address is not set.	Correct the protocol in the Network Settings via the Command Center.	

Scan to E-mail error code: 2101

Connection to the SMTP/POP3 server has failed.

Step	Check description	Assumed cause	Measures	Reference
1	Changing the setting	SMTP / POP3 server name is incorrect.	Correct the SMTP / POP3 server name at [Function Settings] > [E-mail] via the command center.	
2	Connecting the LAN cable	The LAN cable is not connected to the main unit.	Connect the LAN cable to the main unit.	
3	Changing the setting	The port number is incorrect.	Correct the SMTP/POP3 port number.	
4	Changing the setting	The network settings are incorrect.	Correct the settings in the Network Settings via the Command Center.	
5	Changing the setting	The network settings that the main unit is connected to are incorrect.	Correct the network settings that the main unit is connected to.	
6	Changing the setting	The SMTP/POP3 server settings are incorrect.	Correct the protocol in the Network Settings via the Command Center.	

Scan to E-mail error code: 2102

Connection to the SMTP/POP3 server has failed. (Connection timeout)

Step	Check description	Assumed cause	Measures	Reference
1	Changing the setting	SMTP / POP3 server name is incorrect.	Correct the SMTP / POP3 server name at [Function Settings] > [E-mail] via the command center.	
2	Changing the setting	The port number is incorrect.	Correct the SMTP/POP3 port number.	
3	Changing the setting	The network settings are incorrect.	Correct the settings in the Network Settings via the Command Center.	
4	Changing the setting	The network settings that the main unit is connected to are incorrect.	Correct the network settings that the main unit is connected to.	
5	Changing the setting	The SMTP/POP3 server settings are incorrect.	Correct the protocol in the Network Settings via the Command Center.	

Scan to E-mail error code: 2103

The server cannot establish communication.

Step	Check description	Assumed cause	Measures	Reference
1	Checking the SMTP/POP3 server name	SMTP / POP3 server name is incorrect.	Correct the SMTP / POP3 server name at [Function Settings] > [E-mail] via the command center.	
2	Checking the SMTP/POP3 port No.	The port number is incorrect.	Correct the SMTP/POP3 port number.	
3	Checking the settings	The network settings are incorrect.	Correct the settings in the Network Settings via the Command Center.	
4	Checking the settings	The network settings that the main unit is connected to are incorrect.	Correct the network settings that the main unit is connected to.	
5	Checking the settings	The SMTP/POP3 server settings are incorrect.	Correct the protocol in the Network Settings via the Command Center.	

Scan to E-mail error code: 2201

Communication to the SMTP/POP3 server has failed.

Step	Check description	Assumed cause	Measures	Reference
1	Changing the setting	The network settings are incorrect.	Correct the settings in the Network Settings via the Command Center.	
2	Changing the setting	The network settings that the main unit is connected to are incorrect.	Correct the network settings that the main unit is connected to.	

Scan to E-mail error code: 2202

Communication to the SMTP/POP3 server has failed. (Connection timeout)

Step	Check description	Assumed cause	Measures	Reference
1	Changing the setting	The network settings are incorrect.	Correct the settings in the Network Settings via the Command Center.	
2	Changing the setting	The network settings that the main unit is connected to are incorrect.	Correct the network settings that the main unit is connected to.	

Scan to E-mail error code: 2204

The size of scanning exceeded its limit.

Step	Check description	Assumed cause	Measures	Reference
1	Changing the setting	The network settings are incorrect.	Correct the settings in the Network Settings via the Command Center.	

Scan to E-mail error code: 3101

SMTP/POP3 server responded with an error.

Step	Check description	Assumed cause	Measures	Reference
1	Changing the setting	The network settings are incorrect.	Correct the settings in the Network Settings via the Command Center.	
2	Changing the setting	The network settings that the main unit is connected to are incorrect.	Correct the network settings that the main unit is connected to.	
3	Changing the setting	The SMTP/POP3 server settings are incorrect.	Correct the protocol in the Network Settings via the Command Center.	

Scan to E-mail error code: 3102

SMTP server responded with an error.

Step	Check description	Assumed cause	Measures	Reference
1	Changing the setting	The server is temporarily unavailable.	Check the server properly operates. If it does not operate properly,Please try again later.	

Scan to E-mail error code: 3201

No SMTP authentication is found.

Step	Check description	Assumed cause	Measures	Reference
1	Changing the setting	The SMTP server settings are incorrect.	Set the correct SMTP Authentication Protocol at [Function Settings] > [E-mail] via the command center.	

Scan to E-mail error code: 4803

Failed to establish the SSL session.

Step	Check description	Assumed cause	Measures	Reference
1	Changing the setting	The self-signed certificate of the device is incorrect.	Correct the certificates in the Security Settings via the Command Center.	
2	Changing the setting	The service certificate settings are incorrect.	Correct the certificates in the Security Settings via the Command Center.	
3	Changing the setting	The SMTP/POP3 settings are incorrect.	Correct the protocol in the Network Settings via the Command Center.	

(2-2)Scan to FTP Error Codes

Error code	Contents
Scan to FTP error code: 1101	FTP server does not exist on the network.
Scan to FTP error code: 1102	Login to the FTP server has failed.
Scan to FTP error code: 1103	The folder path to the FTP server or the folder name is incorrect.
Scan to FTP error code: 1105	FTP protocol is not enabled.
Scan to FTP error code: 1131	Initializing TLS has failed.
Scan to FTP error code: 1132	TLS negotiation has failed.
Scan to FTP error code: 1133	The server certificate has expired.
Scan to FTP error code: 1134	The server certificate authentication algorithm is not accepted.
Scan to FTP error code: 2101	Connection to the FTP server has failed.
Scan to FTP error code: 2102	Connection to the FTP server has failed. (Timeout)
Scan to FTP error code: 2103	The FTP server is in a state where communication is not possible.
Scan to FTP error code: 2201	Communication with the FTP server has failed.
Scan to FTP error code: 2202	Communication with the FTP server has failed. (Timeout)
Scan to FTP error code: 2203	There is no response from the FTP server for more than a certain period of time.
Scan to FTP error code: 2231	Communication with the FTP server has failed. (FTPS communication)
Scan to FTP error code: 3101	FTP server responded with an error.

Content of Scan to FTP Error Codes

Scan to FTP error code: 1101

FTP server does not exist on the network.

Step	Check description	Assumed cause	Measures	Reference
1	Correcting the FTP host name	The FTP host name is incorrect.	Correct the FTP host name via the Command Center.	
2	Changing the setting	The network settings are incorrect.	Correct the settings in the Network Settings via the Command Center.	
3	Changing the setting	The network settings that the main unit is connected to are incorrect.	Correct the network settings that the main unit is connected to.	

Scan to FTP error code: 1102

Login to the FTP server has failed.

Step	Check description	Assumed cause	Measures	Reference
1	Correcting the user name or the password	The user name or the password is incorrect.	Correct the user name and the password.	
2	Changing the setting	FTP server is improper.	Correct the protocol in the Network Settings via the Command Center.	

Scan to FTP error code: 1103

The folder path to the FTP server or the folder name is incorrect.

Step	Check description	Assumed cause	Measures	Reference
1	Correcting the user name or the password	The user name or the password is incorrect.	Correct the user name and the password.	
2	Changing the setting	The folder that is not allowed to access is set to connect. Invalid folder path is entered.	Please set the access right and enter the correct folder path so that you can read / write the destination folder.	
3	Changing the setting	FTP server is improper.	Correct the protocol in the Network Settings via the Command Center.	

Scan to FTP error code: 1105

FTP protocol is not enabled.

Step	Check description	Assumed cause	Measures	Reference
1	Changing the setting	FTP protocol is not enabled.	Correct the protocol in the Network Settings via the Command Center.	

Scan to FTP error code: 1131

Initializing TLS has failed.

Step	Check description	Assumed cause	Measures	Reference
1	Changing the setting	The security settings of the device are incorrect.	Correct the settings in the Security Settings via the Command Center.	

Scan to FTP error code: 1132

TLS negotiation has failed.

Step	Check description	Assumed cause	Measures	Reference
1	Changing the setting	The security settings of the device are incorrect.	Correct the settings in the Security Settings via the Command Center.	
2	Changing the setting	The FTP server settings are incorrect.	Correct the protocol in the Network Settings via the Command Center.	

Scan to FTP error code: 1133

The server certificate has expired.

Step	Check description	Assumed cause	Measures	Reference
1	Checking the device	There is an error in the date and time of the device.	Check the date and time of your device and set the correct date and time.	
2	Checking the time setting	The time settings on Windows and the device do not match.	Match the time settings on your Windows and your device.	
3	Checking server certificate	The server certificate has expired.	Ask the user for the following actions. Checking the expiration date of the server certificate. If it has expired,change to a valid server certificate.	

Scan to FTP error code: 1134

The server certificate authentication algorithm is not accepted.

Step	Check description	Assumed cause	Measures	Reference
1	Changing the setting	The server certificate authentication algorithm is not accepted.	Ask the user for the following actions. Check security settings Change security settings as needed	

Scan to FTP error code: 2101

Connection to the FTP server has failed.

Step	Check description	Assumed cause	Measures	Reference
1	Correcting the FTP host name	The FTP host name is incorrect.	Correct the FTP host name via the Command Center.	
2	Checking the LAN cable	The LAN cable is not connected to the main unit.	Connect the LAN cable to the main unit.	
3	Correcting the FTP port no.	The port number is incorrect.	Correct the FTP port number.	
4	Changing the setting	The network settings are incorrect.	Correct the settings in the Network Settings via the Command Center.	
5	Changing the setting	The FTP server settings are incorrect.	Correct the protocol in the Network Settings via the Command Center.	

Scan to FTP error code: 2102

Connection to the FTP server has failed. (Timeout)

Step	Check description	Assumed cause	Measures	Reference
1	Correcting the FTP host name	The FTP host name is incorrect.	Correct the FTP host name via the Command Center.	
2	Correcting the FTP port no.	The port number is incorrect.	Correct the FTP port number.	
3	Changing the setting	The network settings are incorrect.	Correct the settings in the Network Settings via the Command Center.	
4	Changing the setting	The network settings that the main unit is connected to are incorrect.	Correct the network settings that the main unit is connected to.	
5	Changing the setting	The FTP server settings are incorrect.	Correct the protocol in the Network Settings via the Command Center.	

Scan to FTP error code: 2103

The FTP server is in a state where communication is not possible.

Step	Check description	Assumed cause	Measures	Reference
1	Correcting the FTP host name	The FTP host name is incorrect.	Correct the FTP host name via the Command Center.	
2	Correcting the FTP port no.	The port number is incorrect.	Correct the FTP port number.	
3	Changing the setting	The network settings are incorrect.	Correct the settings in the Network Settings via the Command Center.	
4	Changing the setting	The network settings that the main unit is connected to are incorrect.	Correct the network settings that the main unit is connected to.	
5	Changing the setting	The FTP server settings are incorrect.	Correct the protocol in the Network Settings via the Command Center.	

Scan to FTP error code: 2201

Communication with the FTP server has failed.

Step	Check description	Assumed cause	Measures	Reference
1	Changing the setting	The network settings are incorrect.	Correct the settings in the Network Settings via the Command Center.	
2	Changing the setting	The network settings that the main unit is connected to are incorrect.	Correct the network settings that the main unit is connected to.	
3	Correcting the destination folder name	The destination folder name is incorrect.	Set the correct destination folder.	
4	Changing the setting	The FTP server settings are incorrect.	Correct the protocol in the Network Settings via the Command Center.	

Scan to FTP error code: 2202

Communication with the FTP server has failed. (Timeout)

Step	Check description	Assumed cause	Measures	Reference
1	Changing the setting	The network settings are incorrect.	Correct the settings in the Network Settings via the Command Center.	
2	Changing the setting	The network settings that the main unit is connected to are incorrect.	Correct the network settings that the main unit is connected to.	

Scan to FTP error code: 2203

There is no response from the FTP server for more than a certain period of time.

Step	Check description	Assumed cause	Measures	Reference
1	Changing the setting	The network settings are incorrect.	Correct the settings in the Network Settings via the Command Center.	
2	Changing the setting	The network settings that the main unit is connected to are incorrect.	Correct the network settings that the main unit is connected to.	

Scan to FTP error code: 2231

Communication with the FTP server has failed. (FTPS communication)

Step	Check description	Assumed cause	Measures	Reference
1	Changing the setting	The network settings are incorrect.	Correct the settings in the Network Settings via the Command Center.	
2	Changing the setting	The network settings that the main unit is connected to are incorrect.	Correct the network settings that the main unit is connected to.	

Scan to FTP error code: 3101

FTP server responded with an error.

Step	Check description	Assumed cause	Measures	Reference
1	Changing the setting	The network settings are incorrect.	Correct the settings in the Network Settings via the Command Center.	
2	Changing the setting	The network settings that the main unit is connected to are incorrect.	Correct the network settings that the main unit is connected to.	
3	Changing the setting	The FTP server settings are incorrect.	Correct the protocol in the Network Settings via the Command Center.	

(2-3)Scan to SMB Error Codes

Error code	Contents
Scan to SMB error code: 1101	Destination host does not exist on the network.
Scan to SMB error code: 1102	Login to the host has failed.
Scan to SMB error code: 1103	Destination host, folder, and/or file names are invalid.
Scan to SMB error code: 1105	SMB protocol is not enabled.
Scan to SMB error code: 2101	Login to the host has failed.
Scan to SMB error code: 2201	Writing scanned data has failed.
Scan to SMB error code: 2203	No response from the host during a specific period of time.

Content of Scan to SMB Error Codes

Scan to SMB error code: 1101

Destination host does not exist on the network.

Step	Check description	Assumed cause	Measures	Reference
1	Correcting the destination host name	The destination host name is incorrect.	Correct the destination host name. Changing to an IP address may resolve the issue.	
2	Changing the setting	The network settings are incorrect.	Correct the settings in the Network Settings via the Command Center.	
3	Changing the setting	The network settings that the main unit is connected to are incorrect.	Correct the network settings that the main unit is connected to.	

Scan to SMB error code: 1102

Login to the host has failed.

Step	Check description	Assumed cause	Measures	Reference
1	Correcting the user name and the password	The user name or the password is incorrect.	Correct the user name and the password.	
2	Changing the setting	The network settings are incorrect.	Correct the settings in the Network Settings via the Command Center.	
3	Changing the setting	[Network Discovery] and [File and Printer Sharing] are not set to [Enabled].	Set [Network Discovery] and [File and Printer Sharing] to [Enabled].	
4	Changing the setting	The sharing settings of the destination host or destination folder are incorrect.	Correct the sharing settings of the destination host and destination folder. Set the access right so that the destination folder can be read / written.	

Scan to SMB error code: 1103

The destination host or destination folder is invalid

Step	Check description	Assumed cause	Measures	Reference
1	Modifying the destination host name or destination folder name	The destination host name or destination folder name contains invalid characters. Or it doesntfollowthenamingconvention.'	If the destination host name or destination folder name contains invalid characters or does not follow the naming convention, correct it.	
2	Changing folder path	The destination folder has been moved.	Please move the destination folder back to its original location. Or, enter the destination folder path.	
3	Changing the setting	The destination host or the destination folder is not set properly.	Set the destination host and destination folder correctly. Set the access right so that the destination folder can be read / written.	

Scan to SMB error code: 1105

SMB protocol is not enabled.

Step	Check description	Assumed cause	Measures	Reference
1	Changing the setting	The settings of the SMP protocol are incorrect.	Correct the protocol in the Network Settings via the Command Center.	

Scan to SMB error code: 2101

Login to the host has failed.

Step	Check description	Assumed cause	Measures	Reference
1	Correcting the destination host name	The destination host name is incorrect.	Correct the destination host name.	
2	Checking the LAN cable	The LAN cable is not connected to the main unit in the transmission (Scan to SMB).	Connect the LAN cable to the main unit.	
3	Correcting the SMB port no.	The port number is incorrect.	Correct the SMB port number.	
4	Changing the setting	The network settings are incorrect.	Correct the settings in the Network Settings via the Command Center.	
5	Changing the setting	The network settings that the main unit is connected to are incorrect.	Correct the network settings that the main unit is connected to.	

Scan to SMB error code: 2201

Writing scanned data has failed.

Step	Check description	Assumed cause	Measures	Reference
1	Changing the setting	The network settings are incorrect.	Correct the settings in the Network Settings via the Command Center.	
2	Changing the setting	The network settings that the main unit is connected to are incorrect.	Correct the network settings that the main unit is connected to.	

Scan to SMB error code: 2203

No response from the host during a specific period of time.

Step	Check description	Assumed cause	Measures	Reference
1	Changing the setting	The network settings are incorrect.	Correct the settings in the Network Settings via the Command Center.	
2	Changing the setting	The network settings that the main unit is connected to are incorrect.	Correct the network settings that the main unit is connected to.	
3	Checking the LAN cable	The LAN cable is not connected to the main unit in the transmission (Scan to SMB).	Connect the LAN cable to the main unit.	

7 - 6 Print Errors

No.	Contents	Condition
(1)	The paper loading message appears	
(2)	Orientation is different	
(3)	Paper is fed from the MP tray	The main unit MP tray setting is wrong
(4)	Garbled characters	The printer driver was not properly installed.
(5)	Paper is not fed from the MP tray	The media types of each paper source defined in the printer driver and the main unit are mismatched.
(6)	The same data is repeatedly printed out	A PC (spooler) does not properly operate.
(7)	PC window shows "Print job error","Standby" or "Printer unavailable" is indicated on the printer properties	The main unit is not ready to print
(8)	Processing and Memory lamps are lit while the printer standby message is indicated	The main unit locks up.
(9)	Data is not printed out in Sleep mode due to the main unit startup error. Processing/Memory lamp is turned on	The main unit locks up.
(10)	Print stops after printing several pages and locks up. Processing and Memory lamps on operation panel are lit	The image processing fails due to the insufficient memory, so the main unit locks up.
(11)	Print out is not available from the network factor (1)	The network has some troubles or the network setting is incorrect.
(12)	Print out is not available from the network factor (2)	The cable between the main unit and the PC is not properly connected.
(13)	Print out is not available from the network factor (3)	The access point (router or HUB) in the network does not operate properly.
(14)	Print out is not available from the network factor (4)	The router is faulty, or the router settings are incorrect.
(15)	Print out is not available from the network factor (5)	Offline' appears and the print function is unavailable.
(16)	Print out is not available from the network factor (6)	Only 1 PC can't print out of all PCs installed. There is no error indication and print job will be held if print instruction is requested.
(17)	Print out is not available from the network factor (7)	The main unit IP address is changed.
(18)	Print out is not available from the printer driver setting factor (1)	[Not connected] is displayed on PC and print job can't be performed due to the error. (Can't print)
(19)	Print out is not available from the printer driver setting factor (2)	[Preparing the printer] is displayed on the operation panel. The printing document is not output and the job is held.
(20)	Print out is not available from the printer driver setting factor (3)	A PC does not recognize the main unit.
(21)	Print out is not available from the printer driver setting factor (4)	PC operation does not stabilize.
(22)	Print out is not available from the printer driver setting factor (5)	Check if the issue occurs when printing the data from all PCs in the network or from a certain PC. Then, print out the data from another PC if it occurs at a certain PC.
(23)	Print out is not available from the printer driver setting factor (6)	The incorrect printer driver was selected.
(24)	Data is not printed out due to the printer driver setting (7)	Installed printer driver shows 'Deleting' and it remains when reinstalling it
(25)	The printed image is partly missing	The image data processing with a certain application (Excel, PDF) is faulty.
(26)	"Paper Mismatch Error" appears	The paper size is not detected properly.

Content of Print Errors

(1)The paper loading message appears

Step	Check description	Assumed cause	Measures	Reference
1	Checking the paper	The size of the loaded paper did not match the paper size set in the printer properties.	Load the paper of the paper size defined at "Paper size" in the [Basic] tab in the print settings at the PC to the cassette.	
2	Checking the paper size	The paper size on the operation panel and the one set for the paper source do not match.	Check if the paper size on the operation panel and the one set for the paper source do not match	
3	Relocating the paper width guides	The locations of the paper width guides do not fit with the paper size.	Relocate the paper width guides to fit them with the paper size.	
4	Checking the actuator and the spring	The actuator or the spring for paper sensor does not operate properly.	Reattach the actuator and the spring for the paper sensor. If not repaired,replace them.	
5	Checking the situation	The print data generated by a certain application (Word) is faulty.	Check if the print data not generated by a certain application (Word) is output properly. And then,change the application setting if necessary.	
6	Changing the setting	Paper orientation is not properly set in the print page setting on a certain application (Word).	Check the page orientation with preview before printing and reset the page orientation at the print setting on a certain application (Word).	
7	Checking the settings	The paper size and the media type detected at the main unit did not match with the paper size and the media type set in the printer driver.	Check if the paper size detected on the MP tray and the media type of the MP tray set via the System Menu (for the main unit) matched to the paper size and the media type at [Imaging] > [Basic] in the printer properties at the PC.	
8	Changing the setting	The MP tray setting does not match between the main unit and printer driver	Select "MP tray" at [Source] in the [Basic] tab in the print settings at the PC.	

(2)Orientation is different

Step	Check description	Assumed cause	Measures	Reference
1	Checking the paper size	Paper same as the output size is not set in the paper source.	Check on the operation panel whether paper of the same size as the output paper size selected on the printer driver side is loaded ([Home] key > [Device Information] > [Consumables / Paper]). If it is not set,load the paper in one of the paper feed stages and specify it as the paper feed source.	
2	(When feeding from MP tray) Resetting the MP paper width guides	Paper is not properly set at the MP tray.	Pull out the sub tray from the manual tray,set the MP paper width guide according to the paper width,and then check that the paper size is displayed properly on the operation panel ([Home] key > [Device Information] > [Consumables / Paper]). If the paper size is not displayed properly,proceed to the next step "Checking the actuator". If it is displayed correctly,proceed to step 5 "Change settings".	
3	Checking the actuator	Paper size is not detected properly .	Reattach the actuators for the paper width sensor and the paper length sensor in the paper source.	
4	Checking the sensor	Paper size is not detected properly .	Check the paper width sensor and the paper length sensor in the paper source,and reattach them if they come off.	
5	Changing the setting	The printer driver is not set correctly.	Set "Orientation" properly at the [Basic setting] of the printer driver.	
6	Reinstalling the printer driver	The printer driver was not properly installed.	Uninstall and reinstall the printer driver.	
7	Checking the print setting at the application software side	The print setting at the application software side has the priority.	Set the print setting at the application software side properly.	

(3)Paper is fed from the MP tray

The main unit MP tray setting is wrong

Step	Check description	Assumed cause	Measures	Reference
1	Changing the setting	Automatic cassette switching is set to On.	Change the cassette automatic switching setting to [Off] so that if there is no paper in the selected cassette,the paper will not be fed. (Set [Function Settings] > [Printers] > [Automatic Cassette Switching] to [Off] in the system menu.)	
2	Changing the setting	"Media type" in the [Basic] tab in the print settings at the PC differs from the media type of the cassette that is set in the main unit.	Check the media type set on the main unit cassette and MP tray and set the media type for the main unit in the [Basic] tab in the print settings at the PC.	
3	Changing the setting	The same media type is set between the main unit cassette and MP tray	Set different media types between the main unit cassette and MP tray	

(4)Garbled characters

The printer driver was not properly installed.

Step	Check description	Assumed cause	Measures	Reference
1	Resetting the power	There is a communication error.	Make sure that there are no jobs being processed on the PC or machine,turn off the power switch,and unplug the power plug. After 5 seconds,reconnect the power plug and turn on the power switch.	
2	Checking the font list	Font for special data is not resident.	After checking output from Excel and Word is normal,print the font list to check if a font for special data is resident.	
3	Selecting the bitmap font	The bitmap font (default setting) is unselected.	Select the bitmap font (default setting) and print the data.	
4	Checking the printer driver	The printer driver is faulty.	Uninstall and reinstall the printer driver.	

(5)Paper is not fed from the MP tray

The media types of each paper source defined in the printer driver and the main unit are mismatched.

Step	Check description	Assumed cause	Measures	Reference
1	Checking the settings	The paper size and the media type detected at the main unit did not match with the paper size and the media type set in the printer driver.	Check if the paper size detected on the MP tray and the media type of the MP tray set via the System Menu (for the main unit) matched to the paper size and the media type at [Imaging] > [Basic] in the printer properties at the PC.	
2	Changing the setting	The MP tray setting does not match between the main unit and printer driver	Select "MP tray" at [Source] in the [Basic] tab in the print settings at the PC.	

(6)The same data is repeatedly printed out

A PC (spooler) does not properly operate.

Step	Check description	Assumed cause	Measures	Reference
1	Deleting the job	The generated data is faulty.	Delete the print job spooled in the PC and print it out again.	

(7)PC window shows "Print job error","Standby" or "Printer unavailable" is indicated on the printer properties

The main unit is not ready to print

Step	Check description	Assumed cause	Measures	Reference
1	Clearing the error	The main unit is not ready to print	Check if the error appears on the operation panel or the error lamp blinks. Then if there is,cancel it.	
2	Checking the main unit	The main unit is not ready to print	Resolve the problem at the main unit if any	

(8)Processing and Memory lamps are lit while the printer standby message is indicated

The main unit locks up.

Step	Check description	Assumed cause	Measures	Reference
1	Clearing the error	The main unit is not ready to print	After confirming no error is indicated on the main unitsoperationpanel,cancelallPCprintjobs.Then,turnoffthepowerswitchandunplugthepowercord.Afterpassing5s,reconnectthepowercordandturnonthepowerswitch.'	

(9)Data is not printed out in Sleep mode due to the main unit startup error. Processing/ Memory lamp is turned on

The main unit locks up.

Step	Check description	Assumed cause	Measures	Reference
1	Firmware upgrade	The firmware is not the latest version.	Upgrade the firmware to the latest version.	
2	Changing the setting	The sleep level is not set to Quick Recovery mode.	Turn off the power switch and pull out the power plug. After passing 5s,reinsert the power plug and turn on the power switch. Then,set [Quick Recovery] in the Sleep Level setting.	

(10)Print stops after printing several pages and locks up. Processing and Memory lamps on operation panel are lit

The image processing fails due to the insufficient memory, so the main unit locks up.

Step	Check description	Assumed cause	Measures	Reference
1	Checking the situation	The data processing in a certain PC is faulty.	Check if the issue occurs when printing the data from all PCs in the network or from a certain PC. Then,print out the data from another PC if it occurs at a certain PC.	
2	Checking the situation	The application is not properly set.	Check if a problem occurring from a certain application and file (big data like CAD data) and change application setting and refer to applicationshelp.'	
3	Firmware upgrade	The firmware is not the latest version.	Upgrade the main firmware to the latest version.	
4	Deleting the job	Processing fails.	Cancel the job in process and reprint in the main unit job status	
5	Memory allocation	Memory allocation is insufficient.	If the processing memory at the main unit is not enough,set to allocate the memory at U340 [Adj Memory].	
6	Resetting the power	The main unit locks up.	Turn off the power switch and pull out the power plug. After passing 5s,reinsert the power plug and turn on the power switch.	

(11)Print out is not available from the network factor (1)

The network has some troubles or the network setting is incorrect.

Step	Check description	Assumed cause	Measures	Reference
1	Checking the network	There is trouble in the network.	Check if the memory LED on the operation panel of the main unit is blinking after printing out from the PC. If not blinking,cancel the processing job and reprint out.	
2	Checking the network	There is trouble in the network.	When the printing error appears on the operation panel or the PC screen,clear the error caused by the toner or paper jam,etc.	
3	Checking the network	There is trouble in the network.	Check the main unit IP Address in the status page,etc. and then check if Command Center can be opened using that IP Address. If not,reconfigure the network again.	
4	Checking the network	There is trouble in the network.	Check the internet connection and restore the network connection if necessary	
5	Checking the network	There is trouble in the network.	Check the cable and reset the router or HUB.	
6	Restarting up	The PC or the main unit locks up.	Restart the PC or the main unit,and print out again.	

(12)Print out is not available from the network factor (2)

The cable between the main unit and the PC is not properly connected.

Step	Check description	Assumed cause	Measures	Reference
1	Checking the cable	The cable between the main unit and the PC is not properly connected.	Check the cable connection between the main unit and the PC.	
2	Restarting up	The main unit or the PC does not properly start up.	Restart the main unit and then restart the PC.	
3	Checking the Ethernet cable	The Ethernet cable is faulty.	Replace the Ethernet cable.	
4	Changing the connection	Another network is faulty.	Directly connect the main unit to the PC with the cross cable and then check if the same data can be printed out.	

(13)Print out is not available from the network factor (3)

The access point (router or HUB) in the network does not operate properly.

Step	Check description	Assumed cause	Measures	Reference
1	Restarting up	The router or the HUB does not properly activate.	Check if the link lamp of the router or hub is lit and restart it.	
2	Checking the Ethernet cable	The Ethernet cable is not properly connected.	In case the link lamp is off,once disconnect the Ethernet cable from the router and reconnect it to check the link lamp is lit.	
3	Checking the Ethernet cable	The Ethernet cable is faulty.	Replace the Ethernet cable.	
4	Restarting up	The router,HUB,PC or the main unit do not start up properly.	In case of no connection while the link lamp is lit,restart the router or hub and then restart up the PC and the main unit.	

(14)Print out is not available from the network factor (4)

The router is faulty, or the router settings are incorrect.

Step	Check description	Assumed cause	Measures	Reference
1	Changing the setting	The IP address is not properly set.	Check if the main unit IP Address indicated in the status page is the same as the IP Address in the [Port] tab of [Printer Properties] at the PC. If not,correct the IP address at the PC	
2	Changing the setting	The printer host name is not properly set.	Check the printer host name by printing out the status report when there is a server environment. Then,check the printer host name at the [Port] tab in the printer properties at a PC. If they differ,correct the printer host name.	

(15)Print out is not available from the network factor (5)

"Offline" appears and the print function is unavailable.

Step	Check description	Assumed cause	Measures	Reference
1	Checking the network	There is trouble in the network.	Check the internet connection and restore the network connection if necessary	
2	Restarting up	The PC malfunctions.	When "Offline" appears on the printer driver,check if it is used in the pause or offline. Then,restart up the PC.	
3	Changing the setting	The application is not properly set.	Check if the other Excel / Word data can be output and change the setting of the application.	
4	Changing the setting	The IP address is not properly set.	Check if the main unit IP Address indicated in the status page is the same as the IP Address in the [Port] tab of [Printer Properties] at the PC. If not,correct the IP address at the PC	
5	Restarting up	The IP address is not properly set.	Check if communication via command center or PING is available with IP address set up. Set up IP address again and restart the main unit if necessary.	
6	Restarting up	The port settings in the printer properties at the PC are incorrect.	Remove the checks at the dual-directional support and the SNMP status in the [Port] tab of the printer properties in a PC. Then,restart up the main unit and the PC.	
7	Restarting up	The main unit does not start up properly.	After the printer is ready,check if the test sheet can be output and restart the main unit.	

(16)Print out is not available from the network factor (6)

Print output is not possible with only one of the installed PCs. No error is displayed, and when a print instruction is given, it is put on hold. (Conditions: PC OS: Windows7, Print file: Test page, Connection method: Wireless LAN)

Step	Check description	Assumed cause	Measures	Reference
1	Restarting up	The main unit or the PC does not properly start up.	Restart up the main unit or the PC.	
2	Checking the cable	The cable is not properly connected.	Check the cable connection (Check if the network connection is available.)	
3	Checking the IP address	The IP address is not properly set.	Check if the ID address is properly set,and correct it if incorrect.	
4	Checking the network	There is trouble in the network.	Check if access via command center or PING is available and then check the hub or router.	
5	Changing the setting	The printer port IP address,the SNMP of the printer driver,or the bi-directional support is not properly set.	Correct the IP address and remove the checks at the SNMP status and the dual-directional support in the [Port] tab of the printer properties at a PC. Then,restart up the main unit and the PC.	
6	Uninstalling the security software or setting the exception	The restriction of the security software causes the phenomenon.	Check if the printer is available by uninstalling the security software. Or,set the exception setting.	

(17)Print out is not available from the network factor (7)

The main unit IP address is changed.

Step	Check description	Assumed cause	Measures	Reference
1	Restarting up	There is trouble in the network.	Check if a problem occurs with output from all PCs on the network and restart up hub or router.	
2	Checking the cable	The cable is not properly connected.	Check if there is problem with the cable connection on the network.	
3	Restarting up	The main unit does not start up properly.	If the operation panel or the buttons are not active,turn off the power switch and unplug the power cord. After passing 5s,reconnect the power cord and turn on the power switch.	
4	Changing the setting	IP address was changed.	Check if the main unit IP Address indicated in the status page is the same as the IP Address in the [Port] tab of [Printer Properties] at the PC. If not,correct the IP address at the PC	
5	Changing the setting	The static IP Address is not set in the System Menu	Set the static IP Address in the System Menu	

(18)Print out is not available from the printer driver setting factor (1)

Not connected is displayed on the PC, and the print job cannot be executed due to an error. (Cannot print.) (Condition: PC OS: Windows7, Print file: Test page, Connection method: Wireless LAN)

Step	Check description	Assumed cause	Measures	Reference
1	Deleting the job	The faulty print job is remaining.	Check if the print job remains in the printer driver and delete the remaining.	

(19)Print out is not available from the printer driver setting factor (2)

The machine itself displays that the printer is being prepared. The printed matter is not output and the job is stuck. (Conditions: PC OS: Windows7, Print file: Test page, Connection method: Wireless LAN)

Step	Check description	Assumed cause	Measures	Reference
1	Deleting the job	The faulty print job is remaining.	Check if the print job remains in the printer driver and delete the remaining.	

(20)Print out is not available from the printer driver setting factor (3)

A PC does not recognize the main unit.

Step	Check description	Assumed cause	Measures	Reference
1	Checking the settings	The printer driver is not properly set.	Check if the printer icon of PC is "Ready". (Right click the printer icon and execute the trouble shooting)	
2	Installing the printer driver	The printer driver is faulty.	Uninstall and reinstall the printer driver.	
3	Restarting up	The PC does not start up properly.	Restart up the PC.	
4	Checking the printer driver	The printer driver is not the latest version.	Update the printer driver.	

(21)Print out is not available from the printer driver setting factor (4)

PC operation does not stabilize.

Step	Check description	Assumed cause	Measures	Reference
1	Restarting up	The printer driver is not properly set.	Restart PC. (In case if many application software are running or the free space of the PC memory /HDD is low)	

(22)Print out is not available from the printer driver setting factor (5)

Check if the issue occurs when printing the data from all PCs in the network or from a certain PC. Then,print out the data from another PC if it occurs at a certain PC.

Step	Check description	Assumed cause	Measures	Reference
1	Checking the IP address	The IP address is not properly set.	Check if the IP Address indicated in the main unit status report and system menu is same as the IP address in the port setting of [Printer Properties] at the PC. If not,correct the IP address at the port setting	

(23)Print out is not available from the printer driver setting factor (6)

The incorrect printer driver was selected.

Step	Check description	Assumed cause	Measures	Reference
1	Installing the printer driver	The incorrect printer driver is selected.	Select the correct printer driver. If it is not in the PC,install the printer driver for the destination unit in the PC.	

(24)Data is not printed out due to the printer driver setting (7)

Installed printer driver shows "Deleting" and it remains when reinstalling it

Step	Check description	Assumed cause	Measures	Reference
1	Deleting the job	The print jobs remain in the spool inside the printer driver.	Delete all print jobs spooling inside the printer driver.	
2	Uninstalling the printer driver	There is the unused printer driver.	Delete the unused printer driver.	
3	Restarting the print	The system is pausing.	Right click the pausing printer icon and select [Print resuming]. Then,check the ready port.	
4	Checking the settings	The host name or the IP address is not properly set.	When the main unit connects to a local network,check the host name and the IP address on the status report of the main unit.	
5	Adding the Standard TCP/IP port	There is no main unit IP Address in the Standard TCP/IP Port	Add the main unit IP address in Standard TCP/IP port and print Test Page	

(25)The printed image is partly missing

The image data processing with a certain application (Excel, PDF) is faulty.

Step	Check description	Assumed cause	Measures	Reference
1	Checking the situation	The image data processing with a certain application (Excel,PDF) is faulty.	When the phenomenon occurs with a certain file only,check if there is an abnormality in the image data.	
2	Checking the situation	The data processing with a certain application (Excel,PDF) is faulty.	Check if the image does not drop out on the print preview,and refer to the Help in the application if necessary.	
3	Changing the setting	The PDL settings is incorrect.	Select "GDI compatible mode" at [PDL settings] in the print settings at the PC.	
4	Firmware upgrade	The firmware is not the latest version.	Upgrade the main firmware to the latest version.	

(26)"Paper Mismatch Error" appears

The paper size is not detected properly.

Step	Check description	Assumed cause	Measures	Reference
1	Changing the setting	The paper size of the cassette or bypass tray is not set properly.	Change the paper size setting for each paper feed tray according to the paper size loaded in the cassette or bypass tray.	
2	Relocating the paper width guides or the MP paper width guides	The locations of the paper width guides or the MP paper width guides do not match the paper size.	Relocate the paper width guides or the MP paper width guides to match the paper size.	
3	Check the bypass tray (when A3 is set in the bypass tray)	The MP tray is not pulled out.	Pull out the MP tray to extend it if the A3 size paper is not detected.	
4	Change settings (when it occurs on a cassette)	The paper size is not set properly in the System Menu.	Set the paper size in [Device Settings] > [Paper] > [Cassette 1 (~ 5) Settings] > [Paper Size] in the system menu. For custom size,select [Enter Size] and enter the size of the paper.	
5	Change settings (when it occurs in the bypass tray)	The paper size is not set properly in the System Menu.	Set the paper size in [Device Settings] > [Paper] > [Bypass Tray Settings]> [Paper Size] in the system menu. For custom size,select [Enter Size] and enter the size of the paper.	
6	Changing the setting	Paper Mismatch Error is set to [Ignore].	Set [Ignore] in [Device Settings] > [Error Handling Settings] > [Paper Mismatch Error] in the system menu.	

7 - 7 Error Messages

No.	Contents
(1)	"Check the document processor" is displayed
(2)	"The error occurred in the cassette X" is displayed (Cassette 1,2) even after removing/inserting the cassette and checking/removing paper remaining in the main unit
(3)	"The error occurred in the cassette X" is displayed (Cassette 3,4) even after removing/inserting the cassette and checking/removing paper remaining in the main unit
(4)	"The error occurred in the cassette 5" is displayed even after removing/inserting the cassette and checking/removing paper remaining in the main unit
(5)	The cover open message appears after closing the front cover
(6)	The cover open message appears after closing the right cover or the maintenance front cover
(7)	The add paper message appears while the paper is loaded on the MP tray
(8)	The message "Waste toner box is full." is wrongly displayed
(9)	When DP is used,"Remove the original from document processor." is wrongly displayed
(10)	When DP is used, document no-feed occurs and "Replace all originals." is displayed
(11)	The operation panel remains displaying "Network device is starting".
(12)	The waste toner box is installed, but "Install the waste toner box" is displayed.
(13)	"Memory is full" is displayed at Scan to SMB.

Content of Error Messages

(1)"Check the document processor" is displayed

Closing of the document processor cannot be detected.

Step	Check description	Assumed cause	Measures	Reference
1	Firmware upgrade	The firmware is faulty.	Upgrade the firmware to the latest version.	
2	Executing U244	The DP opening/closing sensor does not operate properly.	Execute U244 [Open]. If the DP opening/closing sensor does not operate properly,reattach it and reconnect the connector. If not repaired,replace it.	
3	Checking the connection	The connector is not connected properly,or the wire is faulty.	Clean the terminal of the following wire connectors and reconnect the connectors. If there is no continuity,replace the wire. • DP opening/closing sensor - DP PWB • DP PWB - Engine PWB	
4	Replacing the DP PWB	The DP PWB is faulty.	Replace the DP PWB.	
5	Replacing the engine PWB	The engine PWB is faulty.	Replace the engine PWB.	
6	Replacing the document processor	The document processor is faulty.	Replace the document processor.	

(2)"The error occurred in the cassette X" is displayed (Cassette 1,2) even after removing/inserting the cassette and checking/removing paper remaining in the main unit

Step	Check description	Assumed cause	Measures	Reference
1	Reinserting the primary paper feed unit	The primary paper feed unit is not inserted completely.	Pull the primary paper feed unit out,then reinsert it completely.	
2	Checking the lift plate	The lift plate does not rise up.	Reattach the lift plate. If it is deformed,replace it.	
3	Checking the connection	The connector is not connected properly,or the wire is faulty.	Clean the terminal of the following wire connectors and reconnect the connectors. If there is no continuity,replace the wire. • Lift motor 1,2 - Feed drive PWB • Feed drive PWB - Engine PWB	
4	Replacing the lift motor	The lift motor is faulty.	In case if it does not improve even U906 (Reset disable function) is executed,replace the lift motor 1 and 2.	
5	Replacing the feed drive PWB	The feed drive PWB is faulty.	Replace the feed drive PWB.	
6	Replacing the engine PWB	The engine PWB is faulty.	Replace the engine PWB.	

(3)"The error occurred in the cassette X" is displayed (Cassette 3,4) even after removing/inserting the cassette and checking/removing paper remaining in the main unit

Target: Paper feeder or Large capacity feeder

Step	Check description	Assumed cause	Measures	Reference
1	Reinserting the PF primary paper feed unit	The PF primary paper feed unit is not inserted completely.	Pull out the PF primary feed unit and reinsert it completely.	
2	Checking the lift plate	The PF lift plate does not rise up.	Reattach the PF lift plate. If it is deformed,replace it.	
3	Checking the connection	The connector is not connected properly,or the wire is faulty.	Clean the terminal of the following wire connectors and reconnect the connectors. If there is no continuity,replace the wire. • PF lift motor 1,2 - PF PWB • PF PWB - Engine PWB	
4	Replacing the PF lift motor	The PF lift motor is faulty.	In case if it does not improve even U906 (Reset disable function) is executed,replace the PF lift motor 1 and 2.	
5	Replacing the PF PWB	The PF PWB is faulty.	Replace the PF PWB.	
6	Replacing the engine PWB	The engine PWB is faulty.	Replace the engine PWB.	

(4)"The error occurred in the cassette 5" is displayed even after removing/inserting the cassette and checking/removing paper remaining in the main unit

Target: Side feeder

Step	Check description	Assumed cause	Measures	Reference
1	Reinserting the PF primary paper feed unit	The PF primary paper feed unit is not inserted completely.	Pull out the PF primary feed unit and reinsert it completely.	
2	Checking the lift plate	The PF lift plate does not rise up.	Reattach the PF lift plate. If it is deformed,replace it.	
3	Checking the connection	The connector is not connected properly,or the wire is faulty.	Clean the terminals of the electric wire connector below and reinsert them. If there is no continuity,replace the wire. • PF lift motor - PF PWB • PF PWB - PF PWB (PF-7140 or PF-7150) • PF PWB (PF-7140 or PF-7150) - Engine PWB	
4	Replacing the PF lift motor	The PF lift motor is faulty.	In case if it does not improve even U906 (Reset disable function) is executed,replace the PF lift motor.	
5	Replacing the PF PWB	The PF PWB is faulty.	Replace the PF PWB.	
6	Replace the PF PWB (PF-7140 or PF-7150).	The PF PWB (PF-7140 or PF-7150) is faulty.	Replace the PF PWB (PF-7140 or PF-7150).	
7	Replacing the engine PWB	The engine PWB is faulty.	Replace the engine PWB.	

(5)The cover open message appears after closing the front cover

Step	Check description	Assumed cause	Measures	Reference
1	Reattaching the front cover	The front cover does not turn the front cover switch on due to the fitting failure.	Reattach the front cover.	
2	Checking the connection	The connector is not connected properly,or the wire is faulty.	Clean the terminals of the electric wire connector below and reinsert them. If there is no continuity,replace the wire. • Front cover switch - Front drive PWB • Front drive PWB - Image drive PWB • Image drive PWB - Engine PWB	
3	Replacing the front cover switch	The front cover switch is faulty.	Replace the front cover switch.	
4	Replacing the front drive PWB	The front drive PWB is faulty.	Replacing the front drive PWB	
5	Replacing the image drive PWB	The image drive PWB is faulty.	Replacing the image drive PWB	
6	Replacing the engine PWB	The engine PWB is faulty.	Replace the engine PWB.	

(6)The cover open message appears after closing the right cover or the maintenance front cover

Step	Check description	Assumed cause	Measures	Reference
1	Checking the right cover switch	The covers are not fitted.	When the right cover switch does not turn on even if closing the right cover or the maintenance front cover,but check the covers if the right cover switch turns on by pushing directly. If the cover is not aligned with the other exterior covers,reattach it. When the switch does not always turn on,go to the next step.	
2	Checking the connection	The connector is not connected properly,or the wire is faulty.	Clean the terminals of the electric wire connector below and reinsert them. If there is no continuity,replace the wire. • Right cover switch - Image drive PWB • Image drive PWB - Power supply PWB • Power supply PWB - Engine PWB	
3	Replacing the right cover switch	The right cover switch is faulty.	Replace the right cover switch.	
4	Replacing the image drive PWB	The image drive PWB is faulty.	Replacing the image drive PWB	
5	Replacing the low voltage PWB	The low voltage PWB is faulty.	Replace the low voltage PWB.	
6	Replacing the engine PWB	The engine PWB is faulty.	Replace the engine PWB.	

(7)The add paper message appears while the paper is loaded on the MP tray

Step	Check description	Assumed cause	Measures	Reference
1	Checking the connection	The connector is not connected properly,or the wire is faulty.	Clean the terminals of the electric wire connector below and reinsert them. If there is no continuity,replace the wire. • MP paper sensor - Feed drive PWB • Feed drive PWB - Engine PWB	
2	Replacing the actuator	The actuator is deformed.	Replace the actuator for the MP paper sensor.	
3	Checking the MP paper sensor	The MP paper sensor is not properly attached or it is faulty.	Reattach the MP paper sensor,and replace it if it is not fixed.	
4	Replacing the feed drive PWB	The feed drive PWB is faulty.	Replace the feed drive PWB.	
5	Replacing the engine PWB	The engine PWB is faulty.	Replace the engine PWB.	

(8)The message "Waste toner box is full." is wrongly displayed

Step	Check description	Assumed cause	Measures	Reference
1	Firmware upgrade	The firmware is not latest version.	Upgrade the firmware to the latest version.	
2	Checking the waste toner box	The waste toner box is full.	Detach and reattach the waste toner box and close the waste toner box cover. If the waste toner box is full,replace it.	
3	Checking the weight sensor actuator	The weight sensor actuator does not return to the original position when detaching and reinstalling the waste toner box.	Remove the waste toner box,check the weight sensor actuator,and if it does not return,reinstall it.	

(9)When DP is used,"Remove the original from document processor." is wrongly displayed

Step	Check description	Assumed cause	Measures	Reference
1	Replacing the wire	The wire of the DP original sensor is short-circuited.	When DP original sensor is always on due to the short circuit of the wire,replace the wire.	
2	Replacing the DP original sensor	The DP original sensor always turns on.	Replace the DP original sensor.	
3	Replacing the DP PWB	The DP PWB is faulty.	Replace the DP PWB.	

(10)When DP is used, document no-feed occurs and "Replace all originals." is displayed

Step	Check description	Assumed cause	Measures	Reference
1	Checking the original	There is curl,tear,etc. at the tip of the original and it gets caught.	Check the tip of the original and correct any curls or tears.	
2	Checking the DP pickup roller.	The original slips on the DP pickup roller	Clean the DP pickup roller. If it does not repair,replace the DP pickup roller.	

(11)The operation panel remains displaying "Network device is starting".

A bit error in the flash memory of the main PWB has occurred.

Step	Check description	Assumed cause	Measures	Reference
1	Resetting the power	The start-up of the main PWB is faulty.	Turn off the power switch and pull out the power plug. After passing 5s,reinsert the power plug and turn on the power switch.	
2	Executing U021	The backup RAM data is faulty.	Execute U021 to initialize the backup RAM data.	
3	Replacing the main PWB	The main PWB is faulty.	Replace the main PWB.	

(12)The waste toner box is installed, but "Install the waste toner box" is displayed.

Step	Check description	Assumed cause	Measures	Reference
1	Reinstalling the waste toner box and resetting the power	The waste toner box moves toward you and falsely detects it.	Open the waste toner box cover,remove the waste toner box,and then reattach it. Make sure to close the waste toner box cover before resetting the power supply. After returning,check that the phenomenon does not recur. (If it recurs,proceed to the next step.)	
2	Checking the weight sensor actuator	The weight sensor actuator does not return to the original position when detaching and reinstalling the waste toner box.	Remove the waste toner box,check the weight sensor actuator,and if it does not return,reinstall it.	
3	Checking the connection	The connector is not connected properly to the waste toner motor.	Reconnect the connector to the waste toner motor.	
4	Replacing the waste toner box	The parts inside the waste toner box such as the waste toner motor,etc. is faulty.	Replace the waste toner box and execute U155 [Calibration].	

(13)"Memory is full" is displayed at Scan to SMB.

Step	Check description	Assumed cause	Measures	Reference
1	Changing the original scanner settings	The scanned data capacity is large.	Reduce the scan resolution of the original or select [Black&White] at [Color/Image Quality]. Then,resend.	
2	Checking the Status screen	The number of the waiting jobs exceeds the limit.	Check the sending job status on the Status screen. If many waiting jobs exist,delete the unnecessary sending jobs.	
3	Checking the OCR text recognition function	Large volume originals are scanned while the OCR text recognition is On.	If OCR text recognition function is unnecessary,set [OCR Text Recognition] to Off at [Home] key > [...] > [System Menu] key > [Function Settings] > [Function Defaults] > [Send/Store]. Then,scan the originals again. If it is necessary,set [File Separation] to [On] and scan the originals separately.	
4	Installing the HDD	The memory is not enough.	Install the HDD.	

7 - 8 Abnormal Noise

No.	Contents	Condition
(1)	Abnormal sound (basic support excluding fuser section)	
(2)	Abnormal sounds from the paper conveying section	Frictional wear, smudges / foreign objects adhesion on the conveying rollers, pulleys and the gears
(3)	Abnormal sound from the developer section	Caused by the developer unit.
(4)	Abnormal sound from the document processor	The frictional wear, affixing the smudges or the foreign objects, improperly attaching of the part
(5)	Abnormal sounds from the exit unit (cracking sounds)	The exit reverse motor is faulty.
(6)	Abnormal sound from the exit section	Silent mode setting, Smudges / foreign objects adhesion in the exit section
(7)	Fan rotating sounds are noisy	Fan motor is dirty or faulty.
(8)	Abnormal sound from the primary paper feed section	Frictional wear, smudges / foreign objects adhesion, attachment failure of the primary paper feed section
(9)	Abnormal sound from the machine front side	Wear, dirtiness, foreign objects adhesion or attachment failure at the MP feed section
(10)	Abnormal sound from the fuser section	Setting the silent mode, some component parts of the fuser section are faulty.
(11)	Abnormal sound from the fuser exit section	Rubbing sound between the fuser exit sub roller and the shaft caused by the dirt or adhesion of the foreign objects
(12)	Abnormal sounds from the IH unit (buzzing sounds)	When turning the power on, the buzzing sounds are noticed from the IH unit at the upper right side of the main unit.
(13)	Abnormal sound from inside the machine	The drive failure of the toner container, opening/closing failure of the toner supply shutter, the shortage of the toner amount or aggregation of the toner.
(14)	Abnormal sound from inside the machine	Smudges / foreign objects adhesion or the toner condensation in the developer section
(15)	Abnormal sound from inside the machine	Frictional wear, smudges / foreign objects adhesion, or the waste toner clogging in the drum section
(16)	Abnormal sound from inside the machine (jumping sounds)	Opening/closing operation failure, dirtiness, smudges / foreign objects adhesion of the waste toner vent of the primary transfer section
(17)	The drive sounds are noisy waiting	
(18)	Abnormal sound when driving the transfer belt (Tooth jumping sounds)	
(19)	Abnormal sounds from the image scanning section	The scanner rails are dirty or foreign objects adhere. The scanner wire fixing parts are not attached properly. The gear of the scanner motor is damaged.
(20)	Abnormal sounds from the bridge unit (cracking sounds when conveying the paper)	The BR conveying pulley is damaged, dirty or foreign objects adhere.

Content of Abnormal Noise

(1)Abnormal sound (basic support excluding fuser section)

Step	Check description	Assumed cause	Measures	Reference
1	Applying the grease	The grease on each gear or bushing is not enough.	Check the rotation of the roller,the pulley or the gear,if they do not rotate smoothly,apply the grease on the gears or the bearings. (EM-50LP,Part number: 7BG010009H)	
2	Reattaching the gears or the bearings	The parts such as each gear or bushing are not properly attached.	Reattach the gear or the bearings.	

(2)Abnormal sounds from the paper conveying section

Frictional wear, smudges / foreign objects adhesion on the conveying rollers, pulleys and the gears

Step	Check description	Assumed cause	Measures	Reference
1	Checking the registration cleaner	The sponge of the registration cleaner is dirty,or the sponge at the machine rear side peels up.	Clean the resist cleaner. Check the resist cleaner sponge and replace it if necessary. When inserting the resist cleaner into the main unit,insert it from diagonally above.	
2	Cleaning and applying the grease	The bushing or the gear is dirty or foreign objects are on them.	Clean the bearings and the gears of the conveying related rollers,and apply the grease (EM-50LP,Part number: 7BG010009H).	
3	Cleaning and applying the grease	The inside of the pulley is worn down.	Clean the drive shaft of the conveying related pulley and apply the Hanarl. (302LV94550)	
4	Cleaning and applying the grease	The gear tooth are dirty or foreign objects are on them.	Clean the drive gears of the conveying related rollers,and apply the grease (EM-50LP,Part number: 7BG010009H).	
5	Checking the pressure spring	Pressure of the conveying related roller and pulley are weak,and the bearing vibrates as the roller and pulley rotate.	Reattach the pressure springs of the conveying related rollers or the pulleys,or replace them.	
6	Replacing the feed drive unit	The feed drive unit is faulty.	Replace feed drive unit.	

(3)Abnormal sound from the developer section

Caused by the developer unit.

Step	Check description	Assumed cause	Measures	Reference
1	Checking the developer unit	The developer unit drive is faulty.	Check if the developer is not leaking from the developer unit,there is no damaged location,and whether the roller rotates manually. Repair if necessary.	
2	Replacing the developer unit	The developer unit is faulty.	Replace the developer unit.	

(4)Abnormal sound from the document processor

The frictional wear, affixing the smudges or the foreign objects, improperly attaching of the part

Step	Check description	Assumed cause	Measures	Reference
1	Cleaning and applying the grease	The bushing or the gear is dirty or foreign objects are on them.	Clean the bearings and the shafts,and apply the grease (EM-50LP,Part number: 7BG010009H).	
2	Checking the bushing	The bushing is worn down.	Replace the bearing of the DP conveying roller.	
3	Cleaning and applying the grease	The drive gear is dirty or foreign objects are on it.	Clean the gears which transmit the drive to the DP conveying roller,and apply the grease (EM-50LP,Part number: 7BG010009H).	
4	Checking the motor	The motor does not engage with the drive gear.	Reattach the DP conveying related motors.	

(5)Abnormal sounds from the exit unit (cracking sounds)

The exit reverse motor is faulty.

Step	Check description	Assumed cause	Measures	Reference
1	Checking the exit reverse motor	The exit reverse motor is faulty.	Execute U030 [SB (CW)] or [SB (CCW)]. If abnormal noise occurs,replace the output reversing motor.	

(6)Abnormal sound from the exit section

Quiet mode is not set. Or, the output section is dirty or foreign matter adheres.

Step	Check description	Assumed cause	Measures	Reference
1	Quiet mode setting	The output drive sound after printing is loud.	Select [On] in [Silent Mode] of [Adjustment / Maintenance] > "Operation Adjustment" in the system menu.	
2	Cleaning and applying the grease	The bearings or gears are dirty or the foreign objects adhere.	Clean the bearings of the upper exit roller and the gears,and apply the grease. (EM-50LP,Part number: 7BG010009H)	
3	Cleaning and applying the grease	The bearings are dirty or the foreign objects adhere.	Clean the shafts of the upper and lower output rollers and apply Hanal (302LV94550).	
4	Cleaning and applying the grease	The bearings are dirty or the foreign objects adhere.	Clean the reverse guide and the shaft of the exit feed-shift guide. If it is not possible to remove the dirt or the foreign objects,replace them.	

(7)Fan rotating sounds are noisy

Fan motor is dirty or faulty.

Step	Check description	Assumed cause	Measures	Reference
1	Cleaning the fan motor	The fan of the fan motor is dirty.	Execute U037 and specify the fan motor which has a high rotation sound,and clean the fan.	
2	Replacing the fan motor	The fan motor is faulty.	Reattach the fan motor and reconnect the connector. If not repaired,replace it.	

(8)Abnormal sound from the primary paper feed section

Frictional wear, smudges / foreign objects adhesion, attachment failure of the primary paper feed section

Step	Check description	Assumed cause	Measures	Reference
1	Checking the gear and the clutch	The parts such as the gear or the clutch are not properly attached.	Reattach the primary paper feed drive parts such as the gear or the clutch if they are not properly attached.	
2	Cleaning and applying the grease	The gear or the bushing is dirty or foreign objects are on them.	Clean the gears and the bearings of the primary feed drive section,and apply the grease. (EM-50LP,Part number: 7BG010009H)	
3	Cleaning and applying the grease	The shaft or the bushing is dirty or foreign objects are on them.	Clean the shaft and the bearings of the feed roller,and apply the grease. (EM-50LP,Part number: 7BG010009H)	
4	Checking the paper feed roller	The paper feed roller surface is dirty or worn down.	Clean the paper feed roller,or replace it if necessary.	

(9)Abnormal sound from the machine front side

Wear, dirtiness, foreign objects adhesion or attachment failure at the MP feed section

Step	Check description	Assumed cause	Measures	Reference
1	Checking the gear and the clutch	The parts such as the gear or the clutch are not properly attached.	When the gears or the clutch in the MP paper feed drive section are not properly attached,reattach them.	
2	Cleaning and applying the grease	The shaft or the bushing is dirty or foreign objects are on them.	Clean the shaft and the bearings of the MP feed roller,and apply the grease. (EM-50LP,Part number: 7BG010009H)	
3	Checking the MP friction pad	The surface of the MP friction pad is dirty or worn out.	Clean the MP friction pad and replace it if necessary.	
4	Checking the MP lift plate	The MP lift plate is not attached properly.	Reattach the MP lift plate.	

(10)Abnormal sound from the fuser section

Quiet mode is not set. Or, the parts in the fuser unit is faulty.

Step	Check description	Assumed cause	Measures	Reference
1	Quiet mode setting	The fuser drive sound after printing is loud.	Select [On] in [Silent Mode] of [Adjustment / Maintenance] > "Operation Adjustment" in the system menu.	
2	Replacing the fuser unit	The load during sliding between the fuser belt and the parts inside the belt is increasing (fricative noise). Or,the cushion attached to the inside of the cap at the end of the fuser belt is peeled off (clicking sound).	Replace the fuser unit.	

(11)Abnormal sound from the fuser exit section

Rubbing sound between the fuser exit sub roller and the shaft caused by the dirt or adhesion of the foreign objects.

Step	Check description	Assumed cause	Measures	Reference
1	Cleaning and applying the grease	The fuser exit sub roller or the bearings are dirty. Or,the foreign objects adhere.	Clean the fuser exit sub roller,the shaft,etc.,and apply the heat resistant grease.	
2	Replacing the fuser unit	The fuser unit is faulty.	Replace the fuser unit.	

(12)Abnormal sounds from the IH unit (buzzing sounds)

When turning the power on, the buzzing sounds are noticed from the IH unit at the upper right side of the main unit.

Step	Check description	Assumed cause	Measures	Reference
1	Replacing the IH unit	The cores of the IH unit are in contact with each other.	Replace the IH unit.	

(13)Abnormal sound from inside the machine

The drive failure of the toner container, opening/closing failure of the toner supply shutter, the shortage of the toner amount or aggregation of the toner.

Step	Check description	Assumed cause	Measures	Reference
1	Checking the toner container	The torque increases due to the toner condensation.	Shake the toner container enough and reinstall it. Or,replace it.	
2	Cleaning the drive parts of the container motor	The drive gear shaft or the bearings of the container motor is dirty. Or,the foreign objects are adhered.	If the drive gear of the container motor does not rotate smoothly,clean the shaft or the bearings.	
3	Reattaching the drive parts of the container motor	The stop ring of the container motor drive gear has come off.	Reattach the stop ring fixing the container motor drive gear to the shaft.	

(14)Abnormal sound from inside the machine

Smudges / foreign objects adhesion or the toner condensation in the developer section

Step	Check description	Assumed cause	Measures	Reference
1	Cleaning the developer unit	The shaft or the bushing of the developer roller is dirty or foreign objects are on them.	Check if the developer roller rotates. If not rotating smoothly,clean the shaft or the bushing of the developer roller.	(5) Procedures for cleaning the shaft of the developer roller and DS pulleys (page 7-455)
2	Replacing the developer unit	The torque inside the developer unit increased due to the toner condensation,etc.	Replace the developer unit.	

(15)Abnormal sound from inside the machine

Frictional wear, smudges / foreign objects adhesion, or the waste toner clogging in the drum section

Step	Check description	Assumed cause	Measures	Reference
1	Executing Drum refresh	Toner is not enough on the drum.	Execute the drum refresh to supply the toner to the cleaning unit.	

Step	Check description	Assumed cause	Measures	Reference
2	Cleaning and applying the grease	Foreign objects are on the tooth of the drum drive gear,or the grease is not enough.	Clean the tooth surface of the drum drive gear and apply the grease. (EM-50LP,Part number: 7BG010009H)	
3	Checking the drum unit and the developer unit	The drum screw does not properly rotate.	Check the drum screw rotation and if it does not rotates smoothly,clean it. If it locks,replace the IH unit.	

(16)Abnormal sound from inside the machine (jumping sounds)

Opening/closing operation failure, dirtiness, smudges / foreign objects adhesion of the waste toner vent of the primary transfer section

Step	Check description	Assumed cause	Measures	Reference
1	Checking the shutter of the toner waste vent	The shutter of the waste toner vent is not properly opened and closed.	Check the opening and closing operation of the shutter of the toner waste vent in the transfer cleaning unit,and fix the parts if necessary.	
2	Checking the cleaning screw	The cleaning screw does not properly rotate.	Check if the cleaning screw in the transfer cleaning unit rotates smoothly,and clean it if not rotating smoothly.	
3	Cleaning and applying the grease	The drive gear or the bushing is dirty,or foreign objects are on them.	Clean the drive gears and the bearings of the primary transfer unit,and apply the grease (EM-50LP,Part number: 7BG010009H) or Hanarl (302LV94550). (If they are conductive bearings,apply Hanarl.)	
4	Replacing the primary transfer unit	The primary transfer unit is faulty.	Replace the primary transfer unit.	

(17)The drive sounds are noisy waiting

Step	Check description	Assumed cause	Measures	Reference
1	Quiet mode setting	The Quiet Mode is off.	Select [On] in [Silent Mode] of [Adjustment / Maintenance] > "Operation Adjustment" in the system menu.	

(18)Abnormal sound when driving the transfer belt (Tooth jumping sounds)

Step	Check description	Assumed cause	Measures	Reference
1	Cleaning and applying the grease	The drive gear is dirty or the foreign object is adhered.	Clean the drive gears and the bearings of the primary transfer unit,and apply the grease (EM-50LP,Part number: 7BG010009H) or Hanarl (302LV94550). (If they are conductive bearings,apply Hanarl.)	
2	Replacing the main drive unit	The gear section of the developer K/transfer belt motor and the gear engaged are scraped. Or,the drive of the parts in the main drive unit are faulty.	Replace the main drive unit.	

(19)Abnormal sounds from the image scanning section

Improper installation of scanner wire fixing parts, scratches on the gear part of the scanner motor

Step	Check description	Assumed cause	Measures	Reference
1	Checking the scanner wire fixing parts	The front wire holding plate or rear wire holding plate is not attached properly and it contacts the scanner frame.	Reattach the front wire holding plate and rear wire holding plate which fix the scanner wires to mirror frame A (primary mirror unit).	
2	Reattaching the scanner motor	The scanner motor drive is not transmitted properly.	Reattach the scanner motor.	
3	Replacing the scanner motor	The gear of the scanner motor is damaged by pinching foreign objects,etc..	Replace the scanner motor.	

(20)Abnormal sounds from the bridge unit (cracking sounds when conveying the paper)

Dirt, scratches, and foreign matter adhered to the BR conveying roller when the middle conveying unit (AK - 7110) is installed.

Step	Check description	Assumed cause	Measures	Reference
1	Checking the BR conveying pulley	The BR conveying pulley is damaged,dirty or foreign objects adhere.	Clean the BR conveying pulley. If damaged,replace it.	
2	Cleaning and applying the grease	The bushing is dirty or foreign objects adhere.	Clean the bushing for the BR conveying roller and apply the grease (GE-676).	
3	Cleaning the BR conveying guide	The BR conveying guide is dirty or foreign objects adhere.	Clean the BR conveying guide. If difficult to remove the smudge or foreign objects,replace the guide.	
4	Checking the BR transfer motor 1	The BR conveying motor1 is faulty.	U030 Execute [Bridge1 (CW)] or [Bridge1 (CCW)]. If abnormal noise occurs,replace BR transport motor 1.	
5	Checking the BR transfer motor 2	The BR conveying motor2 is faulty.	U030 Execute [Bridge2 (CW)] or [Bridge2 (CCW)]. If abnormal noise occurs,replace the BR carrier motor 2.	

7 - 9 Malfunction

No.	Contents	Condition
(1)	The size of the paper loaded in the cassette is falsely detected or not displayed (cassettes 1 and 2).	
(2)	The size of the paper loaded in the cassette is falsely detected or not displayed (cassettes 3 and 4)	
(3)	The MP tray paper size is misdetected	
(4)	The developer fan motor does not rotate	
(5)	The main unit malfunctions even if turning on the power switch	
(6)	Toner falls over the paper conveying section	(Final phenomenon: Toner adheres on the paper leading edge)
(7)	No display in the operation panel	(Image on the operation panel is faulty or becomes pure white)
(8)	The operation panel remains "Welcome!"	Communicate between the main PWB and the operation panel main PWB cannot be done.'
(9)	No action by pressing the operation panel	
(10)	The login fails with other than the ID card	
(11)	The original size on the original glass is misdetected.	A4 size original is displayed as A3 size when loading it on the contact glass and closing the platen cover
(12)	The container cover is not opened although the toner container is not installed.	
(13)	The FAX icon is not displayed on the operation panel even if installing the FAX PWB.	
(14)	The finisher is not displayed on the operation panel even if the 4,000 - sheet finisher is installed.	
(15)	The Job separator LED continuously turns on even if removing the paper from the JS tray	The JS actuator (at the job separator) continues to turn the JS sensor (at the main unit) on while there is no paper.
(16)	Even if the option cassette is installed, it is not displayed on the operation panel.	

Content of Malfunction

(1)The size of the paper loaded in the cassette is falsely detected or not displayed (cassettes 1 and 2).

Step	Check description	Assumed cause	Measures	Reference
1	Checking the actuator	The actuator does not operate properly.	Check if the actuator for the paper length switch operates when inserting the cassette. If it does not properly operate,reattach the actuator.	
2	Checking the paper length switch and fan-shape arm	The paper length switch or fan-shape arm does not operate properly.	Reinstall the paper length switch 1 (or 2) or the fan - shaped arm.	
3	Checking the detected paper size on the operation panel	When inserting the cassette vigorously into the main unit with a large amount of paper loaded in the cassette,the paper width guide temporarily deflects,the angle of the switching lever for the paper width switch shifts,and the paper width switch does not turn on correctly.	1. After inserting the cassette vigorously into the main unit with a large amount of paper loaded in the cassette,check the paper size of the target cassette which is detected on the operation panel. 2. If the paper size in the cassette is not detected,pull out the cassette and insert the cassette with the normal strength. If it does not reoccur,please explain to the user not to insert the cassette vigorously. 3. If there is concern about reoccurrence by the same operation after that,specify the paper size of the target cassette instead of [Auto].	
4	Checking the connection	The connector is not connected properly,or the wire is faulty.	Clean the terminals of the electric wire connector below and reinsert them. If there is no continuity,replace the wire. • Paper length switch 1 (or 2) - Feed drive PWB • Paper width switch 1 (or 2) - Feed drive PWB • Feed drive PWB - Engine PWB	
5	Replacing the paper length switch	The paper length switch is faulty.	Replace the paper length switch 1 (or 2).	
6	Replacing the paper width switch	The paper width switch is faulty.	Replace the paper width switch 1 (or 2).	
7	Replacing the feed drive PWB	The feed drive PWB is faulty.	Replace the feed drive PWB.	
8	Replacing the engine PWB	The engine PWB is faulty.	Replace the engine PWB.	

(2)The size of the paper loaded in the cassette is falsely detected or not displayed (cassettes 3 and 4)

Target: Paper feeder

Step	Check description	Assumed cause	Measures	Reference
1	Checking the actuator	The actuator does not operate properly.	Check if the actuator for the PF paper length switch operates when the cassette is inserted. If there is something wrong with the operation,reinstall the actuator.	
2	Check the PF paper length switch and fan - shaped arm	The PF paper length switch or fan - shaped arm is not operating normally.	Reinstall the PF paper length switch or fan - shaped arm.	
3	Checking the detected paper size on the operation panel	When inserting the cassette vigorously into the main unit with a large amount of paper loaded in the cassette,the paper width guide temporarily deflects,the angle of the switching lever for the paper width switch shifts,and the paper width switch does not turn on correctly.	1. After inserting the cassette vigorously into the main unit with a large amount of paper loaded in the cassette,check the paper size of the target cassette which is detected on the operation panel. 2. If the paper size in the cassette is not detected,pull out the cassette and insert the cassette with the normal strength. If it does not reoccur,please explain to the user not to insert the cassette vigorously. 3. If there is concern about reoccurrence by the same operation after that,specify the paper size of the target cassette instead of [Auto].	
4	Checking the connection	The connector is not connected properly,or the wire is faulty.	Clean the terminals of the electric wire connector below and reinsert them. If there is no continuity,replace the wire. • PF paper length switch 1 (or 2) - PF PWB • PF paper width switch 1 (or 2) - PF PWB • PF PWB - Engine PWB	
5	Replacing the PF paper length switch	The PF paper length switch is faulty.	Replace the PF paper length switch 1 (or 2).	
6	Replacing the PF paper width switch	The PF paper width switch is faulty.	Replace the PF paper width switch 1 (or 2).	
7	Replacing the PF PWB	The PF PWB is faulty.	Replace the PF PWB.	
8	Replacing the engine PWB	The engine PWB is faulty.	Replace the engine PWB.	

(3)The MP tray paper size is misdetected

Step	Check description	Assumed cause	Measures	Reference
1	Checking the sub tray	Sub tray is not in the proper position.	Pull out the sub tray to the position where you can see the triangle mark. Or,store it completely inside the MP frame.	
2	Checking the connection	The connector is not connected properly,or the wire is faulty.	Clean the terminal of the following wire connectors and reconnect the connectors. If there is no continuity,replace the wire. • Main unit - Paper conveying unit • MP paper length sensor - Feed drive PWB • MP paper width sensor - Feed drive PWB • Feed drive PWB - Engine PWB	
3	Checking the MP paper width sensor	MP Paper width sensor does not operate correctly.	Check the home position of the MP paper width sensor,and reattach it if necessary. Then,replace the sensor if it is not fixed.	
4	Checking the MP paper length sensor	MP Paper length sensor does not operate correctly.	Reattach the MP paper length sensor. If not repaired,replace it.	
5	Replacing the feed drive PWB	The feed drive PWB is faulty.	Replace the feed drive PWB.	
6	Replacing the engine PWB	The engine PWB is faulty.	Replace the engine PWB.	

(4)The developer fan motor does not rotate

Final phenomenon: During continuous printing, the printing operation of the Main unit frequently stops because the inside of the machine is cooled as the temperature inside the machine rises.

Step	Check description	Assumed cause	Measures	Reference
1	Checking the developer fan motor operation	Foreign materials such as dust adhere on the developer fan motor.	Clean the developing fan motor. Execute "DLP4" of U037 and check the operation. If it does not work properly,proceed to the next step.	
2	Checking the connection	The connector is not connected properly,or the wire is faulty.	Clean the terminals of the electric wire connector below and reinsert them. If there is no continuity, replace the wire. • Developing fan motor - Drum / developing relay PWB • Drum / developing relay PWB - Front drive PWB • Front drive PWB - Image drive PWB • Image drive PWB - Engine PWB	
3	Replacing the developer fan motor	The developer fan motor is faulty.	Replace the developer fan motor.	
4	Replacing the drum/developer relay PWB	The drum/developer relay PWB is faulty.	Replace the drum/developer relay PWB.	
5	Replacing the front drive PWB	The front drive PWB is faulty.	Replacing the front drive PWB	
6	Replacing the image drive PWB	The image drive PWB is faulty.	Replacing the image drive PWB	
7	Replacing the engine PWB	The engine PWB is faulty.	Replace the engine PWB.	

(5)The main unit malfunctions even if turning on the power switch

Step	Check description	Assumed cause	Measures	Reference
1	Measuring the input voltage	The power cord has no continuity.	Plug the power cord into another wall outlet.	
2	Replacing the power cord	The power cord is faulty.	The power plug is faulty such as deformation,or if the power cord is not conducting,replace the power cord.	
3	Checking the power switch	The power switch is faulty.	Check the continuity between the contacts of the power switch. Replace the power switch if there is no continuity.	
4	Checking the connection	The connector or FFC terminal is not connected properly. Or,the wire and FFC is faulty.	Reinsert the following connector and reconnect the FFC. If there is no continuity,replace the wire. If the FFC terminal is deformed or the FFC is broken, replace the FFC. • Power supply PWB - Engine PWB • Engine PWB - Main PWB • Power supply PWB - Main PWB	
5	Replacing the low voltage PWB	The low voltage PWB is faulty.	Replace the low voltage PWB.	
6	Replacing the engine PWB	The engine PWB is faulty.	Replace the engine PWB.	
7	Checking the main PWB	The main PWB is faulty.	Replace the main PWB.	

(6)Toner falls over the paper conveying section

Final phenomenon: Toner adhesion to the tip of the paper

Step	Check description	Assumed cause	Measures	Reference
1	Cleaning the developer unit and drum unit	The developer unit or the drum unit is dirty.	Clean the developing unit and the exterior of the drum unit with a dry cloth.	
2	Firmware upgrade	The firmware is not latest version.	Upgrade the firmware to the latest version.	
3	Executing Developer refresh	The amount of toner in the developer unit is large. Or,the toner is deteriorated.	Execute the developer refresh twice.	
4	Replacing the developer unit	The toner is deteriorated.	Replace the developer unit.	

(7)No display in the operation panel

The image on the operation panel is abnormal or becomes blank.

Step	Check description	Assumed cause	Measures	Reference
1	Resetting the power	The main firmware does not start correctly.	Turn off the power switch and pull out the power plug. After passing 5s,reinsert the power plug and turn on the power switch. Then,set [Quick Recovery] in the Sleep Level setting.	
2	Checking the connection	The connector is not connected properly. Or,the wire is faulty so that the power for display is not supplied.	Clean the terminals of the connectors of the following wire and the SATA cable and reconnect them. If there is no continuity,replace the wire or the SATA cable. • Main PWB - Operation panel main PWB	
3	Replacing the main PWB	The main PWB is faulty.	Replace the main PWB.	
4	Replacing the operation panel main PWB	The operation panel main PWB is faulty.	Replace the panel main PWB.	

(8)The operation panel remains "Welcome!"

Communicate between the main PWB and the operation panel main PWB cannot be done.'

Step	Check description	Assumed cause	Measures	Reference
1	Resetting the power	The communication between the main PWB and the operation panel main PWB is faulty.	Turn off the power switch and pull out the power plug. After passing 5s,reinsert the power plug and turn on the power switch.	
2	Checking the connection	The connector is not connected properly. Or,the wire or the SATA cable is faulty.	Clean the terminals of the connectors of the following wire and the SATA cable and reconnect them. If there is no continuity,replace the wire or the SATA cable. • Main PWB - Operation panel main PWB	
3	Executing U021	The backup RAM data is faulty.	Execute U021 to initialize the backup RAM data.	
4	Replacing the main PWB	The main PWB is faulty.	Replace the main PWB.	
5	Replacing the operation panel main PWB	The operation panel main PWB is faulty.	Replace the panel main PWB.	

(9)No action by pressing the operation panel

Step	Check description	Assumed cause	Measures	Reference
1	Removing foreign material	Foreign matter enters the gap between the cover of the operation unit and the touch panel,and the part pressed by the foreign matter reacts,so it does not react at the original position.	Remove foreign matter around the touch panel.	

(10)The login fails with other than the ID card

Step	Check description	Assumed cause	Measures	Reference
1	Changing the setting	Log in by the key board is not allowed.	Select [Department Management / Authentication] > [IC Card Settings] - [KeyPWB Login] from the system menu and set it to "Allow".	

(11)The original size on the original glass is misdetected.

A4 size original is displayed as A3 size when loading it on the contact glass and closing the platen cover

Step	Check description	Assumed cause	Measures	Reference
1	Checking the connection	The connector is not connected properly,or the wire is faulty.	Clean the terminal of the following wire connectors and reconnect the connectors. If there is no continuity,replace the wire. • Original size timing sensor - Engine PWB • Original size sensor - Engine PWB	
2	Checking the original size timing sensor	The original size timing sensor does not operate properly.	Check if the exposure lamp turns on by pressing the actuator of the original size timing sensor. If not turning on,replace the sensor.	
3	Checking the original size sensor	The original size sensor does not operate properly.	Reattach the original size sensor. If not repaired,replace it.	
4	Replacing the engine PWB	The engine PWB is faulty.	Replace the engine PWB.	

(12)The container cover is not opened although the toner container is not installed.

Step	Check description	Assumed cause	Measures	Reference
1	Checking the container solenoid	The connector is not properly connected.	Select [Cont Cover (*)] of U033,press the [Start] key,and check if the container solenoid operates. If it does not work,reinsert the container solenoid connector.	
2	Checking the connection	The connector is not connected properly,or the wire is faulty.	Clean the terminals of the electric wire connector below and reinsert them. If there is no continuity, replace the wire. • Container solenoid - Front drive PWB • Front drive PWB - Image drive PWB • Image drive PWB - Engine PWB	
3	Replacing the container solenoid	The container solenoid is faulty.	Replace the container solenoid.	
4	Replacing the front drive PWB	The front drive PWB is faulty.	Replacing the front drive PWB	
5	Replacing the image drive PWB	The image drive PWB is faulty.	Replacing the image drive PWB	
6	Checking the engine PWB	The engine PWB is faulty.	Replace the engine PWB.	

(13)The FAX icon is not displayed on the operation panel even if installing the FAX PWB.

Step	Check description	Assumed cause	Measures	Reference
1	Reinstalling the FAX PWB	The fax PWB is not working properly or is not installed properly.	Turn off the power switch and pull out the power plug. After passing 5s,reattach the FAX PWB and reinsert the power plug. Then,turn on the power switch.	
2	Firmware upgrade	The FAX firmware is not latest.	Upgrade the fax firmware to the latest version.	
3	Replacing the FAX PWB	The FAX PWB is faulty.	Replace the FAX PWB.	
4	Replacing the main PWB	The main PWB is faulty.	Replace the main PWB.	

(14)The finisher is not displayed on the operation panel even if the 4,000 - sheet finisher is installed.

Step	Check description	Assumed cause	Measures	Reference
1	Resetting the power	The finisher does not operate properly.	Turn off the power switch and pull out the power plug. After passing 5s,reinsert the power plug and turn on the power switch.	
2	Checking the connection	The connection between the finisher and the main unit is faulty.	Reinstall the finisher to the main unit. If the connector or wire is faulty,repair or replace it.	
3	Replacing the DF PWB	The DF PWB is faulty.	Replace the DF PWB.	

(15)The Job separator LED continuously turns on even if removing the paper from the JS tray

The JS actuator keeps turning on the JS sensor when there is no paper.

Step	Check description	Assumed cause	Measures	Reference
1	Reinstalling the job separator	The job separator is not installed properly.	Reinstall the job separator.	
2	Checking the JS actuator	The shaft of the JS actuator comes off or is deformed.	Reattach the JS actuator. If the shaft is deformed,replace the JS actuator.	
3	Checking the connection	The connector is not connected properly,or the wire is faulty.	Clean the terminal of the following wire connectors and reconnect the connectors. If there is no continuity,replace the wire. • JS sensor - Feed image PWB • Feed image PWB - Engine PWB	
4	Replacing the JS sensor	The JS sensor does not operate properly.	Replace the JS sensor.	
5	Replacing the image drive PWB	The image drive PWB is faulty.	Replacing the image drive PWB	
6	Replacing the engine PWB	The engine PWB is faulty.	Replace the engine PWB.	

(16)Even if the option cassette is installed, it is not displayed on the operation panel.

Step	Check description	Assumed cause	Measures	Reference
1	Resetting the power	The option cassette is not working properly.	Turn off the power switch and pull out the power plug. After passing 5s,reinsert the power plug and turn on the power switch.	
2	Checking the connection	There is something wrong with the connection between the option cassette and the Main unit due to deformation of the drawer connector pin.	Reattach the optional cassette to the Main unit. At that time,if there is something wrong with the drawer connector pin or the wire,repair or replace it.	
3	Checking the PF PWB (paper feeder or large capacity feeder)	The PF PWB is faulty.	Reconnect the wire connector on the PF PWB. If it does not improve,replace the PF PWB,lock the PF fixing plate and fix the screws securely,and then turn on the power.	
4	Checking the PF PWB (side feeder)	The PF PWB is faulty.	Reconnect the wire connector on the PF PWB. If it does not improve,replace the PF PWB.	

7 - 10 Others

(1)Adjusting the center position for the punch unit and the paper width guides

(1-1)Adjusting the center position for the punch unit

1 Adjust the center position of the punch unit (A) based on the MP tray.

1 Pull out the inner finisher from the main unit.

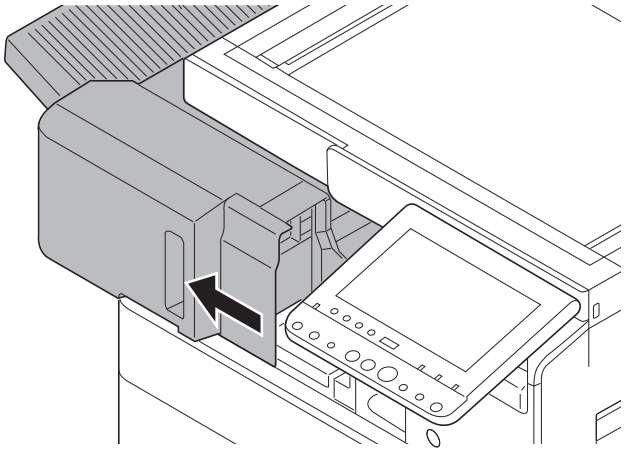

2 Remove the screw (B) and detach the punch unit cover (C).

3 Perform the test copy by feeding paper from the MP tray.

4 Loosen the screw (1).

When the punch holes shift toward the machine front side, relocate the punch unit (A) toward the machine rear side (➡).

When the punch holes shift toward the machine rear side, relocate the punch unit (A) toward the machine front side (⇨).

5 Repeat Step2-3 till the punch holes are located within the reference value.

[Reference value (d)] (The reference value (e) cannot be adjusted.)

• For Metric: d=40.0mm±2mm, e=80mm±0.5mm

• For Inch: d=34.93mm±2mm (1.38in±0.08in), e=69.85mm±0.5mm (2.75in±0.02in)

6 Tighten the screw (1).

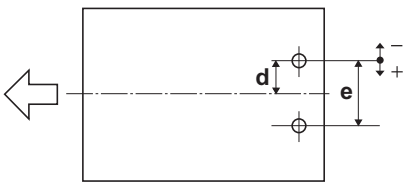

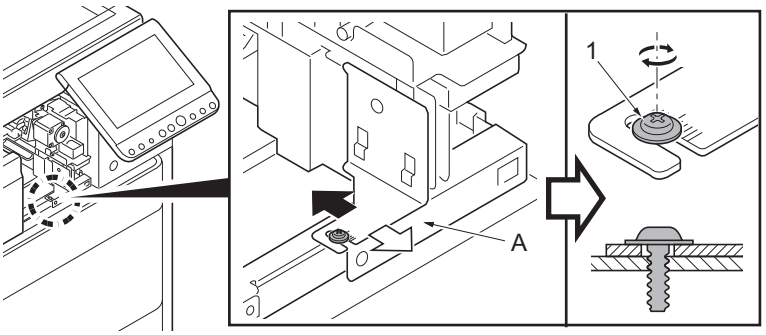

7 Reattach the punch unit cover (C) by the screw (B).

8 Reinstall the inner finisher into the main unit.

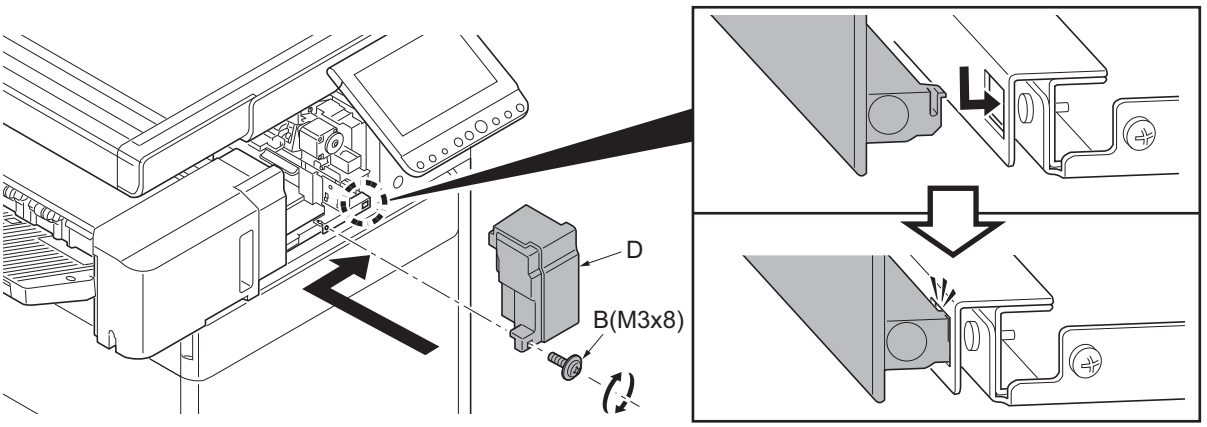

(1-2)Adjusting the center position for each paper source (except the MP tray)

Adjusting the center position for each paper source.

Adjust the center position for each paper source based on the center position for the punch unit after finishing the adjustment at Step 1. (For Cassette 1 to 4 in the main unit of the paper feeder)

1 Perform the test copy by feeding paper from each paper source.

2 Loosen the fixing screw (E) of the pinion gear (D) that secures the center position for the paper width guides when the punch holes shift.

3 Relocate the paper width guide (F) of the machine rear side in the counter direction of the punch holes shifted.

- When the punch holes shift in the machine rear direction, relocate the paper width guides (F) in the machine front direction.
- When the punch holes shift in the machine front direction, relocate the paper width guides (F) in the machine rear direction.

4 Tighten the fixing screw (E).

5 Put paper on the cassette, and relocate the paper width guides at the machine front and rear sides along the paper width.

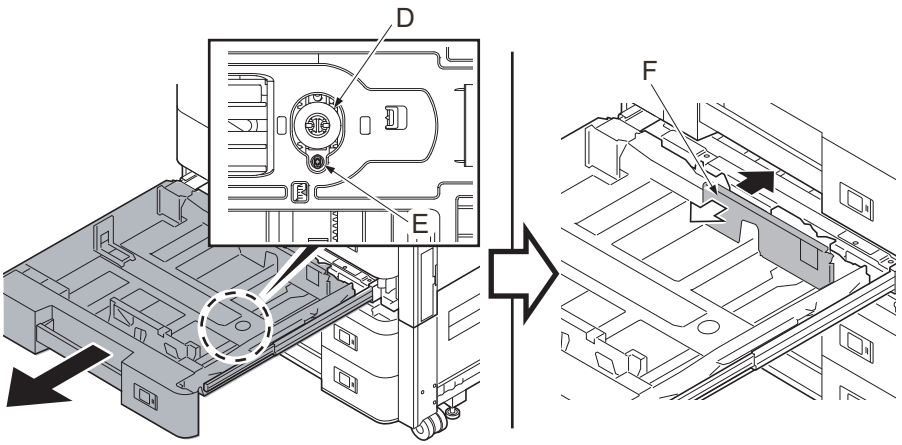

6 Repeat Step 1-5 till the punch holes locate within the reference value.

7 [Reference value (d)] (The reference value (e) cannot be adjusted.)

• For Metric: d=40.0mm±2mm, e=80mm±0.5mm

• For Inch: d=34.93mm±2mm (1.38in±0.08in), e=69.85mm±0.5mm (2.75in±0.02in)

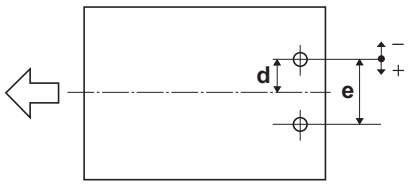

- This adjustment is to prevent "J421x (Fuser sensor stay jam)" or "dog-ear" which occurs when feeding LetterR or Legal size paper.
- Therefore, it is not necessary to make adjustment for Large Capacity Feeder and Side Feeder since they do not feed LetterR and Legal.

(1-3)Adjusting the center line at U034

Execute U034 [LSU Out Left] to adjust the center line of each paper source (except the MP tray).

(2)Procedure to check the pressure release gear

Procedure to check the pressure release gear

Be sure to check if the pressure release gear at the machine front side of the primary transfer unit comes off or not by pulling the pressure release joint gear at the machine rear side.

- When the pressure release joint gear can be pulled out:
  The pressure release gear comes off. Therefore, replce with the new primary transfer unit.
- When the pressure release joint gear cannot be pulled out:
  The pressure release gear does not come off.

[Primary transfer unit]

(Machine rear side)

(Machine front side)

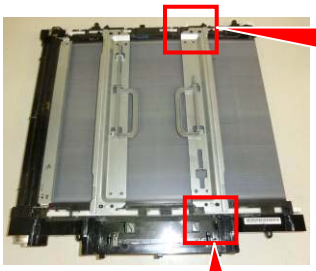

[The way to check the pressure release gear]

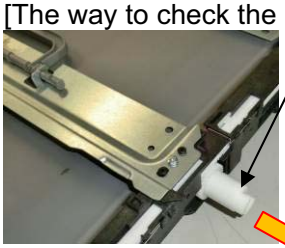

Pressure release joint gear:
If it is possible to pull out to the outside direction of the unit (Arrow direction of the photo to the left), the pressure release gear is come off.

(Condition that the cover is removed)

Normal condition

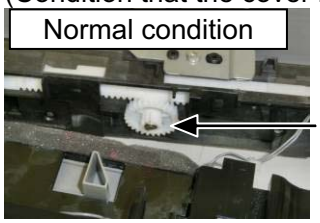

Pressure release gear

Gear is coming off

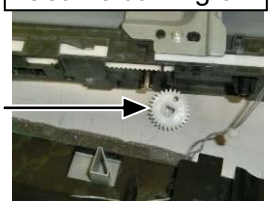

If the pressure release gear comes off, the pressure release structure of the machine front side does not operate properly, it leads to the abnormal image or service call error.

Note:
If the print operation is done when the pressure releasee gear comes off, the abnormal image (missing image, light image, etc. Refer to [Fig.1].) or service call error C2700 (the primary/secondary transfer pressure release error) might occur. And once the event log is printed, the history of service call below might remain on the list.

- C7601, C7602: ID sensor error
- C7611 to C7614: Bias calibration read value error
- C7620: Auto color registration error
- C5130 to C5134: Primary transfer high-voltage error

[Fig.1: U089 MIP-PG image]
(The condition of the abnormal image defers depending on the products or the condition of the pressure release structure)

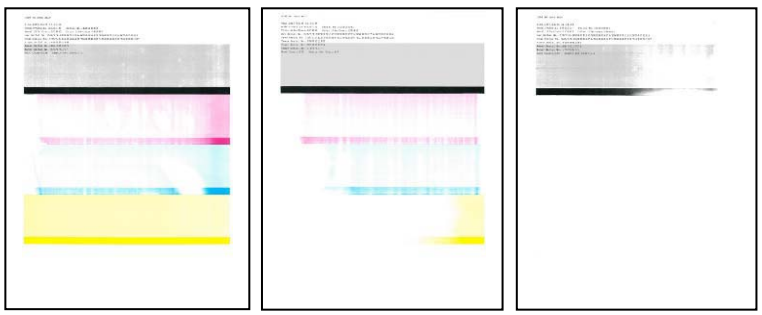

(3)Corrective measures for the abnormal sound when collecting the waste toner

Replacement procedure

Estimate work time: 30 minutes

No	Procedure	Detail
1	**[Remove the main drive unit]** **(Procedure 1 to (-->) 11)** Remove the screw (a) (M3x10) and slide the rear upper cover (b) in the arrow direction.	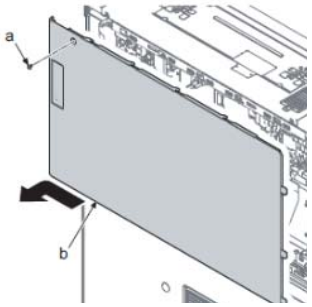
2	Remove 2 screws (a) (M3x10). Push down the rear lower cover (b) and release the upper rib, and lift up while it opens to release the lower hook (c). After that, remove it in the arrow direction.	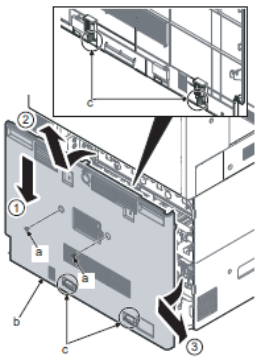
3	Disconnect 3 connectors (b) from the feed drive PWB (a).	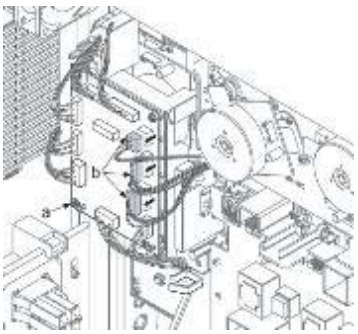
4	Release 4 wire saddles (a). Remove the binding band with the snap and remove the wire (c).	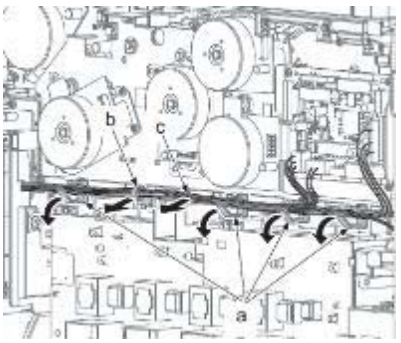

No	Procedure	Detail
(-->) 5	Disconnect connectors (Connectors b in the red frame section) from the feed image PWB (a).	[Low-end model] 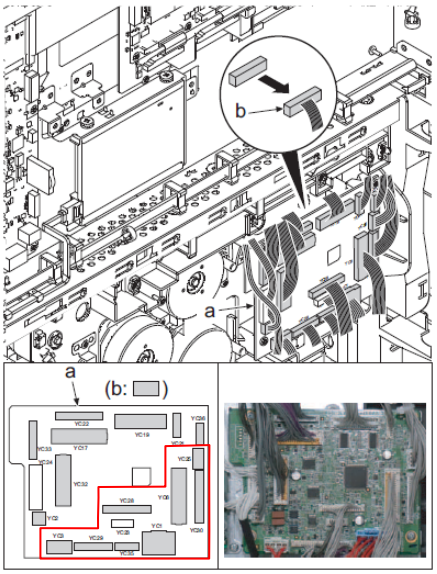 [High-end model] 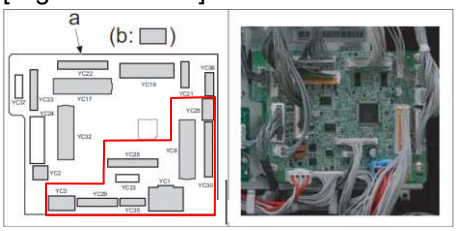
(-->) 6	Disconnect the connector (a). Detach the wire saddle (b) and disconnect the connector (c).	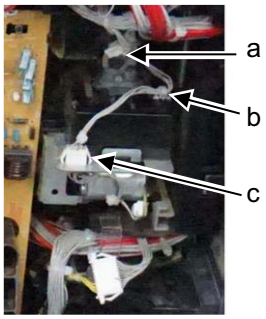
(-->) 7	**Hang the connectors disconnected at the procedure 5 and disconnected at the procedure 6 (c) on the hook (d)** **[Note]** **If trying to detach the main drive unit without hanging the connector in the hook (d), the connector wire interferes with the waste toner joint and the sensor cleaning spring in the waste toner joint gets deformed, then it might be the possibility to make wrong detection of the waste toner full or the waste toner clog.**	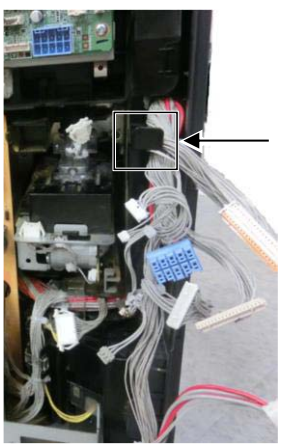 [Main drive unit] 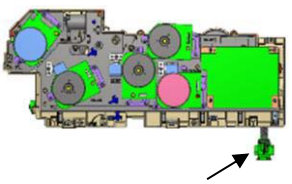 Waste toner joint

No	Procedure	Detail
(-->) 8	**Disconnect the connectors (Connectors b in the red frame section) from the feed image PWB (a)**	[Low-end model] 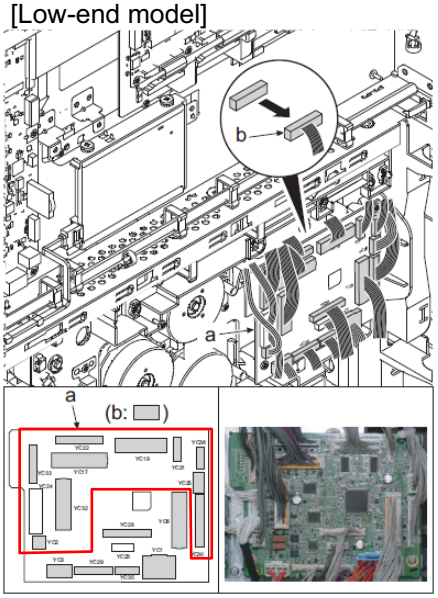 [High-end model] 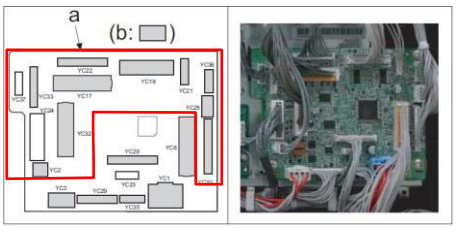
(-->) 9	**Remove six (6) screws (a) (M3 x 8) from the main drive unit(b)**	[Low-end model] 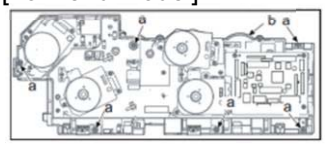 [High-end model] 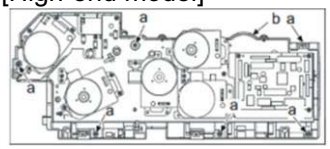

No	Procedure	Detail
(-->) 10	**Lift up the hook (b) of the waste toner joint (a) and release the stopper (c), and pull it out towards the front side.** **[Note when detaching the main drive unit]** **- If trying to detach the main drive unit without pulling out the waste toner joint (a), the sensor cleaning spring in the joint gets deformed and then there might be the possibility to make wrong detection of the waste toner full or the waste toner clog. Therefore, pull the waste toner joint (a) out towards the front side before detaching the main drive unit.** **- When pulling the waste toner joint (a) out towards the front side, be careful that the cleaning spring in the joint does not get deformed.**	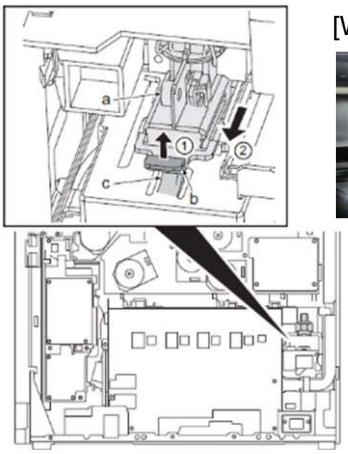 [Waste toner joint (a)] 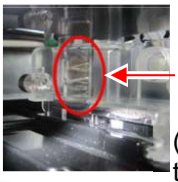 Spring (Rear side of the machine)
(-->) 11	**Detach the main drive unit(b).**	[Low-end model] 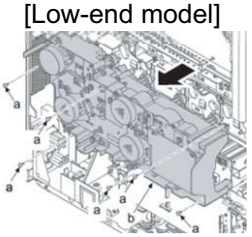 [High-end model] 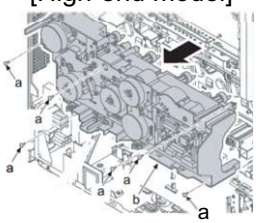
(-->) 12	**[Detaching/attaching the waste toner forwarding unit] (Procedure (-->) 12 to 13)** Place the main drive unit on the work table in the direction of the right figure.	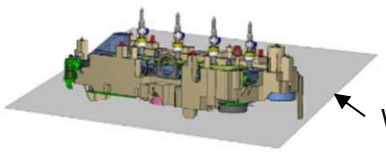 Work table

(4)Procedures for cleaning and fixing the contacts

This document covers the following 7 kinds of the contacts.

- Developer bias contacts and MC high voltage contacts (page 7-451)
- Primary transfer bias contacts and Primary transfer cleaning bias contacts and Secondary transfer current contact (page 7-452)
- Main high voltage contacts (Main high voltage PWB) (page 7-453)
- Transfer high voltage contacts (Transfer high voltage PWB) (page 7-454)

[Related Parts Location]

(Only the related parts viewed from the machine front right side)

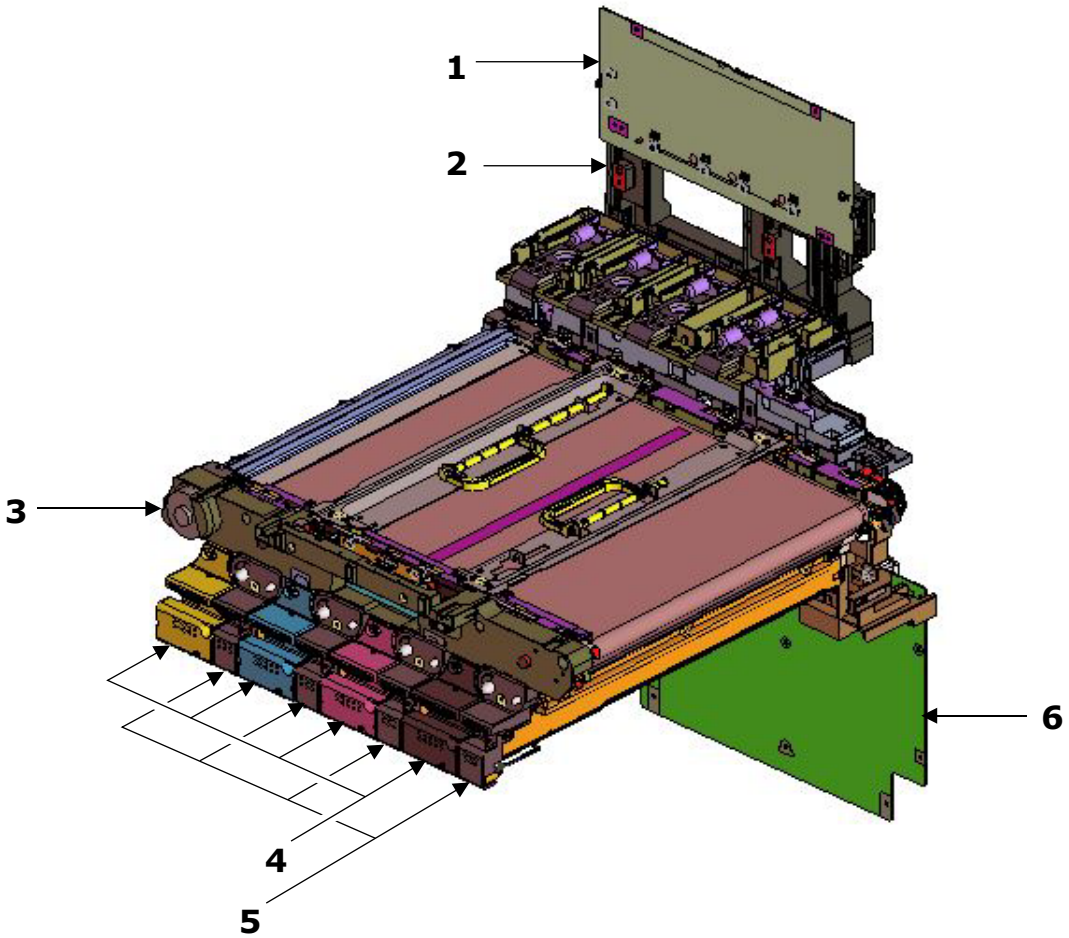

1. Transfer high-voltage PWB
2. Transfer terminal cover
3. Primary transfer unit
4. Developer unit
5. Drum unit
6. Main high-voltage PWB

Developer bias contacts and MC high voltage contacts

1. Detach the developer unit. (Refer to chapter 4 in Service Manual.)
2. Detach the drum unit. (Refer to chapter 4 in Service Manual.)
3. Clean the developer bias contact (**a**) and the MC high-voltage contact (**b**) at the rear side of the main unit inside with dry cloth. (**Fig.1**)
4. Clean the contact of the developer unit (**c**: It grounds to **a**) with dry cloth. (**Fig.2**)
5. Clean the contact (**d**: it grounds to **b**) of the main charger roller unit with dry cloth (**Fig.2**)
6. If the developer bias contact (**a**) is deformed, fix it so that it grounds the contact of the developer unit (**c**).

[**Fig.1**: Rear side of the main unit inside]

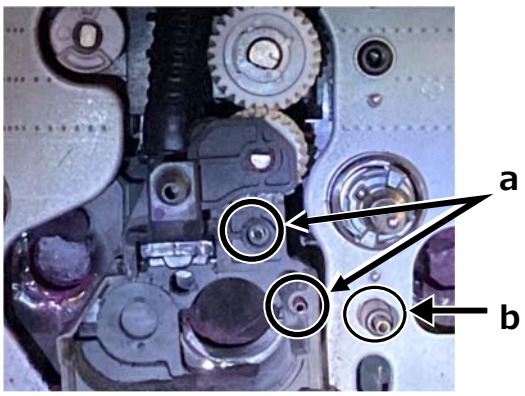

[**Fig.2**: Machine rear side of the drum unit and developer unit]

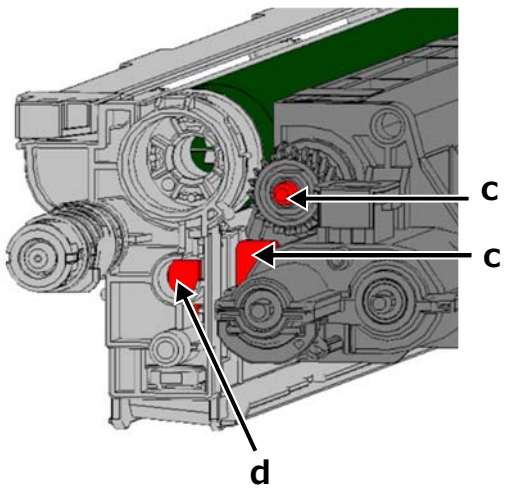

Primary transfer bias contacts and Primary transfer cleaning bias contacts and Secondary transfer current contact

1. Detach the primary transfer unit. (Refer to chapter 4 in Service Manual.)
2. Clean the following contacts at the rear side of the main unit inside with dry cloth. (**Fig.1**)
   - Primary transfer cleaning bias contacts (**a**: 2 parts)
   - Primary transfer bias contacts (**b:** 4 parts)
   - Secondary transfer current contact (**c**)
3. Clean 5 contacts (**d**) of the primary transfer unit with dry cloth. (**Fig.2**)
4. If a part of the above contacts (**a**, **b**, **c**) is deformed, fix the parts so that the contacts (**a**, **b**, **c**) securely ground to the contacts (**d**) of the primary transfer unit.

[**Fig.1**: Rear side of the main unit inside after detaching the primary transfer unit]

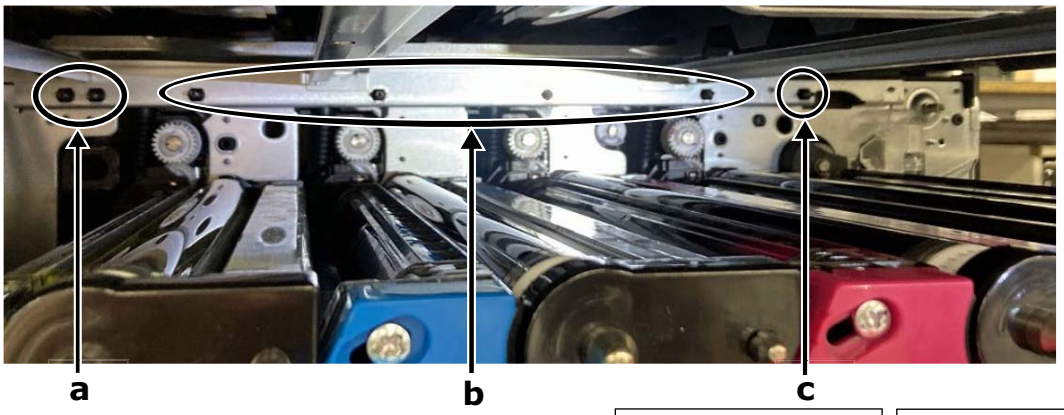

[**Fig.2**: Machine rear side of the primary transfer unit]

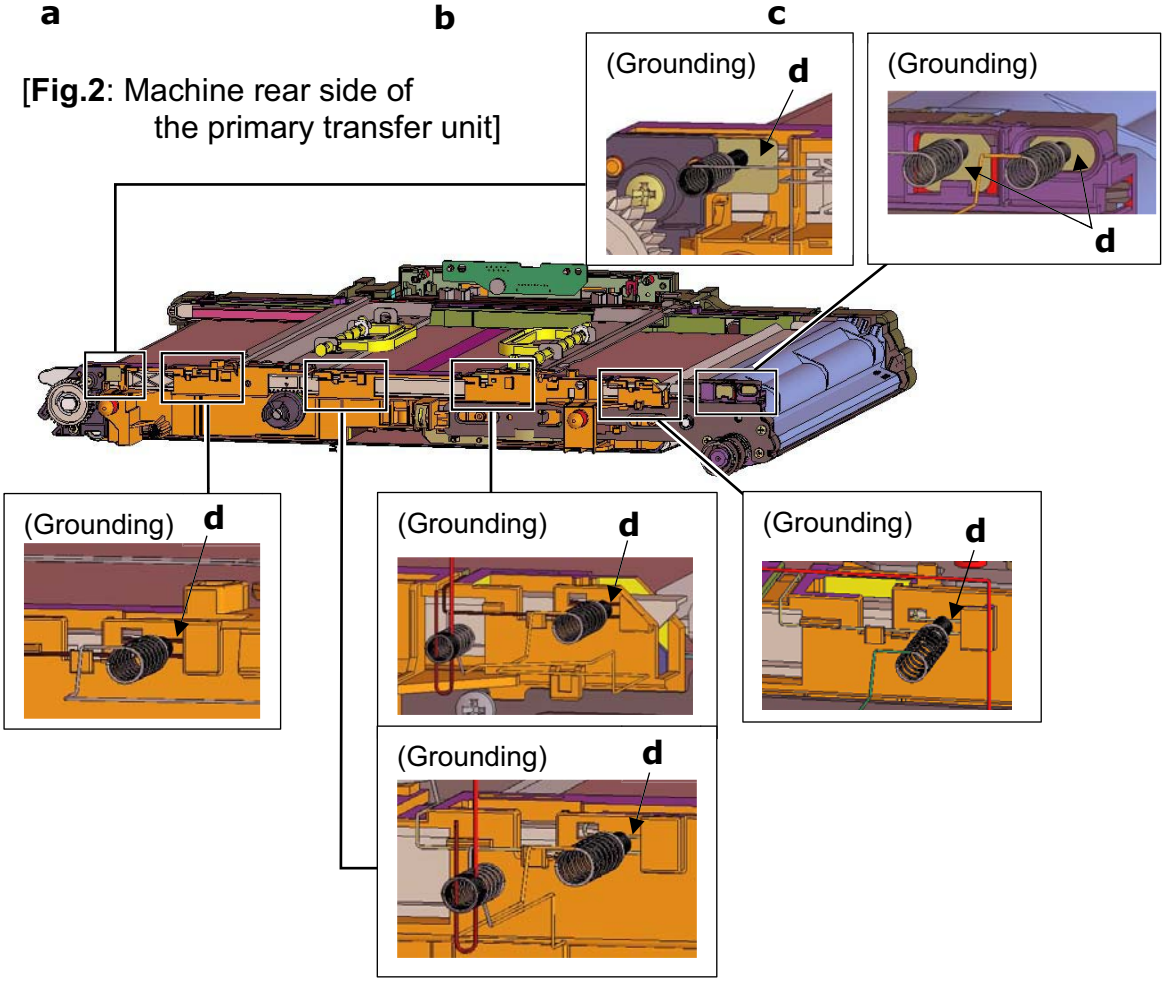

Main high voltage contacts (Main high voltage PWB)

1. Access the main high-voltage PWB (**a**). (Refer to chapter 4 in Service Manual.) (**Fig.1**)
2. Verify the following points. (**X** in **Fig.1**, **Fig.2**)
   - The contacts (**b**) at the upper part of the main high-voltage PWB and the contact springs (**c**) located at the back side of the PWB ground.
   - The surfaces where ground between the contacts (**b**) and the contact springs (**c**) are clean.
3. If these parts do not ground, reattach the main high-voltage PWB (**a**).
4. If the contact springs (**c**) are deformed, fix them so that the contact springs (**c**) ground the contacts (**b**).
5. If the surfaces where ground between the contacts (**b**) and the contact springs (**c**) are dirty, clean these parts with dry cloth.

[**Fig.1**: Main high-voltage PWB viewed from the machine rear side]

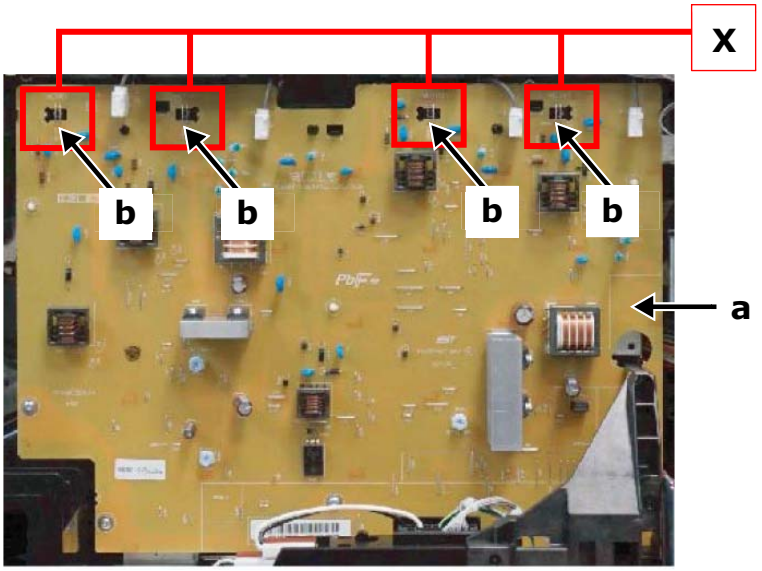

[**Fig.2**: Upper part of the main high-voltage PWB]

(View from the machine right front side)

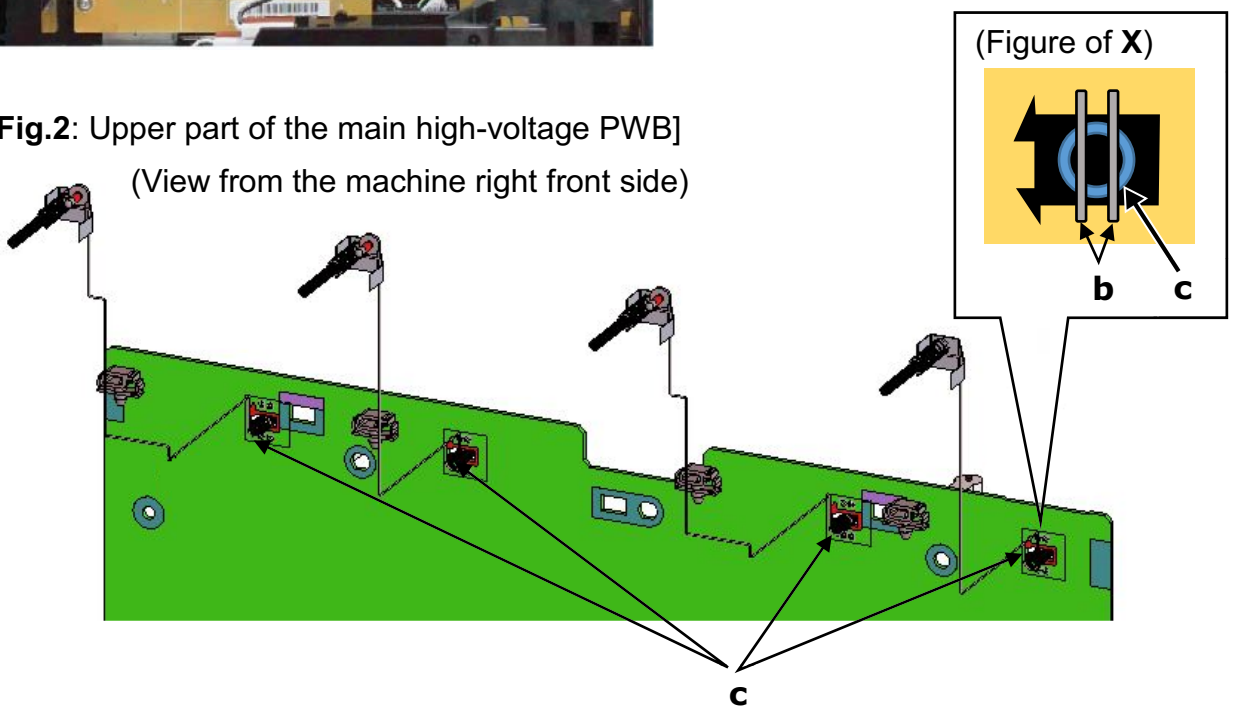

Transfer high voltage contacts (Transfer high voltage PWB)

1. Access the transfer high-voltage PWB (**a**). (Refer to chapter 4 in Service Manual.)
2. Verify the following point. (Refer to **X** in **Fig.1**, **Fig.2**)
   - The contacts (**b**) at the bottom part of the transfer high-voltage PWB and the contact springs (**c**) attached in the transfer terminal cover (**d**) ground.
   - The surfaces where ground between the contacts (**b**) and the contact springs (**c**) are clean.
3. If these parts do not ground, reattach the transfer high-voltage PWB (**a**) and the transfer terminal cover (**d**).
4. If the contact springs (**c**) are deformed, fix them so that the contact springs (**c**) ground the contacts (**b**).
   Also, reattach the transfer terminal cover (**d**) and the contact springs (**c**) if necessary. (**Fig.2**)
5. If the surfaces where ground between the contacts (**b**) and the contact springs (**c**) are dirty, clean these parts with dry cloth.

[**Fig.1**: Transfer high-voltage PWB viewed from the machine rear side]

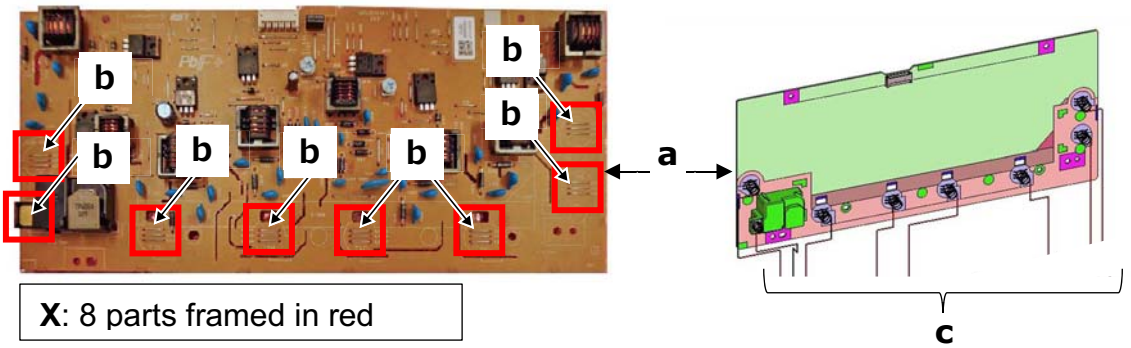

X: 8 parts framed in red

[**Fig.2**: Transfer high-voltage PWB and transfer terminal cover (Viewed from the machine right front side)]

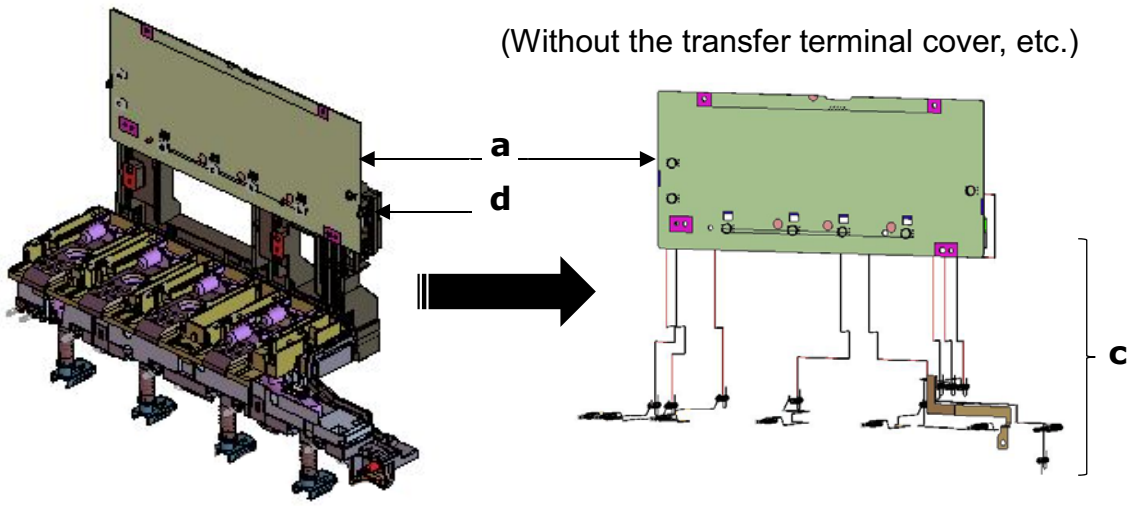

(5)Procedures for cleaning the shaft of the developer roller and DS pulleys

1. Detach the developer unit. (Refer to chapter 4 in Service Manual.)
2. Clean the machine rear end (**a**) of the shaft of the developer roller with dry cloth.
3. Clean the DS pulleys (**b**) at both sides of the developer unit with dry cloth.

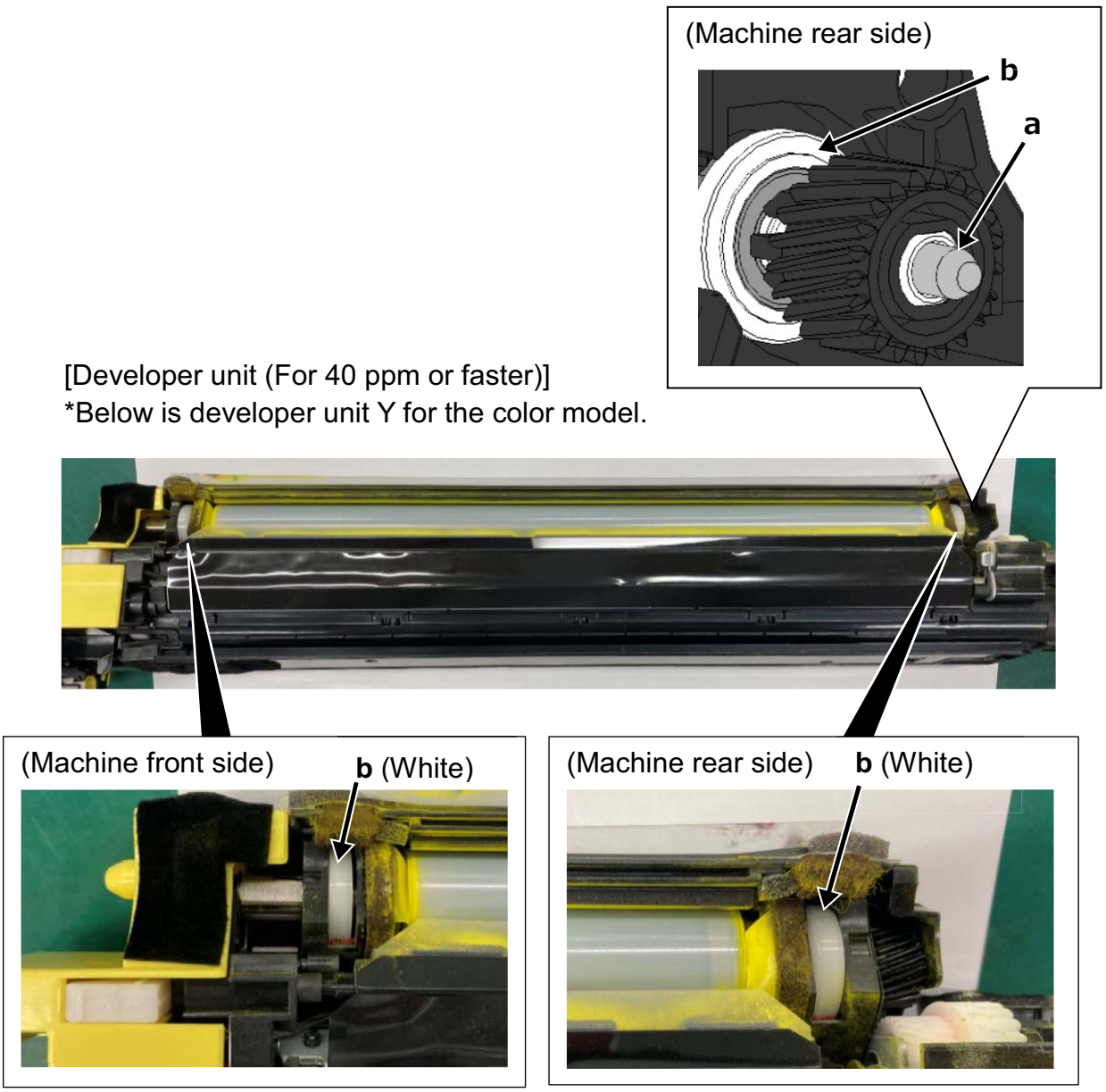

(6)Procedures for cleaning the LSU light path

Execute the following steps to remove foreign objects on the LSU light path.

1. Detach the developer units. (Refer to chapter 4 in Service Manual.)
2. Detach the drum units. (Refer to chapter 4 in Service Manual.)
3. Clean the light path apertures (**a**: 4 sections) at the left side of the drum heaters (**b**).

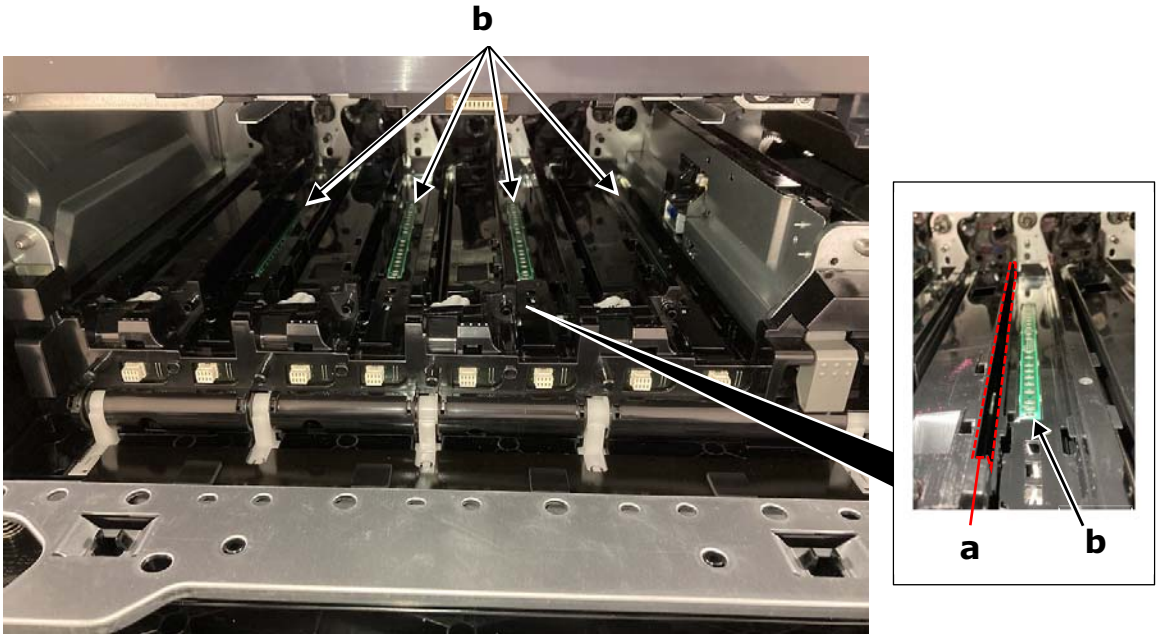

(7)Refastening the screw for fixing the ground plate

1. Open the right cover.
2. Refasten the screw (**a**) for fixing the ground plate near the arm (**b**) at the machine rear side of the right cover.

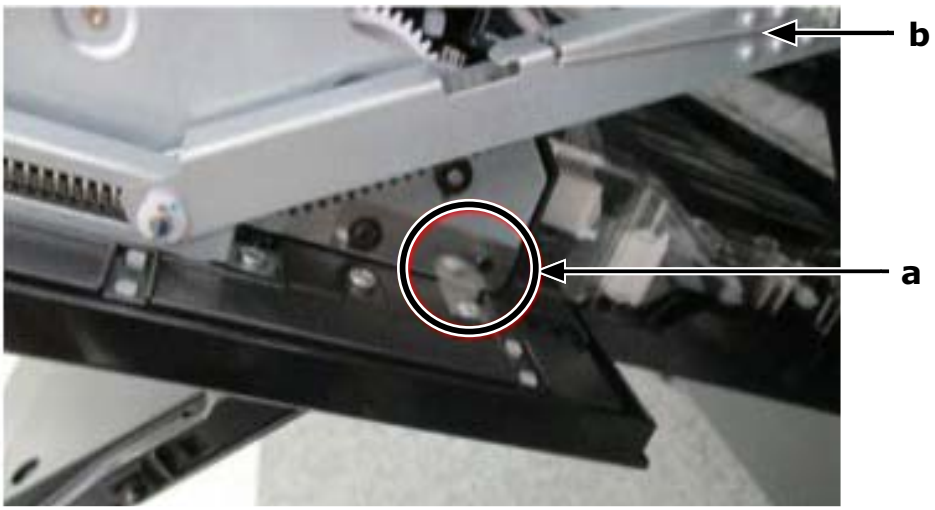

(8)Countermeasures for the original detection failure

In case if the original cannot be detected even the copy original is placed on the DP original tray, adjust the height of the DP by the following procedure.

1 Open the DP (A) top cover (1).

2 Remove the TP screw (2) x3 and screw (3) x1 and, detach the strap (4) from the rear cover (5) and remove the rear cover (5) of the DP (A).

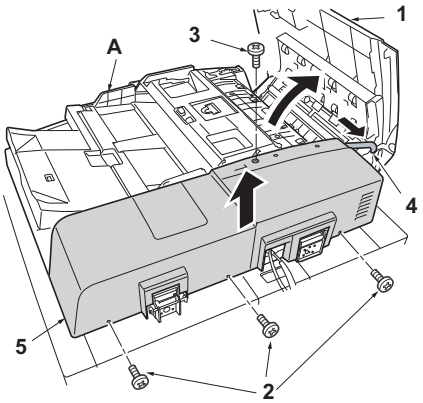

3 Adjust the height of the DP.

- Loosen the nut (6) at the B section.
- Tighten the adjustment screw (7). (Scale: 1mm)
- Tighten the nut (6) back.

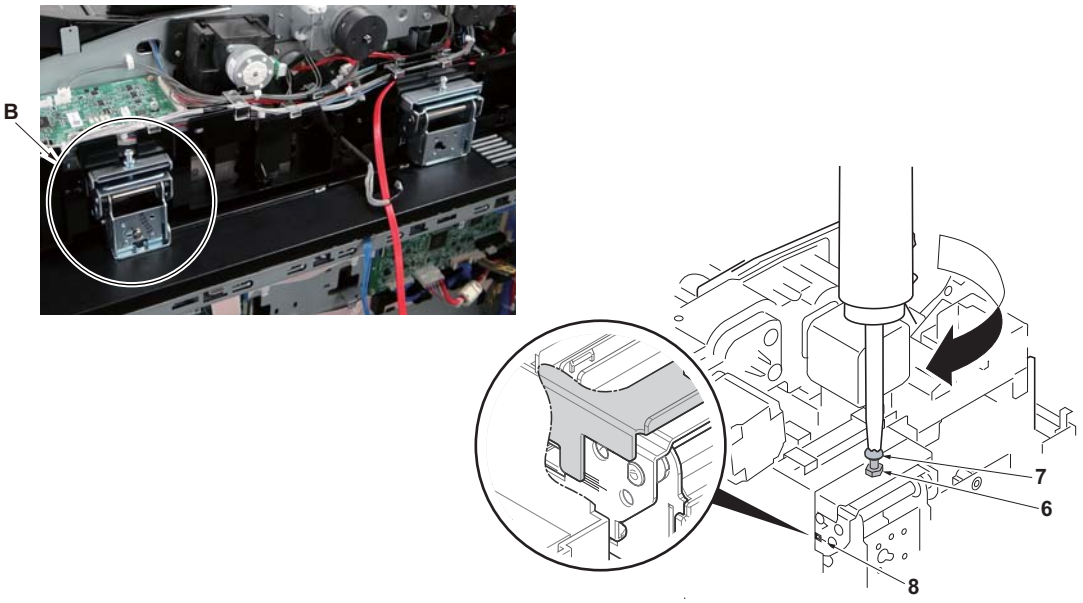

4 Reattach the rear cover (5) that has removed by the procedure 2 back to the original position.

8 PWBs

8 - 1 Description for PWB

(1)Main PWB

(1-1)PWB photograph



(1-2)Connector position

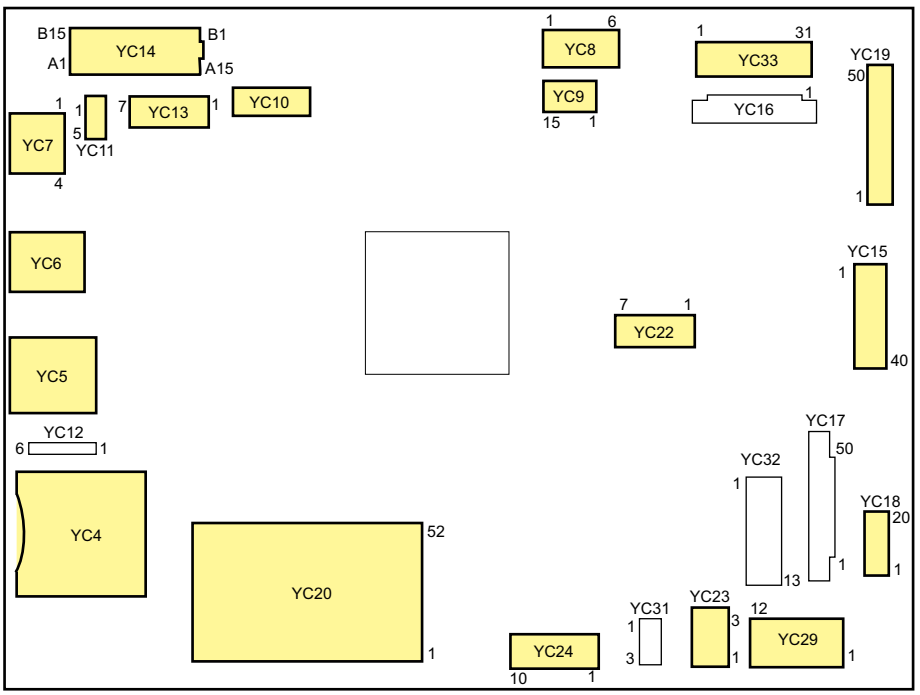

(1-3)Connector lists

Destination

- YC4: SD card
- YC5: Ethernet
- YC6: USB Device
- YC7: USB Host
- YC8: eKUIO relay PWB
- YC9: eKUIO relay PWB
- YC10: USB Hub PWB
- YC11: USB Hub PWB
- YC13: Operation panel main PWB(LCD)
- YC14: Operation panel main PWB, Power SW
- YC15: DP relay PWB
- YC17: APC PWB
- YC19: Engine PWB
- YC20: SSD
- YC22: HDD
- YC23: HDD
- YC29: Power supply PWB
- YC33: image sensor PWB

Connector	Pin	Signal	I/O	Voltage	Description
YC4	1	CD/DAT3	I/O	DC0V/3.3V (pulse)	SD card data signal
	2	CMD	I/O	DC0V/3.3V (pulse)	SD card command signal
	3	Vss	-	-	GND
	4	Vdd	O	DC3.3V	DC3.3V power output
	5	CLK	O	DC0V/3.3V (pulse)	SD card communication for clock
	6	Vss	-	-	GND
	7	DAT0	I/O	DC0V/3.3V (pulse)	SD card data signal
	8	DAT1	I/O	DC0V/3.3V (pulse)	SD card data signal
	9	DAT2	I/O	DC0V/3.3V (pulse)	SD card data signal
	10	CD	I	DC0V/3.3V	SD card detection signal
	11	COMMON	-	-	
	12	WP	I	DC0V/3.3V	Write-protect signal
	13	LockPin(1)	-	-	Lock terminal
	14	LockPin(2)	-	-	Lock terminal
	15	LockPin(3)	-	-	Lock terminal
	16	LockPin(4)	-	-	Lock terminal
YC5	1	TD1+	I/O	Differential -0.375/ 0.375V(1000BASE-T) Differential -0.5V/ +0.5V(100BASE-TX) Differential -1.25V/ +1.25V(10BASE-T)	Ethernet transmit / receive signal (P)

Connector	Pin	Signal	I/O	Voltage	Description
YC5	2	TD1-	I/O	Differential -0.375/ 0.375V(1000BASE-T) Differential -0.5V/ +0.5V(100BASE-TX) Differential -1.25V/ +1.25V(10BASE-T)	Ethernet transmit / receive signal (N)
	3	TD2+	I/O	Differential -0.375/ 0.375V(1000BASE-T) Differential -0.5V/ +0.5V(100BASE-TX) Differential -1.25V/ +1.25V(10BASE-T)	Ethernet transmit / receive signal (P)
	4	TD2-	I/O	Differential -0.375/ 0.375V(1000BASE-T) Differential -0.5V/ +0.5V(100BASE-TX) Differential -1.25V/ +1.25V(10BASE-T)	Ethernet transmit / receive signal (N)
	5	CT	-	-	Pulse transformer center tap
	6	CT	-	-	Pulse transformer center tap
	7	TD3+	I/O	Differential -0.375/ 0.375V(1000BASE-T) -(100BASE-TX) -(10BASE-T)	Ethernet transmit / receive signal (P)
	8	TD3-	I/O	Differential -0.375/ 0.375V(1000BASE-T) -(100BASE-TX) -(10BASE-T)	Ethernet transmit / receive signal (N)
	9	TD4+	I/O	Differential -0.375/ 0.375V(1000BASE-T) -(100BASE-TX) -(10BASE-T)	Ethernet transmit / receive signal (P)
	10	TD4-	I/O	Differential -0.375/ 0.375V(1000BASE-T) -(100BASE-TX) -(10BASE-T)	Ethernet transmit / receive signal (N)
YC6	1	VBUS	I	DC0V/5V	VBUS signal
	2	D-	I/O	Differential 0V/ 0.4V(High-speed) Differential 0V/ 3.3V(Full/Low-speed)	USB 2.0 data signal (N)
	3	D+	I/O	Differential 0V/ 0.4V(High-speed) Differential 0V/ 3.3V(Full/Low-speed)	USB 2.0 data signal (P)
	4	GND	-	-	GND
	5	STDB_SSTX-	O	Differential 0.8V/ 1.2V(Super-speed) -(High-speed) -(Full/Low-speed)	USB 3.0 transmission data signal (N)

Connector	Pin	Signal	I/O	Voltage	Description
YC6	6	STDB_SSTX+	O	Differential 0.8V/ 1.2V(Super-speed) -(High-speed) -(Full/Low-speed)	USB 3.0 transmission data signal (P)
	7	GND	-	-	GND
	8	STDB_SSRX-	I	Differential 0.8V/ 1.2V(Super-speed) -(High-speed) -(Full/Low-speed)	USB 3.0 received data signal (N)
	9	STDB_SSRX+	I	Differential 0.8V/ 1.2V(Super-speed) -(High-speed) -(Full/Low-speed)	USB 3.0 received data signal (P)
YC7	1	VBUS	O	DC5V	DC5V power output
	2	D-	I/O	Differential 0V/ 0.4V(High-speed) Differential 0V/ 3.3V(Full/Low-speed)	USB data signal (N)
	3	D+	I/O	Differential 0V/ 0.4V(High-speed) Differential 0V/ 3.3V(Full/Low-speed)	USB data signal (P)
	4	GND	-	-	GND
YC8	1	GND	-	-	GND
	2	5V_CUT	O	DC5V	DC5V power output (OFF during sleep)
	3	GND	-	-	GND
	4	5V	O	DC5V	DC5V power output
	5	GND	-	-	GND
	6	5V_CUT	O	DC5V	DC5V power output (OFF during sleep)
YC9	1	VBUS1	O	DC0V/5V	VBUS EN signal
	2	USB_DN1	I/O	Differential 0V/ 0.4V(High-speed) Differential 0V/ 3.3V(Full/Low-speed)	USB data signal (N)
	3	USB_DP1	I/O	Differential 0V/ 0.4V(High-speed) Differential 0V/ 3.3V(Full/Low-speed)	USB data signal (P)
	4	GND	-	-	GND
	5	AUDIO1	I	Analog	FAX sound signal
	6	WAKEUP1	I	DC0V/3.3V	Return request signal
	7	RESET1	O	DC0V/3.3V	Reset signal
	8	GND	-	-	GND
	9	VBUS0	O	DC0V/5V	VBUS EN signal
	10	USB_DN0	I/O	Differential 0V/ 0.4V(High-speed) Differential 0V/ 3.3V(Full/Low-speed)	USB data signal (N)
	11	USB_DP0	I/O	Differential 0V/ 0.4V(High-speed) Differential 0V/ 3.3V(Full/Low-speed)	USB data signal (P)

Connector	Pin	Signal	I/O	Voltage	Description
YC9	12	GND	-	-	GND
	13	AUDIO0	I	Analog	FAX sound signal
	14	WAKEUP0	I	DC0V/3.3V	Return request signal
	15	RESET0	O	DC0V/3.3V	Reset signal
YC10	1	+5.0V13_USBHUB	O	DC5V	DC5V power output
	2	+5.0V13_USBHUB	O	DC5V	DC5V power output
	3	+5.0V13_USBHUB	O	DC5V	DC5V power output
	4	GND	-	-	GND
	5	GND	-	-	GND
	6	GND	-	-	GND
YC11	1	VBUS	O	DC5V	DC5V power output
	2	D-	I/O	Differential 0V/ 0.4V(High-speed) Differential 0V/ 3.3V(Full/Low-speed)	USB data signal (N)
	3	D+	I/O	Differential 0V/ 0.4V(High-speed) Differential 0V/ 3.3V(Full/Low-speed)	USB data signal (P)
	4	ID	I	DC0V/3.3V (pulse)	LAN sleep return interrupt signal
	5	GND	-	-	GND
YC13	1	GND	-	-	GND
	2	LCD_OFF	O	DC0V/3.3V	LCD connect PWB LDO control signal
	3	LOCKN	I	DC0V/3.3V	Sync detection
	4	GND	-	-	GND
	5	TX0N	O	Differential 1.05V/1.35V	Transmission data signal (N)
	6	TX0P	O	Differential 1.05V/1.35V	Transmission data signal (P)
	7	GND	-	-	GND
YC14	A1	I2C_SCL_NFC	O	DC0V/3.3V (pulse)	I2C clock signal
	A2	+3.3V3_ASIC	O	DC3.3V	DC3.3V power output
	A3	C2P_RST	O	DC0V/3.3V	Panel reset signal
	A4	P2C_SDAT	I	DC0V/3.3V (pulse)	SSI received data signal
	A5	C2P_SDAT	O	DC0V/3.3V (pulse)	SSI transmission data signal
	A6	P2C_SDIR	I	DC0V/3.3V	SSI communication direction control signal
	A7	P2C_SBSY	I	DC0V/3.3V	SSI busy signal
	A8	C2P_SCK	O	DC0V/3.3V (pulse)	SSI communication clock
	A9	P2C_WKUP_RDY	O	DC0V/3.3V	Panel ready information
	A10	GND	-	-	GND
	A11	+5.0V1_PANEL	O	DC 5 V	DC5V power output
	A12	+5.0V1_PANEL	O	DC 5 V	DC5V power output
	A13	+5.0V1_PANEL	O	DC 5 V	DC5V power output
	A14	+5.0V1_PANEL	O	DC 5 V	DC5V power output
	A15	NC	-	-	NC
	B1	POWER_SW	I	DC0V/3.3V	Power supply button ON/OFF signal
	B2	GND	-	-	GND
	B3	+5.0V1_PANEL	O	DC 5 V	DC5V power output
	B4	JS_LED_REM	O	DC0V/5V	JS LED lighting signal

Connector	Pin	Signal	I/O	Voltage	Description
YC14	B5	GND	-	-	GND
	B6	+3.3V1_HD	O	DC3.3V	DC3.3V power output
	B7	GND	-	-	GND
	B8	INT_HUMAN_DETECT	I	DC0V/3.3V	Motion sensor detection interrupt signal
	B9	LED_ATTENTION	O	DC0V/3.3V	Attention LED control signal
	B10	LED_PROCESSING	O	DC0V/3.3V	Processing LED control signal
	B11	AUDIO	O	Analog	Sound signal
	B12	C2P_WKUP	O	DC0V/3.3V	Panel return signal
	B13	GND	-	-	GND
	B14	NIRQ	I	DC0V/1.8V	NFC interrupt signal
	B15	I2C_SDA_NFC	I/O	DC0V/3.3V (pulse)	I2C address/ data signal
YC15	1	DP_RST_N	O	DC0V/DC3.3V-	DP relay PWB system reset
	2	GND(DP_CONNECTN)	I	DC0V/1.8V	DP relay PWB connect detection signal (L：detection)
	3	GND	-	-	GND
	4	PCIEP_REFCLK_DP2M	I	Differential 0V/0.8V	PCIe reference clock input (P)
	5	PCIEN_REFCLK_DP2M	I	Differential 0V/0.8V	PCIe reference clock input (N)
	6	GND	-	-	GND
	7	GND	-	-	GND
	8	PCIEP_M2DP	O	Differential 0.65V/1.15V	PCIe transmission data signal (P)
	9	PCIEN_M2DP	O	Differential 0.65V/1.15V	PCIe transmission data signal (N)
	10	GND	-	-	GND
	11	GND	-	-	GND
	12	PCIEP_DP2M	I	Differential 0.65V/1.15V	PCIe received data signal (P)
	13	PCIEN_DP2M	I	Differential 0.65V/1.15V	PCIe received data signal (N)
	14	GND	-	-	GND
	15	GND	-	-	GND
	16	+3.3V3_ASIC	O	DC3.3V	DC3.3V power output
	17	EUSS_CLK0	-	DC0V/3.3V (Pulse)	EUSS Scan
	18	EUSS_SDO0	-	DC0V/3.3V (Pulse)	EUSS Scan
	19	EUSS_SDI0	-	DC0V/3.3V (Pulse)	EUSS Scan
	20	EUSS_EN0	-	DC0V/3.3V	EUSS Scan
	21	5.0V4	O	DC5V	DC5V power output
	22	5.0V4	O	DC5V	DC5V power output
	23	5.0V4	O	DC5V	DC5V power output
	24	5.0V4	O	DC5V	DC5V power output
	25	5.0V4	O	DC5V	DC5V power output
	26	5.0V4	O	DC5V	DC5V power output
	27	5.0V4	O	DC5V	DC5V power output
	28	5.0V4	O	DC5V	DC5V power output
	29	GND	-	-	GND
	30	GND	-	-	GND
	31	GND	-	-	GND
	32	GND	-	-	GND
	33	GND	-	-	GND
	34	GND	-	-	GND
	35	GND	-	-	GND

Connector	Pin	Signal	I/O	Voltage	Description
YC15	36	GND	-	-	GND
	37	PCIERC_SWRST_N_M2DP	O	DC0V/DC3.3V-	PCIe reset
	38	SCAN_READY	I	DC0V/3.3V	Device ready information (DP)
	39	EUSS_INT0	I	DC0V/3.3V	EUSS Video communication successful completion notification INT
	40	EUSS_CS0	-	DC0V/3.3V	EUSS Scan
	Pow 1	5.0V4	O	DC5V	DC5V power output
	Pow 2	GND	-	-	GND
	Pow 3	5.0V4	O	DC5V	DC5V power output
	Pow 4	GND	-	-	GND
YC17	1	DATAN2_C	O	Differential 1.03V/1.37V	Data C CH2 (N)
	2	DATAN2_C	O	Differential 1.03V/1.37V	Data C CH2 (P)
	3	GND	-	-	GND
	4	DATAN1_C	O	Differential 1.03V/1.37V	Data C CH1 (N)
	5	DATAN1_C	O	Differential 1.03V/1.37V	Data C CH1 (P)
	6	GND	-	-	GND
	7	DATAN2_Y	O	Differential 1.03V/1.37V	Data Y CH2 (N)
	8	DATAN2_Y	O	Differential 1.03V/1.37V	Data Y CH2 (P)
	9	GND	-	-	GND
	10	DATAN1_Y	O	Differential 1.03V/1.37V	Data Y CH1 (N)
	11	DATAN1_Y	O	Differential 1.03V/1.37V	Data Y CH1 (P)
	12	GND	-	-	GND
	13	SH	O	DC0V/3.3V	SH signal
	14	GND	-	-	GND
	15	ENB_COL	O	DC0V/3.3V	M/C/Y ENB signal
	16	GND	-	-	GND
	17	ENB_BK	O	DC0V/3.3V	BK EN signal
	18	I2C_SDA_KMCY	-	-	I2C address/data signal
	19	Pull-Down/GND	I	DC0V/3.3V	Pull down
	20	I2C_SCL_KMCY	-	-	I2C clock signal
	21	Pull-Down	O	DC0V/3.3V	Pull down
	22	SELECT	O	DC0V/3.3V	Select signal
	23	GND	I	DC0V/3.3V	GND
	24	Pull-Down	O	DC0V/3.3V	Pull down
	25	Pull-Down	O	DC0V/3.3V	Pull down
	26	3.3V4	O	DC0V/3.3V	3.3V Power source
	27	Pull-Down	O	DC0V/3.3V(Pulse)	Pull down
	28	GND	-	-	GND
	29	DATAP1_K	O	Differential 1.03V/1.37V	Data BK CH1 (P)
	30	DATAN1_K	O	Differential 1.03V/1.37V	Data BK CH1 (N)
	31	GND	-	-	GND
	32	DATAP2_K	O	Differential 1.03V/1.37V	Data BK CH2 (P)
	33	DATAN2_K	O	Differential 1.03V/1.37V	Data BK CH2 (N)
	34	GND	-	-	GND

Connector	Pin	Signal	I/O	Voltage	Description
YC17	35	VCONT_Y	O	Analog	Y current control signal
	36	VCONT_C	O	Analog	C current control signal
	37	VCONT_M	O	Analog	M current control signal
	38	VCONT_K	O	Analog	BK current control signal
	39	BD	I	DC0V/5V	BD signal
	40	POL_REM	O	DC0V/3.3V	Polygon motor REM signal
	41	POL_RDY	I	DC0V/3.3V	Polygon motor RDY signal
	42	POL_CLK	O	DC0V/5V	Polygon motor CLK signal
	43	GND	-	-	GND
	44	LSU_TH	I	Analog	LSU thermistor
	45	GND	-	-	GND
	46	DATAP1_M(DATAP3_K)	O	Differential 1.03V/1.37V	Data M CH1 (P) / DATAP3_K
	47	DATAN1_M(DATAN3_K)	O	Differential 1.03V/1.37V	Data M CH1 (N) / DATAN3_K
	48	GND	-	-	GND
	49	DATAP2_M(DATAP4_K)	O	Differential 1.03V/1.37V	Data M CH2 (P) / DATAP4_K
	50	DATAN2_M(DATAN4_K)	O	Differential 1.03V/1.37V	Data M CH2 (N) / DATAN4_K
YC19	1	5V4IL_LSU	O	DC5V	Interlock power supply 5V
	2	NC			
	3	NC(E2C_WKUP_BGD)	I	DC0V/3.3V	Engine buck ground return information
	4	LSU_TH	O	Analog	LSU ambient temperature detection
	5	NC(C2E_DUTY_CONTROL)	O	DC0V/3.3V	Power supplyOFF/ON control signal
	6	GND			GND
	7	E2C_EUSS_VIDEO_CLK	I	DC0V/3.3V (pulse)	EUSS Video
	8	GND			GND
	9	C2E_EUSS_VIDEO_SDI	O	DC0V/3.3V	EUSS Video
	10	E2C_EUSS_VIDEO_SDO	I	DC0V/3.3V	EUSS Video
	11	C2E_EUSS_VIDEO_INT	O	DC0V/3.3V	EUSS Video communication Successful completion notification INT
	12	C2E_VIDEO_INT	O	DC0V/3.3V	Write device status notification
	13	C2E_ENG_WKUP_REQ /C2E_QUICK_START_N	O	DC0V/3.3V	Engine sleep return
	14	C2E_WKUP_MONO	O	DC0V/3.3V(pulse)	Mono WU switching
	15	E2C_EUSS_VIDEO_CS	I	DC0V/3.3V	EUSS Video CS
	16	E2C_EUSS_VIDEO_EN	I	DC0V/3.3V	EUSS Video EN
	17	HVU_SYNC_CLK	O	DC0V/3.3V(pulse)	HVUSYNC relay
	18	E2C_VSYNC_CONT	I	DC0V/3.3V	VSYNC input
	19	E2C_DP_WAKEUP_REQ	I	DC0V/3.3V	DP original set notification
	20	C2E_ENG_POWOFF_N	O	DC0V/3.3V	Engine_power supplyOFF (V0 system included)
	21	E2C_G6_SDIR	I	DC0V/3.3V	G6 direction switch DIR
	22	C2E_HLDENG_N	O	DC0V/3.3V	Engine hold when returning from Sleep
	23	E2C_G6_SBSY	I	DC0V/3.3V	G6 permission BSY
	24	C2E_G6_SDAT	I	DC0V/3.3V	G6
	25	E2C_G6_IR	I	DC0V/3.3V	G6 communication reqest IR
	26	C2E_G6_SCLK	O	DC0V/3.3V	G6
	27	E2C_G6_SDAT	I	DC0V/3.3V	G6
	28	C2E_HLDSCN_N	O	DC0V/3.3V	Scan hold when returning from Sleep

Connector	Pin	Signal	I/O	Voltage	Description
YC19	29	E2C_SCAN_DP_PAGEST	I	DC0V/3.3V	Sub-scan reading start Timing notification PAGEST (DP)
	30	E2C_SCAN_TABLE_PAGEST	I	DC0V/3.3V	Sub-scan reading start Timing notification PAGEST (body)
	31	E2C_EUSS_SCAN_DP_CS	I	DC0V/3.3V	EUSS scan CS (DP)
	32	E2C_EUSS_SCAN_TABLE_CS	I	DC0V/3.3V	EUSS scan CS (Main unit)
	33	E2C_EUSS_SCAN_EN	I	DC0V/3.3V	EUSS scan EN
	34	C2E_SCAN_DP_RDY	O	DC0V/3.3V	Device ready notification (DP)
	35	C2E_SCAN_TABLE_RDY	O	DC0V/3.3V	Read device ready notification (main unit) (also used as write device)
	36	C2E_SCAN_OVM	O	DC0V/3.3V	Read device status notification OVM (Trigger to end white reference confirmation, etc.)
	37	E2C_EUSS_SCAN_SDO	I	DC0V/3.3V	EUSS scan
	38	C2E_EUSS_SCAN_INT	O	DC0V/3.3V	EUSS scan communication normal completion notification INT
	39	GND			GND
	40	E2C_EUSS_SCAN_CLK	I	DC0V/3.3V (pulse)	EUSS scan
	41	GND			GND
	42	C2E_EUSS_SCAN_SDI	O	DC0V/3.3V	EUSS scan
	43	JS_LED_REM	I	DC0V/3.3V	JS LED drive
	44	NC(+3.3V1)		DC3.3V	Pull down (3.3V at all times)
	45	NC	-	-	Not used
	46	+5V2	O	DC5V	image sensor power supply
	47	+5V2	O	DC5V	image sensor power supply
	48	NC	-	-	Not used
	49	12V5_F1	O	DC12V	image sensor power supply
	50	12V5_F1	O	DC12V	image sensor power supply
	LP-1	Lockpin(1)		-	Lock terminal
	LP-2	Lockpin(2)		-	Lock terminal
YC20	1	NC	-	-	NC
	2	3.3V	O	DC3.3V	DC3.3V power output
	3	NC	-	-	NC
	4	GND	-	-	GND
	5	NC	-	-	NC
	6	NC	-	-	NC
	7	NC	-	-	NC
	8	NC	-	-	NC
	9	GND	-	-	GND
	10	NC	-	-	NC
	11	NC	-	-	NC
	12	NC	-	-	NC
	13	NC	-	-	NC
	14	NC	-	-	NC
	15	GND	-	-	GND
	16	NC	-	-	NC

Connector	Pin	Signal	I/O	Voltage	Description
YC20	17	NC	-	-	NC
	18	GND	-	-	GND
	19	NC	-	-	NC
	20	NC	-	-	NC
	21	GND	-	-	GND
	22	NC	-	-	NC
	23	TxP	O	Differential 0V/0.5V	SSD data reception signal (P)
	24	3.3V	O	DC3.3V	DC3.3V power output
	25	TxN	O	Differential 0V/0.5V	SSD data reception signal (N)
	26	GND	-	-	GND
	27	GND	-	-	GND
	28	NC	-	-	NC
	29	GND	-	-	GND
	30	NC	-	-	NC
	31	RxN	I	Differential 0V/0.5V	SSD data transmission signal (P)
	32	NC	-	-	NC
	33	RxP	I	Differential 0V/0.5V	SSD data transmission signal (N)
	34	GND	-	-	GND
	35	GND	-	-	GND
	36	NC	-	-	NC
	37	GND	-	-	GND
	38	NC	-	-	NC
	39	3.3V	O	DC3.3V	DC3.3V power output
	40	GND	-	-	GND
	41	3.3V	O	DC3.3V	DC3.3V power output
	42	NC	-	-	NC
	43	NC	-	-	NC
	44	NC	-	-	NC
	45	NC	-	-	NC
	46	NC	-	-	NC
	47	NC	-	-	NC
	48	NC	-	-	NC
	49	NC	-	-	NC
	50	GND	-	-	GND
	51	GND	-	-	GND
	52	3.3V	O	DC3.3V	DC3.3V power output
	LP-1	Lockpin(1)		-	Lock terminal
	LP-2	Lockpin(2)		-	Lock terminal
YC22	1	GND	-	-	GND
	2	SATATXDP_C2H	O	Differential 0V/0.5V	HDD data transmission signal (P)
	3	SATATXDN_C2H	O	Differential 0V/0.5V	HDD data transmission signal (N)
	4	GND	-	-	GND
	5	SATARXDN_H2C	I	Differential 0V/0.5V	HDD data reception signal (N)
	6	SATARXDP_H2C	I	Differential 0V/0.5V	HDD data reception signal (P)
	7	GND	-	-	GND
YC23	1	HDD_CONNECT_N	I	DC0V/3.3V	HDD option recognition signal
	2	+5.0V4_HDD	O	DC5V	DC5V power output

Connector	Pin	Signal	I/O	Voltage	Description
	3	GND	-	-	GND
YC29	1	5V	I	DC5V	DC5V power input
	2	GND	-	-	GND
	3	5V	I	DC5V	DC5V power input
	4	GND	-	-	GND
	5	5V	I	DC5V	DC5V power input
	6	GND	-	-	GND
	7	5V	I	DC5V	DC5V power input
	8	GND	-	-	GND
	9	5V	I	DC5V	DC5V power input
	10	GND	-	-	GND
YC33	1	+12V5	O	DC12V	12V power input
	2	+12V5	O	DC12V	12V power input
	3	+12V5	O	DC12V	12V power input
	4	+12V5	O	DC12V	12V power input
	5	NC(PD)	-	-	NC (pull-down)
	6	LED_PWM	O	DC0V/3.3V	LED lighting control signal
	7	GND	-	-	GND
	8	GND	-	-	GND
	9	AFE_HSYNC_N	O	-	Timing signal
	10	AFE_HSYNC_P	O	-	Timing signal
	11	GND	-	-	GND
	12	LOCKN	I	DC0V/3.3V	Sync detection
	13	GND	-	-	GND
	14	image sensor_VBO_P	O	Differential 1.05V/1.35V	SEnd data signal (P)
YC33	15	image sensor_VBO_N	O	Differential 1.05V/1.35V	SEnd data signal (N)
	16	GND	-	-	GND
	17	AFE_RD	I	DC0V/3.3V	Panther - AFE serial communication read signal
	18	GND	-	-	GND
	19	AFE_WD	O	DC0V/3.3V	Panther - AFE serial communication write signal
	20	GND	-	-	GND
	21	AFE_CLK	O	DC0V/3.3V	Panther - AFE serial communication CLK signal
	22	GND	-	-	GND
	23	AFE_CS	O	DC0V/3.3V	Panther - AFE serial communication CS signal
	24	GND	-	-	GND
	25	AFE_MCLK_P	O	Differential 1.03V/1.37V	AFE master CLK differential signal positive
	26	AFE_MCLK_N	O	Differential 1.03V/1.37V	AFE master CLK differential signal negative
	27	GND	-	-	GND
	28	NC(PD)	-	-	NC (pull-down)
	29	+5V2	O	DC5V	5V power input
	30	+5V2	O	DC5V	5V power input
	31	+5V2	O	DC5V	5V power input
	LP-1	Lockpin(1)	-	-	Lock terminal

Connector	Pin	Signal	I/O	Voltage	Description
	LP-2	Lockpin(2)	-	-	Lock terminal
	LP-3	Lockpin(3)	-	-	Lock terminal
	LP-4	Lockpin(4)	-	-	Lock terminal
	LP-5	Lockpin(5)	-	-	Lock terminal
	LP-6	Lockpin(6)	-	-	Lock terminal
	LP-7	Lockpin(7)	-	-	Lock terminal
	LP-8	Lockpin(8)	-	-	Lock terminal

(2) Engine PWB

(2-1)PWB photograph

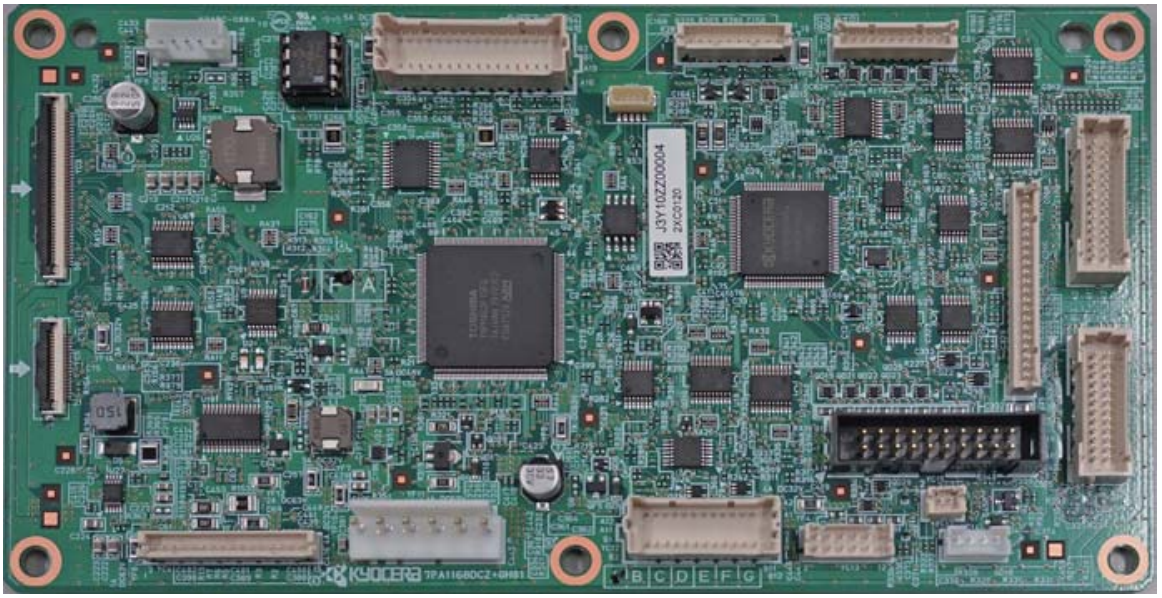

(2-2)Connector position

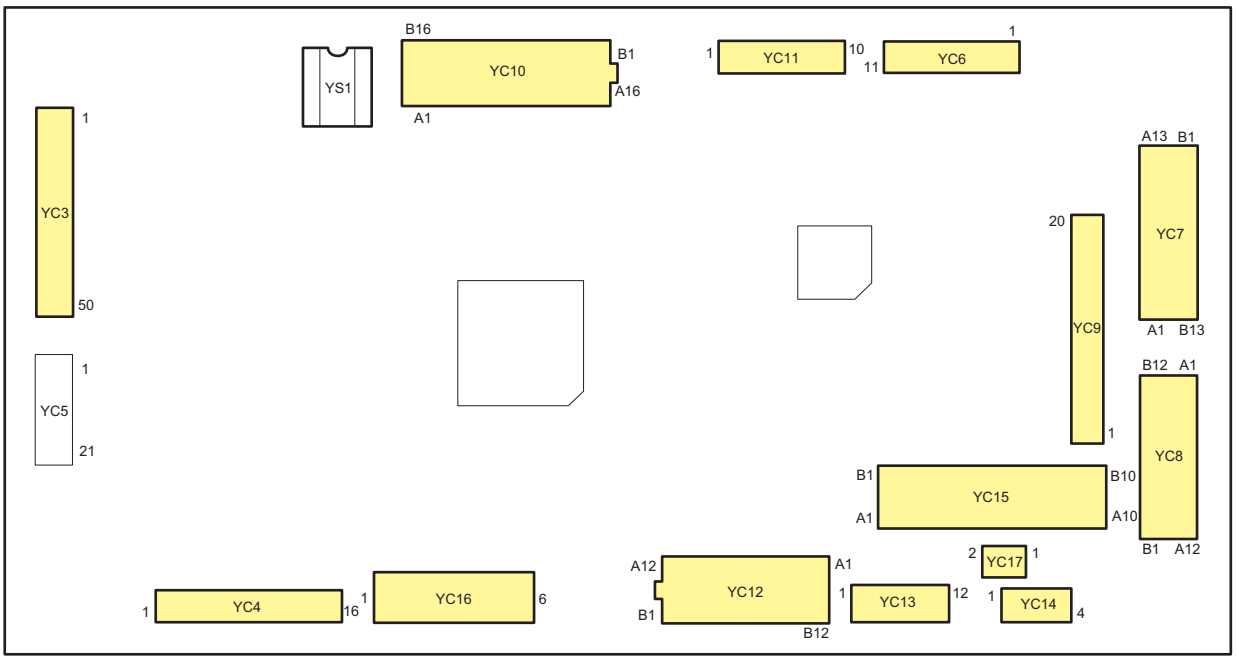

(2-3)Connector lists

Destination

- YC3: Main PWB
- YC4: APC PWB, Waste toner motor, Power supply PWB, Weight detection sensor
- YC6: Transfer high voltage PWB
- YC7: Feed Drive PWB
- YC8: Image drive PWB
- YC9: Image drive PWB
- YC10: DP, Home position sensor, Original size sensor, Original size timing sensor, Scanner motor
- YC11: IH PWB
- YC12: PF, Power supply PWB, Temperature/humidity sensor
- YC13: Coin vender/Inserter
- YC14: Key Card/Counter
- YC15: Key Card MK2
- YC16: Power supply PWB
- YC17: Inserter

Connector	Pin	Signal	I/O	Voltage	Description
YC3	1	+12V5_F1	O	12V	Power supply
	2	+12V5_F1	O	12V	Power supply
	3	NC	-	-	NC
	4	+5V2_F1	O	5V	Power supply
	5	+5V2_F1	O	5V	Power supply
	6	NC	-	-	NC
	7	NC	-	-	NC
	8	JS_LED_REM	O	0V/5V	Drive signal
	9	C2E_EUSS_SCAN_SDI	I	0V/3.3V	Communication signal
	10	GND	-	-	GND
	11	E2C_EUSS_SCAN_CLK	O	0V/3.3V	Communication signal
	12	GND	-	-	GND
	13	C2E_EUSS_SCAN_INT	I	0V/3.3V	Communication signal
	14	E2C_EUSS_SCAN_SDO	O	0V/3.3V	Communication signal
	15	C2E_SCAN_OVM	I	0V/3.3V	Control signal
	16	C2E_SCAN_TABLE_RDY	I	0V/3.3V	Control signal
	17	C2E_SCAN_DP_RDY	I	0V/3.3V	Control signal
	18	E2C_EUSS_SCAN_EN	O	0V/3.3V	Communication signal
	19	E2C_EUSS_SCAN_TABLE_CS	O	0V/3.3V	Communication signal
	20	E2C_EUSS_SCAN_DP_CS	O	0V/3.3V	Communication signal
	21	E2C_SCAN_TABLE_PAGEST	O	0V/3.3V	Control signal
	22	E2C_SCAN_DP_PAGEST	O	0V/3.3V	Control signal
	23	C2E_HLDSCN_N	I	0V/3.3V	Control signal

Connector	Pin	Signal	I/O	Voltage	Description
YC3	24	E2C_G6_SDAT	O	0V/3.3V	Communication signal
	25	C2E_G6_SCLK	I	0V/3.3V	Communication signal
	26	E2C_G6_IR	O	0V/3.3V	Communication signal
	27	C2E_G6_SDAT	I	0V/3.3V	Communication signal
	28	E2C_G6_SBSY	O	0V/3.3V	Communication signal
	29	C2E_HLDENG_N	I	0V/3.3V	Control signal
	30	E2C_G6_SDIR	O	0V/3.3V	Communication signal
	31	C2E_ENG_POWOFF_N	I	0V/5V	Control signal
	32	E2C_DP_WKUP_REQ	O	0V/3.3V	Control signal
	33	E2C_VSYNC_CONT	O	0V/3.3V	Control signal
	34	HVU_SYNC_CLK	I	0V/3.3V	Control signal
	35	E2C_EUSS_VIDEO_EN	O	0V/3.3V	Communication signal
	36	E2C_EUSS_VIDEO_CS	O	0V/3.3V	Communication signal
	37	C2E_WKUP_MONO	I	0V/3.3V	Control signal
	38	C2E_ENG_WKUP_REQ	I	0V/3.3V	Control signal
	39	C2E_VIDEO_INT	I	0V/3.3V	Control signal
	40	C2E_EUSS_VIDEO_INT	I	0V/3.3V	Communication signal
	41	E2C_EUSS_VIDEO_SDO	O	0V/3.3V	Communication signal
	42	C2E_EUSS_VIDEO_SDI	I	0V/3.3V	Communication signal
	43	GND	-	-	GND
	44	E2C_EUSS_VIDEO_CLK	O	0V/3.3V	Communication signal
	45	GND	-	-	GND
	46	NC	-	-	NC
	47	LSU_TH	I	Analog	Detection signal
	48	NC	-	-	NC
	49	NC	-	-	NC
	50	+5V4_IL_F1	O	5V	Power supply
YC4	1	+5V4_IL_F1	O	5V	Power supply
	2	+5V4_IL_F1	O	5V	Power supply
	3	GND	-	-	GND
	4	GND	-	-	GND
	5	LSU_CLN_MOT_A	O	0V/24V	Motor output
	6	LSU_CLN_MOT_B	O	0V/24V	Motor output
	7	+24V4	O	24V	Power supply
	8	GND	-	-	GND
	9	WTNR_MOT_A	O	0V/24V	Motor output
	10	WTNR_MOT_B	O	0V/24V	Motor output
	11	WTNR_WEIGHT	I	Analog	Detection signal
	12	GND	-	-	GND
	13	+5V2_F1	O	5V	Power supply
	14	GND	-	-	GND
	15	CAS_HEATER	O	0V/3.3V	Control signal
	16	POWER_OFF	O	0V/3.3V	Control signal
YC6	1	+24V3_IL1_F1_F1	O	24V	Power supply
	2	CL_CNT	O	0V/5V	Drive signal
	3	T1_CNT_Y	O	0V/5V	Drive signal
	4	T1_CNT_C	O	0V/5V	Drive signal

Connector	Pin	Signal	I/O	Voltage	Description
YC6	5	T1_CNT_M	O	0V/5V	Drive signal
	6	GND	-	-	GND
	7	T2_OFF_REM	O	0V/20V	Drive signal
	8	T1_CNT_K	O	0V/5V	Drive signal
	9	SP_CNT	O	0V/20V	Drive signal
	10	T2_CNT	O	0V/5V	Drive signal
	11	T_REM	O	0V/18V	Drive signal
YC7	A1	+3.3V2_F1	O	3.3V	Power supply
	A2	+3.3V2_F1	O	3.3V	Power supply
	A3	+3.3V2_F1	O	3.3V	Power supply
	A4	GND	-	-	GND
	A5	GND	-	-	GND
	A6	GND	-	-	GND
	A7	GND	-	-	GND
	A8	FEED_EUSS_CLK	O	0V/3.3V	Communication signal
	A9	FEED_EUSS_SDO	O	0V/3.3V	Communication signal
	A10	FEED_EUSS_CS	O	0V/3.3V	Communication signal
	A11	FEED_EUSS_EN	O	0V/3.3V	Communication signal
	A12	FEED_EUSS_SDI	I	0V/3.3V	Communication signal
	A13	FEED_EUSS_INT	I	0V/3.3V	Communication signal
	B1	+3.3V3_F1	O	3.3V	Power supply
	B2	+5V2_F1	O	5V	Power supply
	B3	CAS2_OPEN	I	0V/3.3V	Detection signal
	B4	CAS1_OPEN	I	0V/3.3V	Detection signal
	B5	MPF_PAPER_SET	I	0V/3.3V	Detection signal
	B6	REGIST_SENS	I	0V/3.3V	Detection signal
	B7	REGIST_CL	O	0V/3.3V	Drive signal
	B8	IDSENS_LED_R	O	Analog	Drive signal
	B9	IDSENS_1_R	I	Analog	Detection signal
	B10	IDSENS_2_R	I	Analog	Detection signal
	B11	IDSENS_LED_F	O	Analog	Drive signal
	B12	IDSENS_1_F	I	Analog	Detection signal
	B13	IDSENS_2_F	I	Analog	Detection signal
YC8	A1	HVU_SYNC_CLK	O	0V/3.3V	Control signal
	A2	+3.3V2_F1	O	3.3V	Power supply
	A3	+3.3V2_F1	O	3.3V	Power supply
	A4	+3.3V2_F1	O	3.3V	Power supply
	A5	GND	-	-	GND
	A6	GND	-	-	GND
	A7	GND	-	-	GND
	A8	IMAGE_I2C_SDA	I/O	0V/3.3V	Communication signal
	A9	IMAGE_I2C_SCL	O	0V/3.3V	Communication signal
	A10	BRG_JOBSEPA	I	0V/3.3V	Detection signal
	A11	JOBSEPA	I	0V/3.3V	Detection signal
	A12	+3.3V3_F1	O	3.3V	Power supply
	B1	DF_RDY	I	0V/3.3V	Communication signal
	B2	DF_SEL	O	0V/3.3V	Communication signal

Connector	Pin	Signal	I/O	Voltage	Description
YC8	B3	DF_SDO	O	0V/3.3V	Communication signal
	B4	DF_SDI	I	0V/3.3V	Communication signal
	B5	DF_DET	I	0V/3.3V	Communication signal
	B6	DF_CLK	O	0V/3.3V	Communication signal
	B7	FSR_ALARM	I	0V/3.3V	Control signal
	B8	FSR_TH_MID	I	Analog	Detection signal
	B9	FSR_TH_PRESS	I	Analog	Detection signal
	B10	FSR_TH_CENT	I	Analog	Detection signal
	B11	FSR_TH_EDGE	I	Analog	Detection signal
	B12	FSR_3.3V2_THCUT	I	3.3V	Power supply
YC9	1	+5V2_F1	O	5V	Power supply
	2	+5V0_F2	O	5V	Power supply
	3	DRUM_HEATER	O	0V/3.3V	Drive signal
	4	FCOVER_OPEN	I	0V/3.3V	Detection signal
	5	+24V3_IL1_F1_F1	I	24V	Power supply
	6	GND	-	-	GND
	7	GND	-	-	GND
	8	MOT_ON	O	0V/3.3V	Communication signal
	9	MOTOR_CPU_RDY	I	0V/3.3V	Communication signal
	10	MOTOR_CPU_SDI	I	0V/3.3V	Communication signal
	11	MOTOR_CPU_CS	O	0V/3.3V	Communication signal
	12	MOTOR_CPU_SDO	O	0V/3.3V	Communication signal
	13	MOTOR_CPU_CLK	O	0V/3.3V	Communication signal
	14	IM_FR_EUSS_INT	I	0V/3.3V	Communication signal
	15	IM_FR_EUSS_SDI	I	0V/3.3V	Communication signal
	16	IM_FR_EUSS_EN	O	0V/3.3V	Communication signal
	17	FRONT_EUSS_CS	O	0V/3.3V	Communication signal
	18	IMAGE_EUSS_CS	O	0V/3.3V	Communication signal
	19	IM_FR_EUSS_SDO	O	0V/3.3V	Communication signal
	20	IM_FR_EUSS_CLK	O	0V/3.3V	Communication signal
YC10	A1	GND	-	-	GND
	A2	SCAN_MOT_A_N	O	0V/24V	Motor output
	A3	:SCAN_MOT_A_P	O	0V/24V	Motor output
	A4	SCAN_MOT_B_P	O	0V/24V	Motor output
	A5	SCAN_MOT_B_N	O	0V/24V	Motor output
	A6	PLT_OPEN	I	0V/3.3V	Detection signal
	A7	GND	-	-	GND
	A8	+3.3V3Pull-Up	O	3.3V	Power supply
	A9	+5V2_F1	O	5V	Power supply
	A10	ORG_SENS	I	0V/3.3V	Detection signal
	A11	GND	-	-	GND
	A12	HP_SENS	I	0V/3.3V	Detection signal
	A13	GND	-	-	GND
	A14	+3.3V2Pull-Up	O	3.3V	Power supply
	A15	GND	-	-	GND
	A16	GND	-	-	GND
	B1	DP_CLK	O	0V/3.3V	Communication signal

Connector	Pin	Signal	I/O	Voltage	Description
YC10	B2	DP_SDO	O	0V/3.3V	Communication signal
	B3	E2C_SCAN_DP_PAGEST	I	0V/3.3V	Control signal
	B4	DP_CO	I	0V/3.3V	Detection signal
	B5	DP_RDY	I	0V/3.3V	Communication signal
	B6	NC	-	-	NC
	B7	DP_ORG_SET	I	0V/3.3V	Detection signal
	B8	+3.3V3_F1	O	3.3V	Power supply
	B9	GND	-	-	GND
	B10	GND	-	-	GND
	B11	GND	-	-	GND
	B12	+24V4	O	24V	Power supply
	B13	+24V4	O	24V	Power supply
	B14	+24V4	O	24V	Power supply
	B15	DP_SEL	O	0V/3.3V	Communication signal
	B16	DP_SDI	I	0V/3.3V	Communication signal
YC11	1	GND	-	-	GND
	2	+3.3V2_F1	O	3.3V	Power supply
	3	IH_IGBT_CLK_HI	O	0V/3.3V	Drive signal
	4	IH_IGBT_CLK_LOW	O	0V/3.3V	Drive signal
	5	IH_ERROR	I	0V/3.3V	Control signal
	6	IH_TXD	O	0V/3.3V	Communication signal
	7	IH_RXD	I	0V/3.3V	Communication signal
	8	GND	-	-	GND
	9	IH_RELAY	O	0V/3.3V	Drive signal
	10	+24V4	O	24V	Power supply
YC12	A1	PF_CAS_OPEN	I	0V/3.3V	Detection signal
	A2	PF_PAUSE	O	0V/3.3V	Control signal
	A3	PF_SDO	O	0V/3.3V	Communication signal
	A4	PF_SDI	I	0V/3.3V	Communication signal
	A5	PF_RDY	I	0V/3.3V	Communication signal
	A6	PF_CLK	O	0V/3.3V	Communication signal
	A7	PF_SEL2	O	0V/3.3V	Communication signal
	A8	PF_SEL1	O	0V/3.3V	Communication signal
	A9	GND	-	-	GND
	A10	+3.3V3_F1	O	3.3V	Power supply
	A11	PF_VER_SENS_1	I	0V/3.3V	Detection signal
	A12	PF_VER_SENS_2	I	0V/3.3V	Detection signal
	B1	+3.3V2_F1	O	3.3V	Power supply
	B2	GND	-	-	GND
	B3	SUB_SDA	I/O	0V/3.3V	Communication signal
	B4	SUB_SCL	O	0V/3.3V	Communication signal
	B5	LVU_PWB_FAN_ALM	I	0V/3.3V	Detection signal
	B6	GND	-	-	GND
	B7	LVU_PWB_FAN_REM	O	0V/24V	FAN output
	B8	HUMTEMP_CLK	O	0V/3.3V	Drive signal
	B9	HUM	I	Analog	Detection signal
	B10	GND	-	-	GND

Connector	Pin	Signal	I/O	Voltage	Description
YC12	B11	TEMP	I	Analog	Detection signal
	B12	NC	-	-	NC
YC13	1	+24V4	O	24V	Power supply
	2	GND	-	-	GND
	3	GND	-	-	GND
	4	MCV_ENBL	I	0V/3.3V	Detection signal
	5	FGND(NC)	-	-	NC
	6	MCV_FED_COUNT	O	0V/5V	Control signal
	7	MCV_EJ_COUNT	O	0V/5V	Control signal
	8	MCV_COPY_SIG	O	0V/5V	Control signal
	9	MCV_UART_TXD	O	0V/3.3V	Communication signal
	10	GND	-	-	GND
	11	MCV_UART_RXD	I	0V/5V	Communication signal
	12	GND	-	-	GND
YC14	1	GND	-	-	GND
	2	DC1_SET	I	0V/3.3V	Control signal
	3	DC1_COUNT	O	0V/24V	Control signal
	4	+24V4	O	24V	Power supply
YC15	1	+5V2_F1	O	5V	Power supply
	2	+5V2_F1	O	5V	Power supply
	3	+5V2_F1	O	5V	Power supply
	4	+5V2_F1	O	5V	Power supply
	5	+5V2_F1	O	5V	Power supply
	6	+5V2_F1	O	5V	Power supply
	7	+5V2_F1	O	5V	Power supply
	8	+5V2_F1	O	5V	Power supply
	9	MK2_ENBL	I	0V/3.3V	Control signal
	10	+24V4	O	24V	Power supply
	11	MK2_RKEY7	O	0V/24V	Control signal
	12	MK2_RKEY6	O	0V/24V	Control signal
	13	MK2_RKEY5	O	0V/24V	Control signal
	14	MK2_RKEY4	O	0V/24V	Control signal
	15	MK2_RKEY3	O	0V/24V	Control signal
	16	MK2_RKEY2	O	0V/24V	Control signal
	17	MK2_RKEY1	O	0V/24V	Control signal
	18	MK2_RKEY0	O	0V/24V	Control signal
	19	GND	-	-	GND
	20	MK2_COUNT	O	0V/24V	Control signal
YC16	1	+5V0	I	5V	Power supply
	2	GND	-	-	GND
	3	GND	-	-	GND
	4	GND	-	-	GND
	5	+24V4	I	24V	Power supply
	6	+24V4	I	24V	Power supply
YC17	1	+5V2_F1	O	5V	Power supply
	2	INSERTER_DET	I	0V/3.3V	Detection signal

(3)Image drive PWB

(3-1)PWB photograph

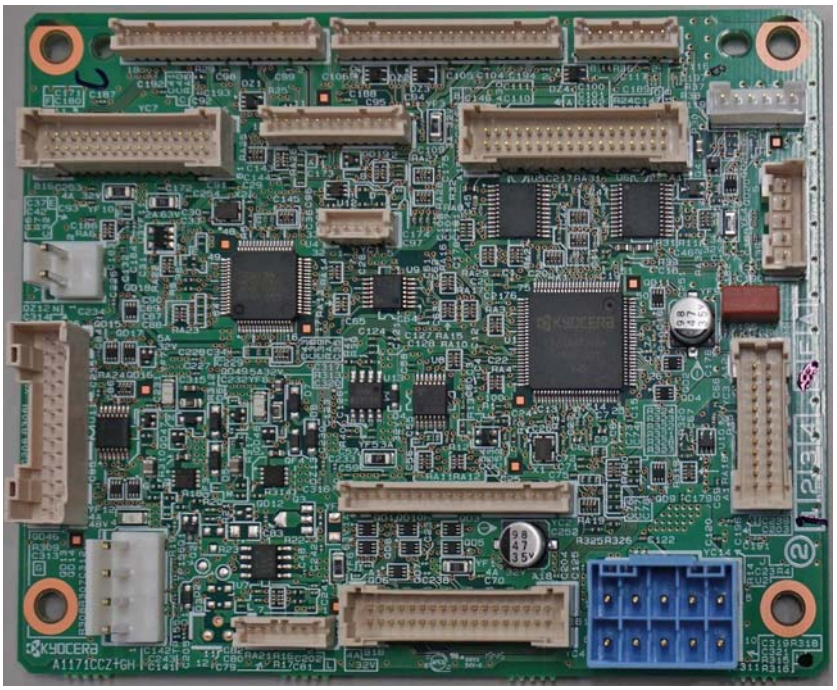

(3-2)Connector position

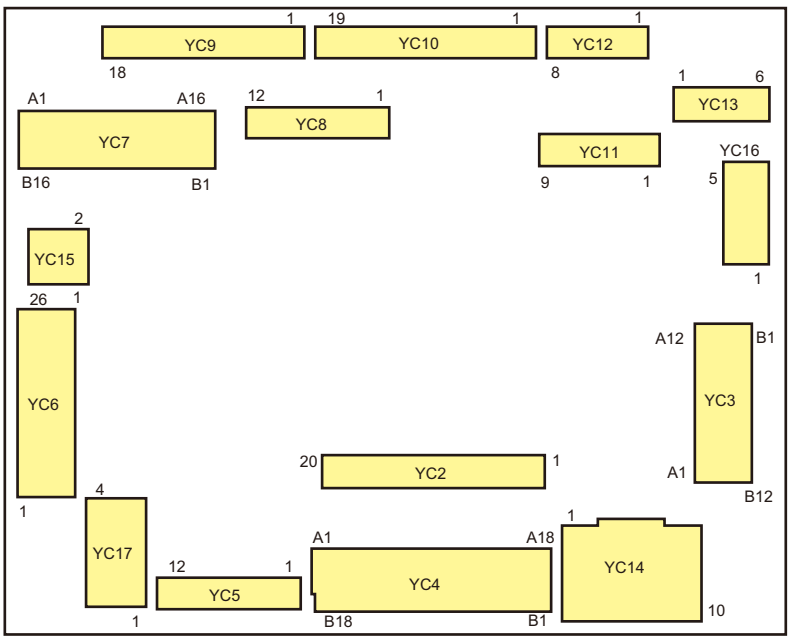

(3-3)Connector lists

Destination

- YC2: Engine PWB
- YC3: Engine PWB
- YC5: Belt release motor, Developer clutch, Belt release sensor
- YC6: Drum motor K, Developer K/Transfer belt motor
- YC7: Front drive PWB
- YC8: Transfer connect PWB, JS sensor
- YC9: Fuser PWB
- YC10: DF、AK
- YC11: Toner motor K, Toner motor sensor K, Toner level sensor K,
- YC12: RFID PWB
- YC13: Container motor
- YC14: Power supply PWB
- YC15: Right cover SW
- YC16: DF、AK
- YC17: Feed drive PWB

Connector	Pin	Signal	I/O	Voltage	Description
YC2	1	IM_FR_EUSS_CLK	I	0V/3.3V	Engine CPU ⇔ Hercules communication
	2	IM_FR_EUSS_SDO	I	0V/3.3V	Engine CPU ⇔ Hercules communication
	3	IMAGE_EUSS_CS	I	0V/3.3V	Engine CPU ⇔ Hercules communication
	4	FRONT_EUSS_CS	I	0V/3.3V	Engine CPU ⇔ Hercules communication
	5	IM_FR_EUSS_EN	I	0V/3.3V	Engine CPU ⇔ Hercules communication
	6	IM_FR_EUSS_SDI	O	0V/3.3V	Engine CPU ⇔ Hercules communication
	7	IM_FR_EUSS_INT	O	0V/3.3V	Engine CPU ⇔ Hercules communication
	8	MOTOR_CPU_CLK	I	0V/3.3V	Engine CPU ⇔ Motor CPUcommunication
	9	MOTOR_CPU_SDO	I	0V/3.3V	Engine CPU ⇔ Motor CPUcommunication
	10	MOTOR_CPU_CS	I	0V/3.3V	Engine CPU ⇔ Motor CPUcommunication
	11	MOTOR_CPU_SDI	O	0V/3.3V	Engine CPU ⇔ Motor CPUcommunication
	12	MOTOR_CPU_RDY	O	0V/3.3V	Engine CPU ⇔ Motor CPUcommunication
	13	MOT_ON	I	0V/3.3V	Engine CPU ⇔ Motor CPUcommunication
	14	GND	-	-	Ground
	15	GND	-	-	Ground
	16	+24V3_IL1_F1_F1	O	24V	Power supply
	17	FCOVER_OPEN	O	0V/3.3V	Sensor signal
	18	DRUM HEATER	I	0V/3.3V	Control signal
	19	+5V0_F2	I	5V	Power supply
	20	+5V2_F1	I	5V	Power supply
YC3	1	+3.3V3_F1	I	3.3V	Power supply

Connector	Pin	Signal	I/O	Voltage	Description
YC3	2	JOBSEPA	O	0V/3.3V	Sensor signal
	3	BRG_JOBSEPA	O	0V/3.3V	Sensor signal
	4	IMAGE_I2C_SCL	I	0V/3.3V	I2C communication
	5	MAGE_I2C_SDA	O	0V/3.3V	I2C communication
	6	GND	-	-	Ground
	7	GND	-	-	Ground
	8	GND	-	-	Ground
	9	+3.3V2_F1	I	3.3V	Power supply
	10	+3.3V2_F1	I	3.3V	Power supply
	11	+3.3V2_F1	I	3.3V	Power supply
	12	HVU_SYNC_CLK	I	0V/3.3V	Control signal
	13	FSR_3.3V2_THCUT	O	3.3V	Power supply
	14	FSR_TH_EDGE	O	Analog	Sensor signal
	15	FSR_TH_CENTRAL	O	Analog	Sensor signal
	16	RSR_TH_PRESS	O	Analog	Sensor signal
	17	FSR_TH_MIDDLE	O	Analog	Sensor signal
	18	FSR_ALARM	O	0V/3.3V	Control signal
	19	DF_CLK	I	0V/3.3V	Engine CPU <-> DF CPU communication
	20	DF_DET	O	0V/3.3V	Engine CPU <-> DF CPU communication
	21	DF_SDI	O	0V/3.3V	Engine CPU <-> DF CPU communication
	22	DF_SDO	I	0V/3.3V	Engine CPU <-> DF CPU communication
	23	DF_SEL	I	0V/3.3V	Engine CPU <-> DF CPU communication
	24	DF_RDY	O	0V/3.3V	Engine CPU <-> DF CPU communication
YC4	1	MAG_DC_CNT_M	O	0V/14V	Control signal
	2	MAG_AC_CNT_M	O	0V/14V	Control signal
	3	MAG_ISENS_SHIFT2	O	0V/14V	Control signal
	4	MAG_ISENS_SHIFT1	O	0V/14V	Control signal
	5	SGND	-	-	Ground
	6	MAG_ISENS_K	I	Analog 0 to 3.3V	Current detect signal
	7	MAG_REVERSE_REM	O	0V/16V	Control signal
	8	MAG_DC_CNT_K	O	0V/14V	Control signal
	9	MAG_AC_CNT_K	O	0V/14V	Control signal
	10	MAG_AC_CLK_K	O	0V/14V	Control signal
	11	DRM_ISENS_K	I	Analog 0 to 3.3V	Current detect signal
	12	DRM_DC_CNT_K	O	0V/14V	Control signal
	13	DRM_AC_CNT_K	O	0V/9V	Control signal
	14	DRM_AC_CLK	O	0V/12V	Control signal
	15	+24V3_IL2_F1_F1	O	24V	Power supply
	16	+24V3_IL2_F1_F1	O	24V	Power supply
	17	GND	-	-	Ground
	18	GND	-	-	Ground
	19	SGND	-	-	Ground
	20	DRM_ISENS_Y	I	Analog 0 to 3.3V	Current detect signal

Connector	Pin	Signal	I/O	Voltage	Description
YC4	21	DRM_ISENS_C	I	Analog 0 to 3.3V	Current detect signal
	22	DRM_ISENS_M	I	Analog 0 to 3.3V	Current detect signal
	23	DRM_DC_CNT_Y	O	0V/14V	Control signal
	24	DRM_DC_CNT_C	O	0V/14V	Control signal
	25	DRM_DC_CNT_M	O	0V/14V	Control signal
	26	DRM_AC_CNT_Y	O	0V/9V	Control signal
	27	DRM_AC_CNT_C	O	0V/9V	Control signal
	28	DRM_AC_CNT_M	O	0V/9V	Control signal
	29	MAG_ISENS_Y	I	Analog 0 to 3.3V	Current detect signal
	30	MAG_ISENS_C	I	Analog 0 to 3.3V	Current detect signal
	31	MAG_ISENS_M	I	Analog 0 to 3.3V	Current detect signal
	32	MAG_DC_CNT_Y	O	0V/14V	Control signal
	33	MAG_DC_CNT_C	O	0V/14V	Control signal
	34	MAG_AC_CNT_Y	O	0V/14V	Control signal
	35	MAG_AC_CNT_C	O	0V/14V	Control signal
	36	MAG_AC_CLK_COL	O	0V/14V	Control signal
YC5	1	TBLT_RLSMOT_OUT1	O	0V/24V	Motor output
	2	TBLT_RLSMOT_OUT2	O	0V/24V	Motor output
	3	+24V4_F1	O	24V	Power supply
	4	DLP_K_CL	O	0V/24V	Clutch output
	5	+3.3V2_LED	O	Analog	Control signal
	6	GND	-	-	Ground
	7	TBLT_PLS_SENS	I	0V/3.3V	Sensor signal
YC6	1	DRM_BKMOT_DIR	O	0V/5V	Control signal
	2	DRM_BKMOT_LD	I	0V/3.3V	Control signal
	3	DRM_BKMOT_CLK	O	0V/5V	Control signal
	4	DRM_BKMOT_REM	O	0V/5V	Control signal
	5	GND	-	-	Ground
	6	+24V4_F2	O	24V	Power supply
	7	DRM_COLMOT_DIR	-	-	Not used
	8	DRM_COLMOT_LD	-	-	Not used
	9	DRM_COLMOT_CLK	-	-	Not used
	10	DRM_COLMOT_REM	-	-	Not used
	11	GND	-	-	Not used
	12	+24V4_F2	-	-	Not used
	13	TBLT_DLPKMOT_BRK	O	0V/4.2V	Control signal
	14	TBLT_DLPKMOT_DIR	O	0V/5V	Control signal
	15	TBLT_DLPKMOT_FG	I	0V/3.3V	Control signal
	16	TBLT_DLPKMOT_CLK	O	0V/3.3V	Control signal
	17	TBLT_DLPKMOT_REM	O	0V/1.2V	Control signal
	18	GND	-	-	Ground
	19	+24V3_IL1_F1	O	24V	Power supply
	20	DLP_COLMOT_DIR	-	-	Not used
	21	DLP_COLMOT_LD	-	-	Not used
	22	DLP_COLMOT_CLK	-	-	Not used
	23	DLP_COLMOT_REM	-	-	Not used
	24	GND	-	-	Not used

Connector	Pin	Signal	I/O	Voltage	Description
YC6	25	+24V3_IL1_F1	-	-	Not used
	26	N.C.	-	-	Not used
YC7	1	BELT_TH	O	Analog	Sensor signal
	2	BRG_SORTER_SET	O	Analog	Sensor signal
	3	CONT_RECOG	O	Analog	Sensor signal
	4	HOP_FULL_K	O	Analog	Sensor signal
	5	HOP_FULL_M	O	Analog	Sensor signal
	6	HOP_FULL_C	O	Analog	Sensor signal
	7	HOP_FULL_Y	O	Analog	Sensor signal
	8	FRONT_EUSS_INT	I	0V/3.3V	Engine CPU <-> Hercules communication
	9	FRONT_EUSS_SDI	I	0V/3.3V	Engine CPU <-> Hercules communication
	10	FRONT_EUSS_EN	O	0V/3.3V	Engine CPU <-> Hercules communication
	11	FRONT_EUSS_CS	O	0V/3.3V	Engine CPU <-> Hercules communication
	12	FRONT_EUSS_SDO	O	0V/3.3V	Engine CPU <-> Hercules communication
	13	FRONT_EUSS_CLK	O	0V/3.3V	Engine CPU <-> Hercules communication
	14	+3.3V2_F1	O	3.3V	Power supply
	15	+3.3V2_F1	O	3.3V	Power supply
	16	+3.3V2_F1	O	3.3V	Power supply
	17	+24V2_F4	O	24V	Power supply
	18	+5V0_F2	O	5V	Power supply
	19	FCOVER_OPEN	I	0V/3.3V	Sensor signal
	20	DRUM_HEATER	O	0V/3.3V	Control signal
	21	MDRIVE_VIBMOT	I	0V/3.3V	Control signal
	22	GND	-	-	Ground
	23	GND	-	-	Ground
	24	GND	-	-	Ground
	25	GND	-	-	Ground
	26	GND	-	-	Ground
	27	GND	-	-	Ground
	28	+24V2_F5	O	24V	Power supply
	29	+24V2_F5	O	24V	Power supply
	30	GND	-	-	Ground
	31	GND	-	-	Ground
	32	+24V3_IL1_F1_F1	O	24V	Power supply
YC8	1	+24V2_F1	O	24V	Power supply
	2	TBLT_CLMOT_PWM	O	0V/3.3V	Control signal
	3	+3.3V2_F1	O	3.3V	Power supply
	4	TBLT_CLMOT_FG	I	0V/3.3V	Control signal
	5	TBELT_TH	I	Analog	Sensor signal
	6	IMAGE_I2C_SCL	O	0V/3.3V	I2C communication
	7	GND	-	-	Ground
	8	GND	-	-	Ground
	9	IMAGE_I2C_SDA	I/O	0V/3.3V	I2C communication

Connector	Pin	Signal	I/O	Voltage	Description
YC8	10	+3.3V3_LED	O	Analog	Control signal
	11	GND	-	-	Ground
	12	JOBSEPA	I	0V/3.3V	Sensor signal
YC9	1	GND	-	-	Ground
	2	IMAGE_I2C_SDA	I/O	0V/3.3V	I2C communication
	3	IMAGE_I2C_SCL	O	0V/3.3V	I2C communication
	4	+3.3V2_F1	O	3.3V	Power supply
	5	FSR_TH_PRESS	I	Analog	Sensor signal
	6	FSR_PRESS_SENS	I	0V/3.3V	Sensor signal
	7	FSR_TH_EDGE	I	Analog	Sensor signal
	8	FSR_JAM_SENS	I	0V/3.3V	Sensor signal
	9	FSR_ROT_PLS_F	I	0V/3.3V	Sensor signal
	10	FSR_3.3V2_THCUT	I	3.3V	Power supply
	11	+3.3V2_F1	O	3.3V	Power supply
	12	GND	-	-	Ground
	13	FSR_TH_MIDDLE	I	Analog	Sensor signal
	14	+3.3V2_LED	O	Analog	Control signal
	15	GND	-	-	Ground
	16	FSR_ROT_PLS_R	I	0V/3.3V	Sensor signal
	17	GND	-	-	Ground
	18	FSR_TH_CENTRAL	I	Analog	Sensor signal
YC10	1	DF_RDY	I	0V/3.3V	Engine CPU <-> DF CPU communication
	2	DF_SEL	O	0V/3.3V	Engine CPU <-> DF CPU communication
	3	DF_SDO	O	0V/3.3V	Engine CPU <-> DF CPU communication
	4	DF_SDI	I	0V/3.3V	Engine CPU <-> DF CPU communication
	5	BRG_MOT_DIR	O	0V/3.3V	Control signal
	6	DF_DET	I	0V/3.3V	Engine CPU <-> DF CPU communication
	7	DF_CLK	O	0V/3.3V	Engine CPU <-> DF CPU communication
	8	+24V2_F2	O	24V	Power supply
	9	+3.3V2_F1	O	3.3V	Power supply
	10	BRG_MOT2_CLK	O	0V/3.3V	Control signal
	11	BRG_MOT2_PD	O	0V/3.3V	Control signal
	12	BRG_OPEN	I	0V/3.3V	Sensor signal
	13	BRG_FEED_SENS2	I	0V/3.3V	Sensor signal
	14	BRG_FEED_SENS1	I	0V/3.3V	Sensor signal
	15	BRG_SORTER_SET	I	Analog	Control signal
	16	BRG_MOT1_CLK	O	0V/3.3V	Control signal
	17	BRG_MOT_REM	O	0V/3.3V	Control signal
	18	BRG_MOT1_PD	O	0V/3.3V	Control signal
	19	BRG_JOBSEPA	I	0V/3.3V	Sensor signal
	20	+3.3V3_F1	O	3.3V	Power supply
YC11	1	HOP_MOT_K_OUT1	O	0V/24V	Motor output
	2	HOP_MOT_K_OUT2	O	0V/24V	Motor output

Connector	Pin	Signal	I/O	Voltage	Description
YC11	3	+3.3V2_LED	O	Analog	Control signal
	4	GND	-	-	Ground
	5	HOP_PLS_BK	I	0V/3.3V	Sensor signal
	6	+3.3V2_F1	O	3.3V	Power supply
	7	HOP_FULL_BK	I	Analog	Sensor signal
	8	HOP_FULL_LED_BK	O	0V/3.3V	Control signal
	9	+3.3V2_LED	O	Analog	Control signal
YC12	1	+5V2_F1	O	5V	Power supply
	2	+3.3V2_F1	O	3.3V	Power supply
	3	IMAGE_I2C_SCL	O	0V/3.3V	I2C communication
	4	GND	-	-	Ground
	5	IMAGE_I2C_SDA	I/O	0V/3.3V	I2C communication
	6	GND	-	-	Ground
	7	CONT_RETURN	O	Analog	Control signal
	8	CONT_RECOG	I	Analog	Control signal
YC13	1	CONT_MOT_DIR	O	0V/5V	Control signal
	2	CONT_MOT_LD	I	0V/3.3V	Control signal
	3	CONT_MOT_CLK	O	0V/5V	Control signal
	4	CONT_MOT_REM	O	0V/5V	Control signal
	5	GND	-	-	Ground
	6	+24V2_F1	O	24V	Power supply
YC14	1	+24V4	I	24V	Power supply
	2	+24V3	I	24V	Power supply
	3	+24V3	I	24V	Power supply
	4	+24V2	I	24V	Power supply
	5	+24V2	I	24V	Power supply
	6	GND	-	-	Ground
	7	GND	-	-	Ground
	8	GND	-	-	Ground
	9	GND	-	-	Ground
	10	GND	-	-	Ground
YC15	1	+24V3_IL	I	24V	Power supply
	2	+24V3	O	24V	Power supply
YC16	1	+24V2_F3(DF)	O	24V	Power supply
	2	+24V2_F3(DF)	O	24V	Power supply
	3	GND(DF)	-	-	Ground
	4	GND(AK)	-	-	Ground
	5	GND(DF)	-	-	Ground
YC17	1	+24V4_F1	O	24V	Power supply
	2	GND	-	-	Ground
	3	GND	-	-	Ground
	4	+24V3_IL2_F1	O	24V	Power supply

(4)Feed Drive PWB

(4-1)PWB photograph



(4-2)Connector position

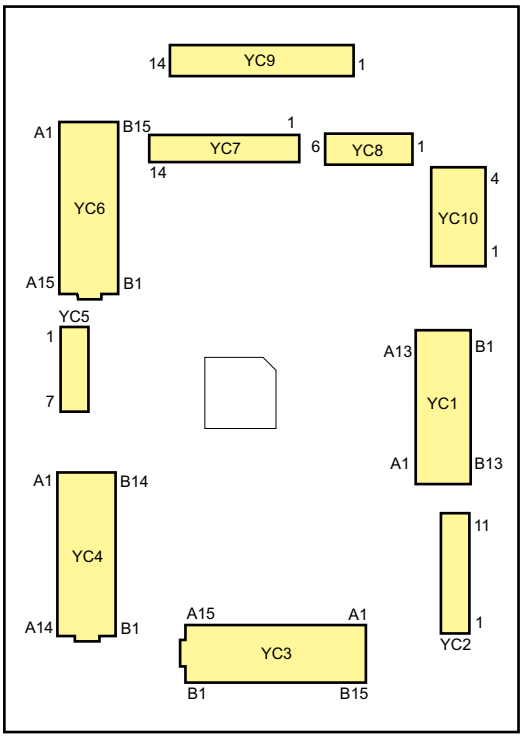

(4-3)Connector lists

Destination

- YC1: Engine PWB
- YC2: Paper feed clutch 1, Paper feed clutch 2, Vertical conveying clutch, Speed shift clutch, current PWB
- YC3: Cassette switch 1, Paper length switch 1, Paper width switch 1, Upper paper gauge sensor 1, Lower paper gauge sensor 1, Lift motor 1, Lift motor 2, Paper width switch 2, Upper paper gauge sensor 2, Lower paper gauge sensor 2, Cassette switch 2, Paper length switch 2
- YC4: Fuser edge fan motor, Belt roll-up sensor, Duplex sensor 1, Duplex sensor 2, Conveying open/close switch, Duplex clutch1, Duplex clutch 2, MP paper width sensor, MP tray sensor, MP paper length sensor
- YC5: MP lift motor, Home position switch, MP paper sensor
- YC6: Registration sensor, Middle clutch, Conveying sensor, Lift upper limit sensor 1, Paper sensor 1, Lift upper limit sensor 2, Paper sensor 2, Feed sensor 1, Feed sensor 2
- YC7: Front ID sensor, Rear ID sensor, Cleaning solenoid, Registration clutch
- YC8: Feed motor
- YC9: Fuser motor, Fuser pressure release motor, Exit fan motor, Container/hopper fan motor
- YC10: Image drive PWB

Connector	Pin	Signal	I/O	Voltage	Description
YC1	1	FEED_EUSS_INT	O	0V/3.3V	Engine CPU <-> Hercules communication
	2	FEED_EUSS_SDI	O	0V/3.3V	Engine CPU <-> Hercules communication
	3	FEED_EUSS_EN	I	0V/3.3V	Engine CPU <-> Hercules communication
	4	FEED_EUSS_CS	I	0V/3.3V	Engine CPU <-> Hercules communication
	5	FEED_EUSS_SDO	I	0V/3.3V	Engine CPU <-> Hercules communication
	6	FEED_EUSS_CLK	I	0V/3.3V	Engine CPU <-> Hercules communication
	7	GND	-	-	Ground
	8	GND	-	-	Ground
	9	GND	-	-	Ground
	10	GND	-	-	Ground
	11	+3.3V2_F1	I	3.3V	Power supply
	12	+3.3V2_F1	I	3.3V	Power supply
	13	+3.3V2_F1	I	3.3V	Power supply
	14	IDSENS_2_F	O	Analog	Sensor signal
	15	IDSENS_1_F	O	Analog	Sensor signal
	16	IDSENS_LED_F	I	Analog	Control signal
	17	IDSENS_2_R	O	Analog	Sensor signal
	18	IDSENS_1_R	O	Analog	Sensor signal
	19	IDSENS_LED_R	I	Analog	Control signal
	20	REGIST_CL	I	Analog	Control signal
	21	REGIST_SENS	O	0V/3.3V	Sensor signal
	22	MPF_PAPER_SET	O	0V/3.3V	Sensor signal
	23	CAS1_OPEN	O	0V/3.3V	Sensor signal
	24	CAS2_OPEN	O	0V/3.3V	Sensor signal

Connector	Pin	Signal	I/O	Voltage	Description
YC1	25	+5V2_F1	I	5V	Power supply
	26	+3.3V3_F1	I	3.3V	Power supply
YC2	1	CAS1_FEED_CL	O	0V/24V	Clutch output
	2	+24V4_F1	O	24V	Power supply
	3	VFEED_CL	O	0V/24V	Clutch output
	4	+24V4_F1	O	24V	Power supply
	5	CAS2_FEED_CL	O	0V/24V	Clutch output
	6	+24V4_F1	O	24V	Power supply
	7	2WAY_CL	O	0V/24V	Clutch output
	8	+24V4_F1	O	24V	Power supply
	9	CURRENT_MON	I	Analog	Sensor signal
	10	GND	-	-	Ground
	11	+5V2_F1	O	5V	Power supply
YC3	A1	CAS1_OPEN	I	0V/3.3V	Sensor signal
	A2	GND	-	-	Ground
	A3	CAS1_LSIZE3	I	0V/3.3V	Sensor signal
	A4	GND	-	-	Ground
	A5	CAS1_LSIZE2	I	0V/3.3V	Sensor signal
	A6	CAS1_LSIZE1	I	0V/3.3V	Sensor signal
	A7	CAS1_WSIZE	I	0V/3.3V	Sensor signal
	A8	GND	-	-	Ground
	A9	+3.3V2_LED	O	Analog	Control signal
	A10	GND	-	-	Ground
	A11	CAS1_QUANT1	I	0V/3.3V	Sensor signal
	A12	+3.3V2_LED	O	Analog	Control signal
	A13	GND	-	-	Ground
	A14	CAS1_QUANT2	I	0V/3.3V	Sensor signal
	A15	LIFT_MOT1_OUT1	O	0V/24V	Motor output
	A16	LIFT_MOT1_OUT2	O	0V/24V	Motor output
	B1	LIFT_MOT2_OUT1	O	0V/24V	Motor output
	B2	LIFT_MOT2_OUT2	O	0V/24V	Motor output
	B3	CAS2_WSIZE	I	0V/3.3V	Sensor signal
	B4	GND	-	-	Ground
	B5	+3.3V2_LED	O	Analog	Control signal
	B6	GND	-	-	Ground
	B7	CAS2_QUANT1	I	0V/3.3V	Sensor signal
	B8	+3.3V2_LED	O	Analog	Control signal
	B9	GND	-	-	Ground
	B10	CAS2_QUANT2	I	0V/3.3V	Sensor signal
	B11	CAS2_OPEN	I	0V/3.3V	Sensor signal
	B12	GND	-	-	Ground
	B13	CAS2_LSIZE3	I	0V/3.3V	Sensor signal
	B14	GND	-	-	Ground
	B15	CAS2_LSIZE2	I	0V/3.3V	Sensor signal
	B16	CAS2_LSIZE1	I	0V/3.3V	Sensor signal
YC4	A1	DU_CL1	O	0V/24V	Control signal
	A2	+24V4_F1	O	24V	Power supply

Connector	Pin	Signal	I/O	Voltage	Description
YC4	A3	DU_CL2	O	0V/24V	Control signal
	A4	+24V4_F1	O	24V	Power supply
	A5	MPFCL_REM	O	0V/24V	Control signal
	A6	+24V4_F1	O	24V	Power supply
	A7	+3.3V2_LED	O	Analog	Control signal
	A8	MPF_WSIZE	I	Analog	Sensor signal
	A9	GND	-	-	Ground
	A10	MPF_TRAY	I	0V/3.3V	Sensor signal
	A11	GND	-	-	Ground
	A12	+3.3V2_LED	O	Analog	Control signal
	A13	GND	-	-	Ground
	A14	MPF_LSIZE	I	0V/3.3V	Sensor signal
	B1	EDGE_FAN_LOCK	I	0V/3.3V	Control signal
	B2	GND	-	-	Ground
	B3	EDGE_FAN	O	0V/24V	Control signal
	B4	GND	-	-	Ground
	B5	TBELT_FEED_SENS	I	0V/3.3V	Control signal
	B6	+3.3V2_F1	O	3.3V	Power supply
	B7	+3.3V2_LED	O	Analog	Control signal
	B8	GND	-	-	Ground
	B9	DU_SENS2	I	0V/3.3V	Sensor signal
	B10	+3.3V2_LED	O	Analog	Control signal
	B11	GND	-	-	Ground
	B12	DU_SENS1	I	0V/3.3V	Sensor signal
	B13	RCOVER_OPEN	I	0V/3.3V	Sensor signal
	B14	GND	-	-	Ground
YC5	1	MPF_LIFTMOT_OUT1	O	0V/24V	Motor output
	2	MPF_LIFTMOT_OUT2	O	0V/24V	Motor output
	3	MPFLIFT_HP	I	0V/3.3V	Sensor signal
	4	GND	-	-	Ground
	5	+3.3V3_LED	O	Analog	Control signal
	6	GND	-	-	Ground
	7	MPF_PAPER_SET	I	0V/3.3V	Sensor signal
YC6	A1	GND	-	-	Ground
	A2	REGIST_SENS	I	0V/3.3V	Sensor signal
	A3	+3.3V2_F1	O	3.3V	Power supply
	A4	MIDDLE_CL	O	0V/24V	Control signal
	A5	+24V4_F1	O	24V	Power supply
	A6	+3.3V2_F1	O	3.3V	Power supply
	A7	ZERO_SENS1	I	0V/3.3V	Sensor signal
	A8	GND	-	-	Ground
	A9	+3.3V2_F1	O	3.3V	Power supply
	A10	ZERO_SENS2	I	0V/3.3V	Sensor signal
	A11	GND	-	-	Ground
	A12	N.C.	-	-	-
	A13	N.C.	-	-	-
	A14	N.C.	-	-	-

Connector	Pin	Signal	I/O	Voltage	Description
YC6	A15	N.C.	-	-	-
	B1	+3.3V2_LED	O	Analog	Control signal
	B2	GND	-	-	Ground
	B3	FEED_SENS	I	0V/3.3V	Sensor signal
	B4	+3.3V2_LED	O	Analog	Control signal
	B5	GND	-	-	Ground
	B6	CAS1_LIFT_LIMIT	I	0V/3.3V	Sensor signal
	B7	+3.3V2_LED	O	Analog	Control signal
	B8	GND	-	-	Ground
	B9	CAS1_EMPTY	I	0V/3.3V	Sensor signal
	B10	+3.3V2_LED	O	Analog	Control signal
	B11	GND	-	-	Ground
	B12	CAS2_LIFT_LIMIT	I	0V/3.3V	Sensor signal
	B13	+3.3V2_LED	O	Analog	Control signal
	B14	GND	-	-	Ground
	B15	CAS2_EMPTY	I	0V/3.3V	Sensor signal
YC7	1	+3.3V2_F1	O	3.3V	Power supply
	2	IDSENS_LED_F	O	Analog	Control signal
	3	GND	-	-	Ground
	4	ID_SENS_1_F	I	Analog	Sensor signal
	5	ID_SENS_2_F	I	Analog	Sensor signal
	6	+3.3V2_F1	O	3.3V	Power supply
	7	IDSENS_LED_R	O	Analog	Control signal
	8	GND	-	-	Ground
	9	ID_SENS_1_R	I	Analog	Sensor signal
	10	ID_SENS_2_R	I	Analog	Sensor signal
	11	+24V4_F1	O	24V	Power supply
	12	IDSENS_CLSOL	O	0V/24V	Control signal
	13	REGIST_CL	O	0V/24V	Control signal
	14	+24V4_F1	O	24V	Power supply
YC8	1	FEED_MOT_DIR	O	0V/5V	Control signal
	2	FEED_MOT_LD	I	0V/3.3V	Control signal
	3	FEED_MOT_CLK	O	0V/5V	Control signal
	4	FEED_MOT_REM	O	0V/5V	Control signal
	5	GND	-	-	Ground
	6	+24V3_IL2_F1	O	24V	Power supply
YC9	1	FSRMOT_DIR	O	0V/5V	Control signal
	2	FSRMOT_LD	I	0V/3.3V	Control signal
	3	FSRMOT_CLK	O	0V/5V	Control signal
	4	FSRMOT_REM	O	0V/5V	Control signal
	5	GND	-	-	Ground
	6	+24V3_IL2_F1	O	24V	Power supply
	7	FSR_RLSMOT_OUT2	O	0V/24V	Motor output
	8	FSR_RLSMOT_OUT1	O	0V/24V	Motor output
	9	EXFAN_LOCK	I	0V/3.3V	Control signal
	10	GND	-	-	Ground
	11	EXFAN_REM	O	0V/24V	Control signal

Connector	Pin	Signal	I/O	Voltage	Description
YC9	12	CONT_HOP_FAN	O	0V/24V	Control signal
	13	GND	-	-	Ground
	14	CONT_HOP_FAN_LOCK	I	0V/3.3V	Control signal
YC10	1	+24V4_F1	O	24V	Power supply
	2	GND	-	-	Ground
	3	GND	-	-	Ground
	4	+24V3_IL2_F1	O	24V	Power supply

(5) Front drive PWB

(5-1)PWB photograph

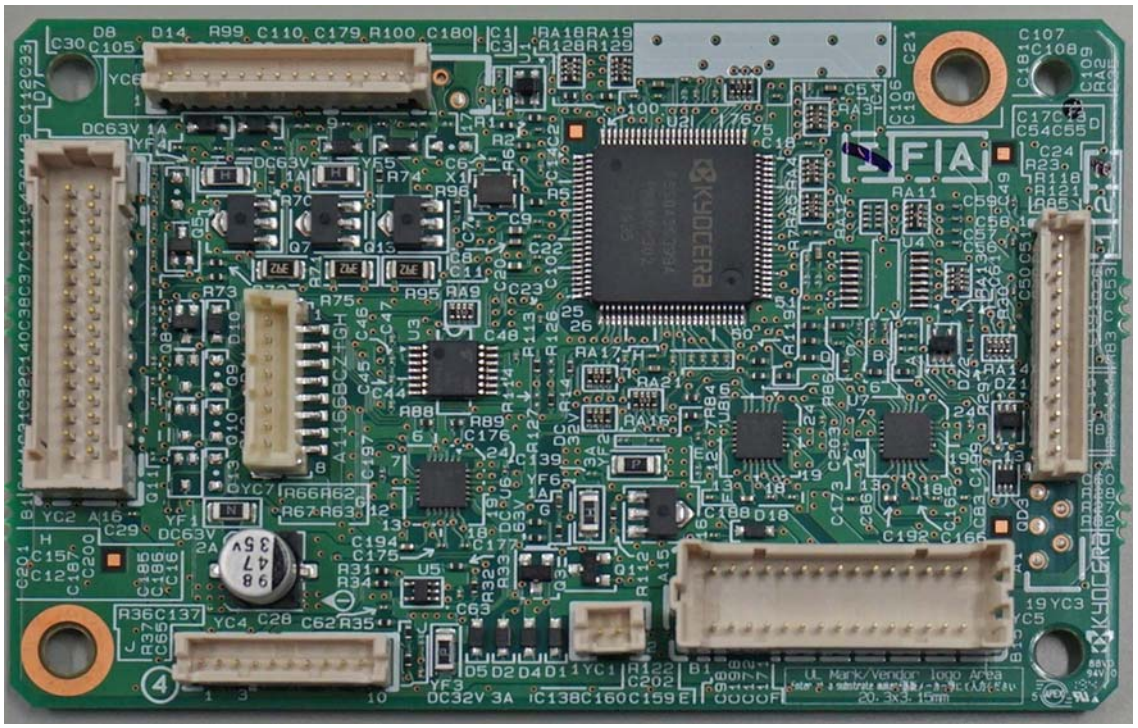

(5-2)Connector position

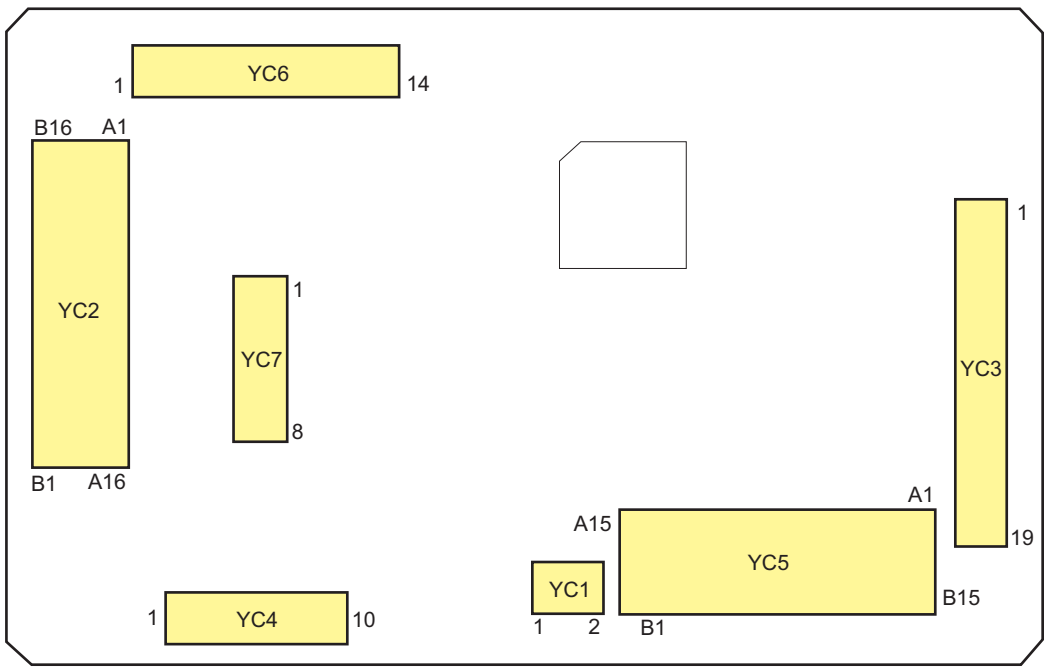

(5-3)Connector lists

Destination

YC1: Front cover switch

YC2: Image drive PWB

YC3: Drum/Developer connect PWB

YC4: Fuser high voltage PWB

YC5: Rear exit motor, Exit reversing motor, Lower exit full sensor, Upper exit full sensor, Lower exit solenoid, Upper exit solenoid, Exit reversing sensor

YC6: IH PWB fan motor, Front exit/IH fan motor, Middle exit/IH fan motor

YC7: Container solenoid K

Connector	Pin	Signal	I/O	Voltage	Description
YC1	1	GND	-	-	Ground
	2	FRONT_CO_OPEN	I	0V/3.3V	Sensor signal
YC2	1	+3.3V2_F1	I	3.3V	Power supply
	2	+3.3V2_F1	I	3.3V	Power supply
	3	+3.3V2_F1	I	3.3V	Power supply
	4	FRONT_EUSS_CLK	I	0V/3.3V	Engine CPU <-> Hercules communication
	5	FRONT_EUSS_SDO	I	0V/3.3V	Engine CPU <-> Hercules communication
	6	FRONT_EUSS_CS	I	0V/3.3V	Engine CPU <-> Hercules communication
	7	FRONT_EUSS_EN	I	0V/3.3V	Engine CPU <-> Hercules communication
	8	FRONT_EUSS_SDI	O	0V/3.3V	Engine CPU <-> Hercules communication
	9	FRONT_EUSS_INT	O	0V/3.3V	Engine CPU <-> Hercules communication
	10	HOP_FULL_Y	O	Analog	Sensor signal
	11	HOP_FULL_C	O	Analog	Sensor signal
	12	HOP_FULL_M	O	Analog	Sensor signal
	13	HOP_FULL_K	O	Analog	Sensor signal
	14	CONT_RECOG	I	Analog	Sensor signal
	15	BRG_SORTER_SET	I	Analog	Sensor signal
	16	BELT_TH	I	Analog	Sensor signal
	17	'+24V3_IL1_F1_F1	I	24V	Interlock Power supply
	18	GND	-	-	Ground
	19	GND	-	-	Ground
	20	+24V2_F5	I	24V	Power supply
	21	+24V2_F5	I	24V	Power supply
	22	GND	-	-	Ground
	23	GND	-	-	Ground
	24	GND	-	-	Ground
	25	GND	-	-	Ground
	26	GND	-	-	Ground
	27	GND	-	-	Ground

Connector	Pin	Signal	I/O	Voltage	Description
YC2	28	MDRIVE_VIBMOT	O	0V/3.3V	Sensor signal
	29	DRUM_HEATER	I	0V/3.3V	Control signal
	30	FCOVER_OPEN	O	0V/3.3V	Control signal
	31	'+5V0_F2	I	5V	Power supply
	32	'+24V2_F4	I	24V	Power supply
YC3	1	DLP_FAN_REM	O	0V/3.3V	Image FAN REMsignal
	2	+24V2_F1	O	24V	Power supply
	3	+5V0_FUSE	O	5V	Power supply
	4	DRM_HEAT_REM	O	0V/3.3V	Drum heater REM signal
	5	GND	-	-	Ground
	6	+3.3V2_F1	O	3.3V	Power supply
	7	DLP_TH	I	Analog	Developer thermistor signal
	8	EEP_SDA	I/O	0V/3.3V	Unit EEPROM communication data signal
	9	EEP_SCL	O	0V/3.3V	Unit EEPROM communication CLK signal
	10	ERASER_BK_REM	O	0V/3.3V	Eraser K REM signal
	11	ERASER_PWM	O	Analog	Eraser current control signal
	12	GND	-	-	Ground
	13	TPC_BK	I	0V/3.3V	Toner sensor K signal
	14	TPC_Y	I	0V/3.3V	Toner sensor Y signal
	15	TPC_C	I	0V/3.3V	Toner sensor C signal
	16	TPC_M	I	0V/3.3V	Toner sensor M signal
	17	ERASER_COL_REM	O	0V/3.3V	Eraser (Color) REM signal
	18	DRM_EEP_SEL1	O	0V/3.3V	Drum EEPROM select signal2
	19	DRM_EEP_SEL0	O	0V/3.3V	Drum EEPROM select signal1
YC4	1	GND	-	-	Ground
	2	+24V3_IL_F1_FET1	O	24V	Interlock power supply
	3	FSR_OFFSET_CNT	O	Analog	Control signal
	4	+3.3V2_LED	O	3.3V	Power supply
	5	GND	-	-	Ground
	6	IH_CORE_HP	I	Analog	Sensor signal
	7	IHMOT_2B	O	0V/24V	Motor output
	8	IHMOT_2A	O	0V/24V	Motor output
	9	IHMOT_1A	O	0V/24V	Motor output
	10	IHMOT_1B	O	0V/24V	Motor output
YC5	A1	EXMOT_1B	O	0V/24V	Motor output
	A2	EXMOT_1A	O	0V/24V	Motor output
	A3	EXMOT_2B	O	0V/24V	Motor output
	A4	EXMOT_2A	O	0V/24V	Motor output
	A5	SBMOT_1B	O	0V/24V	Motor output
	A6	SBMOT_1A	O	0V/24V	Motor output
	A7	SBMOT_2B	O	0V/24V	Motor output
	A8	SBMOT_2A	O	0V/24V	Motor output
	A9	+3.3V2_LED	O	3.3V	Power supply
	A10	GND	-	-	Ground
	A11	EXMAIN_FULL	I	Analog	Sensor signal
	A12	EX_PAPER_FAN_LOCK_F	O	3.3V	Power supply

Connector	Pin	Signal	I/O	Voltage	Description
YC5	A13	GND	-	-	Ground
	A14	EX_PAPER_FAN_F	I	Analog	Sensor signal
	A15	EXIT_HIGH_UNIT_SET	I	0V/N.C.	Ground/N.C.
	B1	EX_PAPER_FAN_LOCK_R	I	0V/3.3V	Control signal
	B2	GND	-	-	Ground
	B3	EX_PAPER_FAN_R	O	0V/24V	Control signal
	B4	+3.3V2_LED	O	3.3V	Power supply
	B5	GND	-	-	Ground
	B6	EXINNER_FULL	I	Analog	Sensor signal
	B7	+24V2_F1	O	24V	Power supply
	B8	EXSOL1	O	0V/24V	Control signal
	B9	EXSOL1_KEEP	O	0V/24V	Control signal
	B10	+24V2_F1	O	24V	Power supply
	B11	EXSOL2	O	0V/24V	Control signal
	B12	EXSOL2_KEEP	O	0V/24V	Control signal
	B13	+3.3V2_LED	O	3.3V	Power supply
	B14	GND	-	-	Ground
	B15	EX_FEED_SENS	I	Analog	Sensor signal
YC6	1	IH_PWB_FAN_REM	O	0V/24V	Control signal
	2	+24V2_F1	O	24V	Power supply
	3	COIL_FAN1	I	0V/3.3V	Control signal
	4	GND	-	-	Ground
	5	IHCOIL_FAN_LOCK_F	O	0V/24V	Control signal
	6	COIL_FAN1	I	0V/3.3V	Control signal
	7	GND	-	-	Ground
	8	IHCOIL_FAN_LOCK_C	O	0V/24V	Control signal
	9	CONT_FAN_LOCK	I	0V/3.3V	Control signal
	10	GND	-	-	Ground
	11	CONT_FAN	O	0V/24V	Control signal
	12	EX_PI_FAN	I	0V/3.3V	Control signal
	13	GND	-	-	Ground
	14	EX_PI_FAN_LOCK	O	0V/24V	Control signal
YC7	1	+24V2_F3	O	24V	Power supply
	2	COTN_SOL_BK	O	0V/24V	Control signal
	3	+24V2_F3	-	-	Not used
	4	COTN_SOL_M	-	-	Not used
	5	+24V2_F3	-	-	Not used
	6	COTN_SOL_C	-	-	Not used
	7	+24V2_F3	-	-	Not used
	8	COTN_SOL_Y	-	-	Not used

(6)Drum/Developer relay PWB

(6-1)PWB photograph

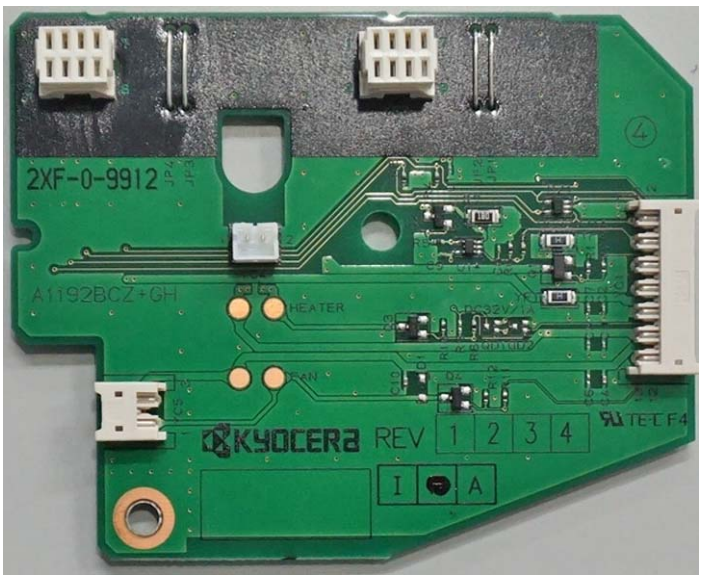

(6-2)Connector position

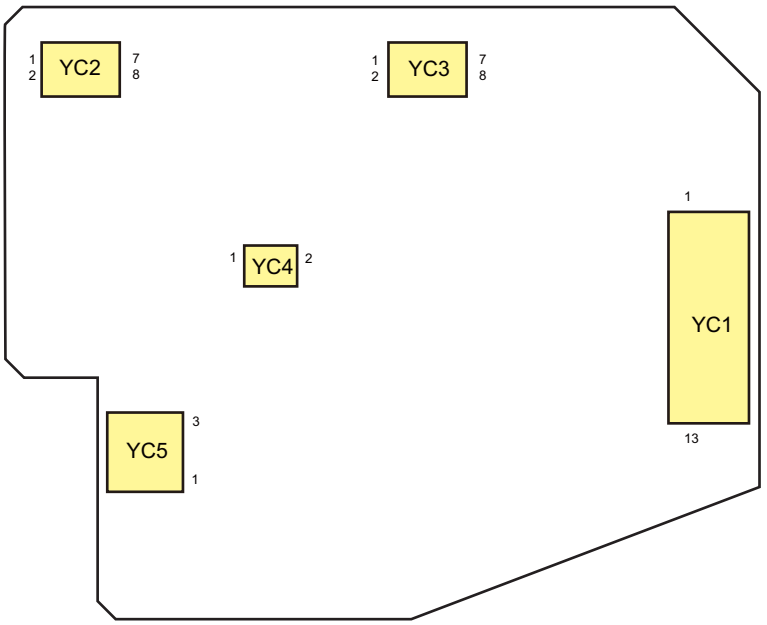

(6-3)Connector lists

Destination

- YC1: Front drive PWB
- YC2: Developer PWB K
- YC3: Drum PWB K
- YC4: Drum heater K
- YC5: Developer fan motor K

Connector	Pin	Signal	I/O	Voltage	Description
YC1	1	TPC_BK	O	0V/3.3V	Toner sensor K signal
	2	GND	-	-	Ground
	3	ERASER_PWM	I	Analog	Eraser current control signal
	4	ERASER_BK	I	0V/3.3V	Eraser K REM signal
	5	EEP_SCL	I	0V/3.3V	Unit EEPROM communication CLK signal
	6	EEP_SDA	I/O	0V/3.3V	Unit EEPROM communication DATA signal
	7	DLP_TH	O	Analog	Developer thermistor signal
	8	+3.3V2	I	3.3V	Power supply
	9	GND	-	-	Ground
	10	DRM_HEAT_REM	I	0V/3.3V	Drum heater REM signal
	11	+5V0_F2	I	5V	Power supply
	12	+24V2_F1	I	24V	Power supply
	13	DLP_FAN_REM	I	0V/3.3V	Developer fan motor REM signal
YC2	1	N.C.	-	-	-
	2	N.C.	-	-	-
	3	TPC_BK	I	0V/3.3V	Toner sensor K signal
	4	DLP_TH	I	Analog	Developer thermistor signal
	5	+3.3V2_F1	O	3.3V	Power supply
	6	EEP_SDA	I/O	0V/3.3V	Unit EEPROM communication CLK signal
	7	EEP_SCL	O	0V/3.3V	Unit EEPROM communication DATA signal
	8	GND	-	-	Ground
YC3	1	A1	O	0/3.3V	EEPROM address signal1
	2	A0	O	0/3.3V	EEPROM address signal0
	3	+5V0_F2BK	O	5V	Power supply
	4	ERASER1	O	Analog	Eraser drive signal
	5	EEP_SCL	O	0/3.3V	Unit EEPROM communication CLK signal
	6	EEP_SDA	I/O	0/3.3V	Unit EEPROM communication DATA signal
	7	+3.3V2_F1	O	3.3V	Power supply
	8	GND	-	-	Ground
YC4	1	+5V0_F2	O	5V	Power supply
	2	DRM_HEAT_REM	O	0/5V	Drum heater REM signal
YC5	1	DLP_FAN_BK	O	0/24V	Developer fan motor K REM signal
	2	+24V2_F1	O	24V	DC24V power output

(7)Main high voltage PWB

(7-1)PWB photograph

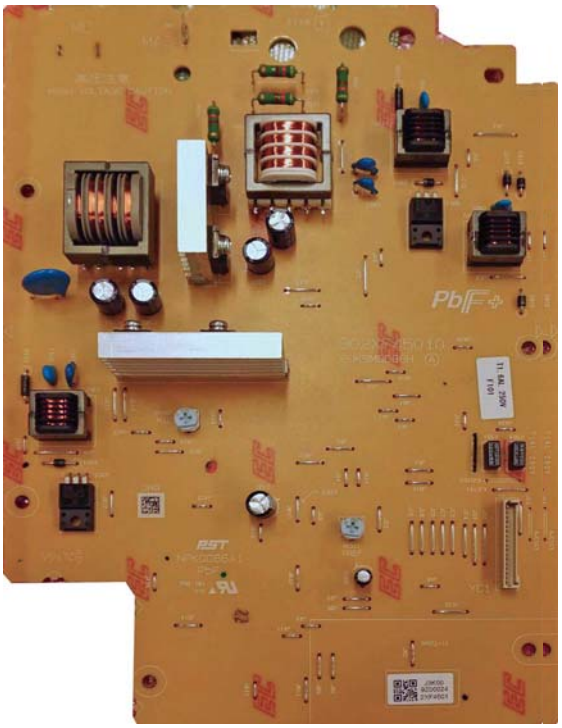

(7-2)Connector position

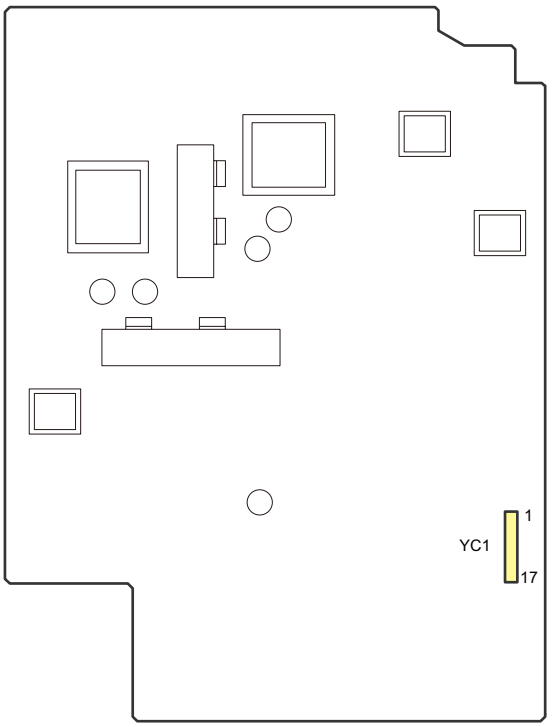

(7-3)Connector lists

Destination

- YC1: Image drive PWB

Connector	Pin	Signal	I/O	Voltage	Description
YC1	1	PGND	-	-	Ground
	2	PGND	-	-	Ground
	3	+24V	I	24V DC	24V DC
	4	+24V	I	24V DC	24V DC
	5	DRM_AC_CLK	I	0V/12V	Main charger AC clock signal
	6	DRM_AC_CNT_K	I	0V/9V	Main charger ACcontrol signal K
	7	DRM_DC_CNT_K	I	0V/14V	Main charger DC control signal K
	8	DRM_ISENS_K	O	Analog 0 to 3.3V	Main charger analog signal K
	9	MAG_AC_CLK_K	I	0V/14V	Developer AC clock signal K
	10	MAG_AC_CNT_K	I	0V/14V	Developer AC control signal K
	11	MAG_DC_CNT_K	I	0V/14V	Developer DC control signal K
	12	MAG_REVERSE_REM	I	0V/16V	Developer reverse bias remote signal
	13	MAG_ISENS_K	O	Analog 0 to 3.3V	Developer analog signal K
	14	SGND	-	-	Ground
	15	MAG_ISENS_SHIFT1	I	0V/14V	Developer current shift signal 1
	16	MAG_ISENS_SHIFT2	I	0V/14V	Developer current shift signal 2
	17	N.C.	-	-	Not used

(8) Transfer high voltage PWB

(8-1)PWB photograph

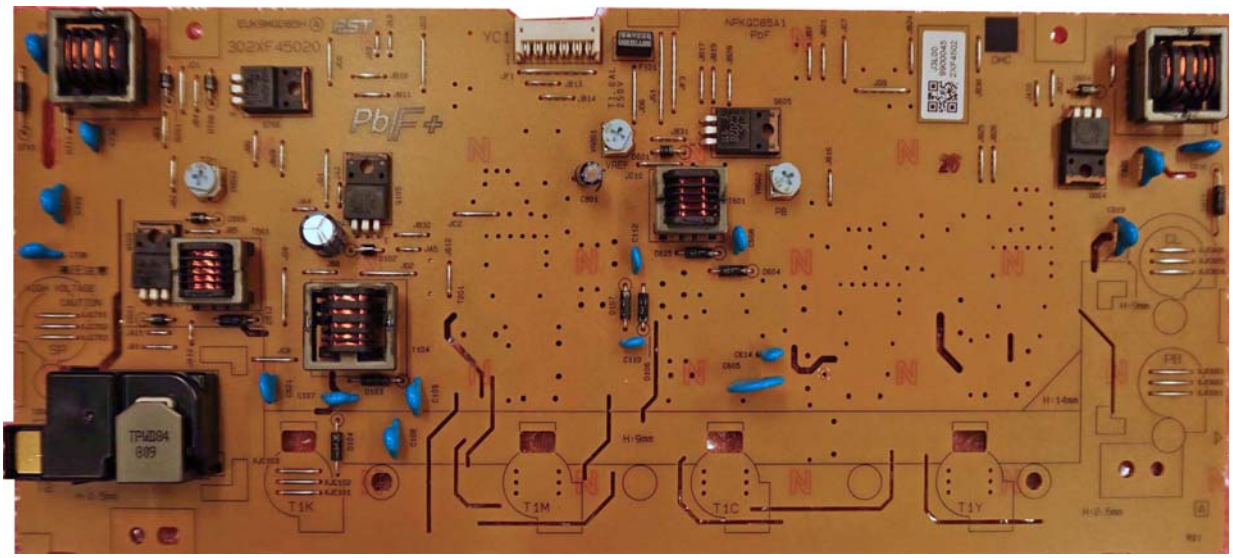

(8-2)Connector position

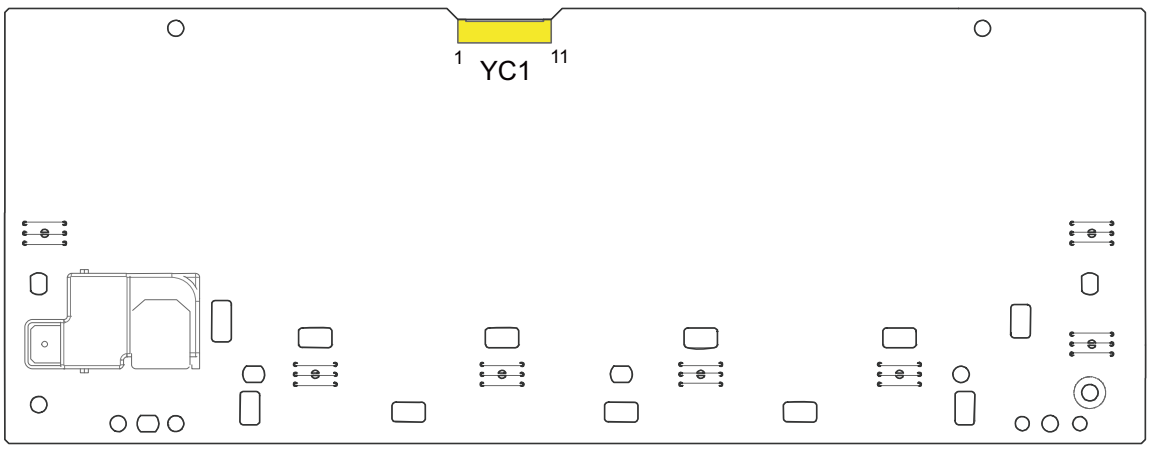

(8-3)Connector lists

Destination

- YC1: Engine PWB

Connector	Pin	Signal	I/O	Voltage	Description
YC1	1	T_REM	I	0V/20V	Transfer remote signal
	2	T2_CNT	I	0V/5V	Secondary transfer control voltage
	3	SP_CNT	I	0V/18V	Separation control voltage
	4	T1_CNT_K	I	0V/5V	Primary transfer control voltage K
	5	T2_OFF_REM	I	0V/20V	Charger current detection
	6	GND	-	-	Primary transfer current detection
	7	N.C.	-	-	Not used
	8	N.C.	-	-	Not used
	9	N.C.	-	-	Not used
	10	CL_CNT	I	0V/5V	Cleaning control voltage
	11	+24V	I	24V DC	DC24V power output

(9)Power supply PWB

(9-1)PWB photograph

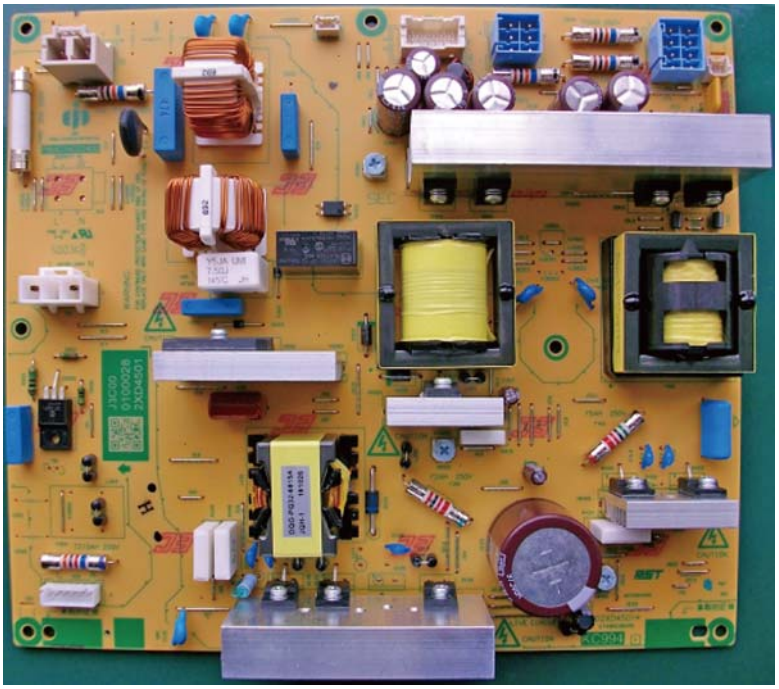

(9-2)Connector position

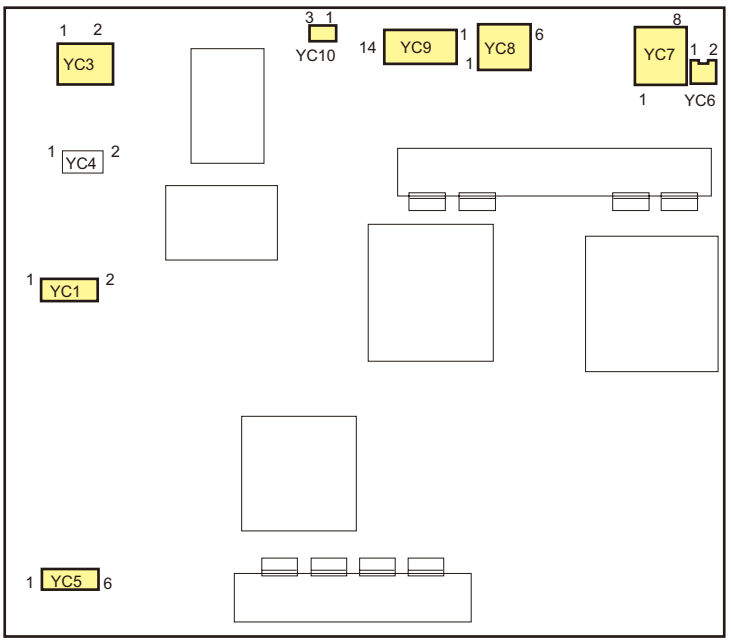

(9-3)Connector lists

Destination

- YC1: AC
- YC3: IH PWB
- YC4: Sub low voltage PWB
- YC5: Cassette heater
- YC6: PF PWB
- YC7: DF PWB, Image drive PWB
- YC8: Engine PWB, Image drive PWB
- YC9: Main PWB
- YC10: Engine PWB

Connector	Pin	Signal	I/O	Voltage	Description
YC1	1	Live	I	AC100V	AC power input
	2	Neutral	I	AC100V AC120V AC230V	AC power input
YC3	1	Live	O	AC100V	AC power output
	2	Neutral	O	AC100V	AC power output
YC4	1	Live	O	AC100v	Not used
	2	Neutral	O	AC100v	Not used
YC5	1	Live	O	AC100V	AC power output
	2	Live	O	AC100V	AC power output
	3	-	-	-	
	4	-	-	-	
	5	Neutral	O	AC100V	AC power output
	6	Neutral	O	AC100V	AC power output
YC6	1	24V1	O	DC24V	DC24V power output
	2	GND	-	-	Ground
YC7	1	24V2	O	DC24V	DC24V power output
	2	24V2	O	DC24V	DC24V power output
	3	24V3	O	DC24V	DC24V power output
	4	24V3	O	DC24V	DC24V power output
	5	GND	-	-	Ground
	6	GND	-	-	Ground
	7	GND	-	-	Ground
	8	GND	-	-	Ground
YC8	1	24V4	O	DC24V	DC24V power output
	2	GND	-	-	Ground
	3	GND	-	-	Ground
	4	24V4	O	DC24V	DC24V power output
	5	24V4	O	DC24V	DC24V power output
	6	GND	-	-	Ground
YC9	1	GND	-	-	Ground
	2	5V0	O	DC5V	DC5V power output
	3	GND	-	-	Ground

Connector	Pin	Signal	I/O	Voltage	Description
YC9	4	5V0	O	DC5V	DC5V power output
	5	GND	-	-	Ground
	6	5V0	O	DC5V	DC5V power output
	7	GND	-	-	Ground
	8	5V0	O	DC5V	DC5V power output
	9	GND	-	-	Ground
	10	5V0	O	DC5V	DC5V power output
	11	GND	-	-	Ground
	12	5V0	O	DC5V	DC5V power output
YC10	1	SLEEP	I	DC5V	Sleep signal
	2	DRM_HEAT_REM	I	DC5V	Cassette heater on/off
	3	GND	-	-	Ground

(10) Operation panel main PWB

(10-1)PWB photograph



(10-2)Connector position

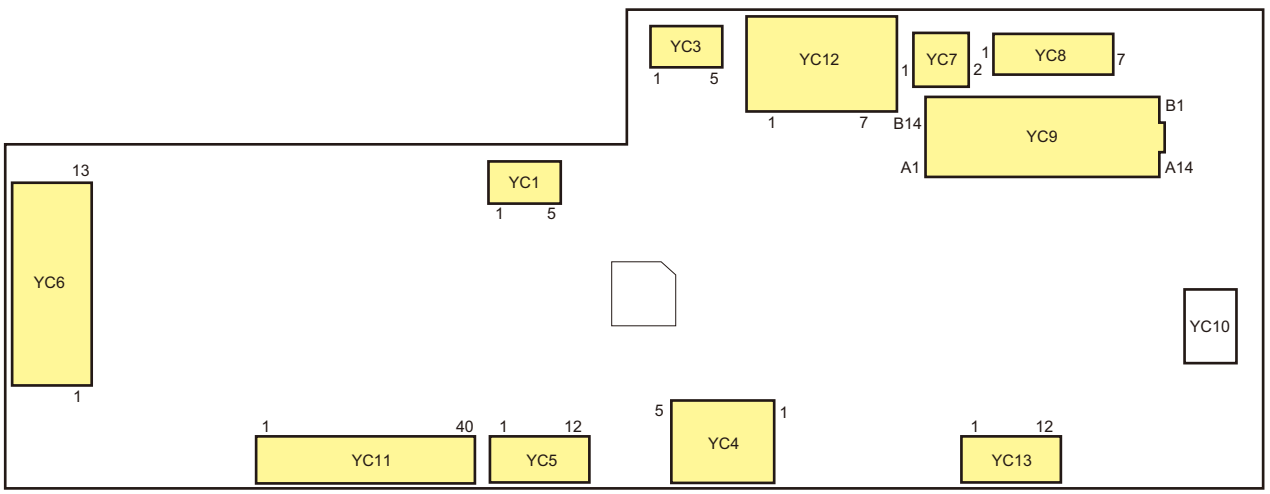

(10-3)Connector lists

Destination

- YC4: NFC PWB
- YC5: Operation panel sub PWB
- YC6: 10 key PWB
- YC7: Speaker
- YC8: JS LED, Motion sensor
- YC9: Main PWB
- YC11: LCD
- YC12: Main PWB
- YC13: Touch panel

Connector	Pin	Signal	I/O	Voltage	Description
YC4	1	+3.3V3_NFC	O	DC 3.3V	DC 3.3V Power output
	2	GND	-	-	Ground
	3	NFC_SWCLK	O	DC 0V/3.3V(pulse)	I2C clock signal
	4	NFC_SWDA	I/O	DC 0V/3.3V(pulse)	I2C data signal
	5	NIRQ	I	DC 0V/1.8V	Interrupt signal
YC5	1	KEY2	I	DC 0V/3.3V(pulse)	Operation key scan return signal2
	2	KEY2	I	DC 0V/3.3V(pulse)	Operation key scan return signal2
	3	SCAN3	O	DC 0V/3.3V(pulse)	Scan signal3
	4	SCAN3	O	DC 0V/3.3V(pulse)	Scan signal3
	5	LED_ENERGYSAVER_N	I	DC 0V/3.3V	Power saving LED control signal
	7	LED_ENERGYSAVER_N	I	DC 0V/3.3V	Power saving LED control signal
	4	LED_ATTENTION_N	O	DC 0V/3.3V	Attention LED control signal
	8	LED_ATTENTION_N	O	DC 0V/3.3V	Attention LED control signal
	9	+5.0V1_PANEL	O	DC 5V	DC 5V Power output
	10	+5.0V1_PANEL	O	DC 5V	DC 5V Power output
	11	LED_PROCESSING_N	O	DC 0V/3.3V	Processing LED control signal
	12	LED_PROCESSING_N	O	DC 0V/3.3V	Processing LED control signal
YC6	1	KEY3	I	DC 0V/3.3V(pulse)	Operation key scan return signal3
	2	KEY2	I	DC 0V/3.3V(pulse)	Operation key scan return signal2
	3	KEY1	I	DC 0V/3.3V(pulse)	Operation key scan return signal1
	4	KEY0	I	DC 0V/3.3V(pulse)	Operation key scan return signal0
	5	SCAN4	O	DC 0V/3.3V(pulse)	Scan signal4
	6	SCAN5	O	DC 0V/3.3V(pulse)	Scan signal5
	7	SCAN6	O	DC 0V/3.3V(pulse)	Scan signal6
	8	SCAN7	O	DC 0V/3.3V(pulse)	Scan signal7
	9	SCAN1	O	DC 0V/3.3V(pulse)	Scan signal1
	10	START_LED	O	DC 0V/3.3V	Start LED control signal
	11	10KEY_DETECT	I	DC 0V/3.3V	Option 10 key connect detection
	12	GND	-	-	Ground
	13	NC	-	-	Not used
YC7	1	SPEAKER_P	O	Analog	Speaker utterance signal (+)
	2	SPEAKER_N	O	Analog	Speaker utterance signal (-)

Connector	Pin	Signal	I/O	Voltage	Description
YC8	1	+5.0V1_PANEL	O	DC 5V	DC 5V power input
	2	JS_LED_REM	O	DC 0V/5V	LED control signal
	3	+3.3V1_HD	O	DC 3.3V	DC 3.3V power output
	4	HD_SWCLK	O	DC 0V/3.3V(pulse)	I2C clock signal
	5	HD_SWDA	I/O	DC 0V/3.3V(pulse)	I2C data signal
	6	INT_HUMAN_DETECT	I	DC 0V/3.3V	Human body detection signal interrupt
	7	GND	-	-	Ground
YC9	A1	+5.0V1_PANEL	I	DC 5V	DC 5V power input
	A2	+5.0V1_PANEL	I	DC 5V	DC 5V power input
	A3	+5.0V1_PANEL	I	DC 5V	DC 5V power input
	A4	+5.0V1_PANEL	I	DC 5V	DC 5V power input
	A5	GND	-	-	Ground
	A6	P2C_WKUP_RDY	O	DC 0V/3.3V	Anykey return signal
	A7	C2P_SCK	I	DC 0V/3.3V(pulse)	Panel clock signal
	A8	P2C_SBSY	O	DC 0V/3.3V	Panel busy signal
	A9	P2C_SDIR	O	DC 0V/3.3V	Panel communication direction signal
	A10	C2P _SDAT	O	DC 0V/3.3V(pulse)	Serial communication data signal
	A11	P2C _SDAT	I	DC 0V/3.3V(pulse)	Serial communication data signal
	A12	C2P_RST	I	DC 0V/3.3V	Panel reset signal
	A13	+3.3V3_NFC	-	DC 3.3V	DC3.3V power input
	A14	I2C_SCL_NFC	I	DC 0V/3.3V(pulse)	I2C clock signal
	B1	I2C_SDA_NFC	I/O	DC 0V/3.3V(pulse)	I2C data signal
	B2	NIRQ	I	DC 0V/3.3V	NFC interrupt signal
	B3	GND	-	-	Ground
	B4	C2P_WKUP	I	DC 0V/3.3V	Panel return signal
	B5	AUDIO	I	Analog	Audio output signal
	B6	LED_PROCESSING	I	DC 0V/3.3V	LED lights during processing signal
	B7	LED_ATTENTION	I	DC 0V/3.3V	Atention LED lighting signal
	B8	INT_HUMAN_DETECT	O	DC 0V/3.3V	Human body detection sensor interrupt signal
	B9	GND	-	-	Ground
	B10	+3.3V1_HD	I	DC 3.3V	DC3.3V power input
	B11	GND	-	-	Ground
	B12	JS_LED_REM	I	DC 0V/3.3V	JS LED control signal
	B13	+5.0V1_PANEL	I	DC 5V	DC 5V power input
	B14	GND	-	-	Ground
YC11	1	LED+	O	DC 0V/5V	LED control signal
	2	LED+	O	DC 0V/5V	LED control signal
	3	VGH	-	DC 21V	LCD high power output
	4	NC	-	-	Not used
	5	NC	-	-	Not used
	6	VGL	-	DC -8V	LCD low power output
	7	U/D	O	DC 0V/3.3V	Vertical writing setting signal
	8	L/R	O	DC 0V/3.3V	Left / right export setting signal
	9	LED-	O	DC0V/5V	LED control signal
	10	LED-	O	DC0V/5V	LED control signal
	11	GND	-	-	Ground

Connector	Pin	Signal	I/O	Voltage	Description
YC11	12	AVDD	-	DC 10.8V	LCD analog power output
	13	SEL	O	DC 0V/3.3V	Mode select signal
	14	NC	-	-	Not used
	15	NC	-	-	Not used
	16	GND	-	-	Ground
	17	NC	-	-	Not used
	18	NC	-	-	Not used
	19	GND	-	-	Ground
	20	RxIN3+	O	Differential 1.075V/ 1.425V	Display data signal
	21	RxIN3-	O	Differential 1.075V/ 1.425V	Display data signal
	22	GND	-	-	Ground
	23	RxINCK+	O	Differential 1.075V/ 1.425V	Display data signal
	24	RxINCK-	O	Differential 1.075V/ 1.425V	Display data signal
	25	GND	-	-	Ground
	26	RxIN2+	O	Differential 1.075V/ 1.425V	Display data signal
	27	RxIN2-	O	Differential 1.075V/ 1.425V	Display data signal
	28	GND	-	-	Ground
	29	RxIN1+	O	Differential 1.075V/ 1.425V	Display data signal
	30	RxIN1-	O	Differential 1.075V/ 1.425V	Display data signal
	31	GND	-	-	Ground
	32	RxIN0+	O	Differential 1.075V/ 1.425V	Display data signal
	33	RxIN0-	O	Differential 1.075V/ 1.425V	Display data signal
	34	GND	-	-	Ground
	35	STBYB	O	DC 0V/3.3V	Standby signal
	36	RESET	O	DC 0V/3.3V	Reset signal
	37	NC	-	-	Not used
	38	VDD	-	DC 3.3V	LCD Driver power output
	39	VDD	-	DC 3.3V	LCD Driver power output
	40	VCOM	O	DC 3.7V	LCD Common power output
YC12	1	GND	-	-	Ground
	2	LCD_OFF	I	DC 0V/3.3V	LCD supply sequence control signal
	3	LOCKN	O	DC 0V/3.3V	Lock signal
	4	GND	-	-	Ground
	5	TX0N	I	DC 0V/3.3V (pulse)	Image data signal
	6	TX0P	I	DC 0V/3.3V (pulse)	Image data signal
	7	GND	-	-	Ground
YC13	1	SWDCLK	O	DC 0V/3.3V (pulse)	Clockignal for debugging
	2	SWDIO	I/O	DC 0V/3.3V (pulse)	Data signal for debugging
	3	GND	-	-	Ground
	4	NC	-	-	Not used

Connector	Pin	Signal	I/O	Voltage	Description
YC13	5	VDD	O	DC 3.3V	DC 3.3V power output
	6	VDD	O	DC 3.3V	DC 3.3V power output
	7	SCL	O	DC 0V/3.3V (pulse)	I2C clock signal
	8	SDA	I/O	DC 0V/3.3V (pulse)	I2C data signal
	9	INT	I/O	DC 0V/3.3V	Toutch panel Interrupt signal
	10	RST	O	DC 0V/3.3V	Toutch panel reset signal
	11	GND	-	-	Ground
	12	GND	-	-	Ground

(11)IH PWB

(11-1)PWB photograph

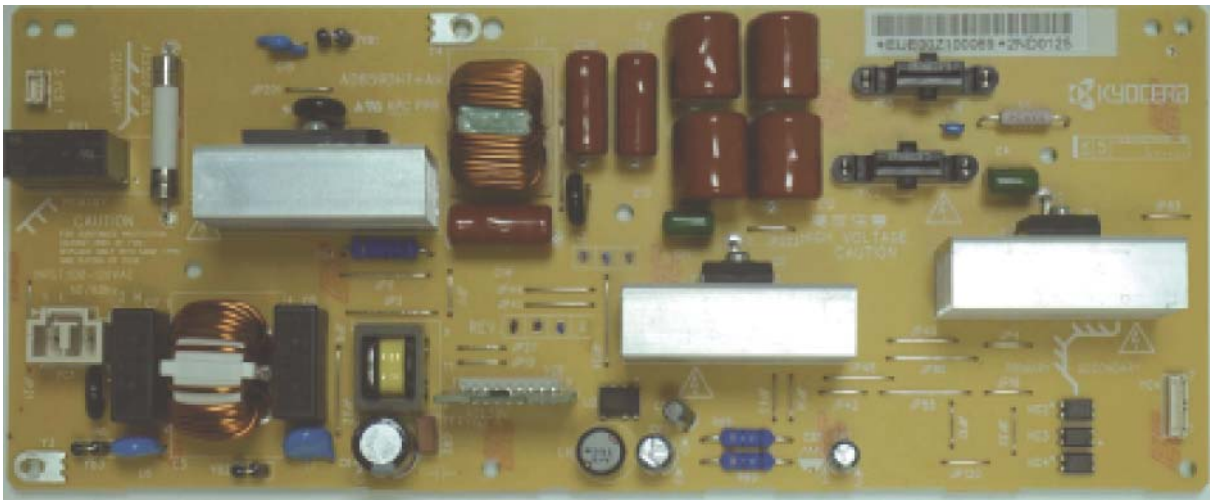

(11-2)Connector position

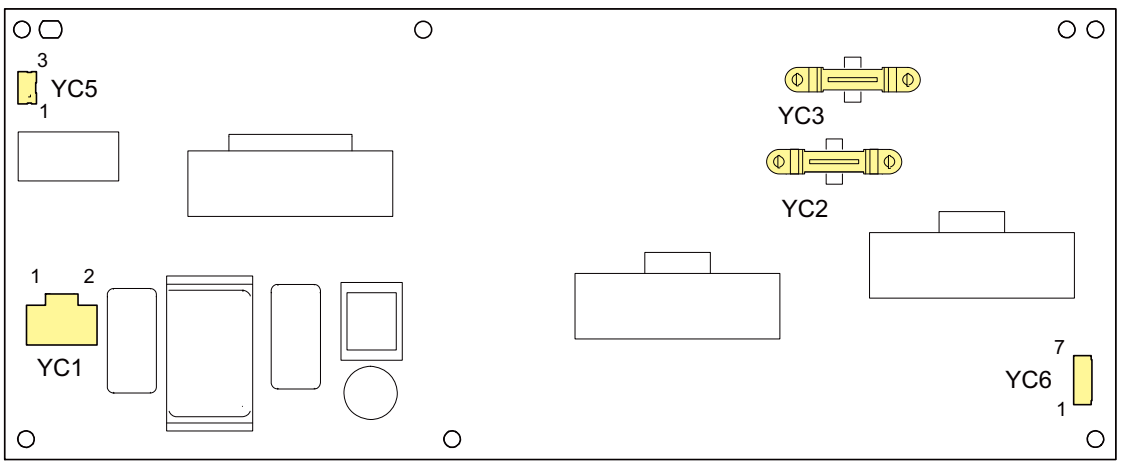

(11-3)Connector lists

Destination

- YC1: Power supply PWB
- YC2: IH unit
- YC3: IH unit
- YC4: Engine PWB
- YC5: Engine PWB

Connector	Pin	Signal	I/O	Voltage	Description
YC1	1	LIVE	I	AC120V AC 220 to 240 V	AC power input
	2	NEUTRAL	I	AC120V AC 220 to 240 V	AC power input
YC2	1	VS	O	AC65V to 160V	Resonant circuit output to the IH coil
YC3	1	COIL_COM	O	AC65V to 160V	Resonant circuit output to the IH coil
YC4	1	IH_RXD	O	DC0V/3.3V(pulse)	Serial communication data signal
	2	IH_TXD	I	DC0V/3.3V(pulse)	Serial communication data signal
	3	IH_ERROR	O	DC0V/3.3V	IH error signal
	4	IH_IGBT_CLK_LOW	I	DC0V/3.3V(pulse)	IH clock signal (Low)
	5	IH_IGBT_CLK_HIGH	I	DC0V/3.3V(pulse)	IH Clock signal (High)
	6	3.3V2_FUSE	I	DC3.3V	DC3.3V power input
	7	GND	-	-	Ground
YC5	1	+24V2	I	DC24V	DC24V power input
	2	IH_RELAY	I	DC0V/3.3V	IH relay signal
	3	GND	-	-	Ground

(12)Fuser high voltage PWB

(12-1)PWB photograph

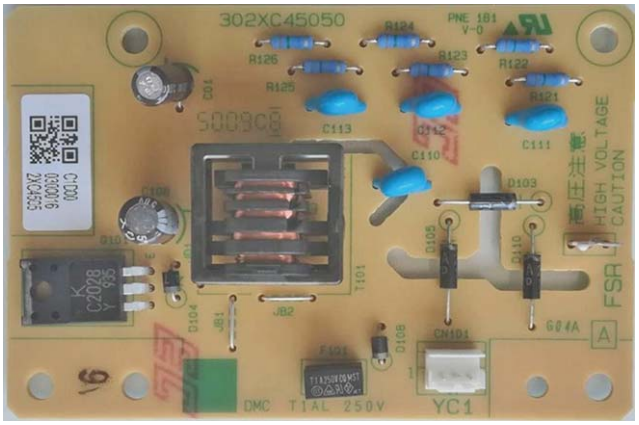

(12-2)Connector position

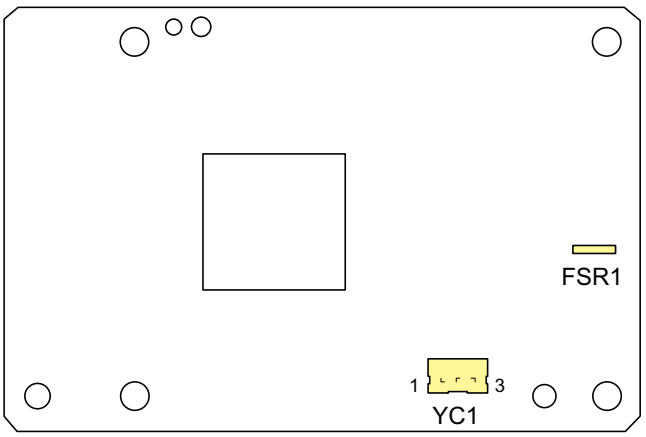

(12-3)Connector lists

Destination

- YC1: Image drive PWB
- FSR1: Fuser discharge needle

Connector	Pin	Signal	I/O	Voltage	Description
YC1	1	FSR_OFFSET_CNT	I	Analog	Fuser high voltage control voltage
	2	+24V3_IL_F1_FET1	I	DC24V	DC24V power input
	3	GND	-	-	Ground
FSR1		SP_CNT	O	Analog	Fuser high voltage output

8 - 2 Description for PWB (OPTION)

(1)PF PWB (PF-7140)

(1-1)PWB photograph

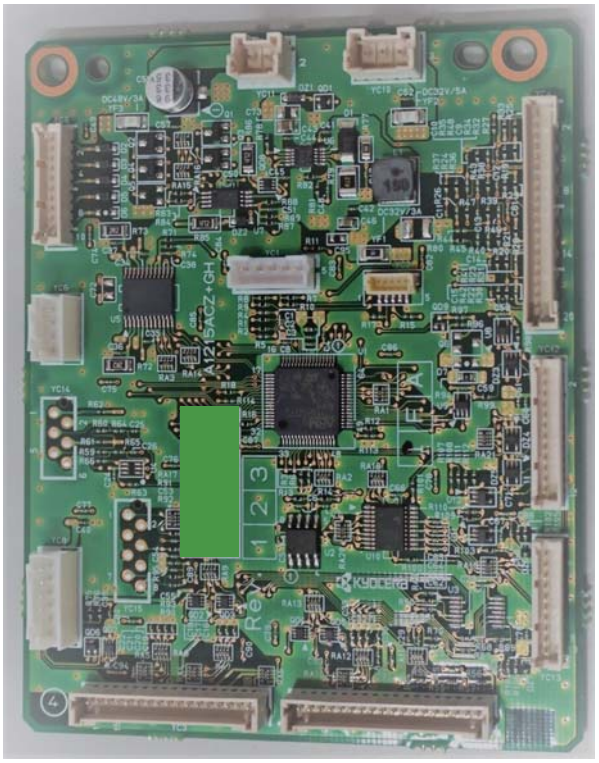

(1-2)Connector position

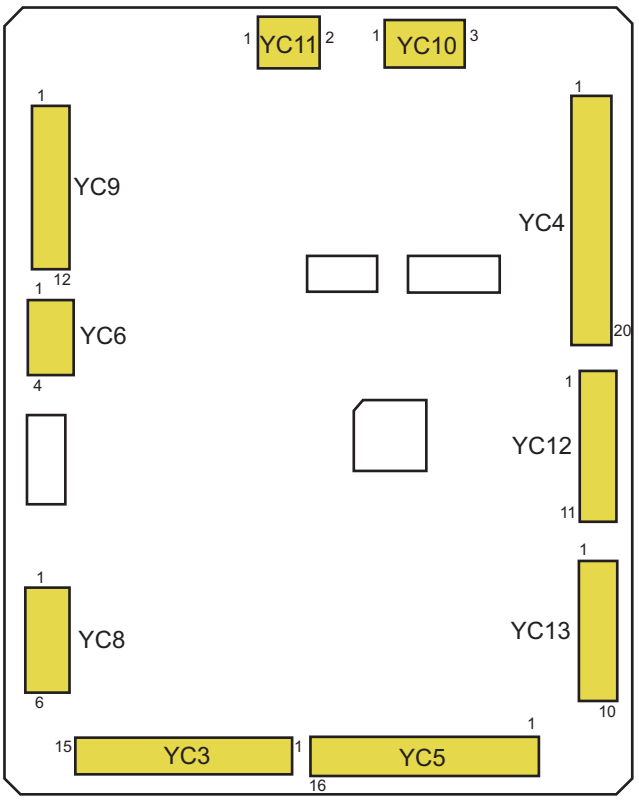

(1-3)Connector lists

Destination

- YC3: PF paper sensor 1, PF upper paper level sensor 1,PF lower paper level sensor 1, PF paper length sensor 1, PF cassette sensor 1
- YC4: PF lift upper limit sensor 1/2, PF conveying sensor 1/2, PF right cover switch, PF paper width switch 1/2
- YC5: PF paper sensor 2, PF upper paper level sensor 2,PF lower paper level sensor 2, PF paper length sensor 2, PF cassette sensor 2
- YC6: PF lift motor 1/2
- YC8: PF paper feed motor
- YC9: PF conveying clutch 1/2, PF paper feed clutch 1/2
- YC10: PF PWB (PF-7120)
- YC11: Power supply PWB
- YC12: Engine PWB
- YC13: PF PWB (PF-7120)

Connector	Pin	Signal	I/O	Voltage	Description
YC3	1	3.3V2_LED	O	Analog	sensor power output
	2	GND	-	-	Ground
	3	CAS1_EMPTY	I	0/3.3V	Cassette1 paper empty sensor 1: On/Off
	4	3.3V2_LED	O	Analog	sensor power output
	5	GND	-	-	Ground
	6	CAS1_QUANT1	I	0/3.3V	Cassette1 upper paper level sensor : On/Off
	7	3.3V2_LED	O	Analog	sensor power output
	8	GND	-	-	Ground
	9	CAS1_QUANT2	I	0/3.3V	Cassette1 lower paper level sensor : On/Off
	10	GND	-	-	Ground
	11	CAS1_SIZE1_SW	I	0/3.3V	Cassette1 paper length switch 1: On/Off
	12	GND	-	-	Ground
	13	CAS1_SIZE2_SW	I	0/3.3V	Cassette1 paper length switch 2: On/Off
	14	GND	-	-	Ground
	15	CAS1_SIZE3_SW	I	0/3.3V	Cassette1 paper length switch 3: On/Off
	16	GND	-	-	Ground
	17	CAS1_OPEN	I	0/3.3V	Cassette switch 1: On/Off
YC4	1	3.3V2_LED	O	Analog	sensor power output
	2	GND	-	-	Ground
	3	ULIM_SW1	I	0/3.3V	Cassette1 lift upper limit sensor 1: On/Off
	4	3.3V2	O	3.3V	DC3.3V power output
	5	VER_SENS_1	I	0/3.3V	PF conveying sensor 1: On/Off
	6	GND	-	-	Ground
	7	COVER_OPEN	I	0/3.3V	PF right cover switch: On/Off
	8	GND	-	-	Ground
	9	3.3V2_H_LED	O	Analog	sensor power output
	10	GND	-	-	Ground
	11	ULIM_SW2	I	0/3.3V	Cassette2 lift upper limit sensor 2: On/Off
	12	3.3V2_H	O	3.3V	DC3.3V power output

Connector	Pin	Signal	I/O	Voltage	Description
	13	VER_SENS2	I	0/3.3V	PF conveying sensor 2: On/Off
	14	GND	-	-	Ground
	15	N.C.	-	-	-
	16	CAS1_WSIZE	I	0/3.3V	PF paper width sensor 1: On/Off
	17	GND	-	-	Ground
	18	N.C.	-	-	-
	19	CAS2_WSIZE	I	0/3.3V	PF paper width sensor 2: On/Off
	20	GND	-	-	Ground
YC5	1	3.3V2_H_LED	O	Analog	sensor power output
	2	GND	-	-	Ground
	3	CAS2_EMPTY	I	0/3.3V	Cassette2 paper empty sensor 1: On/Off
	4	3.3V2_LED	O	Analog	sensor power output
	5	GND	-	-	Ground
	6	CAS2_QUANT1	I	0/3.3V	Cassette2 upper paper level sensor : On/Off
	7	3.3V2_LED	O	Analog	sensor power output
	8	GND	-	-	Ground
	9	CAS2_QUANT2	I	0/3.3V	Cassette2 lower paper level sensor : On/Off
	10	GND	-	-	Ground
	11	CAS2_SIZE1_SW	I	0/3.3V	Cassette2 paper length switch 1: On/Off
	12	GND	-	-	Ground
	13	CAS2_SIZE2_SW	I	0/3.3V	Cassette2 paper length switch 2: On/Off
	14	GND	-	-	Ground
	15	CAS2_SIZE3_SW	I	0/3.3V	Cassette2 paper length switch 3: On/Off
	16	GND	-	-	Ground
	17	CAS2_OPEN	I	0/3.3V	Cassette switch2: On/Off
	18	NC	-	-	-
YC6	1	L_MOT1_RET	O	0/24V	Cassette1 lift motor 1 control signal
	2	L_MOT1_DR	O	0/24V	Cassette1 lift motor 1 control signal
	3	L_MOT2_RET	O	0/24V	Cassette2 lift motor 2 control signal
	4	L_MOT2_DR	O	0/24V	Cassette2 lift motor 2 control signal
YC8	1	24V2_F1	O	24V	DC24V power output
	2	GND	-	-	Ground
	3	MMOT_REM	O	0/5V	PF paper feed motor remote signal
	4	MMOT_CLK	O	0/5V	PF paper feed motor clock signal
	5	MMOT_RDY	I	0/3.3V	PF paper feed motor ready signal
	6	MMOT_DIR	O	0/5V	PF paper feed motor rotation switching signal
YC9	1	VER_CL1	O	0/24V	PF conveying clutch 1: On/Off
	2	24V2_F1	-	24V	DC24V power output
	3	FEED_CL1	O	0/24V	PF paper feed clutch 1: On/Off
	4	24V2_F1	-	24V	DC24V power output
	5	VER_CL2	O	0/24V	PF conveying clutch 2: On/Off
	6	24V2_F1	-	24V	DC24V power output
	7	FEED_CL2	O	0/24V	PF paper feed clutch 2: On/Off
	8	24V2_F1	-	24V	DC24V power output
	9	HDR_CL2	-	-	-
	10	24V2_F1	-	-	-

Connector	Pin	Signal	I/O	Voltage	Description
YC10	1	GND	-	-	Ground
	2	GND	-	-	Ground
	3	+24V2_F2	O	24V	DC24V power output
YC11	1	24V2	I	24V	DC24V power output
	2	GND	-	-	Ground
YC12	1	VER_SENS2	O	0/3.3V	PF conveying sensor 2: On/Off
	2	VER_SENS1	O	0/3.3V	PF conveying sensor 1: On/Off
	3	3.3V3	I	3.3V	DC3.3V power input
	4	GND	-	-	Ground
	5	PF_CAS1_SEL	I	0/3.3V	PF Serial communication data Cassette 1 select signal
	6	PF_CAS2_SEL	I	0/3.3V	PF Serial communication data Cassette 2 select signal
	7	EN_CLK	I	0/3.3V	PF Serial communication data CLK signal
	8	EN_RDY	O	0/3.3V	PF Serial communication data RDY signal
	9	EN_SDO	O	0/3.3V	PF Serial communication data DATA signal
	10	EN_SDI	I	0/3.3V	PF Serial communication data DATA signal
	11	EN_PAUSE	I	0/3.3V	PF Pause signal
	12	PF_CAS_OPEN	O	0/3.3V	PF Cassette open/close signal
YC13	1	AN_PF_CAS_OPEN	I	0/3.3V	SidePF Cassette open/close signal
	2	AN_PF_PAUSE	O	0/3.3V	SidePF Pause signal
	3	AN_PF_SDI	O	0/3.3V	SidePF Serial communication data DATA signal
	4	AN_PF_SDO	I	0/3.3V	SidePF Serial communication data DATA signal
	5	AN_PF_RDY	I	0/3.3V	SidePF Serial communication data RDY signal
	6	AN_PF_CLK	O	0/3.3V	SidePF Serial communication data CLK signal
	7	PF_CAS2_SEL	O	0/3.3V	SidePF Serial communication data Cassette 2 select signal
	8	GND	-	-	Ground
	9	3.3V3	O	3.3V	DC3.3V power output
	10	AN_VER_SENS	I	0/3.3V	SidePF conveying sensor: On/Off

(2)PF PWB (PF-7150)

(2-1)PWB photograph

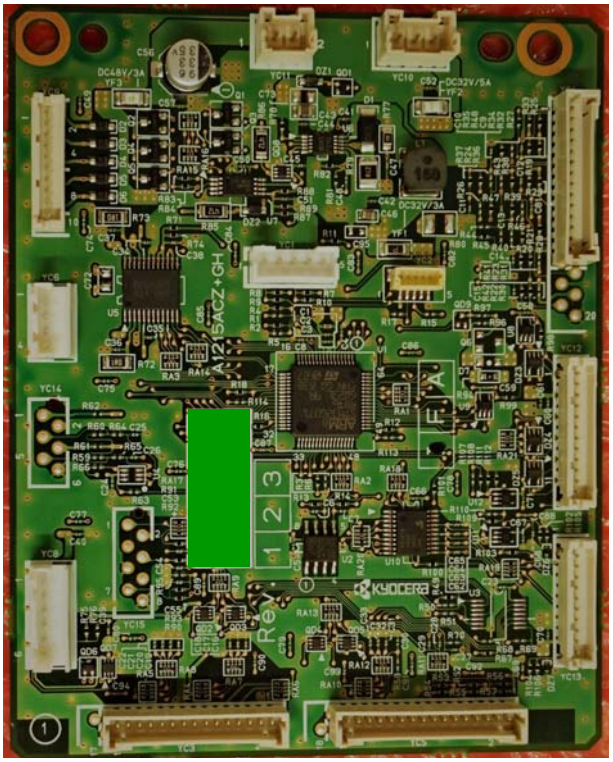

(2-2)Connector position

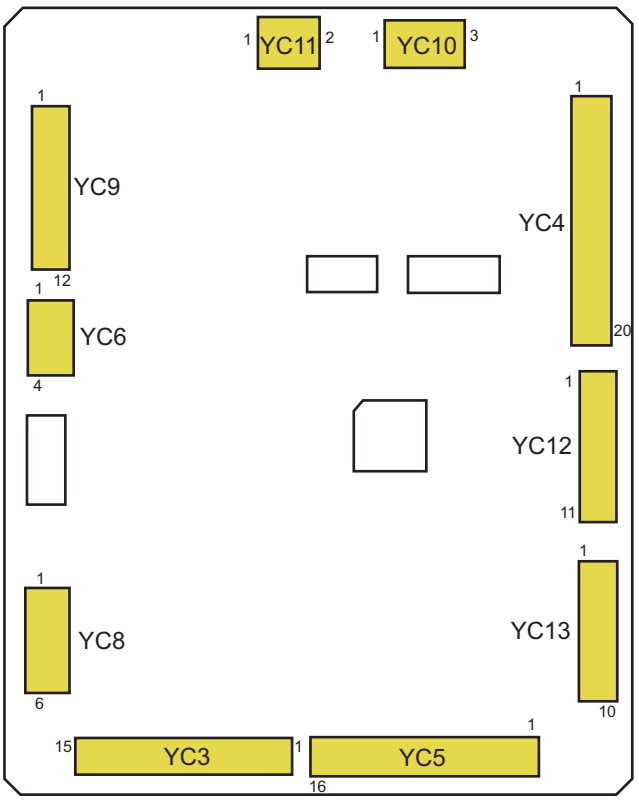

(2-3)Connector lists

Destination

- YC3: PF paper sensor 1, PF upper paper level sensor 1,PF lower paper level sensor 1, PF cassette sensor 1
- YC4: PF lift upper limit sensor 1/2, PF conveying sensor, PF right cover switch, PF horizontal conveying sensor
- YC5: PF paper sensor 2, PF upper paper level sensor 2,PF lower paper level sensor 2, PF cassette sensor 2
- YC6: PF lift motor 1/2
- YC8: PF paper feed motor
- YC9: PF vertical conveying clutch, PF right paper feed clutch 1, PF left paper feed clutch 2, PF horizontal conveying clutch 1/2
- YC10: PF PWB (PF-7120)
- YC11: Power supply PWB
- YC12: Engine PWB
- YC13: PF PWB (PF-7120)

Connector	Pin	Signal	I/O	Voltage	Description
YC3	1	3.3V2_LED	O	Analog	sensor power output
	2	GND	-	-	Ground
	3	CAS1_EMPTY	I	0/3.3V	Cassette1 paper empty sensor 1: On/Off
	4	3.3V2_LED	O	Analog	sensor power output
	5	GND	-	-	Ground
	6	CAS1_QUANT1	I	0/3.3V	Cassette1 upper paper level sensor : On/Off
	7	3.3V2_LED	O	Analog	sensor power output
	8	GND	-	-	Ground
	9	CAS1_QUANT2	I	0/3.3V	Cassette1 lower paper level sensor : On/Off
	10	GND	-	-	Ground
	11	DEK_OPEN	I	0/3.3V	Cassette switch 1: On/Off
	12	NC	-	-	-
	13	NC	-	-	-
	14	NC	-	-	-
	15	NC	-	-	-
	16	NC	-	-	-
	17	NC	-	-	-
YC4	1	3.3V2_LED	O	Analog	sensor power output
	2	GND	-	-	Ground
	3	ULIM_SW1	I	0/3.3V	Cassette1 lift upper limit sensor 1: On/Off
	4	3.3V2	O	3.3V	DC3.3V power output
	5	VER_SENS_1	I	0/3.3V	PF conveying sensor 1: On/Off
	6	GND	-	-	Ground
	7	COVER_OPEN	I	0/3.3V	PF right cover switch: On/Off
	8	GND	-	-	Ground
	9	3.3V2_H_LED	O	Analog	sensor power output
	10	GND	-	-	Ground
	11	ULIM_SW2	I	0/3.3V	Cassette1 lift upper limit sensor 2: On/Off
	12	3.3V2_H	O	3.3V	DC3.3V power output
	13	VER_SENS2	I	0/3.3V	PF conveying sensor 2: On/Off

Connector	Pin	Signal	I/O	Voltage	Description
	14	GND	-	-	Ground
	15	N.C.	-	-	-
	16	N.C.	-	-	-
	17	N.C.	-	-	-
	18	N.C.	-	-	-
	19	N.C.	-	-	-
	20	N.C.	-	-	-
YC5	1	3.3V2_H_LED	O	Analog	sensor power output
	2	GND	-	-	Ground
	3	CAS2_EMPTY	I	0/3.3V	Cassette2 paper empty sensor 1: On/Off
	4	3.3V2_LED	O	Analog	sensor power output
	5	GND	-	-	Ground
	6	CAS2_QUANT1	I	0/3.3V	Cassette2 upper paper level sensor : On/Off
	7	3.3V2_LED	O	Analog	sensor power output
	8	GND	-	-	Ground
	9	CAS2_QUANT2	I	0/3.3V	Cassette2 upper paper level sensor : On/Off
	10	NC	-	-	-
	11	NC	-	-	-
	12	GND	-	-	Ground
	13	DEK_OPEN2	I	0/3.3V	Cassette switch 2: On/Off
	14	NC	-	-	-
	15	NC	-	-	-
	16	NC	-	-	-
	17	NC	-	-	-
	18	NC	-	-	-
YC6	1	L_MOT1_RET	O	0/24V	Cassette1 lift motor 1 control signal
	2	L_MOT1_DR	O	0/24V	Cassette1 lift motor 1 control signal
	3	L_MOT2_RET	O	0/24V	Cassette2 lift motor 2 control signal
	4	L_MOT2_DR	O	0/24V	Cassette2 lift motor 2 control signal
YC8	1	24V2_F1	O	24V	DC24V power output
	2	GND	-	-	Ground
	3	MMOT_REM	O	0/5V	PF paper feed motor remote signal
	4	MMOT_CLK	O	0/5V	PF paper feed motor clock signal
	5	MMOT_RDY	I	0/3.3V	PF paper feed motor ready signal
	6	MMOT_DIR	O	0/5V	PF paper feed motor rotation switching signal
YC9	1	VER_CL1	O	0/24V	PF conveying clutch 1: On/Off
	2	24V2_F1	-	24V	DC24V power output
	3	FEED_CL1	O	0/24V	PF paper feed clutch 1: On/Off
	4	24V2_F1	-	24V	DC24V power output
	5	VER_CL2	O	0/24V	PF conveying clutch 2: On/Off
	6	24V2_F1	-	24V	DC24V power output
	7	FEED_CL2	O	0/24V	PF paper feed clutch 2: On/Off
	8	24V2_F1	-	24V	DC24V power output
	9	HDR_CL2	-	-	-
	10	24V2_F1	-	24V	DC24V power output

Connector	Pin	Signal	I/O	Voltage	Description
YC10	1	GND	-	-	Ground
	2	GND	-	-	Ground
	3	+24V2_F2	O	24V	DC24V power output
YC11	1	24V2	I	24V	DC24V power output
	2	GND	-	-	Ground
YC12	1	VER_SENS2	O	0/3.3V	PF conveying sensor 2: On/Off
	2	VER_SENS1	O	0/3.3V	PF conveying sensor 1: On/Off
	3	3.3V3	I	3.3V	DC3.3V power input
	4	GND	-	-	Ground
	5	PF_CAS1_SEL	I	0/3.3V	PF Serial communication data Cassette 1 select signal
	6	PF_CAS2_SEL	I	0/3.3V	PF Serial communication data Cassette 2 select signal
	7	EN_CLK	I	0/3.3V	PF Serial communication data CLK signal
	8	EN_RDY	O	0/3.3V	PF Serial communication data RDY signal
	9	EN_SDO	O	0/3.3V	PF Serial communication data DATA signal
	10	EN_SDI	I	0/3.3V	PF Serial communication data DATA signal
	11	EN_PAUSE	I	0/3.3V	PF Pause signal
	12	PF_CAS_OPEN	O	0/3.3V	PF Cassette open/close signal
YC13	1	AN_PF_CAS_OPEN	I	0/3.3V	SidePF Cassette open/close signal
	2	AN_PF_PAUSE	O	0/3.3V	SidePF Pause signal
	3	AN_PF_SDI	O	0/3.3V	SidePF Serial communication data DATA signal
	4	AN_PF_SDO	I	0/3.3V	SidePF Serial communication data DATA signal
	5	AN_PF_RDY	I	0/3.3V	SidePF Serial communication data RDY signal
	6	AN_PF_CLK	O	0/3.3V	SidePF Serial communication data CLK signal
	7	PF_CAS2_SEL	O	0/3.3V	SidePF Serial communication data Cassette 2 select signal
	8	GND	-	-	Ground
	9	3.3V3	O	3.3V	DC3.3V power output
	10	AN_VER_SENS	I	0/3.3V	SidePF conveying sensor: On/Off

(3)PF PWB (PF-7120)

(3-1)PWB photograph

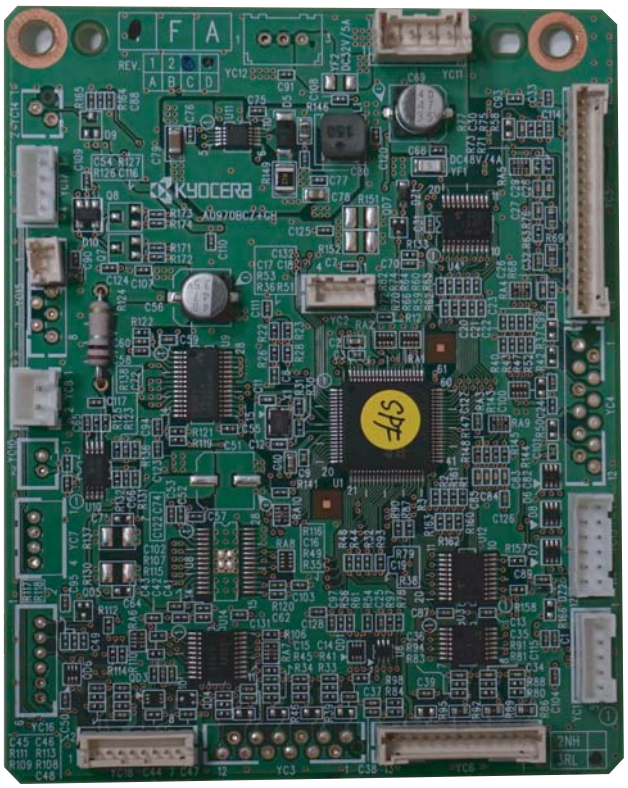

(3-2)Connector position

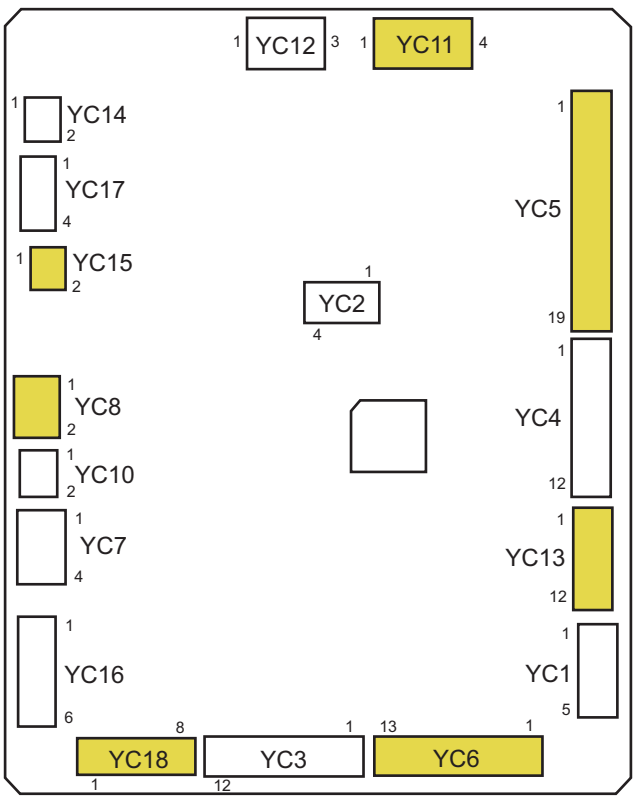

(3-3)Connector lists

Destination

- YC5: PF cassette sensor, PF paper feed solenoid, PF paper sensor, PF lift upper limit sensor, PF paper feed sensor
- YC6: PF upper paper level sensor, PF lower paper level sensor, PF lift lower limit sensor, PF connection sensor
- YC8: Lift motor
- YC11: PF PWB (PF-7140 or PF-7150)
- YC13: PF PWB (PF-7140 or PF-7150)
- YC15: PF paper feed clutch
- YC18: PF conveying motor

Connector	Pin	Signal	I/O	Voltage	Description
YC5	1	GND	-	-	Ground
	2	CVROP_SW	I	DC0V/3.3V	Cassette sensor: On/Off
	3	VER_CL	-	-	Not used
	4	+24V2_F1	-	-	Not used
	5	VCVSW_3.3V1	-	-	Not used
	6	GND	-	-	Not used
	7	VCVSW	-	-	Not used
	8	+24V2_F1	O	DC24V	DC24V power output
	9	FDR_SOLA	O	DC0V/24V	PF paper feed solenoid (actuate): On/Off
	10	FDR_SOLK	O	DC0V/24V	PF paper feed solenoid (keep): On/Off
	11	EPRSW_3.3V1	O	DC3.3V	DC3.3V power output
	12	GND	-	-	Ground
	13	EPRSW	I	DC0V/3.3V	PF paper sensor: On/Off
	14	RULMSW_3.3V1	O	DC3.3V	DC3.3V power output
	15	3.3V4	-	-	Ground
	16	RULMSW	I	DC0V/3.3V	PF lift upper limit sensor: On/Off
	17	3.3V1	O	DC3.3V	DC3.3V power output
	18	P0RSW	I	DC0V/3.3V	PF paper feed sensor: On/Off
	19	GND	-	-	Ground
YC6	1	LDPSW1_3.3V1	O	DC3.3V	DC3.3V power output
	2	GND	-	-	Ground
	3	LDPSW1	I	DC0V/3.3V	PF upper paper level sensor: On/Off
	4	LDPSW2_3.3V1	O	DC3.3V	DC3.3V power output
	5	GND	-	-	Ground
	6	LDPSW2	I	DC0V/3.3V	PF lower paper level sensor: On/Off
	7	SZSW2_3.3V1	O	DC3.3V	DC3.3V power output
	8	GND	-	-	Ground
	9	SZSW2	I	DC0V/3.3V	PF lift lower limit sensor: On/Off
	10	DEK_OPN1_3.3V2	-	-	Not used
	11	GND	-	-	Ground
	12	DEK_OPN1	I	DC0V/3.3V	PF connection sensor: On/Off
	13	NC	-	-	Not used
YC8	1	OUT2	O	DC0V/24V(pulse)	PF lift motor control signal
	2	OUT1	O	DC0V/24V(pulse)	PF lift motor control signal

Connector	Pin	Signal	I/O	Voltage	Description
YC-11	1	GND	-	-	Ground
	2	GND	-	-	Ground
	3	24V2	I	DC24V	DC24V power input
	4	24V2	I	DC24V	DC24V power input
YC13	1	SDO	O	DC0V/3.3V(pulse)	Serial communication data signal
	2	SDI	I	DC0V/3.3V(pulse)	Serial communication data signal
	3	CLK	I	DC0V/3.3V(pulse)	Clock signal
	4	SEL	I	DC0V/3.3V	Select signal
	5	RDY	O	DC0V/3.3V	Ready signal
	6	PAUSE	I	DC0V/3.3V	Pause signal
	7	DEK_OPN1	O	DC0V/3.3V	Deck open/close signal output
	8	DEK_OPN2	-	-	Not used
	9	+3.3V4	O	DC3.3V	DC3.3V power output
	10	GND	-	-	Ground
	11	SD_FINAL_SENS			
	12	PF_FINAL_SENS	-	-	Not used
YC15	1	FDR_CL	O	DC0V/24V	PF paper feed clutch: On/Off
	2	+24V2_F1	O	DC24V	DC24V power output
YC18	1	FMOT_CH_A	I	DC0V/24V(pulse)	PF paper feed motor control signal
	2	FMOT_CH_B	I	DC0V/24V(pulse)	PF paper feed motor control signal
	3	3.3V	O	DC3.3V	DC3.3V power output
	4	FMOT_DIR	O	DC0V/3.3V	PF paper feed motor rotation switching signal
	5	FMOT_PWM	O	DC0V/3.3V(pulse)	PF paper feed motor drive signal
	6	FMOT_BRAKE	O	DC0V/3.3V	Paper feed motor stop signal
	7	GND	-	-	Ground
	8	+24V2_F1	O	DC24V	DC24V power output

(4)DP PWB (DP-7150)

(4-1)PWB photograph

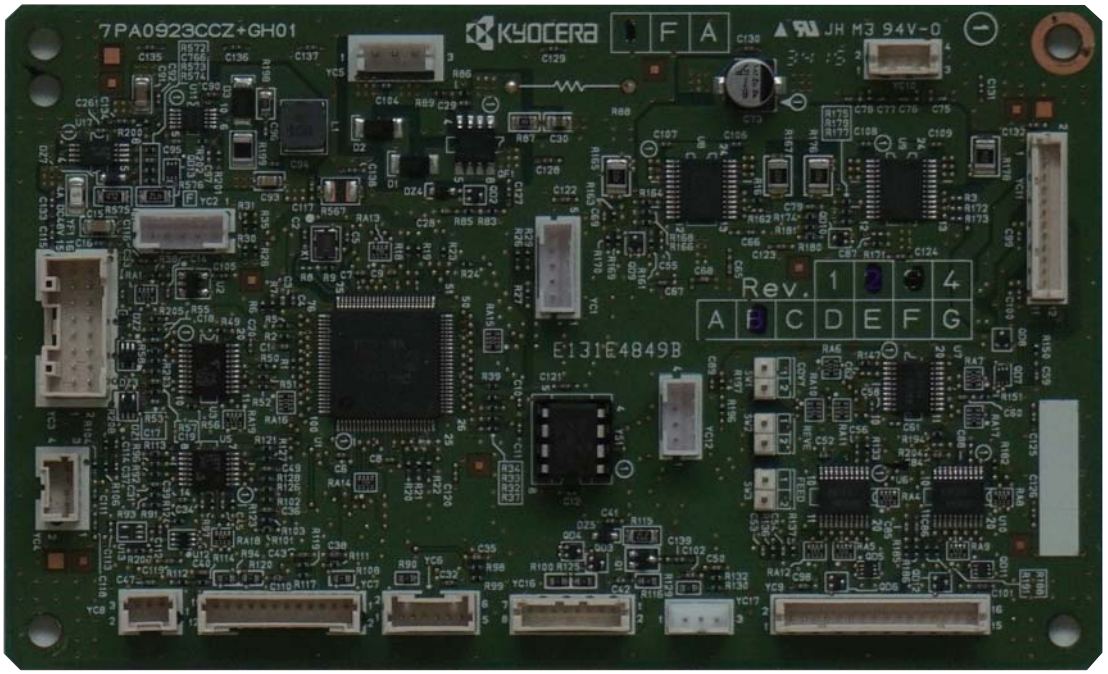

(4-2)Connector position

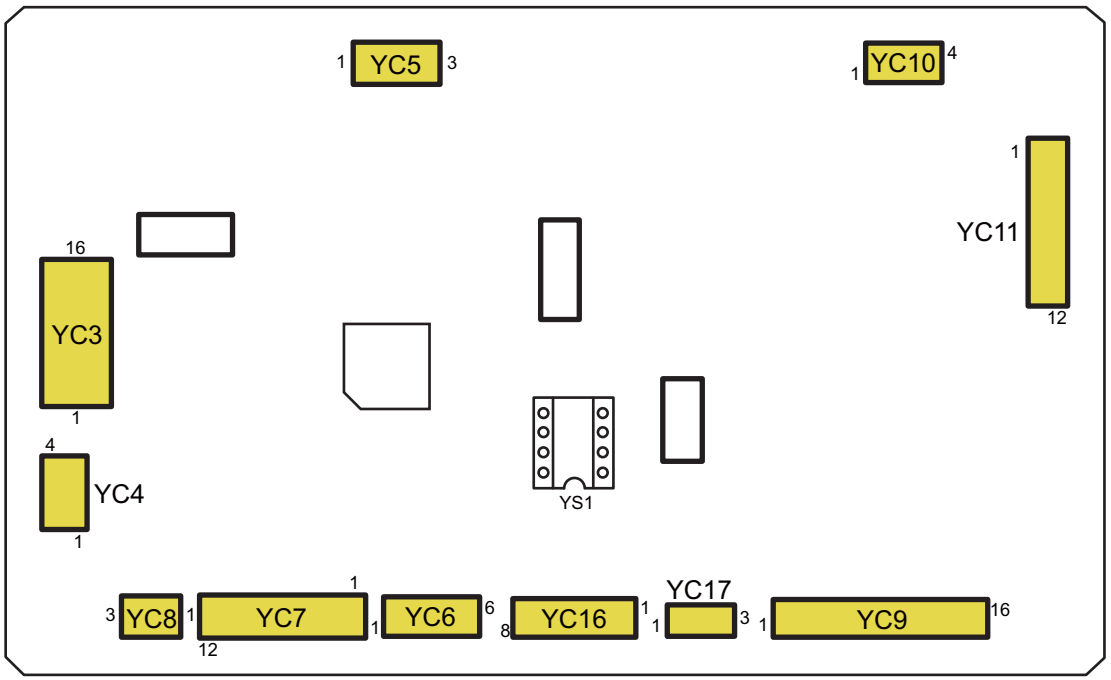

(4-3)Connector lists

Destination

- YC3: Engine PWB
- YC4: Paper feed sensor
- YC5: Top cover sensor
- YC6: Original length sensor, Original width sensor
- YC7: Registration sensor, image sensor sensor, Open/close sensor, Lift lower limit sensor
- YC8: Original sensor
- YC9: Paper feed motor, Conveying motor
- YC10: Feedshift motor
- YC11: Lift motor, Switchback motor
- YC16: LED PWB, Feedshift sensor, Lift upper limit sensor
- YC17: Exit sensor

Connector	Pin	Signal	I/O	Voltage	Description
YC3	1	ENG_TMG	O	DC0V/3.3V	Timing signal
	2	ENG_RDY	O	DC0V/3.3V	Serial communication ready signal
	3	ENG_SEL	I	DC0V/3.3V	Serial communication select signal
	4	ENG_CLK	I	DC0V/3.3V(pulse)	Serial communication clock signal
	5	ENG_SI	I	DC0V/3.3V(pulse)	Serial communication data signal
	6	ENG_SO	O	DC0V/3.3V(pulse)	Serial communication data signal
	7	DP_OPEN	O	DC0V/3.3V	Open/close sensor: On/Off
	8	EN_FD_SW	O	DC0V/3.3V	Paper feed sensor: On/Off
	9	EN_SET_SW	O	DC0V/3.3V	Original sensor: On/Off
	10	+3.3V3	I	DC0V/3.3V	DC3.3V power input
	11	GND	-	-	Ground
	12	GND	-	-	Ground
	13	GND	-	-	Ground
	14	+24V	I	DC24V	DC24V power input
	15	+24V	I	DC24V	DC24V power input
	16	+24V	I	DC24V	DC24V power input
YC4	1	GND	-	-	Ground
	2	FD_SW	I	DC0V/3.3V	Paper feed sensor: On/Off
	3	3.3V	O	DC3.3V	DC3.3V power output
	4	NC	-	-	-
YC5	1	+24V	O	DC24V	DC24V power output
	2	GND	-	-	Ground
	3	+R24V	I	DC0V/24V	Interlock rear 24V
YC6	1	ANODE	O	DC3.3V	DC3.3V power output
	2	GND	-	-	Ground
	3	LNG_SW	I	DC0V/3.3V	Original length sensor: On/Off
	4	3.3V	O	DC3.3V	DC3.3V power output
	5	HSIZE	I	Analog	Original width sensor
	6	GND	-	-	Ground

Connector	Pin	Signal	I/O	Voltage	Description
YC7	1	ANODE	O	DC3.3V	DC3.3V power output
	2	GND	-	-	Ground
	3	RGST_SW	I	DC0V/3.3V	Registration sensor: On/Off
	4	GND	-	-	Ground
	5	image sensor_TMG_SW	I	DC0V/3.3V	image sensor sensor: On/Off
	6	+3.3V	O	DC3.3V	DC3.3V power output
	7	ANODE	O	DC3.3V	DC3.3V power output
	8	GND	-	-	Ground
	9	DP_OPEN	I	DC0V/3.3V	DP open/close sensor: On/Off
	10	ANODE	O	DC3.3V	DC3.3V power output to sensor
	11	GND	-	-	Ground
	12	LF_DNSW	I	DC0V/3.3V	Lift lower limit sensor: On/Off
YC8	1	GND	-	-	Ground
	2	SET_SW	I	DC0V/3.3V	Original sensor: On/Off
	3	3.3V3	O	DC3.3V	DC3.3V power output
YC9	1	FMOT_CH_A	I	DC0V/3.3V(pulse)	Paper feed motor control signal
	2	FMOT_CH_B	I	DC0V/3.3V(pulse)	Paper feed motor control signal
	3	3.3V	O	DC3.3V	DC3.3V power output
	4	FMOT_DIR	O	DC0V/3.3V	Paper feed motor rotation switching signal
	5	FMOT_PWM	O	DC0V/3.3V(pulse)	Paper feed motor drive signal
	6	FMOT_BREAK	O	DC0V/3.3V	Paper feed motor stop signal
	7	GND	-	-	Ground
	8	R24V	O	DC24V	DC24V power output
	9	CMOT_CH_A	I	DC0V/3.3V(pulse)	Conveying motor control signal
	10	CMOT_CH_B	I	DC0V/3.3V(pulse)	Conveying motor control signal
	11	3.3V	O	DC3.3V	DC3.3V power output
	12	CMOT_DIR	O	DC0V/3.3V	Conveying motor rotation switching signal
	13	CMOT_PWM	O	DC0V/3.3V(pulse)	Conveying motor drive signal
	14	CMOT_BREAK	O	DC0V/3.3V	Conveying motor stop signal
	15	GND	-	-	Ground
	16	R24V	O	DC24V	DC24V power output
YC10	1	SFT_A1	O	DC0V/24V(pulse)	Feedshift motor control signal
	2	SFT_B1	O	DC0V/24V(pulse)	Feedshift motor control signal
	3	SFT_A3	O	DC0V/24V(pulse)	Feedshift motor control signal
	4	SFT_B3	O	DC0V/24V(pulse)	Feedshift motor control signal
YC11	1	LIFT_A1	O	DC0V/24V(pulse)	Lift motor control signal
	2	LIFT _B1	O	DC0V/24V(pulse)	Lift motor control signal
	3	LIFT _A3	O	DC0V/24V(pulse)	Lift motor control signal
	4	LIFT _B3	O	DC0V/24V(pulse)	Lift motor control signal
	5	RMOT_CH_A	I	DC0V/3.3V(pulse)	Switchback motor control signal
	6	RMOT_CH_B	I	DC0V/3.3V(pulse)	Switchback motor control signal
	7	3.3V	O	DC3.3V	DC3.3V power output
	8	RMOT_DIR	O	DC0V/3.3V	Switchback motor rotation switching signal
	9	RMOT_PWM	O	DC0V/3.3V(pulse)	Switchback motor drive signal
	10	RMOT_BREAK	O	DC0V/3.3V	Switchback motor stop signal

Connector	Pin	Signal	I/O	Voltage	Description
(YC11)	11	GND	-	-	Ground
	12	R24V	O	DC24V	DC24V power output
YC16	1	LED_REM	I	DC0V/3.3V	LED remote signal
	2	24V	O	DC24V	DC24V power output
	3	ANODE	O	DC3.3V	DC3.3V power output
	4	GND	-	-	Ground
	5	SFT_HP_SW	I	DC0V/3.3V	Feedshift sensor: On/Off
	6	ANODE	O	DC3.3V	DC3.3V power output
	7	GND	-	-	Ground
	8	LF_UPSW	I	DC0V/3.3V	Lift upper limit sensor: On/Off
YC17	1	ANODE	O	DC3.3V	DC3.3V power output
	2	GND	-	-	Ground
	3	EXIT_SW	I	DC0V/3.3V	Exit sensor: On/Off

(5)DP PWB (DP-7160/DP-7170)

(5-1)PWB photograph

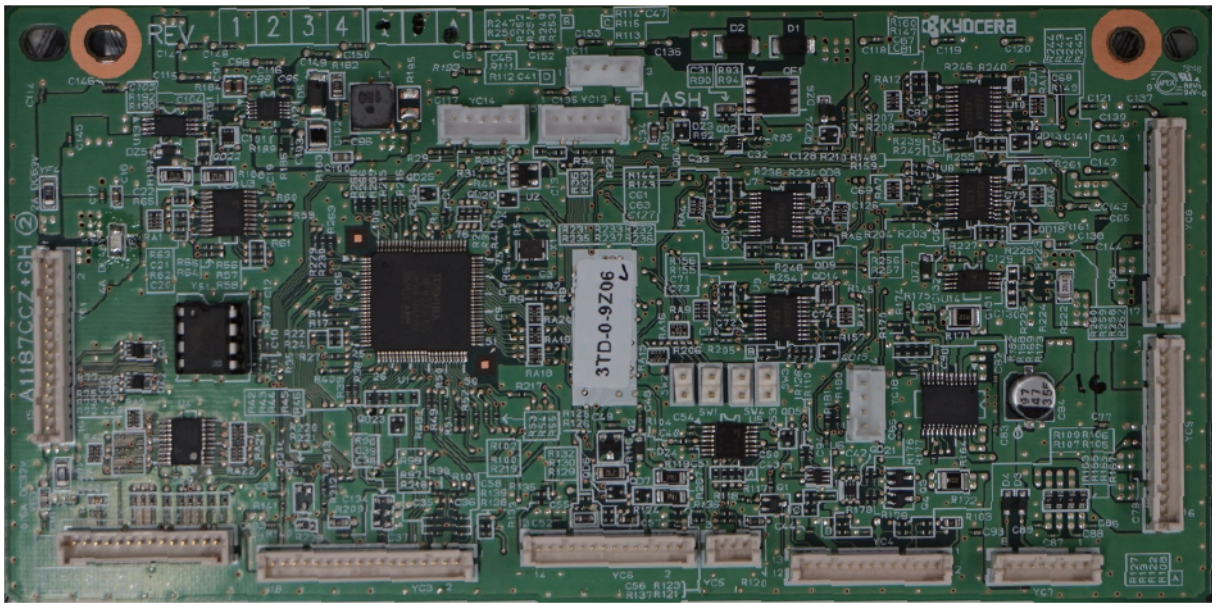

(5-2)Connector position

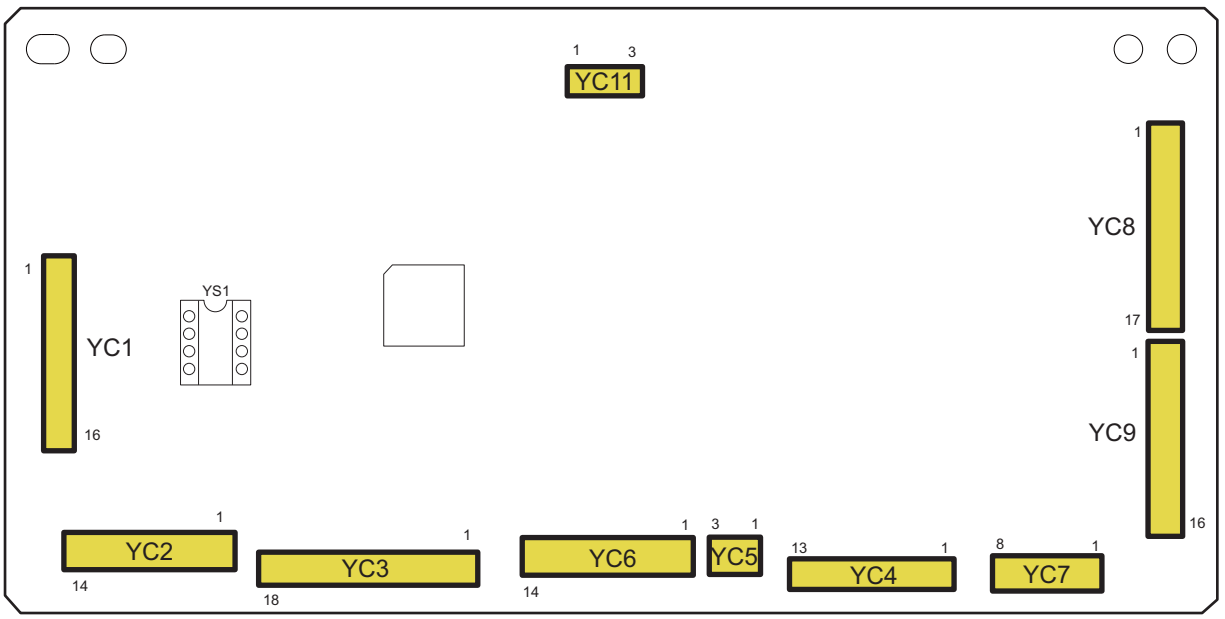

(5-3)Connector lists

Destination

- YC1:Engine PWB
- YC2:SHD PWB
- YC3*1:DP flip-up sensor, DP multi feed sensor, DP slant sensor
- YC4:Original length sensor, Original sensor, Lift lower limit sensor, Original width sensor
- YC5:Lift upper limit sensor
- YC6:Paper feed sensor, Exit sensor, image sensor timing sensor, Open/close sensor
- YC7:Lift motor, Drive fan, CIS fan
- YC8:Paper feed motor, Registration motor
- YC9:Conveying motor, Exit motor
- YC11:Top cover SW

*1:DP-7170 only

Connector	Pin	Signal	I/O	Voltage	Description
YC1	1	ENG_SO	O	DC0V/DC3.3V(Pulse)	Serial communication data signal
	2	ENG_SEL	I	DC0V/DC3.3V	Serial communication select signal
	3	24V	I	DC24V	DC24V power input
	4	24V	I	DC24V	DC24V power input
	5	24V	I	DC24V	DC24V power input
	6	GND	-	-	Ground
	7	GND	-	-	Ground
	8	GND	-	-	Ground
	9	3.3V3	I	DC0V/DC3.3V	DC3.3V power input
	10	EN_SET_SW	O	DC0V/DC3.3V	Original sensor: On/Off
	11	NC	-	-	-
	12	ENG_RDY	I	DC0V/DC3.3V	Serial communication ready signal
	13	DP_OPEN2	O	DC0V/DC3.3V	Open/close sensor: On/Off
	14	PAGEST_image sensor	O	DC0V/DC3.3V	image sensor timing output
	15	ENG_SI	I	DC0V/DC3.3V(Pulse)	Serial communication data signal
	16	ENG_CLK	I	DC0V/DC3.3V(Pulse)	Serial communication clock signal
YC2	1	CS_TMG_SW	I	DC0V/DC3.3V	CIS timing sensor: On/Off
	2	SHD_CLK	O	DC0V/DC3.3V(Pulse)	Serial communication clock signal
	3	SHD_SO	O	DC0V/DC3.3V(Pulse)	Serial communication data signal
	4	SHD_SEL	O	DC0V/DC3.3V	Serial communication select signal
	5	SHD_PAGEST	I	DC0V/DC3.3V	Sub-scanning valid range timing input (VSYNC)
	6	RESET	O	DC0V/DC3.3V	ASIC Reset signal
	7	SHD_OVM	O	DC0V/DC3.3V	Monitoring signal for the sub-scanning valid range signal
	8	SHD_SI	I	DC0V/DC3.3V(Pulse)	Serial communication data signal
	9	SHD_SRDY	O	DC0V/DC3.3V	Serial communication synchronizing signal
	10	NC	-	-	-
	11	24V	O	DC24V	DC24V power output

Connector	Pin	Signal	I/O	Voltage	Description
	12	24V	O	DC24V	DC24V power output
	13	GND	-	-	Ground
	14	GND	-	-	Ground
YC3*1	1	GND	-	-	Ground
	2	SKEW_SW	I	DC0V/DC3.3V	Slant sensor: On/Off
	3	3.3V	O	DC3.3V	DC3.3V power output
	4	SSW_1Piece	I	DC0V/DC3.3V	-
	5	SCLK	O	DC0V/DC3.3V(Pulse)	I2C communication clock signal
	6	SDA	I/O	DC0V/DC3.3V(Pulse)	I2C communication data signal
	7	SSW_2Piece	I	DC0V/DC3.3V	-
	8	GND	-	-	Ground
	9	3.3V	O	DC3.3V	DC3.3V power output
	10	GND	-	-	Ground
	11	24V1	O	DC24V	DC24V power output
	12	3.3V	O	-	-
	13	SPLASH_DET	I	DC3.3V	Flip-up sensor connection detecting
	14	SPLASH_LED_K	I	-	Flip-up sensor cathode :reception side
	15	SPLASH_LED_K	O	-	Flip-up sensor cathode control :reception side
	16	GND	-	-	Ground
	17	SPLASH	I	DC0V/DC3.3V	Flip-up sensor: On/Off
	18	3.3V	O	DC3.3V	DC3.3V power output
YC4	1	LF_DN_ANODE	O	DC1.2V	LED DC1.2V power input
	2	GND	-	-	Ground
	3	LF_DNSW	I	DC0V/DC3.3V	Lift lower limit sensor: On/Off
	4	GND	-	-	Ground
	5	SET_SW	I	DC0V/DC3.3V	Original sensor: On/Off
	6	3.3V3	O	DC3.3V	DC3.3V power output
	7	3.3V	O	DC3.3V	DC3.3V power output
	8	WID_1	I	Analog	Original width sensor: by analog signal
	9	GND	-	-	Ground
	10	3.3V	O	DC3.3V	DC3.3V power output
	11	GND	-	-	Ground
	12	LNG_SW	I	DC0V/DC3.3V	Original length sensor: On/Off
	13	LNG_CLK	O	—	Sensor LED clock signal
YC5	1	LF_UP_ANODE	O	DC1.2V	LED DC1.2V power input
	2	GND	-	-	Ground
	3	LF_UPSW	I	DC0V/DC3.3V	Lift upper limit sensor: On/Off
YC6	1	GND	-	-	Ground
	2	FD_SW	I	DC0V/DC3.3V	Paper feed sensor: On/Off
	3	3.3V	O	DC3.3V	DC3.3V power output
	4	LED_A	O	-	LED PWB anode
	5	LED_REM	I	-	LED remote signal
	6	DP_OPEN_ANODE	O	DC1.2V	LED DC1.2V power input
	7	GND	-	-	Ground
	8	DP_OPEN	I	DC0V/DC3.3V	Open/close sensor: On/Off

Connector	Pin	Signal	I/O	Voltage	Description
	9	EXIT_ANODE	O	DC1.2V	LED DC1.2V power input
	10	GND	-	-	Ground
	11	EXIT_SW	I	DC0V/DC3.3V	Exit sensor: On/Off
	12	3.3V	O	DC3.3V	DC3.3V power output
	13	image sensor_TMG_SW	I	DC0V/DC3.3V	image sensor timing sensor: On/Off
	14	GND	-	-	Ground
YC7	1	LIFT4	O	DC0V/DC24V(Pulse)	Lift motor control signal
	2	LIFT1	O	DC0V/DC24V(Pulse)	Lift motor control signal
	3	LIFT3	O	DC0V/DC24V(Pulse)	Lift motor control signal
	4	LIFT2	O	DC0V/DC24V(Pulse)	Lift motor control signal
	5	FAN1_DRIVE	I	-	Drive fan motor remote signal
	6	R24V1	O	DC24V	DC24V power output
	7	FAN2_DRIVE	I	-	CIS fan motor remote signal
	8	R24V1	O	DC24V	DC24V power output
YC8	1	NC	-	-	-
	2	ENC_A	I	DC0V/DC3.3V(Pulse)	LED DC1.2V power input ChA encoding signal
	3	ENC_B	I	DC0V/DC3.3V(Pulse)	Registration motor ChB encoding signal
	4	3.3[V]	O	DC3.3V	DC3.3V power output
	5	CW/CCW	O	DC0V/DC3.3V	Registration motor rotation direction switch signal
	6	PWM	O	DC0V/DC3.3V(Pulse)	Registration motor PWM signal
	7	BRAKE	O	DC0V/DC3.3V	Registration motor brake signal
	8	PGND	-	-	Ground
	9	24V	O	DC24V	DC24V power output
	10	ENC_A	I	DC0V/DC3.3V(Pulse)	Paper feed motor ChA encoding signal
	11	ENC_B	I	DC0V/DC3.3V(Pulse)	Paper feed motor ChB encoding signal
	12	3.3[V]	O	DC3.3V	DC3.3V power output
	13	CW/CCW	O	DC0V/DC3.3V	Paper feed motor rotation direction switch signal
	14	PWM	O	DC0V/DC3.3V(Pulse)	Paper feed motor PWM signal
	15	BRAKE	O	DC0V/DC3.3V	Paper feed motor brake signal
	16	PGND	-	-	Ground
	17	24V	O	DC24V	DC24V power output
YC9	1	ENC_A	I	DC0V/DC3.3V(Pulse)	Exit motor ChA encoding signal
	2	ENC_B	I	DC0V/DC3.3V(Pulse)	Exit motor ChB encoding signal
	3	3.3[V]	O	DC3.3V	DC3.3V power output
	4	CW/CCW	O	DC0V/DC3.3V	Exit motor rotation direction switch signal
	5	PWM	O	DC0V/DC3.3V(Pulse)	Exit motor PWM signal
	6	BRAKE	O	DC0V/DC3.3V	Exit motor brake signal
	7	PGND	-	-	Ground
	8	24V	O	DC24V	DC24V power output
	9	ENC_A	I	DC0V/DC3.3V(Pulse)	Conveying motor ChA encoding signal
	10	ENC_B	I	DC0V/DC3.3V(Pulse)	Conveying motor ChB encoding signal
	11	3.3[V]	O	DC3.3V	DC3.3V power output
	12	CW/CCW	O	DC0V/DC3.3V	Conveying motor rotation direction switch signal

Connector	Pin	Signal	I/O	Voltage	Description
	13	PWM	O	DC0V/DC3.3V(Pulse)	Conveying motor PWM signal
	14	BRAKE	O	DC0V/DC3.3V	Conveying motor brake signal
	15	PGND	-	-	Ground
	16	24V	O	DC24V	DC24V power output
YC11	1	24V	O	DC24V	DC24V power output
	2	N.C.	-	-	-
	3	R24V	I	DC0V/DC24V	Interlock switch 24V

(6)DP relay PWB (for DP-7160/DP-7170)

(6-1)PWB photograph



(6-2)Connector position

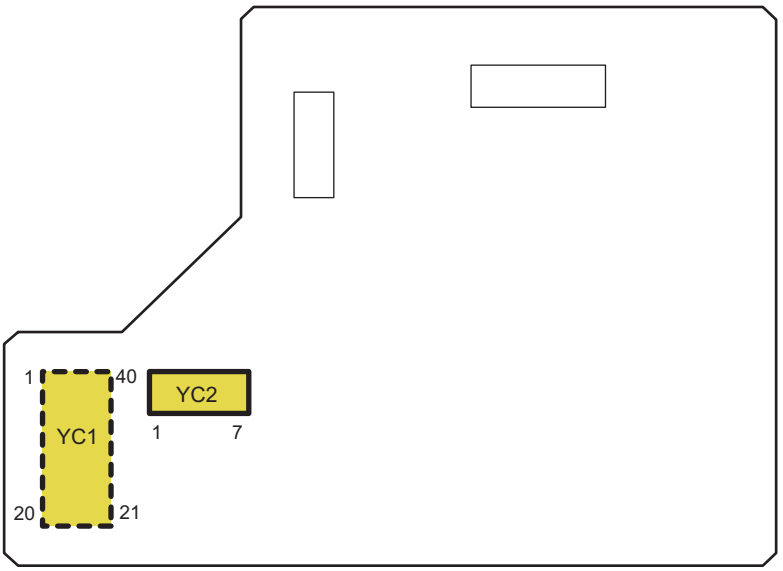

(6-3)Connector lists

Destination

- YC1: Main PWB
- YC2: SHD PWB

Connector	Pin	Signal	I/O	Voltage	Description
YC1	1	DP_RST_N	I	DC 0V/3.3V	System reset input
	2	GND(DP_CONNECTN)	I	LOW	DP relay PWB connection detection
	3	GND	-	-	-
	4	PCIEP_REFCLK_DP2M	O	Differential 0V/0.8V	PCIe emission communication data signal(P)
	5	PCIEN_REFCLK_DP2M	O	Differential 0V/0.8V	PCIe emission communication data signal(N)
	6	GND	-	-	-
	7	GND	-	-	-
	8	PCIEP_M2DP	I	Differential 0.65V/1.15V	PCIe reception communication data signal(P)
	9	PCIEN_M2DP	I	Differential 0.65V/1.15V	PCIe reception communication data signal(N)
	10	GND	-	-	-
	11	GND	-	-	-
	12	PCIEP_DP2M	O	Differential 0.65V/1.15V	PCIe reference clock(P)
	13	PCIEN_DP2M	O	Differential 0.65V/1.15V	PCIe reference clock(N)
	14	GND	-	-	-
	15	GND	-	-	-
	16	+3.3V3_ASIC	I	DC 3.3V	DC3.3V power input
	17	EUSS_DP_CLK0	I	DC 0V/3.3V(pulse)	EUSS SCAN
	18	EUSS_DP_SDO0	I	DC 0V/3.3V	EUSS SCAN
	19	EUSS_DP_SDI0	O	DC 0V/3.3V	EUSS SCAN
	20	EUSS_DP_EN0	I	DC 0V/3.3V	EUSS SCAN
	21	5.0V4	I	DC 5V	DC5V power input
	22	5.0V4	I	DC 5V	DC5V power input
	23	5.0V4	I	DC 5V	DC5V power input
	24	5.0V4	I	DC 5V	DC5V power input
	25	5.0V4	I	DC 5V	DC5V power input
	26	5.0V4	I	DC 5V	DC5V power input
	27	5.0V4	I	DC 5V	DC5V power input
	28	5.0V4	I	DC 5V	DC5V power input
	29	GND	-	-	-
	30	GND	-	-	-
	31	GND	-	-	-
	32	GND	-	-	-
	33	GND	-	-	-
	34	GND	-	-	-
	35	GND	-	-	-
	36	GND	-	-	-
	37	PCIEEP_SWRST_N_M2DP	I	DC 0V/3.3V	PCIex reset input

Connector	Pin	Signal	I/O	Voltage	Description
YC1	38	C2E_SCAN_DP_RDY	O	DC 0V/3.3V	Device Ready notification(DP)
	39	EUSS_DP_INT0	O	DC 0V/3.3V	EUSS SCAN communication normal completion INT
	40	EUSS_DP_CS0	I	DC 0V/3.3V	EUSS SCAN chip select
YC2	1	GND	-	-	-
	2	HTPDN	O	LOW	Detecting synchronization
	3	LOCKN	-	-	-
	4	GND	-	-	-
	5	RX0N	I	Differential 1.05V/1.35V	Image data signal (N)
	6	RX0P	I	Differential 1.05V/1.35V	Image data signal (P)
	7	GND	-	-	-

(7)DF PWB (DF-7100)

(7-1)PWB photograph

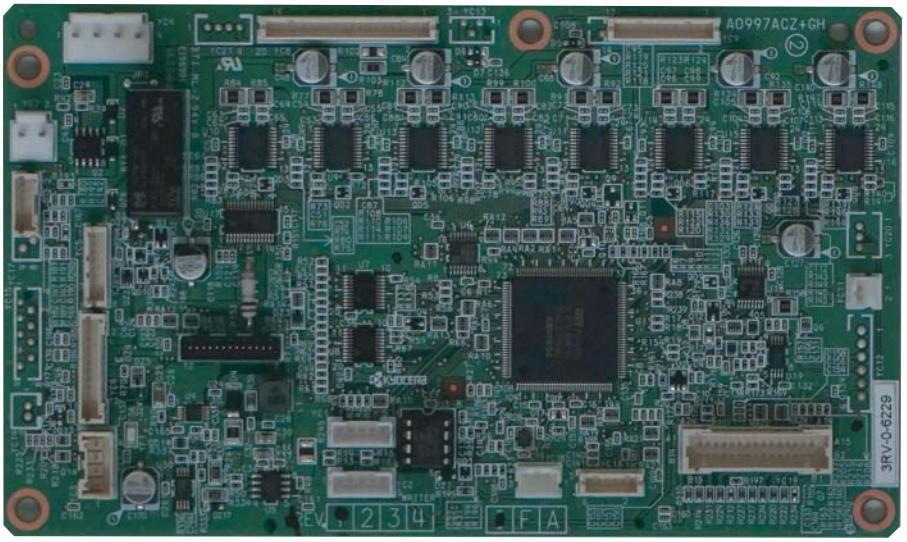

(7-2)Connector position

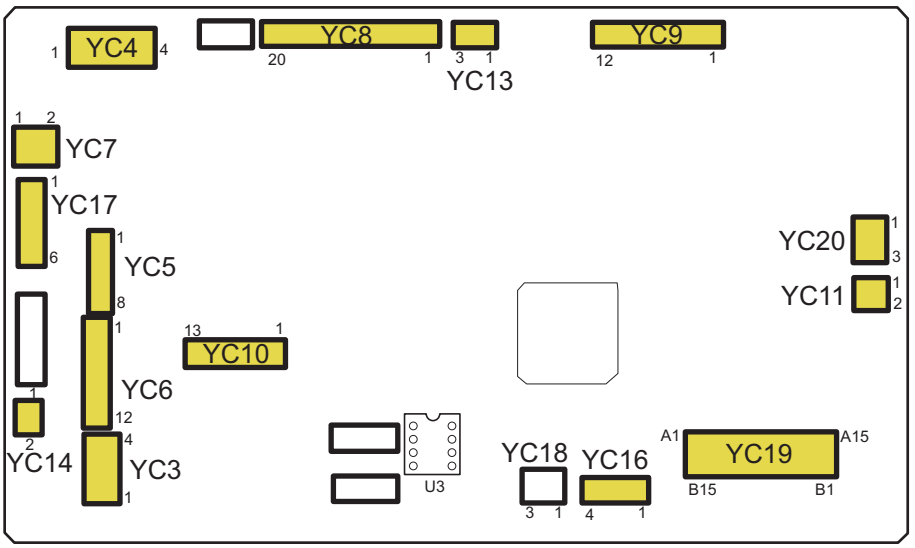

(7-3)Connector lists

Destination

- YC3: Image Drive PWB
- YC4: Front cover sensor
- YC5: Image Drive PWB
- YC6: PH PWB
- YC7: PH PWB
- YC8: Exit motor, Slide motor, Exit release motor, Middle motor, Paper entry motor
- YC9: Paddle motor, Side registration motor 1/2
- YC10: Stapler
- YC11: Tray motor
- YC13: Paper pressing solenoid
- YC14: Paper LED
- YC16: Exit paper full sensor
- YC17: Paddle sensor, Paper entry sensor
- YC19: Side registration sensor 1/2, Tray sensor 1, Bundle exit sensor, Paper pressing sensor 1/2, Adjustment sensor, Slide sensor
- YC20: DF connection sensor

Connector	Pin	Signal	I/O	Voltage	Description
YC3	1	GND	-	-	Ground
	2	GND	-	-	Ground
	3	24V1	I	DC24V	DC24V power input
	4	24V1	I	DC24V	DC24V power input
YC4	1	24V1	O	DC24V	DC24V power output
	2	FRONT COV SIG	I	DC0V/24V	Front cover sensor: On/Off
	3	TOP COV SOURCE	-	-	Not used
	4	TOP COVSIG	-	-	Not used
YC5	1	ENG RDY	O	DC0V/3.3V	Ready signal
	2	ENG SEL	I	DC0V/3.3V	Select signal
	3	ENG DI	I	DC0V/3.3V(pulse)	Serial communication data signal input
	4	ENG DO	O	DC0V/3.3V(pulse)	Serial communication data signal output
	5	ENG PAU	-	-	Not used
	6	DET	-	-	Ground
	7	ENG CLK	I	DC0V/3.3V(pulse)	Serial clock signal
	8	GND	-	-	Ground
YC6	1	5V	-	-	Not used
	2	3.3V	O	DC3.3V	DC3.3V power output
	3	3.3V	O	DC3.3V	DC3.3V power output
	4	GND	-	-	Ground
	5	GND	-	-	Ground
	6	PHPES REM	-	-	Not used
	7	PHMOT REM	O	DC0V/3.3V	PH motor remote signal
	8	PU RDY	I	DC0V/3.3V	Ready signal

Connector	Pin	Signal	I/O	Voltage	Description
(YC6)	9	PU SEL	O	DC0V/3.3V	Select signal
	10	PU CLK	O	DC0V/3.3V(pulse)	Serial clock signal
	11	PU DI	O	DC0V/3.3V(pulse)	Serial communication data signal input
	12	PU DO	I	DC0V/3.3V(pulse)	Serial communication data signal output
YC7	1	GND	-	-	Ground
	2	24V2	O	DC24V	DC24V power output
YC8	1	EJECT MOT 2B	O	DC0V/24V(pulse)	Exit motor control signal
	2	EJECT MOT 1B	O	DC0V/24V(pulse)	Exit motor control signal
	3	EJECT MOT 2A	O	DC0V/24V(pulse)	Exit motor control signal
	4	EJECT MOT 1A	O	DC0V/24V(pulse)	Exit motor control signal
	5	STP MOV MOT 2B	O	DC0V/24V(pulse)	Slide motor control signal
	6	STP MOV MOT 1B	O	DC0V/24V(pulse)	Slide motor control signal
	7	STP MOV MOT 2A	O	DC0V/24V(pulse)	Slide motor control signal
	8	STP MOV MOT 1A	O	DC0V/24V(pulse)	Slide motor control signal
	9	EJE RELS MOT 2B	O	DC0V/24V(pulse)	Exit release motor control signal
	10	EJE RELS MOT 1B	O	DC0V/24V(pulse)	Exit release motor control signal
	11	EJE RELS MOT 2A	O	DC0V/24V(pulse)	Exit release motor control signal
	12	EJE RELS MOT 1A	O	DC0V/24V(pulse)	Exit release motor control signal
	13	MIDDLE MOT 2B	O	DC0V/24V(pulse)	Middle motor control signal
	14	MIDDLE MOT 1B	O	DC0V/24V(pulse)	Middle motor control signal
	15	MIDDLE MOT 2A	O	DC0V/24V(pulse)	Middle motor control signal
	16	MIDDLE MOT 1A	O	DC0V/24V(pulse)	Middle motor control signal
	17	ENTRY MOT 2B	O	DC0V/24V(pulse)	Paper entry motor control signal
	18	ENTRY MOT 1B	O	DC0V/24V(pulse)	Paper entry motor control signal
	19	ENTRY MOT 2A	O	DC0V/24V(pulse)	Paper entry motor control signal
	20	ENTRY MOT 1A	O	DC0V/24V(pulse)	Paper entry motor control signal
YC9	1	PADDLE MOT 2B	O	DC0V/24V(pulse)	Paddle motor control signal
	2	PADDLE MOT 1B	O	DC0V/24V(pulse)	Paddle motor control signal
	3	PADDLE MOT 2A	O	DC0V/24V(pulse)	Paddle motor control signal
	4	PADDLE MOT 1A	O	DC0V/24V(pulse)	Paddle motor control signal
	5	SIDE REG R MOT 2B	O	DC0V/24V(pulse)	Side registration motor 2 control signal
	6	SIDE REG R MOT 1B	O	DC0V/24V(pulse)	Side registration motor 2 control signal
	7	SIDE REG R MOT 2A	O	DC0V/24V(pulse)	Side registration motor 2 control signal
	8	SIDE REG R MOT 1A	O	DC0V/24V(pulse)	Side registration motor 2 control signal
	9	SIDE REG F MOT 2B	O	DC0V/24V(pulse)	Side registration motor 1 control signal
	10	SIDE REG F MOT 1B	O	DC0V/24V(pulse)	Side registration motor 1 control signal
	11	SIDE REG F MOT 2A	O	DC0V/24V(pulse)	Side registration motor 1 control signal
	12	SIDE REG F MOT 1A	O	DC0V/24V(pulse)	Side registration motor 1 control signal
YC10	1	STP MOT OUT1	O	DC0V/24V(pulse)	Stapler motor control signal
	2	STP MOT OUT1	O	DC0V/24V(pulse)	Stapler motor control signal
	3	STP MOT OUT1	O	DC0V/24V(pulse)	Stapler motor control signal
	4	STP MOT OUT1	O	DC0V/24V(pulse)	Stapler motor control signal
	5	STP MOT OUT2	O	DC0V/24V(pulse)	Stapler motor control signal
	6	STP MOT OUT2	O	DC0V/24V(pulse)	Stapler motor control signal
	7	STP MOT OUT2	O	DC0V/24V(pulse)	Stapler motor control signal
	8	STP MOT OUT2	O	DC0V/24V(pulse)	Stapler motor control signal

Connector	Pin	Signal	I/O	Voltage	Description
	9	GND	-	-	Ground
	10	LS	I	DC0V/3.3V	Staple unit LS signal
	11	READY	I	DC0V/3.3V	Staple unit READY signal
	12	5V	O	DC5V	DC5V power output
	13	HP	I	DC0V/3.3V	Staple unit HP signal
YC11	1	TRY MOT OUT2	O	DC0V/24V(pulse)	Tray motor control signal
	2	TRY MOT OUT1	O	DC0V/24V(pulse)	Tray motor control signal
YC13	1	24V2	O	DC24V	DC24V power output
	2	PAP PRE SOL ACT	O	DC0V/24V	DFPPSOL: On/Off (actuate)
	3	PAP PRE SOL KEEP	O	DC0V/24V	DFPPSOL: On/Off (keep)
YC14	1	5V	O	DC5V	DC5V power output
	2	LED	O	DC0V/5V	Paper LED: On/Off
YC16	1	N.C.	-	-	Not used
	2	GND	-	-	Ground
	3	PAP SENS SIG	I	DC0V/3.3V	Exit paper sensor: On/Off
	4	3.3V	O	DC3.3V	DC3.3V power output
YC17	1	PADDLE SENS A	O	DC5V	DC5V power output
	2	GND	-	-	Ground
	3	PADDLE SENS SIG	I	DC0V/3.3V	Paddle sensor: On/Off
	4	GND	-	-	Ground
	5	ENTRY SENS SIG	I	DC0V/3.3V	Paper entry sensor: On/Off
	6	3.3V	O	DC3.3V	DC3.3V power output
YC19	A1	SID REG R SENS A	O	DC5V	DC5V power output to Side registration sensor 2
	A2	GND	-	-	Ground
	A3	SID REG R SENS SIG	I	DC0V/3.3V	DFSRS2: On/Off
	A4	SID REG F SENS A	O	DC5V	DC5V power output to Side registration sensor 1
	A5	GND	-	-	Ground
	A6	SID REG F SENS SIG	I	DC0V/3.3V	DFSRS1: On/Off
	A7	GND	-	-	Ground
	A8	PH ENTRY SENS SIG	I	DC0V/3.3V	PH paper entry sensor: On/Off
	A9	3.3V	O	DC3.3V	DC3.3V power output
	A10	MTRY FULL SENS A	O	DC5V	DC5V power output
	A11	GND	-	-	Ground
	A12	MTRY FULL SENS SIG	I	DC0V/3.3V	Tray sensor: On/Off
	A13	PADDLE SENS A	-	-	Not used
	A14	GND	-	-	Not used
	A15	PADDLE SENS SIG	-	-	Not used
	B1	BUNDLE SENS A	O	DC5V	DC5V power output
	B2	GND		-	Ground
	B3	BUNDLE SENS SIG	I	DC0V/3.3V	Bundle exit sensor: On/Off
	B4	PAP PRE UP SENS A	O	DC5V	DC5V power output
	B5	GND	-	-	Ground
	B6	PAP PRE UP SENS SIG	I	DC0V/3.3V	Paper pressing sensor 1: On/Off
	B7	PAP PRE LOW SENS A	O	DC5V	DC5V power output

Connector	Pin	Signal	I/O	Voltage	Description
	B8	GND	-	-	Ground
	B9	PAP PRE LOW SENS SIG	I	DC0V/3.3V	Paper pressing sensor 2: On/Off
	B10	ADJUST SENS A	O	DC5V	DC5V power output
	B11	GND	-	-	Ground
	B12	ADJUST SENS SIG	I	DC0V/3.3V	Adjustment sensor: On/Off
	B13	STP MOV SENS A	O	DC5V	DC5V power output
	B14	GND	-	-	Ground
	B15	STP MOV SENS SIG	I	DC0V/3.3V	Slide sensor: On/Off
YC20	1	SET SENS A	O	DC5V	DC5V power output
	2	GND	-	-	Ground
	3	SET SENS SIG	I	DC0V/3.3V	Device sensor: On/Off

(8)PH PWB (7100/7120/7130)

(8-1)Connector position

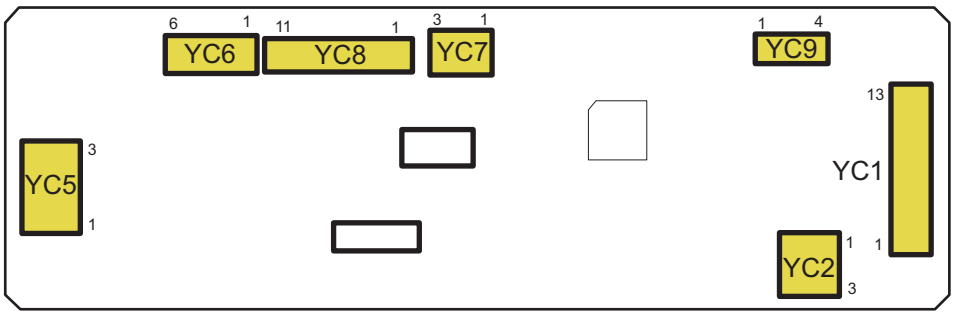

(8-2)Connector lists

Destination

- YC1: DF PWB
- YC2: DF PWB
- YC5: PH motor
- YC6: PH solenoid, PH tank solenoid
- YC7: PH paper entry sensor
- YC8: PH tank full sensor, PH tank set switch, PH pulse sensor, PH home position sensor
- YC9: PH tank full sensor

Connector	Pin	Signal	I/O	Voltage	Description
YC1	1	PH_SDI	I	DC0V/3.3V(pulse)	Serial communication data signal input
	2	PH_SDO	O	DC0V/3.3V(pulse)	Serial communication data signal output
	3	PH_CLK	I	DC0V/3.3V(pulse)	Clock signal
	4	PH_SEL	I	DC0V/3.3V	Select signal
	5	PH_RDY	O	DC0V/3.3V	Ready signal
	6	PHMOT_REQ	I	DC0V/3.3V	Motor: On/Off
	7	GND	-	-	Ground
	8	GND	-	-	Ground
	9	3.3V	I	DC3.3V	DC3.3V power input
	10	3.3V	I	DC3.3V	DC3.3V power input
	11	3.3V	I	DC3.3V	DC3.3V power input
	12	PH_EN_SENS	O	DC0V/3.3V	Paper entry sensor: On/Off
	13	GND	-	-	Ground
YC2	1	GND	-	-	Ground
	2	24V2	I	DC24V	DC24V power input
YC5	1	CCW	O	DC0V/24V(pulse)	Motor control signal (clockwise)
	2	NC	-	-	Not used
	3	CW	O	DC0V/24V(pulse)	Motor control signal (counterclockwise)
YC6	1	24V2	O	DC24V	DC24V power output
	2	PHSOL_PUL	O	DC0V/24V	Punch-hole switching solenoid (actuate)
	3	PHSOL_RET	O	DC0V/24V	Punch-hole switching solenoid (return)
	4	24V2	O	DC24V	DC24V power output
	5	TNKSOL_PUL	O	DC0V/24V	Tank solenoid (actuate)

Connector	Pin	Signal	I/O	Voltage	Description
	6	TNKSOL_HLD	O	DC0V/24V	Tank solenoid (keep)
YC7	1	GND	-	-	Ground
	2	PH EN SENS	I	DC0V/3.3V	Paper entry sensor: On/Off
	3	3.3V	O	DC3.3V	DC3.3V power output
YC8	1	3.3V	O	DC3.3V	DC3.3V power output
	2	TNK FULL PLS	O	DC0V/3.3V	Tank full sensor (photo transmitter): On/Off
	3	SENS 3.3V	O	DC3.3V	DC3.3V power output
	4	GND	-	-	Ground
	5	PHTNK_SET	I	DC0V/3.3V	PH dust tank sensor: On/Off
	6	SENS 3.3V	O	DC3.3V	DC3.3V power output
	7	GND	-	-	Ground
	8	PHMOT PLS	I	DC0V/3.3V	Pulse sensor: On/Off
	9	SENS 3.3V	O	DC3.3V	DC3.3V power output
	10	GND	-	-	Ground
	11	PHMOT HP	I	DC0V/3.3V	Home position sensor: On/Off
YC9	1	3.3V	O	DC3.3V	DC3.3V power output
	2	TNK FULL	I	DC0V/3.3V	Tank full sensor (photo receptor): On/Off
	3	GND	-	-	Ground
	4	TNK FULL PLS	I	DC0V/3.3V	Tank full sensor (photo receptor): On/Off

(9)BR PWB (AK-7110)

(9-1)PWB photograph

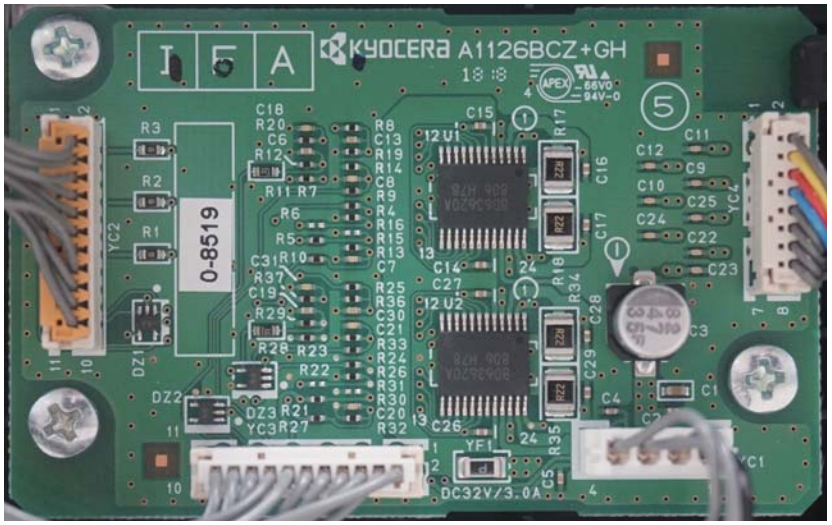

(9-2)Connector position

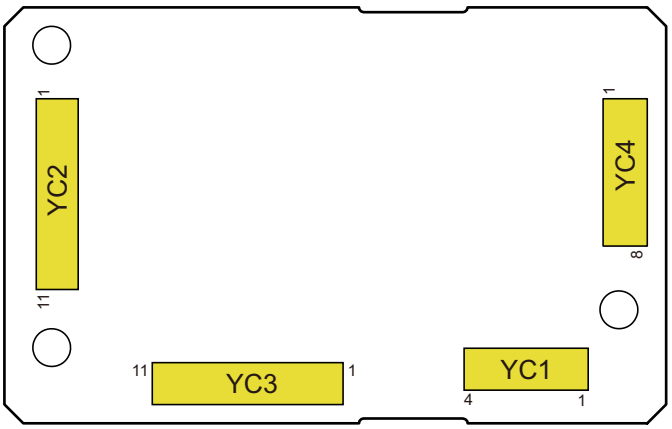

(9-3)Connector lists

Destination

- YC1: Image Drive PWB
- YC2: BR job separator sensor, BR conveying sensor 1, BR conveying sensor 2, BR cover sensor
- YC3: Image Drive PWB
- YC4: BR conveying motor 1, BR conveying motor 2

Connector	Pin	Signal	I/O	Voltage	Description
YC1	1	GND	-		Ground
	2	+24V2	-	DC24V	DC24V power input
	3	+3.3V2	-	DC3.3V	DC3.3V power input
	4	+3.3V3	-	DC3.3V	DC3.3V power input
YC2	1	+3.3V3	-	DC3.3V	DC3.3V power input
	2	GND	-		Ground
	3	JS_SENS_AK	I	DC0V/3.3V	Job separator tray sensor detection signal
	4	3.3V2	-	DC3.3V	DC3.3V power input
	5	GND	-		Ground
	6	BRG_JAM1	I	DC0V/3.3V	BR conveying sensor 1 detection signal
	7	3.3V2	-	DC3.3V	DC3.3V power input
	8	GND	-		Ground
	9	BRG_JAM2	I	DC0V/3.3V	BR conveying sensor 2 detection signal
	10	GND	-		Ground
	11	BRG_OPEN	I	DC0V/3.3V	BR cover OPEN detection signal
YC3	1	BRG_MOT_DIR	I	DC0V/3.3V	Conveying motor direction switching signal
	2	BRG_MOT2_CLK	I	DC0V/3.3V	Conveying motor 2 clock signal
	3	BRG_MOT2_PD	I	DC0V/3.3V	Conveying motor current control signal
	4	BRG_OPEN	O	DC0V/3.3V	BR cover OPEN detection signal
	5	BRG_FEED_SENS2	O	DC0V/3.3V	BR conveying sensor 2 detection signal
	6	BRG_FEED_SENS1	O	DC0V/3.3V	BR conveying sensor 1 detection signal
	7	BRG_SET	O	DC0V/3.3V	AK set detection signal
	8	BRG_MOT1_CLK	I	DC0V/3.3V	Conveying motor 1 clock signal
	9	BRG_MOT1_REM	I	DC0V/3.3V	Conveying motor remote signal
	10	BRG_MOT1_PD	I	DC0V/3.3V	Conveying motor 1 current control signal
	11	JS_SENS_AK	O	DC0V/3.3V	Job separator tray sensor detection signal
YC4	1	BRG_MOT1_1A	O	DC0V/24V	BR conveying motor 1 output signal A layer
	2	BRG_MOT1_1B	O	DC0V/24V	BR conveying motor 1 output signal A layer
	3	BRG_MOT1_2B	O	DC0V/24V	BR conveying motor 1 output signal B layer
	4	BRG_MOT1_2A	O	DC0V/24V	BR conveying motor 1 output signal B layer
	5	BRG_MOT2_1B	O	DC0V/24V	BR conveying motor 2 output signal B layer
	6	BRG_MOT2_1A	O	DC0V/24V	BR conveying motor 2 output signal B layer
	7	BRG_MOT2_2B	O	DC0V/24V	BR conveying motor 2 output signal A layer
	8	BRG_MOT2_2A	O	DC0V/24V	BR conveying motor 2 output signal A layer

(10)DF PWB (DF-7140)

(10-1)PWB photograph

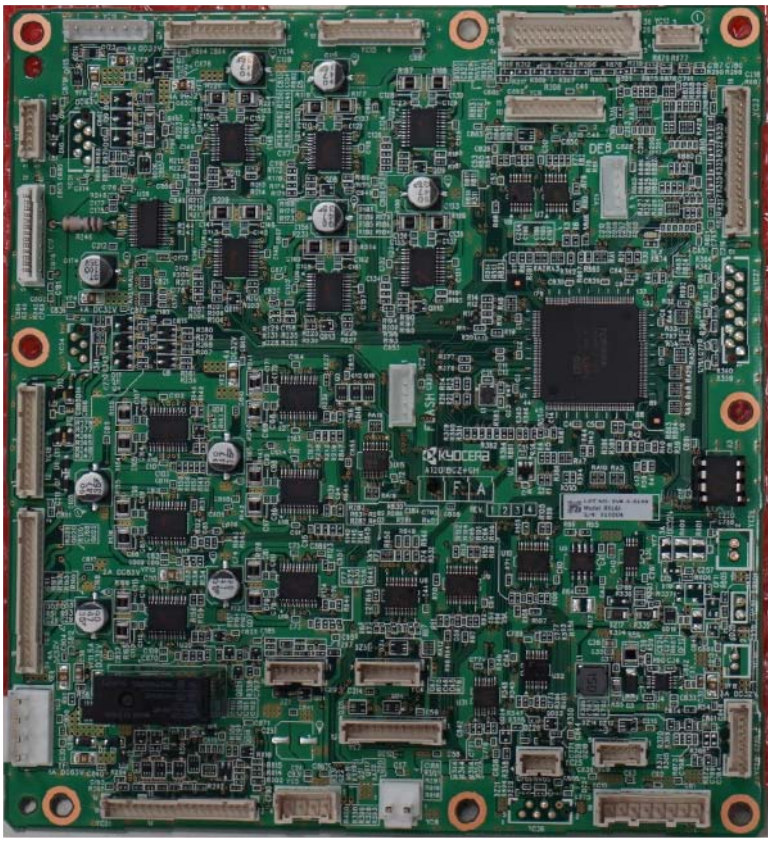

(10-2)Connector position

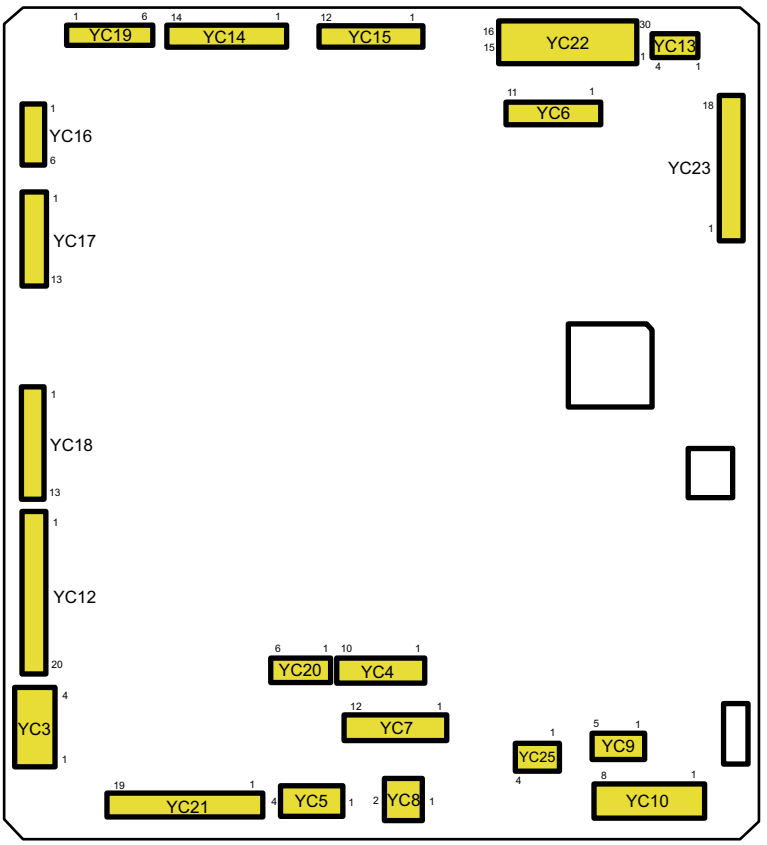

(10-3)Connector lists

Destination

- YC3: Exit cover switch, Front cover switch
- YC4: Image Drive PWB
- YC5: Image Drive PWB
- YC6: MT PWB
- YC7: PH PWB
- YC8: PH PWB
- YC9: BF PWB
- YC10: BF PWB
- YC12: Slide motor, Exit motor, Middle motor, Paper entry motor, Exit release motor
- YC13: Tray paper full sensor 2
- YC14: Shift release motor, Shift motor 1/2, Exit clutch
- YC15: Paddle motor, Side registration motor 1/2
- YC16: Exit fan
- YC17: Stapler
- YC18: Relief drum motor, Feedshift solenoid 1/2/3
- YC19: Tray motor
- YC20: Drum sensor, Middle sensor
- YC21: Sub exit sensor, Sub tray full sensor, Paper entry sensor, DF operation PWB, Tray paper full sensor 1
- YC22: Slide sensor, Side registration sensor 1/2, Exit paper sensor, Bundle exit sensor, Tray sensor 1/2, Paddle sensor, Adjustment sensor, Shift set sensor
- YC23: Shift sensor 1/2, Tray sensor 3/4/5, Shift release sensor
- YC25: ZF PWB

Connector	Pin	Signal	I/O	Voltage	Description
YC3	1	24V2	O	DC24V	DC24V power output
	2	EJECT COV SIG	I	DC0V/24V	Exit cover sensor: On/Off
	3	FRONT COV SOURCE	O	DC24V	DC24V power output
	4	FRONT COV SIG	I	DC0V/24V	Front cover sensor: On/Off
YC4	1	GND	-	-	Ground
	2	GND	-	-	Ground
	3	ENG RDY	O	DC0V/3.3V	Ready signal
	4	ENG SEL	I	DC0V/3.3V	Select signal
	5	ENG CLK	I	DC0V/3.3V(pulse)	Serial clock signal
	6	ENG SDI	I	DC0V/3.3V(pulse)	Serial communication data signal input
	7	ENG SDO	O	DC0V/3.3V(pulse)	Serial communication data signal output
YC5	1	GND	-	-	Ground
	2	GND	-	-	Ground
	3	24V2	I	DC24V	DC24V power input
	4	24V2	I	DC24V	DC24V power input
YC6	1	GND	-	-	Ground
	2	GND	-	-	Ground

Connector	Pin	Signal	I/O	Voltage	Description
	3	GND	-	-	Ground
	4	5V2	O	DC5V	DC5V power output
	5	24V2_F1	O	DC24V	DC24V power output
	6	24V2_F1	O	DC24V	DC24V power output
	7	MT DO	O	DC0V/5V(pulse)	Serial communication data signal output
	8	MT DI	I	DC0V/5V(pulse)	Serial communication data signal input
	9	MT CLK	O	DC0V/5V(pulse)	Serial clock signal
	10	MT SEL	O	DC0V/5V	Select signal
	11	MT RDY	I	DC0V/5V	Ready signal
YC7	1	5V2	O	DC5V	DC5V power output
	2	3.3V	O	DC3.3V	DC3.3V power output
	3	3.3V	O	DC3.3V	DC3.3V power output
	4	GND	-	-	Ground
	5	GND	-	-	Ground
	6	PHPES REM	I	DC0V/3.3V	PH paper edge sensor: On/Off
	7	PHMOT REM	O	DC0V/3.3V	PH motor: On/Off
	8	PU RDY	I	DC0V/3.3V	Ready signal
	9	PU SEL	O	DC0V/3.3V	Select signal
	10	PU CLK	O	DC0V/3.3V	Clock signal
	11	PU SDI	I	DC0V/3.3V	Serial communication data signal input
	12	PU SDO	O	DC0V/3.3V	Serial communication data signal output
YC8	1	GND	-	-	Ground
	2	24V2IL	O	DC24V	DC24V power output
YC9	1	BF DI	I	DC0V/3.3V	Serial communication data signal input
	2	BF DO	O	DC0V/3.3V	Serial communication data signal output
	3	BF CLK	O	DC0V/3.3V	Clock signal
	4	BF SEL	O	DC0V/3.3V	Select signal
	5	BF RDY	I	DC0V/3.3V	Ready signal
YC10	1	3.3V	O	DC3.3V	DC3.3V power output
	2	GND	-	-	Ground
	3	GND	-	-	Ground
	4	5V2	O	DC5V	DC5V power output
	5	GND	-	-	Ground
	6	GND	-	-	Ground
	7	24V2IL	O	DC24V	DC24V power output
	8	24V2IL	O	DC24V	DC24V power output
YC12	1	ST MOV MOT 2B	O	DC0V/24V(pulse)	Slide motor control signal
	2	ST MOV MOT 1B	O	DC0V/24V(pulse)	Slide motor control signal
	3	ST MOV MOT 2A	O	DC0V/24V(pulse)	Slide motor control signal
	4	ST MOV MOT 1A	O	DC0V/24V(pulse)	Slide motor control signal
	5	EJECT MOT 1B	O	DC0V/24V(pulse)	Exit motor control signal
	6	EJECT MOT 1A	O	DC0V/24V(pulse)	Exit motor control signal
	7	EJECT MOT 2A	O	DC0V/24V(pulse)	Exit motor control signal
	8	EJECT MOT 2B	O	DC0V/24V(pulse)	Exit motor control signal
	9	MIDDLE MOT 1B	O	DC0V/24V(pulse)	Middle motor control signal
	10	MIDDLE MOT 1A	O	DC0V/24V(pulse)	Middle motor control signal

Connector	Pin	Signal	I/O	Voltage	Description
	11	MIDDLE MOT 2A	O	DC0V/24V(pulse)	Middle motor control signal
	12	MIDDLE MOT 2B	O	DC0V/24V(pulse)	Middle motor control signal
	13	ENTRY MOT 2B	O	DC0V/24V(pulse)	Paper entry motor control signal
	14	ENTRY MOT 1B	O	DC0V/24V(pulse)	Paper entry motor control signal
	15	ENTRY MOT 2A	O	DC0V/24V(pulse)	Paper entry motor control signal
	16	ENTRY MOT 1A	O	DC0V/24V(pulse)	Paper entry motor control signal
	17	EJE RELS MOT 2B	O	DC0V/24V(pulse)	Exit release motor control signal
	18	EJE RELS MOT 1B	O	DC0V/24V(pulse)	Exit release motor control signal
	19	EJE RELS MOT 2A	O	DC0V/24V(pulse)	Exit release motor control signal
	20	EJE RELS MOT 1A	O	DC0V/24V(pulse)	Exit release motor control signal
YC13	1	MTRY U SENS K	I	DC0V/3.3V	Tray paper full sensor 1_LED: On/Off
	2	GND	-	-	Ground
	3	MTRY U SENS SIG	I	DC0V/3.3V	Tray paper full sensor 2: On/Off
	4	3.3V	O	DC3.3V	DC3.3V power output
YC14	1	SFT RELS MOT 2B	O	DC0V/24V(pulse)	Shift release motor control signal
	2	SFT RELS MOT 1B	O	DC0V/24V(pulse)	Shift release motor control signal
	3	SFT RELS MOT 2A	O	DC0V/24V(pulse)	Shift release motor control signal
	4	SFT RELS MOT 1A	O	DC0V/24V(pulse)	Shift release motor control signal
	5	SFT R MOT 2B	O	DC0V/24V(pulse)	Shift motor 2 control signal
	6	SFT R MOT 1B	O	DC0V/24V(pulse)	Shift motor 2 control signal
	7	SFT R MOT 2A	O	DC0V/24V(pulse)	Shift motor 2 control signal
	8	SFT R MOT 1A	O	DC0V/24V(pulse)	Shift motor 2 control signal
	9	SFT F MOT 2B	O	DC0V/24V(pulse)	Shift motor 1 control signal
	10	SFT F MOT 1B	O	DC0V/24V(pulse)	Shift motor 1 control signal
	11	SFT F MOT 2A	O	DC0V/24V(pulse)	Shift motor 1 control signal
	12	SFT F MOT 1A	O	DC0V/24V(pulse)	Shift motor 1 control signal
	13	EXTCL_EN	O	DC0V/24V	Exit clutch: On/Off
	14	24V2IL_F5	O	DC24V	DC24V power output
YC15	1	PADDLE MOT 2B	O	DC0V/24V(pulse)	Paddle motor control signal
	2	PADDLE MOT 1B	O	DC0V/24V(pulse)	Paddle motor control signal
	3	PADDLE MOT 2A	O	DC0V/24V(pulse)	Paddle motor control signal
	4	PADDLE MOT 1A	O	DC0V/24V(pulse)	Paddle motor control signal
	5	SIDE REG R MOT 2B	O	DC0V/24V(pulse)	Side registration motor 2 control signal
	6	SIDE REG R MOT 1B	O	DC0V/24V(pulse)	Side registration motor 2 control signal
	7	SIDE REG R MOT 2A	O	DC0V/24V(pulse)	Side registration motor 2 control signal
	8	SIDE REG R MOT 1A	O	DC0V/24V(pulse)	Side registration motor 2 control signal
	9	SIDE REG F MOT 2B	O	DC0V/24V(pulse)	Side registration motor 1 control signal
	10	SIDE REG F MOT 1B	O	DC0V/24V(pulse)	Side registration motor 1 control signal
	11	SIDE REG F MOT 2A	O	DC0V/24V(pulse)	Side registration motor 1 control signal
	12	SIDE REG F MOT 1A	O	DC0V/24V(pulse)	Side registration motor 1 control signal
YC16	1	GND	-	-	Ground
	2	EJECT FAN MOT_SIDE	O	DC0V/24V	Exit fan 1: On/Off
	3	GND	-	-	Ground
	4	EJECT FAN MOT_SIDE	O	DC0V/24V	Exit fan 2: On/Off
	5	GND	-	-	Ground
	6	EJECT FAN MOT_CENT	O	DC0V/24V	Exit fan 3: On/Off

Connector	Pin	Signal	I/O	Voltage	Description
YC17	1	STP_HP	I	DC0V/3.3V	Staple unit HP signal
	2	+5V2	O	DC5V	DC5V power output
	3	STP_RDY	I	DC0V/3.3V	Staple unit READY signal
	4	STP_LS	I	DC0V/3.3V	Staple unit LS signal
	5	GND	-	-	Ground
	6	STMOT-	O	DC0V/24V	Stapler control signal
	7	STMOT-	O	DC0V/24V	Stapler control signal
	8	STMOT-	O	DC0V/24V	Stapler control signal
	9	STMOT-	O	DC0V/24V	Stapler control signal
	10	STMOT+	O	DC0V/24V	Stapler control signal
	11	STMOT+	O	DC0V/24V	Stapler control signal
	12	STMOT+	O	DC0V/24V	Stapler control signal
	13	STMOT+	O	DC0V/24V	Stapler control signal
YC18	1	DRM MOT 2B	O	DC0V/24V(pulse)	Relief drum motor control signal
	2	DRM MOT 1B	O	DC0V/24V(pulse)	Relief drum motor control signal
	3	DRM MOT 2A	O	DC0V/24V(pulse)	Relief drum motor control signal
	4	DRM MOT 1A	O	DC0V/24V(pulse)	Relief drum motor control signal
	5	24V2	O	DC24V	DC24V power output
	6	MID_DRM SOL ACT	O	DC0V/24V	Feedshift solenoid 1 (actuate): On/Off
	7	MID_DRM SOL KEEP	O	DC0V/24V	Feedshift solenoid 1 (keep): On/Off
	8	24V2	O	DC24V	DC24V power output
	9	DRM_BF SOL ACT	O	DC0V/24V	Feedshift solenoid 2 (actuate): On/Off
	10	DRM_BF SOL KEEP	O	DC0V/24V	Feedshift solenoid 2 (keep): On/Off
	11	24V2	O	DC24V	DC24V power output
	12	SUB_MID SOL ACT	O	DC0V/24V	Feedshift solenoid 3 (actuate): On/Off
	13	SUB_MID SOL KEEP	O	DC0V/24V	Feedshift solenoid 3 (keep): On/Off
YC19	1	TRAYMOT_BRK	O	DC0V/5V	Tray motor control signal
	2	TRAYMOT_DIR	O	DC0V/5V	Tray motor control signal
	3	TRAYMOT_CLK	O	DC0V/5V	Clock signal
	4	TRAYMOT_EN	O	DC0V/5V	Tray motor control signal
	5	GND	-	-	Ground
	6	+24V2IL_F4	O	DC24V	DC24V power output
YC20	1	DRM SENS A	O	DC5V	DC5V power output
	2	GND	-	-	Ground
	3	DRM SENS SIG	I	DC0V/3.3V	Drum sensor: On/Off
	4	MID EJE SENS A	O	DC5V	DC5V power output
	5	GND	-	-	Ground
	6	MID EJE SENS SIG	I	DC0V/3.3V	Middle sensor: On/Off
YC21	1	STRY EJE SENS A	O	DC5V	DC5V power output
	2	GND	-	-	Ground
	3	STRY EJE SENS SIG	I	DC0V/3.3V	Sub exit sensor: On/Off
	4	3.3V	O	DC3.3V	DC3.3V power output
	5	GND	-	-	Ground
	6	STRY FULL SENS SIG	I	DC0V/3.3V	Sub tray full sensor: On/Off
	7	STRY FULL SENS PLS	O	DC0V/3.3V(pulse)	Pulse signal
	8	GND	-	-	Ground

Connector	Pin	Signal	I/O	Voltage	Description
	9	ENTRY SENS SIG	I	DC0V/3.3V	Paper entry sensor: On/Off
	10	3.3V	O	DC3.3V	DC3.3V power output
	11	LED1	O	DC0V/5V	LED output
	12	LED2	O	DC0V/5V	LED output
	13	LED3	O	DC0V/5V	LED output
	14	LED4	O	DC0V/5V	LED output
	15	KEY1	I	DC0V/3.3V	Key input
	16	KEY2	I	DC0V/3.3V	Key input
	17	GND	-	-	Ground
	18	3.3V	O	DC3.3V	DC3.3V power output
	19	MTRY U SENS K	O	DC0V/3.3V	Tray paper full sensor 1: On/Off
YC22	1	STAPLE SENS A	O	DC5V	DC5V power output
	2	GND	-	-	Ground
	3	STAPLE SENS SIG	I	DC0V/3.3V	Slide sensor: On/Off
	4	SID REG R SENS A	O	DC5V	DC5V power output
	5	GND	-	-	Ground
	6	SID REG R SENS SIG	I	DC0V/3.3V	Side registration sensor 2: On/Off
	7	SID REG F SENS A	O	DC5V	DC5V power output
	8	GND	-	-	Ground
	9	SID REG F SENS SIG	I	DC0V/3.3V	Side registration sensor 1: On/Off
	10	GND	-	-	Ground
	11	PAP SENS SIG	I	DC0V/3.3V	Exit paper sensor: On/Off
	12	3.3V	O	DC3.3V	DC3.3V power output
	13	BUNDLE SENS A	O	DC5V	DC5V power output
	14	GND	-	-	Ground
	15	BUNDLE SENS SIG	I	DC0V/3.3V	Bundle exit sensor: On/Off
	16	MTRY HP1 SENS A	O	DC5V	DC5V power output
	17	GND	-	-	Ground
	18	MTRY HP1 SENS SIG	I	DC0V/3.3V	tray sensor 1 On/Off
	19	MTRY HP2 SENS A	O	DC5V	DC5V power output
	20	GND	-	-	Ground
	21	MTRY HP2 SENS SIG	I	DC0V/3.3V	tray sensor 2: On/Off
	22	PADDLE SENS A	O	DC5V	DC5V power output
	23	GND	-	-	Ground
	24	PADDLE SENS SIG	I	DC0V/3.3V	Paddle sensor: On/Off
	25	ADJUST SENS A	O	DC5V	DC5V power output
	26	GND	-	-	Ground
	27	ADJUST SENS SIG	I	DC0V/3.3V	Adjustment sensor: On/Off
	28	SFT SET SENS A	O	DC5V	DC5V power output
	29	GND	-	-	Ground
	30	SFT SET SENS SIG	I	DC0V/3.3V	Shift set sensor: On/Off
YC23	1	SFT F HP SENS A	O	DC5V	DC5V power output
	2	GND	-	-	Ground
	3	SFT F HP SENS SIG	I	DC0V/3.3V	Shift sensor 1: On/Off On/Off
	4	SFT R HP SENS A	O	DC5V	DC5V power output
	5	GND	-	-	Ground

Connector	Pin	Signal	I/O	Voltage	Description
	6	SFT R HP SENS SIG	I	DC0V/3.3V	Shift sensor 2: On/Off On/Off
	7	MTRY HALF SENS A	O	DC5V	DC5V power output
	8	GND	-	-	Ground
	9	MTRY HALF SENS SIG	I	DC0V/3.3V	tray sensor 3 On/Off
	10	MTRY BF SENS A	O	DC5V	DC5V power output
	11	GND	-	-	Ground
	12	MTRY BF SENS SIG	I	DC0V/3.3V	tray sensor 5 On/Off
	13	MTRY FULL SENS A	O	DC5V	DC5V power output
	14	GND	-	-	Ground
	15	MTRY FULL SENS SIG	I	DC0V/3.3V	tray sensor 4 On/Off
	16	SFT RELS SENS A	O	DC5V	DC5V power output
	17	GND	-	-	Ground
	18	SFT RELS SENS SIG	I	DC0V/3.3V	Shift release sensor: On/Off
YC25	1	SLAVE_TXD	O	DC0V/5V	UART communication output
	2	SLAVE_RXD	I	DC0V/3.3V	UART communication input
	3	GND	-	-	Ground
	4	+5VIF	I	DC5V	DC 5V power input

(11)MT PWB (MT-730(B))

(11-1)PWB photograph



(11-2)Connector position

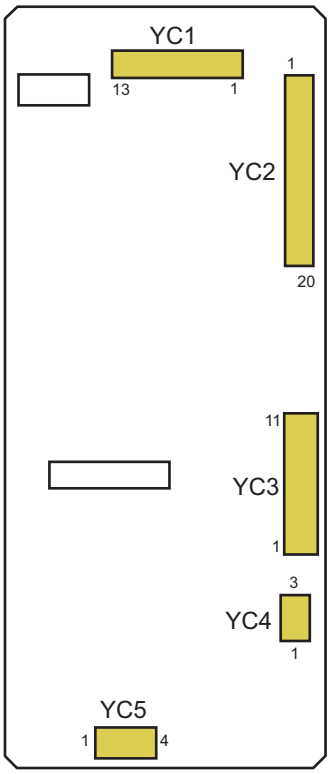

(11-3)Connector lists

Destination

- YC1: MT tray sensor 1/2/3, MT tray exit sensor 2
- YC2: MT tray sensor 4/5/6/7, MT tray exit sensor 1, MT home position sensor
- YC3: DF main PWB
- YC4: MT cover sensor
- YC5: MT conveying motor

Connector	Pin	Signal	I/O	Voltage	Description
YC1	1	GND	-	-	Ground
	2	OFS1	I	DC0V/5V	MT tray sensor 1: On/Off
	3	5V	O	DC5V	DC5V power output
	4	GND	-	-	Ground
	5	OFS2	I	DC0V/5V	MT tray sensor 2: On/Off
	6	5V	O	DC5V	DC5V power output
	7	GND	-	-	Ground
	8	OFS3	I	DC0V/5V	MT tray sensor 3: On/Off
	9	5V	O	DC5V	DC5V power output
	10	LED	O	DC0V/5V	LED signal
	11	GND	-	-	Ground
	12	TEJS	I	DC0V/5V(pulse)	MB tray exit sensor 2: On/Off (photo receptor)
	13	5V	O	DC5V	DC5V power output
YC2	1	GND	-	-	Ground
	2	OFS4	I	DC0V/5V	MT tray sensor 4: On/Off
	3	5V	O	DC5V	DC5V power output
	4	GND	-	-	Ground
	5	OFS5	I	DC0V/5V	MT tray sensor 5: On/Off
	6	5V	O	DC5V	DC5V power output
	7	GND	-	-	Ground
	8	OFS6	I	DC0V/5V	MT tray sensor 6: On/Off
	9	5V	O	DC5V	DC5V power output
	10	GND	-	-	Ground
	11	OFS7	I	DC0V/5V	MT tray sensor 7: On/Off
	12	5V	O	DC5V	DC5V power output
	13	5V	O	DC5V	DC5V power output
	14	LED	O	DC0V/5V(pulse)	MT tray exit sensor 1: Off/On (light emission)
	15	GND	-	-	Ground
	16	HP SIG	I	DC0V/5V	MT home position sensor: On/Off
	17	5V	O	DC5V	DC5V power output
	18	GND	-	-	Ground
	19	NC	-	-	Not used
	20	5V	O	DC5V	DC5V power output
YC3	1	GND	-	-	Ground
	2	GND	-	-	Ground

Connector	Pin	Signal	I/O	Voltage	Description
	3	GND	-	-	Ground
	4	5V	I	DC5V	DC5V power input
	5	24V	I	DC24V	DC24V power input
	6	24V	I	DC24V	DC24V power input
	7	SDI	I	DC0V/5V(pulse)	MT serial communication data signal
	8	SDO	O	DC0V/5V(pulse)	MT serial communication data signal
	9	SCLK	I	DC0V/5V(pulse)	MT clock signal
	10	SEL	I	DC0V/5V	MT select signal
	11	READY	O	DC0V/5V	MT ready signal
YC4	1	R24V	I	DC24V	DC24V power input
	3	24V	O	DC24V	DC24V power output
YC5	1	MOTOR_A	O	DC0V/24V(pulse)	MT conveying motor control signal
	2	MOTORA	O	DC0V/24V(pulse)	MT conveying motor control signal
	3	MOTORB	O	DC0V/24V(pulse)	MT conveying motor control signal
	4	MOTOR_B	O	DC0V/24V(pulse)	MT conveying motor control signal

(12)BF PWB (BF-730)

(12-1)PWB photograph

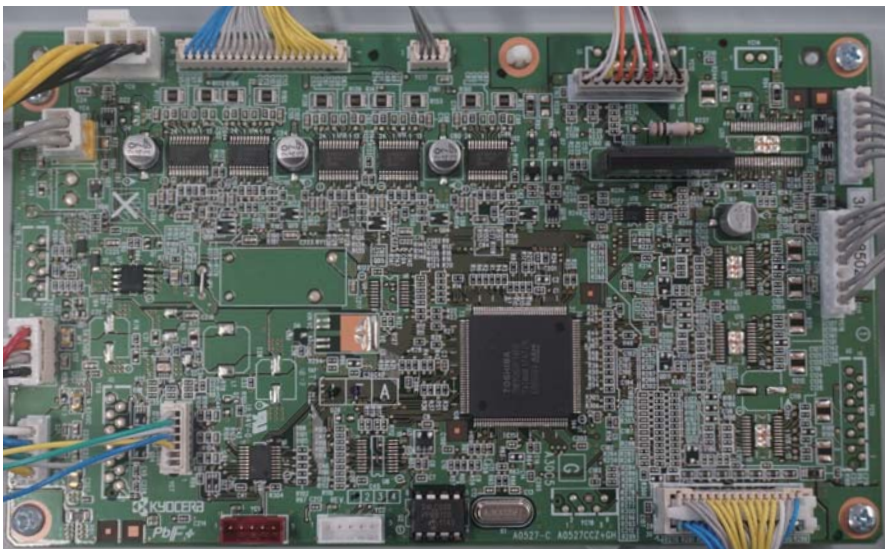

(12-2)Connector position

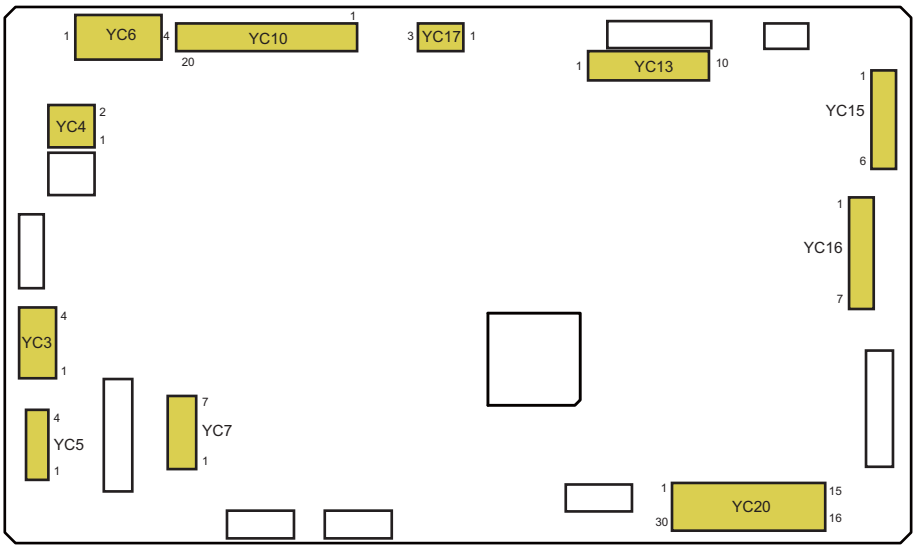

(12-3)Connector lists

Destination

- YC3: Main PWB
- YC4: Left cover sensor
- YC5: Main PWB
- YC6: BF set sensor, BF tray open/close sensor
- YC7: Main PWB
- YC10: Adjustment motor 1/2, Side registration motor 1/2, Paper entry motor
- YC13: Staple motor
- YC15: Blade motor
- YC16: Main motor
- YC17: Feedshift solenoid
- YC20: Adjustment sensor 1/2, Side registration sensor 1/2, Tray full sensor, Exit sensor, Conveying sensor, Paper sensor, Blade sensor, Paper entry sensor

Connector	Pin	Signal	I/O	Voltage	Description
YC3	1	GND	-	-	Ground
	2	GND	-	-	Ground
	3	24V	I	DC24V	DC24V power input
	4	24V	I	DC24V	DC24V power input
YC4	1	24V1	I	DC24V	DC24V power input
	2	FRONT COV SIG	I	DC0V/24V	Left cover sensor: On/Off
YC5	1	3.3V	I	DC3.3V	DC3.3V power input
	2	GND	-	-	Ground
	3	GND	-	-	Ground
	4	5V	I	DC5V	DC5V power input
YC6	1	24V	O	DC24V	DC24V power output
	2	FRONT COV SIG	I	DC0V/24V	BF set sensor: On/Off
	3	24V	O	DC24V	DC24V power output
	4	EJECT COV SIG	I	DC0V/24V	Tray open/close sensor: On/Off
YC7	1	GND	-	-	Ground
	2	GND	-	-	Ground
	3	ENG_RDY	O	DC0V/3.3V	Ready signal
	4	ENG_SEL	I	DC0V/3.3V	Select signal
	5	ENG_CLK	I	DC0V/3.3V	Clock signal
	6	ENG_DI	I	DC0V/3.3V	Serial communication data signal input
	7	ENG_DO	O	DC0V/3.3V	Serial communication data signal output
YC10	1	EXTMOT_2B	O	DC0V/24V(pulse)	Adjustment motor 2 control signal
	2	EXTMOT_1B	O	DC0V/24V(pulse)	Adjustment motor 2 control signal
	3	EXTMOT_2A	O	DC0V/24V(pulse)	Adjustment motor 2 control signal
	4	EXTMOT_1A	O	DC0V/24V(pulse)	Adjustment motor 2 control signal
	5	MDLMOT_2B	O	DC0V/24V(pulse)	Side registration motor 2 control signal
	6	MDLMOT_1B	O	DC0V/24V(pulse)	Side registration motor 2 control signal
	7	MDLMOT_2A	O	DC0V/24V(pulse)	Side registration motor 2 control signal

Connector	Pin	Signal	I/O	Voltage	Description
	8	MDLMOT_1A	O	DC0V/24V(pulse)	Side registration motor 2 control signal
	9	CINMOT_2B	O	DC0V/24V(pulse)	Paper entry motor control signal
	10	CINMOT_1B	O	DC0V/24V(pulse)	Paper entry motor control signal
	11	CINMOT_2A	O	DC0V/24V(pulse)	Paper entry motor control signal
	12	CINMOT_1A	O	DC0V/24V(pulse)	Paper entry motor control signal
	13	EXCMOT_2B	O	DC0V/24V(pulse)	Adjustment motor 1 control signal
	14	EXCMOT_1B	O	DC0V/24V(pulse)	Adjustment motor 1 control signal
	15	EXCMOT_2A	O	DC0V/24V(pulse)	Adjustment motor 1 control signal
	16	EXCMOT_1A	O	DC0V/24V(pulse)	Adjustment motor 1 control signal
	17	STMMOT_2B	O	DC0V/24V(pulse)	Side registration motor 1 control signal
	18	STMMOT_1B	O	DC0V/24V(pulse)	Side registration motor 1 control signal
	19	STMMOT_2A	O	DC0V/24V(pulse)	Side registration motor 1 control signal
	20	STMMOT_1A	O	DC0V/24V(pulse)	Side registration motor 1 control signal
YC13	1	5V	O	DC5V	DC5V power output
	2	STLS2	I	DC0V/5V	Staple unit LS2 signal
	3	GND	-	-	Ground
	4	STLS1	I	DC0V/5V	Staple unit LS1 signal
	5	STHP	I	DC0V/5V	Staple unit HP signal
	6	STMOT_OUT1	O	DC0V/24V(pulse)	Stapler motor control signal
	7	STMOT_OUT1	O	DC0V/24V(pulse)	Stapler motor control signal
	8	FGND	-	-	Ground
	9	STMOT_OUT2	O	DC0V/24V(pulse)	Stapler motor control signal
	10	STMOT_OUT2	O	DC0V/24V(pulse)	Stapler motor control signal
YC15	1	FLDMOT_BRK	O	DC0V/5V(pulse)	Blade motor control signal
	2	FLDMOT_DIR	O	DC0V/5V(pulse)	Blade motor control signal
	3	FLDMOT_CLK	O	DC0V/5V(pulse)	Blade motor control signal
	4	FLDMOT_EN	O	DC0V/5V(pulse)	Blade motor control signal
	5	GND	-	-	Ground
	6	24V2	O	DC24V	DC24V power output
YC16	1	FLDMOT_DIR	O	DC0V/5V(pulse)	Main motor control signal
	2	FLDMOT_ALM	O	DC0V/5V(pulse)	Main motor control signal
	3	FLDMOT_CLK	O	DC0V/5V(pulse)	Main motor control signal
	4	FLDMOT_EN	O	DC0V/5V(pulse)	Main motor control signal
	5	N.C.	-	-	Not used
	6	GND	-	-	Ground
	7	24V2	O	DC24V	DC24V power output
YC17	1	24V2	O	DC24V	DC24V power output
	2	3FSOL_ATT	O	DC24V	Feedshift solenoid: On/Off (actuate)
	3	3FSOL_HLD	O	DC24V	Feedshift solenoid: On/Off (return)
YC20	1	5V	O	DC5V	DC5V power output
	2	GND	-	-	Ground
	3	BDLFT_HP	I	DC0V/3.3V	Adjustment sensor 1: On/Off
	4	5V	O	DC5V	DC5V power output
	5	GND	-	-	Ground
	6	WDL_HP	I	DC0V/3.3V	Side registration sensor 1: On/Off
	7	5V	O	DC5V	DC5V power output

Connector	Pin	Signal	I/O	Voltage	Description
	8	GND	-	-	Ground
	9	FULL	I	DC0V/3.3V	Tray full sensor: On/Off
	10	5V	O	DC5V	DC5V power output
	11	GND	-	-	Ground
	12	OUT	I	DC0V/3.3V	Exit sensor: On/Off
	13	5V	O	DC5V	DC5V power output
	14	GND	-	-	Ground
	15	TRANSPORT	I	DC0V/3.3V	Conveying sensor: On/Off
	16	5V	O	DC5V	DC5V power output
	17	GND	-	-	Ground
	18	PAPER	I	DC0V/3.3V	Paper sensor: On/Off
	19	5V	O	DC5V	DC5V power output
	20	GND	-	-	Ground
	21	WDU_HP	I	DC0V/3.3V	Side registration sensor 2: On/Off
	22	5V	O	DC5V	DC5V power output
	23	GND	-	-	Ground
	24	BLD_HP	I	DC0V/3.3V	Blade sensor: On/Off
	25	GND	-	-	Ground
	26	BULOW_HP	I	DC0V/3.3V	Adjustment sensor 2: On/Off
	27	3.3V	O	DC3.3V	DC3.3V power output
	28	GND	-	-	Ground
	29	CARRY_IN	I	DC0V/3.3V	Paper entry sensor: On/Off
	30	3.3V	O	DC3.3V	DC3.3V power output

(13)PH PWB (PH-7)

(13-1)PWB photograph

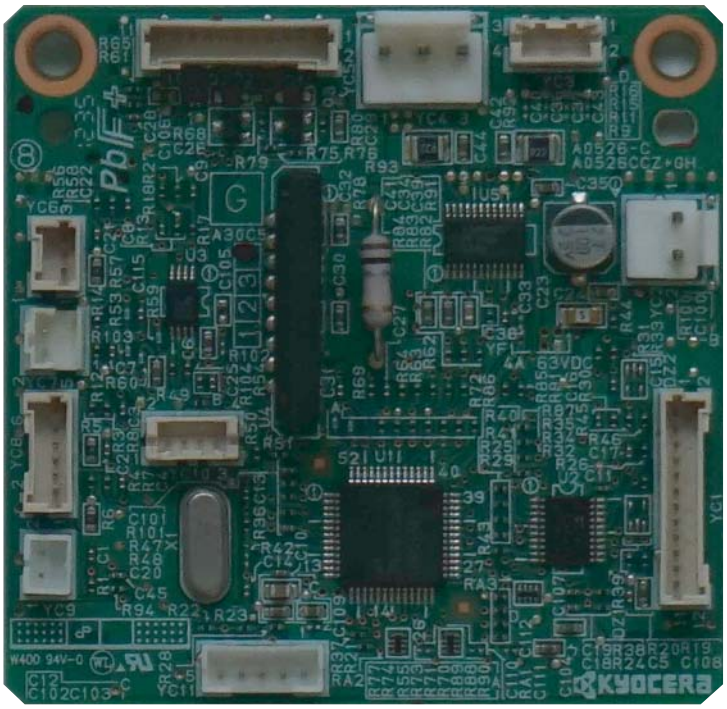

(13-2)Connector position

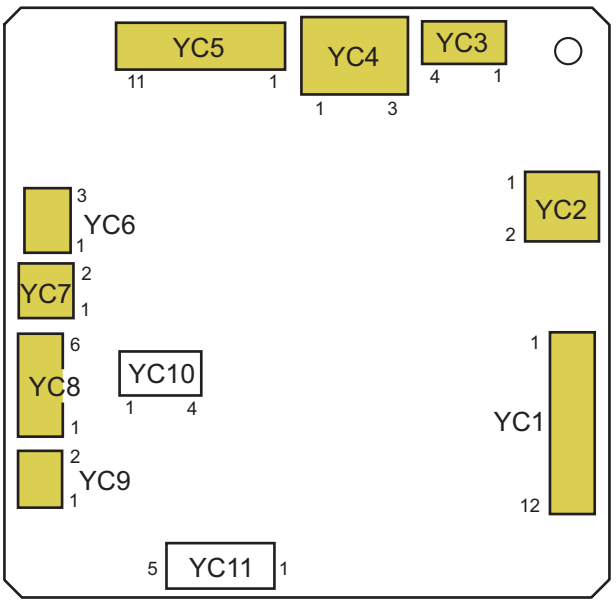

(13-3)Connector lists

Destination

- YC1: DF PWB
- YC2: DF PWB
- YC3: Slide motor
- YC4: Motor
- YC5: Solenoid, paper edge sensor 1, Tank full sensor
- YC6: Slide sensor
- YC7: Paper edge sensor 2
- YC8: Pulse sensor, Home position sensor
- YC9: Dust tank sensor

Connector	Pin	Signal	I/O	Voltage	Description
YC1	1	PH_SDI	I	DC0V/3.3V(pulse)	Serial communication data signal input
	2	PH_SDO	O	DC0V/3.3V(pulse)	Serial communication data signal output
	3	PH_CLK	I	DC0V/3.3V(pulse)	Clock signal
	4	PH_SEL	I	DC0V/3.3V	Select signal
	5	PH_RDY	O	DC0V/3.3V	Ready signal
	6	PHMOT_REQ	I	DC0V/3.3V	PH motor: On/Off
	7	PHPES_REQ	I	DC0V/3.3V	Paper edge detection: On/Off
	8	GND	-	-	Ground
	9	GND	-	-	Ground
	10	3.3V	I	DC3.3V	DC3.3V power input
	11	3.3V	I	DC3.3V	DC3.3V power input
	12	5.0V	I	DC5V	DC5V power input
YC2	1	GND	-	-	Ground
	2	24V2	I	DC24V	DC24V power input
YC3	1	PHADJ_MOT 2B	O	DC0V/24V(pulse)	Slide motor control signal
	2	PHADJ_MOT 1B	O	DC0V/24V(pulse)	Slide motor control signal
	3	PHADJ_MOT 2A	O	DC0V/24V(pulse)	Slide motor control signal
	4	PHADJ_MOT 1A	O	DC0V/24V(pulse)	Slide motor control signal
YC4	1	PHMOT_N	O	DC0V/24V(pulse)	Motor control signal
	2	NC	-	-	Not used
	3	PHMOT_P	O	DC0V/24V(pulse)	Motor control signal
YC5	1	24V2	O	DC24V	DC24V power output
	2	PHSOL_PUL	O	DC0V/24V	Solenoid: On/Off (actuate)
	3	PHSOL_RET	O	DC0V/24V	Solenoid: On/Off (return)
	4	PHLED_A	O	DC0V/3.3V	Paper edge sensor 1 A: On/Off
	5	PHLED_B	O	DC0V/3.3V	Paper edge sensor 1 B: On/Off
	6	PHLED_C	O	DC0V/3.3V	Paper edge sensor 1 C: On/Off
	7	PHLED_D	O	DC0V/3.3V	Paper edge sensor 1 D: On/Off
	8	PHLED_3.3V	O	DC3.3V	DC3.3V power output
	9	5.0V	O	DC5V	DC5V power output
	10	PHTNK_FUL	I	DC0V/5V	Tank full sensor: On/Off
	11	GND	-	-	Ground

Connector	Pin	Signal	I/O	Voltage	Description
YC6	1	SENS3.3V	O	DC3.3V	DC3.3V power output
	2	GND	-	-	Ground
	3	PHADJ_HP	I	DC0V/3.3V	Slide sensor: On/Off
YC7	1	PHPES_DET	I	DC0V/3.3V	Paper edge sensor 2: On/Off
	2	GND	-	-	Ground
YC8	1	SENS3.3V	O	DC3.3V	DC3.3V power output
	2	GND	-	-	Ground
	3	PHMOT_PLS	I	DC0V/3.3V	Pulse sensor: On/Off
	4	SENS3.3V	O	DC3.3V	DC3.3V power output
	5	GND	-	-	Ground
	6	PHMOT_HP	I	DC0V/3.3V	Home position sensor: On/Off
YC9	1	PHTNK_SET	I	DC0V/3.3V	Tank set sensor: On/Off
	2	GND	-	-	Ground

(14)DF PWB (DF-7120)

(14-1)PWB photograph

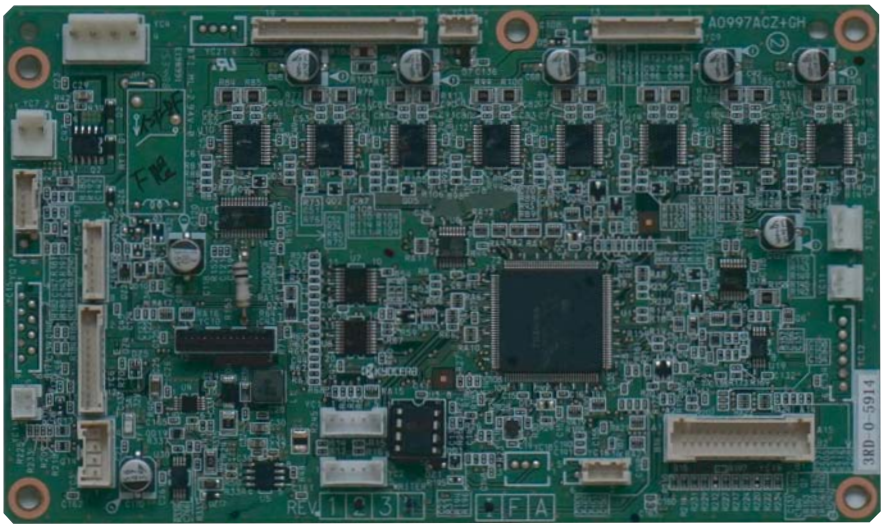

(14-2)Connector position

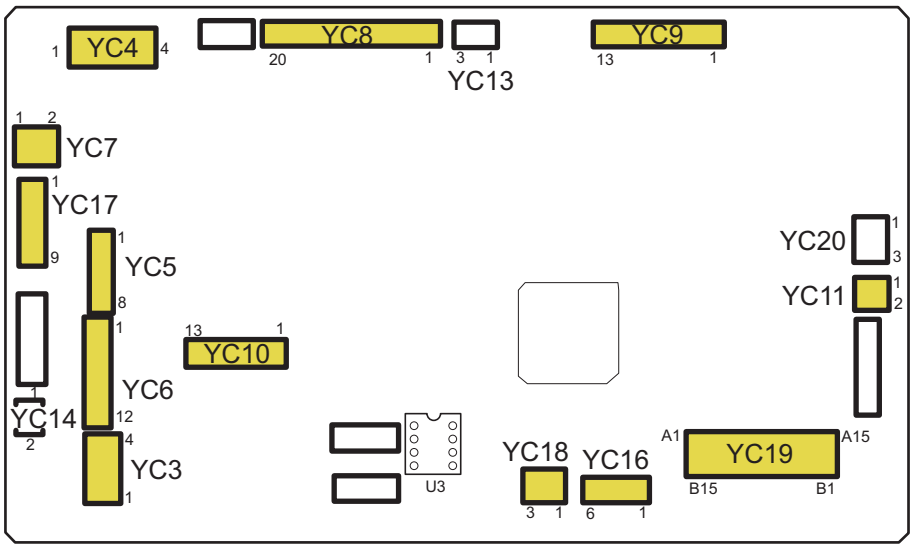

(14-3)Connector lists

Destination

- YC3: Image Drive PWB
- YC4: Front cover sensor, Top cover sensor
- YC5: Image Drive PWB
- YC6: PH PWB
- YC7: PH PWB
- YV8: Exit motor, Slide motor, Exit release motor, Paper entry motor, Middle motor
- YC9: Paddle motor, Side registration motor 1/2
- YC10: Stapler
- YC11: Tray motor
- YC16: Tray paper full sensor 1/2
- YC17: Paper entry sensor
- YC18: Middle sensor
- YC19: Side registration sensor 1/2, Exit paper sensor, Bundle exit sensor, Paddle sensor, Tray sensor 1/2/3, Adjustment sensor, Slide sensor

Connector	Pin	Signal	I/O	Voltage	Description
YC3	1	GND	-	-	Ground
	2	GND	-	-	Ground
	3	24V1	I	DC24V	DC24V power input
	4	24V1	I	DC24V	DC24V power input
YC4	1	24V1	O	DC24V	DC24V power output
	2	FRONT COV SIG	I	DC0V/24V	Front cover sensor: On/Off
	3	TOP COV SOURCE	O	DC24V	DC24V power output
	4	TOP COV SIG	I	DC0V/24V	Top cover sensor: On/Off
YC5	1	ENG RDY	O	DC0V/3.3V	Ready signal
	2	ENG SEL	I	DC0V/3.3V	Select signal
	3	ENG DI	I	DC0V/3.3V(pulse)	Serial communication data signal input
	4	ENG DO	O	DC0V/3.3V(pulse)	Serial communication data signal output
	5	ENG PAU	-	-	Not used
	6	DET	-	-	Ground
	7	ENG CLK	I	DC0V/3.3V(pulse)	Serial clock signal
	8	GND	-	-	Ground
YC6	1	5V	O	DC5V	DC5V power output
	2	3.3V	O	DC3.3V	DC3.3V power output
	3	3.3V	O	DC3.3V	DC3.3V power output
	4	GND	-	-	Ground
	5	GND	-	-	Ground
	6	PHPES REM	O	DC0V/3.3V	PH paper edge sensor: On/Off
	7	PHMOT REM	O	DC0V/3.3V	PH motor: On/Off
	8	PU RDY	I	DC0V/3.3V	Ready signal
	9	PU SEL	O	DC0V/3.3V	Select signal
	10	PU CLK	O	DC0V/3.3V	Clock signal

Connector	Pin	Signal	I/O	Voltage	Description
	11	PU DI	I	DC0V/3.3V	Serial communication data signal input
	12	PU DO	O	DC0V/3.3V	Serial communication data signal output
YC7	1	GND	-	-	Ground
	2	24V2	O	DC24V	DC24V power output
YC8	1	EJECT MOT 2B	O	DC0V/24V(pulse)	Exit motor control signal
	2	EJECT MOT 1B	O	DC0V/24V(pulse)	Exit motor control signal
	3	EJECT MOT 2A	O	DC0V/24V(pulse)	Exit motor control signal
	4	EJECT MOT 1A	O	DC0V/24V(pulse)	Exit motor control signal
	5	STP MOV MOT 2B	O	DC0V/24V(pulse)	Slide motor control signal
	6	STP MOV MOT 1B	O	DC0V/24V(pulse)	Slide motor control signal
	7	STP MOV MOT 2A	O	DC0V/24V(pulse)	Slide motor control signal
	8	STP MOV MOT 1A	O	DC0V/24V(pulse)	Slide motor control signal
	9	EJE RELS MOT 2B	O	DC0V/24V(pulse)	Exit release motor control signal
	10	EJE RELS MOT 1B	O	DC0V/24V(pulse)	Exit release motor control signal
	11	EJE RELS MOT 2A	O	DC0V/24V(pulse)	Exit release motor control signal
	12	EJE RELS MOT 1A	O	DC0V/24V(pulse)	Exit release motor control signal
	13	ENTRY MOT 2B	O	DC0V/24V(pulse)	Paper entry motor control signal
	14	ENTRY MOT 1B	O	DC0V/24V(pulse)	Paper entry motor control signal
	15	ENTRY MOT 2A	O	DC0V/24V(pulse)	Paper entry motor control signal
	16	ENTRY MOT 1A	O	DC0V/24V(pulse)	Paper entry motor control signal
	17	MIDDLE MOT 2B	O	DC0V/24V(pulse)	Middle motor control signal
	18	MIDDLE MOT 1B	O	DC0V/24V(pulse)	Middle motor control signal
	19	MIDDLE MOT 2A	O	DC0V/24V(pulse)	Middle motor control signal
	20	MIDDLE MOT 1A	O	DC0V/24V(pulse)	Middle motor control signal
YC9	1	PADDLE MOT 2B	O	DC0V/24V(pulse)	Paddle motor control signal
	2	PADDLE MOT 1B	O	DC0V/24V(pulse)	Paddle motor control signal
	3	PADDLE MOT 2A	O	DC0V/24V(pulse)	Paddle motor control signal
	4	PADDLE MOT 1A	O	DC0V/24V(pulse)	Paddle motor control signal
	5	SIDE REG R MOT 2B	O	DC0V/24V(pulse)	Side registration motor 2 control signal
	6	SIDE REG R MOT 1B	O	DC0V/24V(pulse)	Side registration motor 2 control signal
	7	SIDE REG R MOT 2A	O	DC0V/24V(pulse)	Side registration motor 2 control signal
	8	SIDE REG R MOT 1A	O	DC0V/24V(pulse)	Side registration motor 2 control signal
	9	SIDE REG F MOT 2B	O	DC0V/24V(pulse)	Side registration motor 1 control signal
	10	SIDE REG F MOT 1B	O	DC0V/24V(pulse)	Side registration motor 1 control signal
	11	SIDE REG F MOT 2A	O	DC0V/24V(pulse)	Side registration motor 1 control signal
	12	SIDE REG F MOT 1A	O	DC0V/24V(pulse)	Side registration motor 1 control signal
YC10	1	STPMOT OUT1	O	DC0V/24V(pulse)	Stapler control signal
	2	STPMOT OUT1	O	DC0V/24V(pulse)	Stapler control signal
	3	STPMOT OUT1	O	DC0V/24V(pulse)	Stapler control signal
	4	STPMOT OUT1	O	DC0V/24V(pulse)	Stapler control signal
	5	STPMOT OUT2	O	DC0V/24V(pulse)	Stapler control signal
	6	STPMOT OUT2	O	DC0V/24V(pulse)	Stapler control signal
	7	STPMOT OUT2	O	DC0V/24V(pulse)	Stapler control signal
	8	STPMOT OUT2	O	DC0V/24V(pulse)	Stapler control signal
	9	GND	-	-	Ground
	10	LS	I	DC0V/3.3V	Staple unit LS signal

Connector	Pin	Signal	I/O	Voltage	Description
	11	READY	I	DC0V/3.3V	Staple unit READY signal
	12	5V	O	DC5V	DC5V power output
	13	HP	I	DC0V/3.3V	Staple unit HP signal
YC11	1	TRY MOT OUT2	O	DC0V/24V(pulse)	Tray motor control signal
	2	TRY MOT OUT1	O	DC0V/24V(pulse)	Tray motor control signal
YC16	1	MTRY U SENS K	I	DC0V/3.3V	Tray paper full sensor 1: On/Off
	2	GND	-	-	Ground
	3	MTRY U SENS SIG	I	DC0V/3.3V	Tray paper full sensor 2: On/Off
	4	3.3V	O	DC3.3V	DC3.3V power output
	5	3.3V	O	DC3.3V	DC3.3V power output
	6	MTRY U SENS K	O	DC0V/3.3V	Tray paper full sensor: On/Off
YC17	1	MID EJE SENS A	-	-	Not used
	2	GND	-	-	Not used
	3	MID EJE SENS SIG	-	-	Not used
	4	GND	-	-	Ground
	5	ENTRY SENS SIG	I	DC0V/3.3V	Paper entry sensor: On/Off
	6	3.3V	O	DC3.3V	DC3.3V power output
YC18	1	MID EJE SENS A	O	DC5V	DC5V power output
	2	GND	-	-	Ground
	3	MID EJE SENS SIG	I	DC0V/3.3V	Middle sensor: On/Off
YC19	A1	SID REG R SENS A	O	DC5V	DC5V power output
	A2	GND	-	-	Ground
	A3	SID REG R SENS SIG	I	DC0V/3.3V	Side registration sensor 2: On/Off
	A4	SID REG F SENS A	O	DC5V	DC5V power output
	A5	GND	-	-	Ground
	A6	SID REG F SENS SIG	I	DC0V/3.3V	Side registration sensor 1: On/Off
	A7	GND	-	-	Ground
	A8	PAP SENS SIG	I	DC0V/3.3V	Exit paper sensor: On/Off
	A9	3.3V	O	DC3.3V	DC3.3V power output
	A10	BUNDLE SENS A	O	DC5V	DC5V power output
	A11	GND	-	-	Ground
	A12	BUNDLE SENS SIG	I	DC0V/3.3V	Bundle exit sensor: On/Off
	A13	PADDLE SENS A	O	DC5V	DC5V power output
	A14	GND	-	-	Ground
	A15	PADDLE SENS SIG	I	DC0V/3.3V	Paddle sensor: On/Off
	B1	MTRY HP SENS A	O	DC5V	DC5V power output
	B2	GND	-	-	Ground
	B3	MTRY HP SENS SIG	I	DC0V/3.3V	Tray sensor 1: On/Off
	B4	MTRY HALF SENS A	O	DC5V	DC5V power output
	B5	GND	-	-	Ground
	B6	MTRY HALF SENS SIG	I	DC0V/3.3V	Tray sensor 2: On/Off
	B7	MTRY FULL SENS A	O	DC5V	DC5V power output
	B8	GND	-	-	Ground
	B9	MTRY FULL SENS SIG	I	DC0V/3.3V	Tray sensor 3: On/Off
	B10	ADJUST SENS A	O	DC5V	DC5V power output
	B11	GND	-	-	Ground

Connector	Pin	Signal	I/O	Voltage	Description
	B12	ADJUST SENS SIG	I	DC0V/3.3V	Adjustment sensor: On/Off
	B13	STP MOV SENS A	O	DC5V	DC5V power output
	B14	GND	-	-	Ground
	B15	STP MOV SENS SIG	I	DC0V/3.3V	Slide sensor: On/Off

(15)JS PWB (JS-7110)

(15-1)PWB photograph

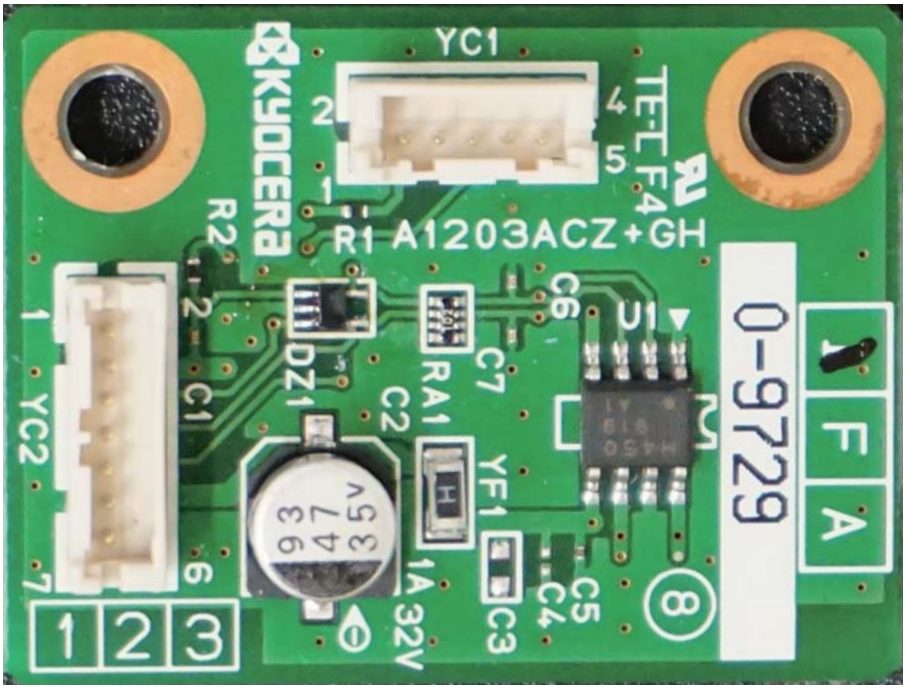

(15-2)Connector position

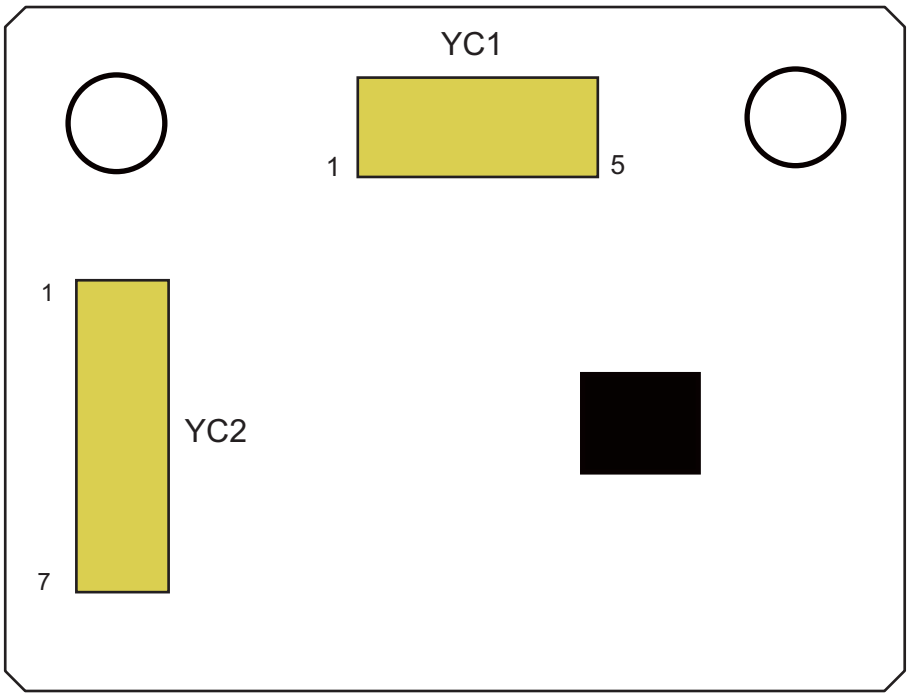

(15-3)Connector lists

Destination

- YC1: JS sensor/JS motor
- YC2: Image drive PWB

Connector	Pin	Signal	I/O	Voltage	Description
YC1	1	+3.3V_LED	O	Analog	Control signal
	2	GND	-	-	Ground
	3	HP_SENS	I	0V/3.3V	Sensor signal
	4	OUT1	O	0V/24V	Motor out put
	5	OUT2	O	0V/24V	Motor out put
YC2	1	SET	O	Analog	Control signal
	2	3.3V	I	3.3V	Power suplly
	3	HP_SENS	O	0V/3.3V	Sensor signal
	4	IN1	I	0V/3.3V	Control signal
	5	IN2	I	0V/3.3V	Control signal
	6	24V	I	24V	Power suplly
	7	GND	-	-	Ground

(16)DF PWB (DF-7150)

(16-1)PWB photograph

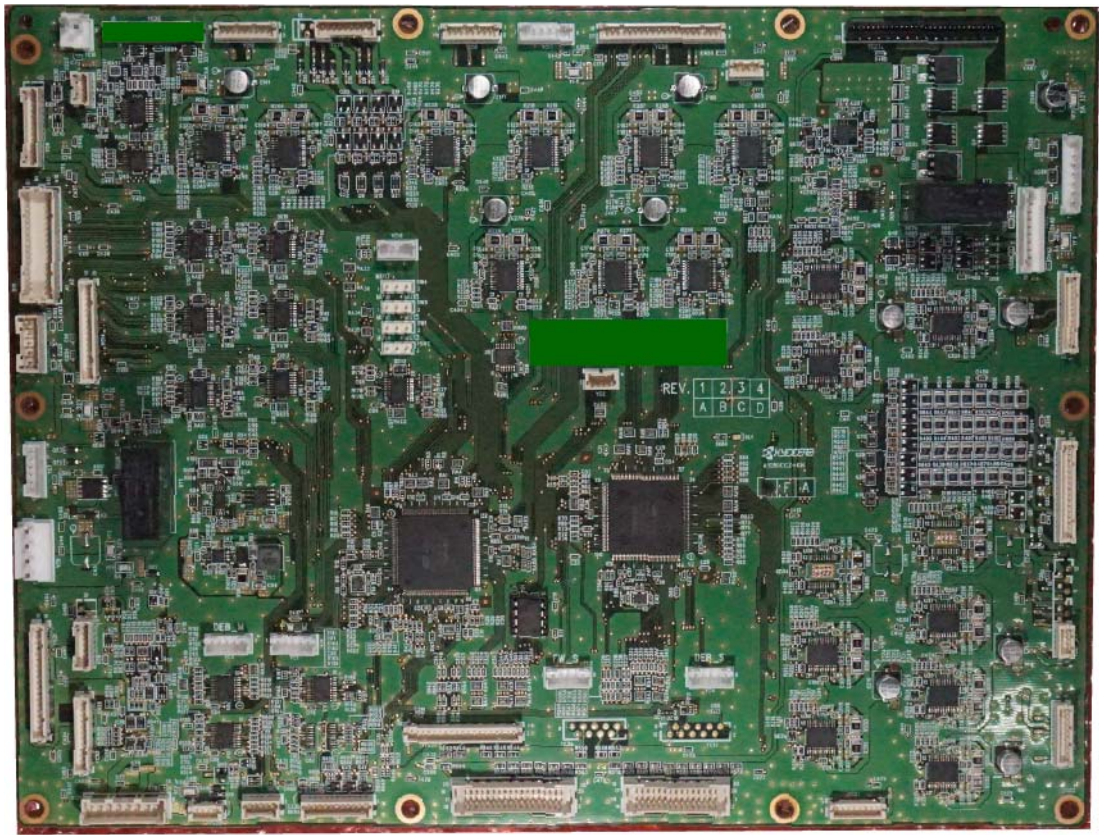

(16-2)Connector position

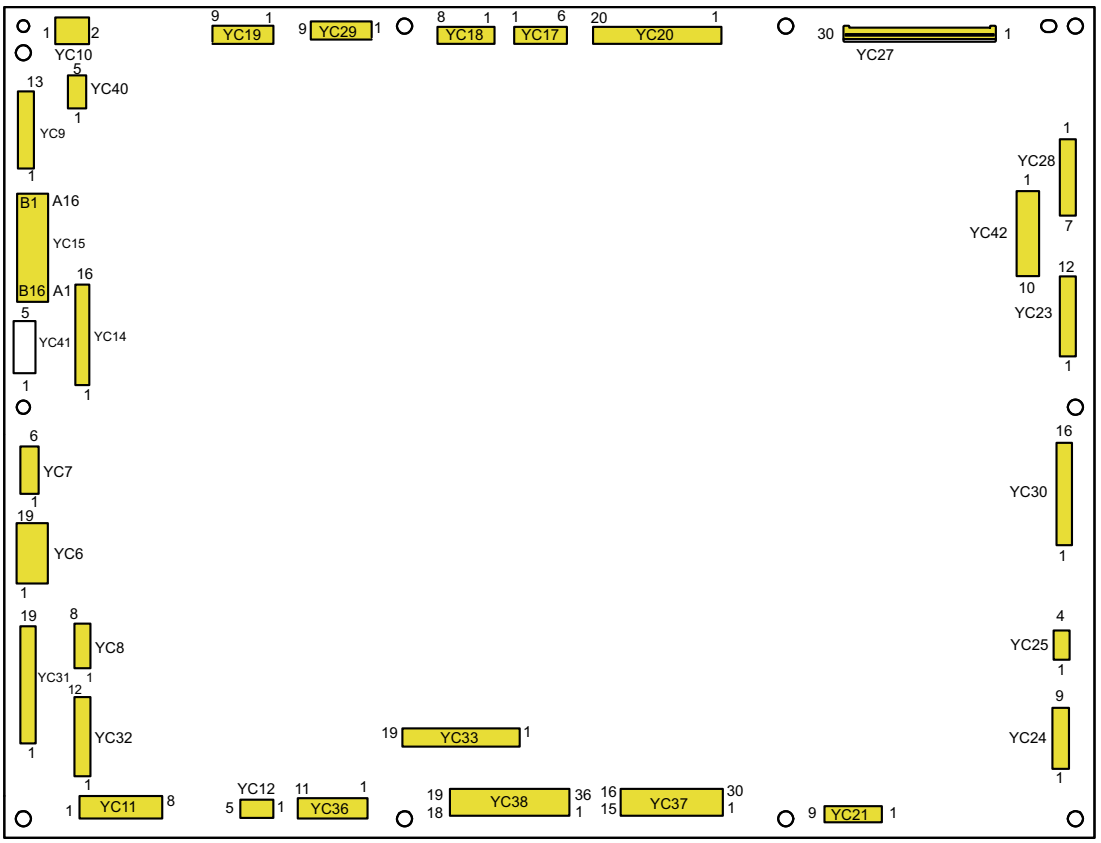

(16-3)Connector lists

Destination

- YC6: Power supply input (BR PWB)
- YC7: Front cover switch
- YC8: Main unit communication interface
- YC9: PH PWB communication
- YC10: PH PWB power
- YC11: BF PWB power
- YC12: BF PWB communication
- YC14: Middle motor, Exit upper motor
- YC15: Paper entry motor, Relief motor, Sub tray exit motor, Sub tray exit middle motor
- YC17: Slide motor
- YC18: Bundle exit motor 1, Bundle exit motor 2
- YC19: Adjusting pulley motor, Paper trail press guide motor
- YC20: Exit support guide motor, Exit paper holding motor, Exit paddle motor, Exit motor
- YC21: Side registration motor 1, Side registration motor 2
- YC23: Shift motor 1, Side registration motor 2, Shift release motor
- YC24: Exit release motor, Draw-in pressure release motor
- YC25: Adjusting release motor
- YC27: Staple (Staple relay PWB)
- YC28: Tray motor
- YC29: Feedshift solenoid 1/2/3
- YC30: Front bundle exit fan, Rear bundle exit fan, Rear middle exit fan, Front middle exit fan, Rear upper exit fan, Front upper exit fan, Upper middle exit fan 1, Upper middle exit fan 2
- YC31: Paper entry sensor, Paper entry timing sensor, Drum sensor, Drum timing sensor, Sub tray exit sensor, Sub tray full sensor (photo transmitter)
- YC32: DF operation PWB, Tray paper full sensor 1 (photo transmitter), Middle sensor
- YC33: Tray sensor 1/2/3/4/5, Tray paper full sensor 2
- YC36: Slide sensor, Staple tank switch, Staple full sensor 1/2
- YC37: Draw-in release HP sensor, Bundle exit sensor, Paper trail press guide HP sensor, Adjusting release HP sensor, Front shift HP sensor, Rear shift HP sensor, Shift set sensor, Shift release sensor, Lower exit paper sensor
- YC38: Side registration HP sensor 1, Side registration HP sensor 2, Bundle exit HP sensor 1/2, Upper exit paper sensor, Exit paper holding sensor, Exit support guide HP sensor, Exit paddle HP sensor
- YC40: ZF PWB
- YC42: Exit guide switch, Switch solenoid

Connector	Pin	Signal	I/O	Voltage	Description
YC6	1	24V	I	DC24V	DC24V input
	2	24V	I	DC24V	DC24V input
	3	GND	-	-	Ground
	4	GND	-	-	Ground

Connector	Pin	Signal	I/O	Voltage	Description
YC7	1	24V	O	DC24V	DC24V power output
	2	GND	-	-	Ground
	3	FR_COVER	I	DC0V/24V	Front cover switch: On/Off
	4	-	-	-	Not used
	5	-	-	-	Not used
	6	-	-	-	Not used
YC8	1	GND	-	-	Ground
	2	DET	O	-	Ground
	3	MFP_RDY	O	DC0V/3.3V	Ready signal
	4	MFP_SEL	I	DC0V/3.3V	Select signal
	5	MFP_CLK	I	DC0V/3.3V(pulse)	Serial communication clock signal
	6	MFP_DI	I	DC0V/3.3V(pulse)	Serial communication data signal input
	7	MFP_DO	O	DC0V/3.3V(pulse)	Serial communication data signal output
YC9	1	5V	O	DC5V	DC5V output
	2	3.3V	O	DC3.3V	DC3.3V output
	3	3.3V	O	DC3.3V	DC3.3V output
	4	GND	-	-	Ground
	5	GND	-	-	Ground
	6	PH_EDGE	O	DC0V/3.3V	PH_EDGE signal
	7	PH_MOT	O	DC0V/3.3V	PH_MOT signal
	8	PH_RDY	I	DC0V/3.3V	Ready signal
	9	PH_SEL	O	DC0V/3.3V	Select signal
	10	PH_SCL	O	DC0V/3.3V(pulse)	Serial communication clock signal
	11	PH_SDI	I	DC0V/3.3V(pulse)	Serial communication data signal input
	12	PH_SDO	O	DC0V/3.3V(pulse)	Serial communication data signal output
YC10	1	GND	-	-	Ground
	2	24V	O	DC24V	DC24V output
YC11	1	3.3V	O	DC3.3V	DC3.3V output
	2	GND	-	-	Ground
	3	GND	-	-	Ground
	4	5V	O	DC5V	DC5V output
	5	GND	-	-	Ground
	6	GND	-	-	Ground
	7	24V	O	DC24V	DC24V output
	8	24V	O	DC24V	DC24V output
YC12	1	BF_SDI	I	DC0V/3.3V(pulse)	Serial communication data signal input
	2	BF_SDO	O	DC0V/3.3V(pulse)	Serial communication data signal output
	3	BF_SCL	O	DC0V/3.3V(pulse)	Serial communication clock signal
	4	BF_SEL	O	DC0V/3.3V	Select signal
	5	BF_RDY	I	DC0V/3.3V	Ready signal
YC14	1	MDLMOT_CH_A	I	DC0V/3.3V(pulse)	Middle motor encoder A signal
	2	MDLMOT_CH_B	I	DC0V/3.3V(pulse)	Middle motor encoder B signal
	3	3.3V	O	DC3.3V	DC3.3V power output
	4	MDLMOT_DIR	O	DC0V/3.3V	Middle motor rotation switching signal
	5	MDLMOT_PWM	O	DC0V/3.3V(pulse)	Middle motor drive control signal
	6	MDLMOT_BRAKE	O	DC0V/3.3V	Middle motor brake signal

Connector	Pin	Signal	I/O	Voltage	Description
	7	GND	-	-	Ground
	8	24V	O	DC24V	DC24V power output
	9	EXTUMOT_CH_A	I	DC0V/3.3V(pulse)	Upper exit motor encoder A signal
	10	EXTUMOT_CH_B	I	DC0V/3.3V(pulse)	Upper exit motor encoder B signal
	11	3.3V	O	DC3.3V	DC3.3V power output
	12	EXTUMOT_DIR	O	DC0V/3.3V	Upper exit motor rotation switching signal
	13	EXTUMOT_PWM	O	DC0V/3.3V(pulse)	Upper exit motor drive control signal
	14	EXTUMOT_BRAKE	O	DC0V/3.3V	Upper exit motor brake signal
	15	GND	-	-	Ground
	16	24V	O	DC24V	DC24V power output
YC15	A1	CINMOT_CH_A	I	DC0V/3.3V(pulse)	Paper entry motor encoder A signal
	A2	CINMOT_CH_B	I	DC0V/3.3V(pulse)	Paper entry motor encoder B signal
	A3	3.3V	O	DC3.3V	DC3.3V power output
	A4	CINMOT_DIR	O	DC0V/3.3V	Paper entry motor rotation switching signal
	A5	CINMOT_PWM	O	DC0V/3.3V(pulse)	Paper entry motor drive control signal
	A6	CINMOT_BRAKE	O	DC0V/3.3V	Paper entry motor brake signal
	A7	GND	-	-	Ground
	A8	24V	O	DC24V	DC24V power output
	A9	DRMMOT_CH_A	I	DC0V/3.3V(pulse)	Relief drum motor encoder A signal
	A10	DRMMOT_CH_B	I	DC0V/3.3V(pulse)	Relief drum motor encoder B signal
	A11	3.3V	O	DC3.3V	DC3.3V power output
	A12	DRMMOT_DIR	O	DC0V/3.3V	Relief drum motor rotation switching signal
	A13	DRMMOT_PWM	O	DC0V/3.3V	Relief drum motor drive control signal
	A14	DRMMOT_BRAKE	O	DC0V/3.3V	Relief drum motor brake signal
	A15	GND	-	-	Ground
	A16	24V	O	DC24V	DC24V power output
	B1	BEXTMOT_CH_A	I	DC0V/3.3V(pulse)	Sub tray exit motor encoder A signal
	B2	BEXTMOT_CH_B	I	DC0V/3.3V(pulse)	Sub tray exit motor encoder B signal
	B3	3.3V	O	DC3.3V	DC3.3V power output
	B4	BEXTMOT_DIR	O	DC0V/3.3V	Sub tray exit motor rotation switching signal
	B5	BEXTMOT_PWM	O	DC0V/3.3V	Sub tray exit motor drive control signal
	B6	BEXTMOT_BRAKE	O	DC0V/3.3V	Sub tray exit motor brake signal
	B7	GND	-	-	Ground
	B8	24V	O	DC24V	DC24V power output
	B9	-	-	-	Not used
	B10	-	-	-	Not used
	B11	-	-	-	Not used
	B12	-	-	-	Not used
	B13	-	-	-	Not used
	B14	-	-	-	Not used
	B15	-	-	-	Not used
	B16	-	-	-	Not used
YC17	1	STMMOT_A/	O	0V/24V(pulse)	Slide motor drive control
	2	-	-	-	Not used

Connector	Pin	Signal	I/O	Voltage	Description
	3	STMMOT_A	O	DC0V/24V(pulse)	Slide motor drive control
	4	STMMOT_B	O	DC0V/24V(pulse)	Slide motor drive control
	5	-	-	-	Not used
YC18	6	STMMOT_B/	O	0V/24V(pulse)	Slide motor drive control
	1	TABAMOT1_B/	O	DC0V/24V(pulse)	Bundle exit motor 1 drive control
	2	TABAMOT1_B	O	DC0V/24V(pulse)	Bundle exit motor 1 drive control
	3	TABAMOT1_A	O	DC0V/24V(pulse)	Bundle exit motor 1 drive control
	4	TABAMOT1_A/	O	DC0V/24V(pulse)	Bundle exit motor 1 drive control
	5	TABAMOT2_B/	O	DC0V/24V(pulse)	Bundle exit motor 2 drive control
	6	TABAMOT2_B	O	DC0V/24V(pulse)	Bundle exit motor 2 drive control
	7	TABAMOT2_A	O	DC0V/24V(pulse)	Bundle exit motor 2 drive control
	8	TABAMOT2_A/	O	DC0V/24V(pulse)	Bundle exit motor 2 drive control
YC19	1	MCHMOT_B/	O	DC0V/24V(pulse)	Adjusting pulley motor drive control
	2	MCHMOT_A/	O	DC0V/24V(pulse)	Adjusting pulley motor drive control
	3	MCHMOT_B	O	DC0V/24V(pulse)	Adjusting pulley motor drive control
	4	MCHMOT_A	O	DC0V/24V(pulse)	Adjusting pulley motor drive control
	5	PINGMOT_B/	O	DC0V/24V(pulse)	Paper trail press guide motor drive control
	6	PINGMOT_A/	O	DC0V/24V(pulse)	Paper trail press guide motor drive control
	7	PINGMOT_B	O	DC0V/24V(pulse)	Paper trail press guide motor drive control
	8	PINGMOT_A	O	DC0V/24V(pulse)	Paper trail press guide motor drive control
	9	-	-	-	Not used
YC20	1	ESPTMOT_B/	O	DC0V/24V(pulse)	Exit support guide motor drive control
	2	ESPTMOT_A/	O	DC0V/24V(pulse)	Exit support guide motor drive control
	3	ESPTMOT_B	O	DC0V/24V(pulse)	Exit support guide motor drive control
	4	ESPTMOT_A	O	DC0V/24V(pulse)	Exit support guide motor drive control
	5	EHLDMOT_B/	O	DC0V/24V(pulse)	Exit paper holding motor drive control
	6	EHLDMOT_A/	O	DC0V/24V(pulse)	Exit paper holding motor drive control
	7	EHLDMOT_B	O	DC0V/24V(pulse)	Exit paper holding motor drive control
	8	EHLDMOT_A	O	DC0V/24V(pulse)	Exit paper holding motor drive control
	9	EPDLMOT_B/	O	DC0V/24V(pulse)	Exit paddle motor drive control
	10	EPDLMOT_A/	O	DC0V/24V(pulse)	Exit paddle motor drive control
	11	EPDLMOT_B	O	DC0V/24V(pulse)	Exit paddle motor drive control
	12	EPDLMOTA	O	DC0V/24V(pulse)	Exit paddle motor drive control
	13	EXTMOT_CH_A	I	DC0V/3.3V(pulse)	Exit motor encoder A signal
	14	EXTMOT_CH_B	I	DC0V/3.3V(pulse)	Exit motor encoder B signal
	15	3.3V	O	DC3.3V	DC3.3V power output
	16	EXTMOT_DIR	O	DC0V/3.3V	Exit motor rotation switching signal
	17	EXTMOT_PWM	O	DC0V/3.3V	Exit motor drive control signal
	18	EXTMOT_BRAKE	O	DC0V/3.3V	Exit motor brake signal
	19	GND	-	-	Ground
	20	24V	O	DC24V	DC24V power output
YC21	1	WDRMOT_B/	O	DC0V/24V(pulse)	Side registration motor 2 drive control
	2	WDRMOT_B	O	DC0V/24V(pulse)	Side registration motor 2 drive control
	3	WDRMOT_A	O	DC0V/24V(pulse)	Side registration motor 2 drive control
	4	WDRMOT_A/	O	DC0V/24V(pulse)	Side registration motor 2 drive control
	5	WDFMOT_B/	O	DC0V/24V(pulse)	Side registration motor 1 drive control

Connector	Pin	Signal	I/O	Voltage	Description
	6	WDFMOT_B	O	DC0V/24V(pulse)	Side registration motor 1 drive control
	7	WDFMOT_A	O	DC0V/24V(pulse)	Side registration motor 1 drive control
	8	WDFMOT_A/	O	DC0V/24V(pulse)	Side registration motor 1 drive control
YC23	1	SFRMOT_B/	O	DC0V/24V(pulse)	Shift motor 1 drive control
	2	SFRMOT_B	O	DC0V/24V(pulse)	Shift motor 1 drive control
	3	SFRMOT_A	O	DC0V/24V(pulse)	Shift motor 1 drive control
	4	SFRMOT_A/	O	DC0V/24V(pulse)	Shift motor 1 drive control
	5	SFFMOT_B/	O	DC0V/24V(pulse)	Shift motor 2 drive control
	6	SFFMOT_B	O	DC0V/24V(pulse)	Shift motor 2 drive control
	7	SFFMOT_A	O	DC0V/24V(pulse)	Shift motor 2 drive control
	8	SFFMOT_A/	O	DC0V/24V(pulse)	Shift motor 2 drive control
	9	SFCMOT_B/	O	DC0V/24V(pulse)	Shift release motor drive control
	10	SFCMOT_B	O	DC0V/24V(pulse)	Shift release motor drive control
	11	SFCMOT_A	O	DC0V/24V(pulse)	Shift release motor drive control
	12	SFCMOT_A/	O	DC0V/24V(pulse)	Shift release motor drive control
YC24	1	EXCMOT_B/	O	DC0V/24V(pulse)	Exit release motor drive control
	2	EXCMOT_B	O	DC0V/24V(pulse)	Exit release motor drive control
	3	EXCMOT_A	O	DC0V/24V(pulse)	Exit release motor drive control
	4	EXCMOT_A/	O	DC0V/24V(pulse)	Exit release motor drive control
	5	PINCMOT_B/	O	DC0V/24V(pulse)	Draw-in pressure release motor drive control
	6	PINCMOT_B	O	DC0V/24V(pulse)	Draw-in pressure release motor drive control
	7	PINCMOT_A	O	DC0V/24V(pulse)	Draw-in pressure release motor drive control
	8	PINCMOT_A/	O	DC0V/24V(pulse)	Draw-in pressure release motor drive control
	9	-	-	-	Not used
YC25	1	MCHCMOT_B/	O	DC0V/24V(pulse)	Adjusting release motor drive control
	2	MCHCMOT_B	O	DC0V/24V(pulse)	Adjusting release motor drive control
	3	MCHCMOT_A	O	DC0V/24V(pulse)	Adjusting release motor drive control
	4	MCHCMOT_A/	O	DC0V/24V(pulse)	Adjusting release motor drive control
YC27	1	STMOT+	O	DC0V/24V	Staple motor drive control
	2	STMOT+	O	DC0V/24V	Staple motor drive control
	3	STMOT+	O	DC0V/24V	Staple motor drive control
	4	STMOT+	O	DC0V/24V	Staple motor drive control
	5	STMOT+	O	DC0V/24V	Staple motor drive control
	6	STMOT+	O	DC0V/24V	Staple motor drive control
	7	STMOT+	O	DC0V/24V	.Staple motor drive control
	8	STMOT+	O	DC0V/24V	.Staple motor drive control
	9	STMOT+	O	DC0V/24V	.Staple motor drive control
	10	STMOT+	O	DC0V/24V	.Staple motor drive control
	11	-	-	-	Not used
	12	STMOT-	O	DC0V/24V	Staple motor drive control
	13	STMOT-	O	DC0V/24V	.Staple motor drive control
	14	STMOT-	O	DC0V/24V	.Staple motor drive control
	15	STMOT-	O	DC0V/24V	.Staple motor drive control

Connector	Pin	Signal	I/O	Voltage	Description
	16	STMOT-	O	DC0V/24V	.Staple motor drive control
	17	STMOT-	O	DC0V/24V	.Staple motor drive control
	18	STMOT-	O	DC0V/24V	.Staple motor drive control
	19	STMOT-	O	DC0V/24V	.Staple motor drive control
	20	STMOT-	O	DC0V/24V	.Staple motor drive control
	21	STMOT-	O	DC0V/24V	.Staple motor drive control
	22	5V	O	DC5V	DC5V power output
	23	5V	O	DC5V	DC5V power output
	24	STLS	I	DC0V/3.3V	Staple sensor: On/Off
	25	STHP	I	DC0V/3.3V	Staple HP sensor: On/Off
	26	GND	-	-	Ground
	27	-	-	-	Not used
	28	STSP	I	DC0V/3.3V	Staple ready: On/Off
	29	GND	-	-	Ground
	30	-	-	-	Not used
YC28	1	TRAYMOT_BRK	O	DC0V/5V	Tray motor brake signal
	2	TRAYMOT_DIR	O	DC0V/5V	Tray motor rotation switching signal
	3	TRAYMOT_LD	I	DC0V/5V	Tray motor rotation synchronizing signal
	4	TRAYMOT_CLK	O	DC0V/5V(pulse)	Tray motor clock signal
	5	TRAYMOT_EN	O	DC0V/5V	Tray motor remote signal
	6	GND	-	-	Ground
	7	24V	O	DC24V	DC24V power output
YC29	1	24V	O	DC24V	DC24V power output
	2	M/DSOL_ATT	O	DC0V/24V	Feedshift solenoid 2 drive control
	3	M/DSOL_HLD	O	DC0V/24V	Feedshift solenoid 2 drive control
	4	24V	O	DC24V	DC24V power output
	5	D/BSOL_ATT	O	DC0V/24V	Feedshift solenoid 1 drive control
	6	D/BSOL_HLD	O	DC0V/24V	Feedshift solenoid 1 drive control
	7	24V	O	DC24V	DC24V power output
	8	S/MSOL_ATT	O	DC0V/24V	Feedshift solenoid 3 drive control
	9	S/MSOL_HLD	O	DC0V/24V	Feedshift solenoid 3 drive control
YC30	1	24V	O	DC24V	DC24V power output
	2	TABA_FAN_CENTER1	O	DC0V/24V	Front bundle exit fan drive signal
	3	24V	O	DC24V	DC24V power output
	4	TABA_FAN_CENTER2	O	DC0V/24V	Rear bundle exit fan drive signal
	5	TABA_FAN_SIDE1			Rear middle exit fan drive signal
	6	24V	O	DC24V	DC24V power output
	7	TABA_FAN_SIDE2			Front middle exit fan drive signal
	8	24V	O	DC24V	DC24V power output
	9	EXTUPR_FAN_SIDE1			Rear upper exit fan drive signal
	10	24V	O	DC24V	DC24V power output
	11	EXTUPR_FAN_SIDE2			Front upper exit fan drive signal
	12	24V	O	DC24V	DC24V power output
	13	EXTUPR_FAN_CENTER1			Upper middle exit fan 1 drive signal
	14	24V	O	DC24V	DC24V power output
	15	EXTUPR_FAN_CENTER2			Upper middle exit fan 2 drive signal

Connector	Pin	Signal	I/O	Voltage	Description
	16	24V	O	DC24V	DC24V power output
YC31	1	GND	-	-	Ground
	2	CIN_SENS	I	DC0V/3.3V	Paper entry sensor: On/Off
	3	3.3V	O	DC3.3V	DC3.3V power output
	4	GND	-	-	Ground
	5	CINTMG_SENS	I	DC0V/3.3V	Paper entry timing sensor: On/Off
	6	3.3V	O	DC3.3V	DC3.3V power output
	7	GND	-	-	Ground
	8	DRMTMG_SENS	I	DC0V/3.3V	Drum timing sensor: On/Off
	9	3.3V	O	DC3.3V	DC3.3V power output
	10	GND	-	-	Ground
	11	DRM_SENS	I	DC0V/3.3V	Drum (Relief path) sensor: On/Off
	12	3.3V	O	DC3.3V	DC3.3V power output
	13	GND	-	-	Ground
	14	BEXT_SENS	I	DC0V/3.3V	Sub tray exit sensor: On/Off
	15	3.3V	O	DC3.3V	DC3.3V power output
	16	3.3V	O	DC3.3V	DC3.3V power output
	17	GND	-	-	Ground
	18	BFULL_SENS	I	DC0V/3.3V	Sub tray full sensor: On/Off
	19	BFULL_PLS	I	DC0V/3.3V(pulse)	Sub tray full sensor photo transmitter control
YC32	1	MST_LED1	O	DC0V/5V	DF operation PWB LED1 drive
	2	MST_LED2	O	DC0V/5V	DF operation PWB LED2 drive
	3	MST_LED3	O	DC0V/5V	DF operation PWB LED3 drive
	4	MST_LED4	O	DC0V/5V	DF operation PWB LED4 drive
	5	MST_KEY1	O	DC0V/3.3V	DF operation PWB KEY1: On/Off
	6	MST_KEY2	O	DC0V/3.3V	DF operation PWB KEY2: On/Off
	7	GND	-	-	Ground
	8	3.3V	O	DC3.3V	DC3.3V power output
	9	ASURF_SENS_K	O	DC0V/3.3V(pulse)	Tray paper full sensor 1: photo transmitter control
	10	GND	-	-	Ground
	11	MDL_SENS	I	DC0V/3.3V	Middle sensor: On/Off
	12	3.3V	O	DC3.3V	DC3.3V power output
YC33	1	AHP2_SENS_LED	O	DC5V	DC5V power output
	2	GND	-	-	Ground
	3	AHP2_SENS	I	DC0V/3.3V	Tray sensor 1: On/Off
	4	AHP1_SENS_LED	O	DC5V	DC5V power output
	5	GND	-	-	Ground
	6	AHP1_SENS	I	DC0V/3.3V	Tray sensor 2: On/Off
	7	AHALF_SENS_LED	O	DC5V	DC5V power output
	8	GND	-	-	Ground
	9	AHALF_SENS	I	DC0V/3.3V	Tray sensor 3: On/Off
	10	BFFULL_SENS_LED	O	DC5V	DC5V power output
	11	GND	-	-	Ground
	12	BFFULL_SENS	I	DC0V/3.3V	Tray sensor 5: On/Off

Connector	Pin	Signal	I/O	Voltage	Description
	13	AFULL_SENS_LED	O	DC5V	DC5V power output
	14	GND	-	-	Ground
	15	AFULL_SENS	I	DC0V/3.3V	Tray sensor 4: On/Off
	16	ASURF_SENS_K	I	DC0V/3.3V(pulse)	Tray paper full sensor 2: photo transmitter control
	17	GND	-	-	Ground
	18	ASURF_SENS	I	DC0V/3.3V	Tray paper full sensor 2: On/Off
	19	3.3V	O	DC3.3V	DC3.3V power output
YC36	1	STPMHP_SENS_LED	O	DC5V	DC5V power output
	2	GND	-	-	Ground
	3	STPMHP_SENS	I	DC0V/3.3V	Staple drive HP sensor: On/Off
	4	STPTANK_LEDA	O	DC3.3V	TNKLED_Rear control signal
	5	STPTANK_LEDB	O	DC3.3V	TNKLED_Middle control signal
	6	STPTANK_LEDC	O	DC3.3V	TNKLED_Center control signal
	7	STPTANK_AN	I	DC3.3V	DC3.3V power output
	8	GND	-	-	Ground
	9	STPTANK_SW	I	DC0V/3.3V	Staple tank switch: On/Off
	10	STPTANK_FULL	I	DC0V/3.3V	Staple full sensor: On/Off
	11	GND	-	-	Ground
YC37	1	PINCHP_SENS_LED	O	DC5V	DC5V power output
	2	GND	-	-	Ground
	3	PINCHP_SENS	I	DC0V/3.3V	Draw-in release HP sensor: On/Off
	4	EXCHP_SENS_LED	O	DC5V	DC5V power output
	5	GND	-	-	Ground
	6	EXCHP_SENS	I	DC0V/3.3V	Exit release HP sensor: On/Off
	7	PINGHP_SENS_LED	O	DC5V	DC5V power output
	8	GND	-	-	Ground
	9	PINGHP_SENS	I	DC0V/3.3V	DF trail press guide HP sensor: On/Off
	10	RESERVE_4_LED	-	-	Not used
	11	GND	-	-	Not used
	12	RESERVE_4	-	-	Not used
	13	RESERVE_5_LED	-	-	Not used
	14	GND	-	-	Not used
	15	RESERVE_5	-	-	Not used
	16	MCHCHP_SENS_LED	O	DC5V	DC5V power output
	17	GND	-	-	Ground
	18	MCHCHP_SENS	I	DC0V/3.3V	Adjusting release HP sensor: On/Off
	19	SFFHP_SENS_LED	O	DC5V	DC5V power output
	20	GND	-	-	Ground
	21	SFFHP_SENS	I	DC0V/3.3V	Front shift HP sensor: On/Off
	22	SFRHP_SENS_LED	O	DC5V	DC5V power output
	23	GND	-	-	Ground
	24	SFRHP_SENS	I	DC0V/3.3V	Rear shift HP sensor: On/Off
	25	SFSET_SENS_LED	O	DC5V	DC5V power output
	26	GND	-	-	Ground
	27	SFSET_SENS	I	DC0V/3.3V	Shift set sensor: On/Off

Connector	Pin	Signal	I/O	Voltage	Description
	28	SFCHP_SENS_LED	O	DC5V	DC5V power output
	29	GND	-	-	Ground
	30	SFCHP_SENS	I	DC0V/3.3V	Shift release sensor: On/Off
YC38	1	WDFHP_SENS_LED	O	DC5V	DC5V power output
	2	GND	-	-	Ground
	3	WDFHP_SENS	I	DC0V/3.3V	Side registration HP sensor 1: On/Off
	4	WDRHP_SENS_LED	O	DC5V	DC5V power output
	5	GND	-	-	Ground
	6	WDRHP_SENS	I	DC0V/3.3V	Side registration HP sensor 2: On/Off
	7	TABA1_SENS_LED	O	DC5V	DC5V power output
	8	GND	-	-	Ground
	9	TABA1_SENS	I	DC0V/3.3V	Bundle exit HP sensor 1: On/Off
	10	TABA2_SENS_LED	O	DC5V	DC5V power output
	11	GND	-	-	Ground
	12	TABA2_SENS	I	DC0V/3.3V	Bundle exit HP sensor 2: On/Off
	13	3.3V	O	DC3.3V	DC3.3V power output
	14	EXIT_SENS_K	O	DC0V/3.3V(pulse)	Upper exit paper sensor photo transmitter control
	15	EXIT_SENS_K	I	DC0V/3.3V(pulse)	Upper exit paper sensor photo transmitter control
	16	GND	-	-	Ground
	17	EXIT_SENS	I	DC0V/3.3V	Upper exit paper sensor: On/Off
	18	3.3V	O	DC3.3V	DC3.3V power output
	19	-	-	-	Not used
	20	-	-	-	Not used
	21	-	-	-	Not used
	22	-	-	-	Not used
	23	-	-	-	Not used
	24	-	-	-	Not used
	25	-	-	-	Not used
	26	-	-	-	Not used
	27	-	-	-	Not used
	28	EHLD1_SENS_LED	O	DC5V	DC5V power output
	29	GND	-	-	Ground
	30	EHLD1_SENS	I	DC0V/3.3V	Exit paper holding sensor: On/Off
	28	ESPTHP_SENS_LED	O	DC5V	DC5V power output
	29	GND	-	-	Ground
	30	ESPTHP_SENS	I	DC0V/3.3V	Exit support guide HP sensor: On/Off
	28	EPDLHP_SENS_LED	O	DC5V	DC5V power output
	29	GND	-	-	Ground
	30	EPDLHP_SENS	I	DC0V/3.3V	Exit paddle HP sensor: On/Off
YC40	1	ENG_TXD	O	DC0V/3.3V(pulse)	Engine UART communication (transmission)
	2	ENG_RXD	I	DC0V/3.3V(pulse)	Engine UART communication (receive)
	3	GND	-	-	Ground
	4	5VIF	I	DC5V	DC5V power input
YC42	1	EXTIL_SW_24V	O	DC24V	DC24V power output

Connector	Pin	Signal	I/O	Voltage	Description
	2	GND	-	-	Ground
	3	EXTIL_SW	I	DC0V/24V	Exit guider switch: On/Off
	4	GND	-	-	Ground
	5	24V	O	DC24V	DC24V power output
	6	ILSOL_ATT	O	DC0V/24V	Exit switching solenoid drive control
	7	ILSOL_HLD	O	DC0V/24V	Exit switching solenoid drive control
	8	-	-	-	Not used
	9	-	-	-	Not used
	10	-	-	-	Not used

(17)BF PWB (BF-9100)

(17-1)PWB photograph

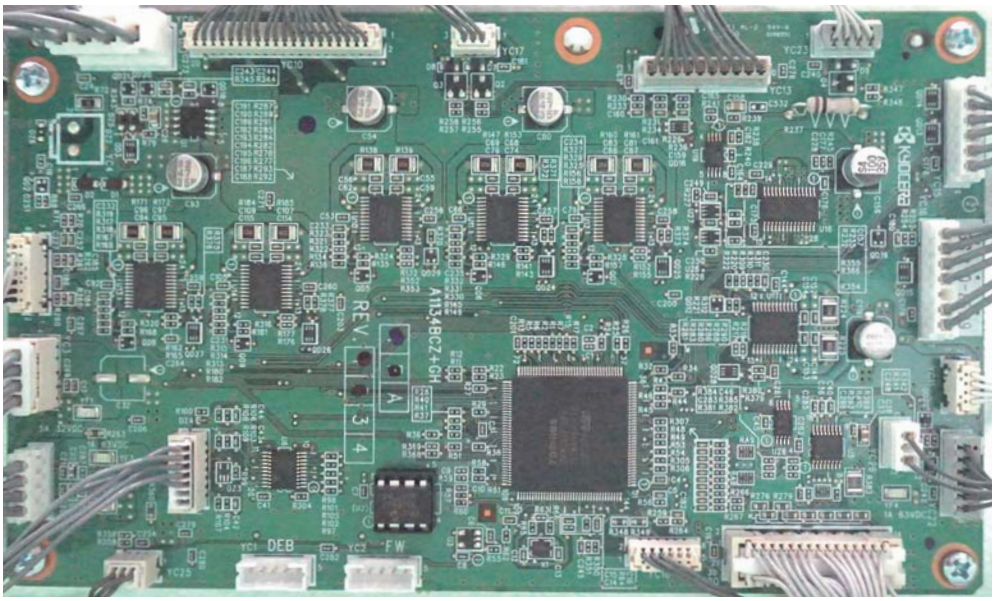

(17-2)Connector position

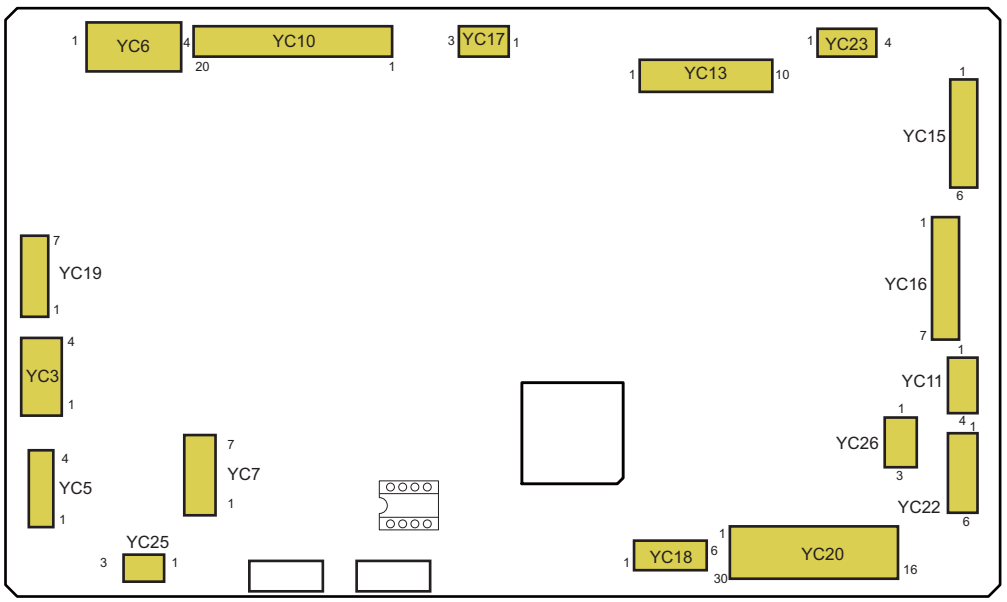

(17-3)Connector lists

Destination

- YC3: DF PWB power
- YC5: DF PWB power
- YC6: Set switch, Tray open/close switch
- YC7: DF PWB communication
- YC10: Adjusting motor 1/2, Side registration motor 1/2, Paper entry motor
- YC11: Paddle motor
- YC13: Staple unit
- YC15: Blade motor
- YC16: Main motor
- YC17: Feedshift solenoid
- YC18: Conveying tray sensor
- YC19: Paper sensor, Paddle sensor
- YC20: Adjusting sensor 1/2, Exit sensor, Vertical conveying sensor, Side registration sensor 1/2, Blade sensor, Paper entry sensor
- YC22: Conveying tray motor
- YC23: Front paper entry fan, Rear paper entry fan
- YC25: Exit pressure release sensor
- YC26: Exit pressure release motor

Connector	Pin	Signal	I/O	Voltage	Description
YC3	1	GND	-	-	Ground
	2	GND	-	-	Ground
	3	24V	I	DC24V	DC24V power input
	4	24V	I	DC24V	DC24V power input
YC5	1	3.3V	I	DC3.3V	DC3.3V power input
	2	GND	-	-	Ground
	3	GND	-	-	Ground
	4	5V	I	DC5V	DC5V power input
YC6	1	24V	O	DC24V	DC24V power output
	2	FRONT COV SIG	I	DC0V/24V	BF set switch: On/Off
	3	24V	O	DC24V	DC24V power output
	4	EJECT COV SIG	I	DC0V/24V	Tray open/close switch: On/Off
YC7	1	GND	-	-	Ground
	2	GND	-	-	Ground
	3	ENG_RDY	O	DC0V/3.3V	Ready signal
	4	ENG_SEL	I	DC0V/3.3V	Select signal
	5	ENG_CLK	I	DC0V/3.3V	Clock signal
	6	ENG_DI	I	DC0V/3.3V	Serial communication data signal input
	7	ENG_DO	O	DC0V/3.3V	Serial communication data signal output
YC10	1	EXTMOT_2B	O	DC0V/24V(pulse)	Adjustment motor 2 control signal
	2	EXTMOT_1B	O	DC0V/24V(pulse)	Adjustment motor 2 control signal

Connector	Pin	Signal	I/O	Voltage	Description
(YC10)	3	EXTMOT_2A	O	DC0V/24V(pulse)	Adjustment motor 2 control signal
	4	EXTMOT_1A	O	DC0V/24V(pulse)	Adjustment motor 2 control signal
	5	MDLMOT_2B	O	DC0V/24V(pulse)	Side registration motor 2 control signal
	6	MDLMOT_1B	O	DC0V/24V(pulse)	Side registration motor 2 control signal
	7	MDLMOT_2A	O	DC0V/24V(pulse)	Side registration motor 2 control signal
	8	MDLMOT_1A	O	DC0V/24V(pulse)	Side registration motor 2 control signal
	9	CINMOT_2B	O	DC0V/24V(pulse)	Paper entry motor control signal
	10	CINMOT_1B	O	DC0V/24V(pulse)	Paper entry motor control signal
	11	CINMOT_2A	O	DC0V/24V(pulse)	Paper entry motor control signal
	12	CINMOT_1A	O	DC0V/24V(pulse)	Paper entry motor control signal
	13	EXCMOT_2B	O	DC0V/24V(pulse)	Adjustment motor 1 control signal
	14	EXCMOT_1B	O	DC0V/24V(pulse)	Adjustment motor 1 control signal
	15	EXCMOT_2A	O	DC0V/24V(pulse)	Adjustment motor 1 control signal
	16	EXCMOT_1A	O	DC0V/24V(pulse)	Adjustment motor 1 control signal
	17	STMMOT_2B	O	DC0V/24V(pulse)	Side registration motor 1 control signal
	18	STMMOT_1B	O	DC0V/24V(pulse)	Side registration motor 1 control signal
	19	STMMOT_2A	O	DC0V/24V(pulse)	Side registration motor 1 control signal
	20	STMMOT_1A	O	DC0V/24V(pulse)	Side registration motor 1 control signal
YC13	1	5V	O	DC5V	DC5V power output
	2	STLS2	I	DC0V/5V	Staple unit LS2 signal
	3	GND	-	-	Ground
	4	STLS1	I	DC0V/5V	Staple unit LS1 signal
	5	STHP	I	DC0V/5V	Staple unit HP signal
	6	STMOT_OUT1	O	DC0V/24V(pulse)	Stapler motor control signal
	7	STMOT_OUT1	O	DC0V/24V(pulse)	Stapler motor control signal
	8	FGND	-	-	Ground
	9	STMOT_OUT2	O	DC0V/24V(pulse)	Stapler motor control signal
	10	STMOT_OUT2	O	DC0V/24V(pulse)	Stapler motor control signal
YC15	1	FLDMOT_BRK	O	DC0V/5V(pulse)	Blade motor control signal
	2	FLDMOT_DIR	O	DC0V/5V(pulse)	Blade motor control signal
	3	FLDMOT_CLK	O	DC0V/5V(pulse)	Blade motor control signal
	4	FLDMOT_EN	O	DC0V/5V(pulse)	Blade motor control signal
	5	GND	-	-	Ground
	6	24V2	O	DC24V	DC24V power output
YC16	1	FLDMOT_DIR	O	DC0V/5V(pulse)	Main motor control signal
	2	FLDMOT_ALM	O	DC0V/5V(pulse)	Main motor control signal
	3	FLDMOT_CLK	O	DC0V/5V(pulse)	Main motor control signal
	4	FLDMOT_EN	O	DC0V/5V(pulse)	Main motor control signal
	5	N.C.	-	-	Not used
	6	GND	-	-	Ground
	7	24V2	O	DC24V	DC24V power output
YC17	1	24V2	O	DC24V	DC24V power output
	2	3FSOL_ATT	O	DC24V	Feedshift solenoid: On/Off (actuate)
	3	3FSOL_HLD	O	DC24V	Feedshift solenoid: On/Off (return)
YC20	1	5V	O	DC5V	DC5V power output
	2	GND	-	-	Ground

Connector	Pin	Signal	I/O	Voltage	Description
(YC20)	3	BDLFT_HP	I	DC0V/3.3V	Adjustment sensor 1: On/Off
	4	5V	O	DC5V	DC5V power output
	5	GND	-	-	Ground
	6	WDL_HP	I	DC0V/3.3V	Side registration sensor 1: On/Off
	7	5V	O	DC5V	DC5V power output
	8	GND	-	-	Ground
	9	FULL	I	DC0V/3.3V	Tray full sensor: On/Off
	10	5V	O	DC5V	DC5V power output
	11	GND	-	-	Ground
	12	OUT	I	DC0V/3.3V	Exit sensor: On/Off
	13	5V	O	DC5V	DC5V power output
	14	GND	-	-	Ground
	15	TRANSPORT	I	DC0V/3.3V	Vertical conveying sensor: On/Off
	16	-	-	-	Not used
	17	-	-	-	Not used
	18	-	-	-	Not used
	19	5V	O	DC5V	DC5V power output
	20	GND	-	-	Ground
	21	WDU_HP	I	DC0V/3.3V	Side registration sensor 2: On/Off
	22	5V	O	DC5V	DC5V power output
	23	GND	-	-	Ground
	24	BLD_HP	I	DC0V/3.3V	Blade sensor: On/Off
	25	GND	-	-	Ground
	26	BULOW_HP	I	DC0V/3.3V	Adjustment sensor 2: On/Off
	27	3.3V	O	DC3.3V	DC3.3V power output
	28	GND	-	-	Ground
	29	CARRY_IN	I	DC0V/3.3V	Paper entry sensor: On/Off
	30	3.3V	O	DC3.3V	DC3.3V power output
YC22	1	FDTRAY_DIR	O	DC0V/5V	Conveying tray motor brake signal
	2	FDTRAY_LD	I	DC0V/3.3V	Conveying tray motor rotation synchronizing signal
	3	FDTRAY_CLK	O	DC0V/5V(pulse)	Conveying tray motor clock signal
	4	FDTRAY_EN	O	DC0V/5V	Conveying tray motor remote signal
	5	GND	-	-	Ground
	6	24V2	O	DC24V	DC24V power output
YC23	1	BF_FAN2	O	DC0V/24V	Booklet FAN drive signal
	2	24V2	O	DC24V	DC24V power output
	3	BF_FAN1	O	DC0V/24V	Booklet FAN drive signal
	4	24V2	O	DC24V	DC24V power output
YC25	1	EXT_RLS_SENS_A	O	DC1.2V	LED power output
	2	GND	-	-	Ground
	3	EXT_RLS_SENS		DC0V/3.3V	Exit pressure release sensor: On/Off
YC26	1	OUT2	O	DC0V/24V	Exit pressure release motor control signal
	2	N.C.	-	-	Ground
	3	OUT1	O	DC0V/24V	Exit pressure release motor control signal

(18)Inserter (IS-7100)

(18-1)PWB photograph

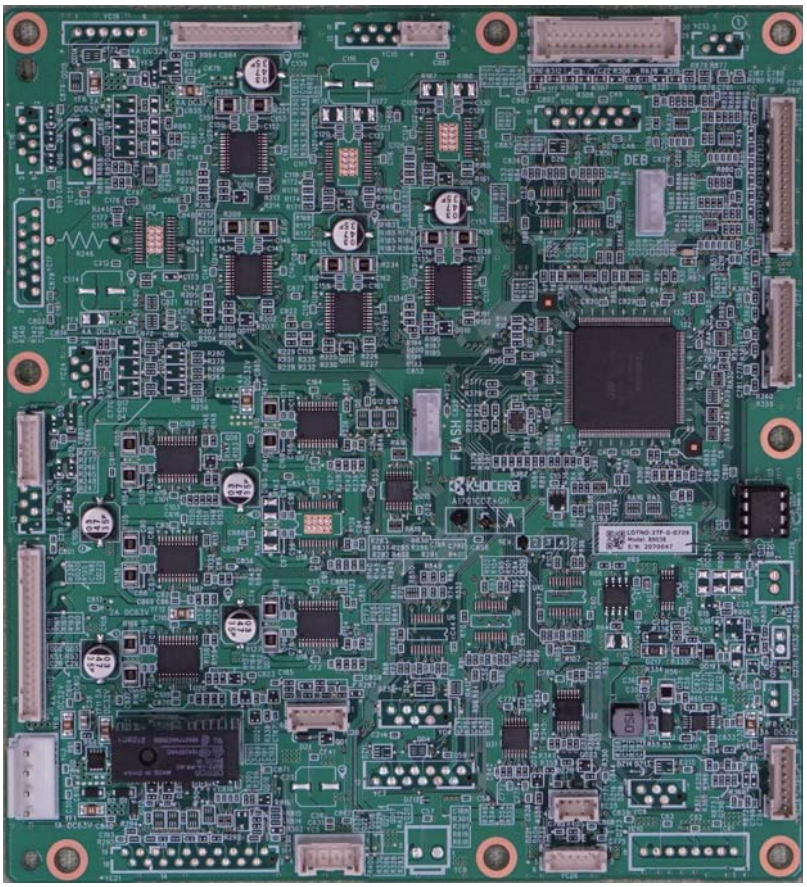

(18-2)Connector position

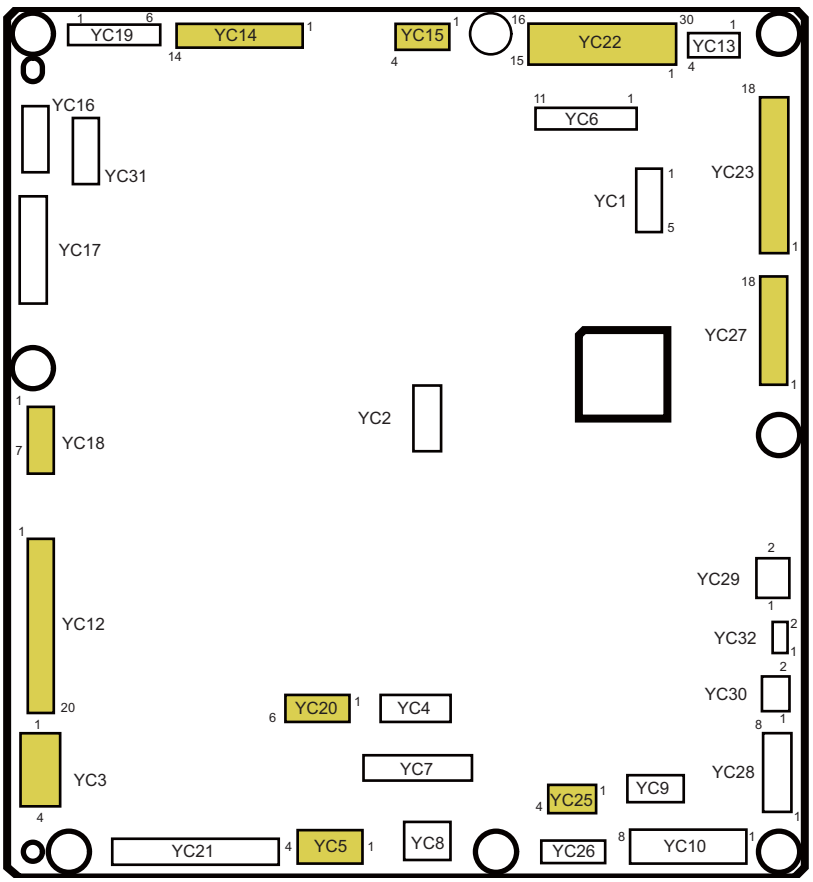

(18-3)Connector lists

Destination

- YC3:IS right cover switch / IS front cover switch
- YC5:Image drive PWB
- YC12:IS confluence conveying motor, IS upper tray paper feed motor, IS lower tray paper feed motor, IS upper tray lift motor
- YC14:IS upper tray registration motor, IS lower tray registration motor, IS conveying motor
- YC15:IS lower tray lift motor
- YC18:IS horizontal conveying motor
- YC20:IS upper tray paper width sensor, IS lower tray paper width sensor
- YC22:IS lower tray paper gauge sensor, IS upper tray paper gauge sensor, IS lower tray registration sensor, IS upper tray registration sensor, IS upper tray lower limit sensor, IS upper tray paper sensor, IS upper tray pickup sensor, IS upper tray paper feed sensor, IS entry sensor
- YC23:IS exit sensor, IS lower tray paper feed sensor, IS lower tray pickup sensor, IS lower tray paper sensor, IS lower tray lower limit sensor, IS confluence conveying sensor
- YC25:Engin PWB
- YC27:IS upper tray paper length sensor, IS lower tray paper length sensor

Connector	Pin	Signal	I/O	Voltage	Description
YC3	1	+24V2	O	DC24V	DC24V power output
	2	FEED_COVER_SIG	I	DC0V/24V	Detection of IS right cover switch / IS front cover switch open/close 24V interlock
	3	FRONT_COVER_SOURCE	O	DC24V	DC24V power output (FEED_COVER_OPEN:OFF)
	4	FRONT_COVER_SIG	I	DC0V/24V	Detection of IS front cover switch 24V interlock
YC5	1	GND	-	-	Ground
	2	GND	-	-	Ground
	3	+24V2	I	DC24V	DC24V power input
	4	+24V2	I	DC24V	DC24V power input
YC12	1	L_VERMOT_B/	O	DC0V/24V(puls)	IS confluence conveying motor control signal
	2	L_VERMOT_A/	O	DC0V/24V(puls)	IS confluence conveying motor control signal
	3	L_VERMOT_B	O	DC0V/24V(puls)	IS confluence conveying motor control signal
	4	L_VERMOT_A	O	DC0V/24V(puls)	IS confluence conveying motor control signal
	5	-	-	-	-
	6	-	-	-	-
	7	-	-	-	-
	8	-	-	-	-
	9	UTRAY_FEEDMOT_A/	O	DC0V/24V(puls)	IS upper tray paper feed motor control signal
	10	UTRAY_FEEDMOT_A	O	DC0V/24V(puls)	IS upper tray paper feed motor control signal

Connector	Pin	Signal	I/O	Voltage	Description
	11	UTRAY_FEEDMOT_B	O	DC0V/24V(puls)	IS upper tray paper feed motor control signal
	12	UTRAY_FEEDMOT_B/	O	DC0V/24V(puls)	IS upper tray paper feed motor control signal
	13	LTRAY_FEEDMOT_A/	O	DC0V/24V(puls)	IS lower tray paper feed motor control signal
	14	LTRAY_FEEDMOT_A	O	DC0V/24V(puls)	IS lower tray paper feed motor control signal
	15	LTRAY_FEEDMOT_B	O	DC0V/24V(puls)	IS lower tray paper feed motor control signal
	16	LTRAY_FEEDMOT_B/	O	DC0V/24V(puls)	IS lower tray paper feed motor control signal
	17	UTRAY_LIFTMOT_B/	O	DC0V/24V(puls)	IS upper tray lift motor control signal
	18	UTRAY_LIFTMOT_A/	O	DC0V/24V(puls)	IS upper tray lift motor control signal
	19	UTRAY_LIFTMOT_B	O	DC0V/24V(puls)	IS upper tray lift motor control signal
	20	UTRAY_LIFTMOT_A	O	DC0V/24V(puls)	IS upper tray lift motor control signal
YC14	1	UTRAY_REGMOT_B/	O	DC0V/24V(puls)	IS upper tray registration motor control signal
	2	UTRAY_REGMOT_A/	O	DC0V/24V(puls)	IS upper tray registration motor control signal
	3	UTRAY_REGMOT_B	O	DC0V/24V(puls)	IS upper tray registration motor control signal
	4	UTRAY_REGMOT_A	O	DC0V/24V(puls)	IS upper tray registration motor control signal
	5	LTRAY_REGMOT_B/	O	DC0V/24V(puls)	IS lower tray registration motor control signal
	6	LTRAY_REGMOT_A/	O	DC0V/24V(puls)	IS lower tray registration motor control signal
	7	LTRAY_REGMOT_B	O	DC0V/24V(puls)	IS lower tray registration motor control signal
	8	LTRAY_REGMOT_A	O	DC0V/24V(puls)	IS lower tray registration motor control signal
	9	U_VERMOT_B/	O	DC0V/24V(puls)	is conveying motor control signal
	10	U_VERMOT_A/	O	DC0V/24V(puls)	is conveying motor control signal
	11	U_VERMOT_B	O	DC0V/24V(puls)	is conveying motor control signal
	12	U_VERMOT_A	O	DC0V/24V(puls)	is conveying motor control signal
	13	-	-	-	-
	14	-	-	-	-
YC15	1	LTRAY_LIFTMOT_B/	O	DC0V/24V(puls)	IS upper tray lift motor control signal
	2	LTRAY_LIFTMOT_A/	O	DC0V/24V(puls)	IS upper tray lift motor control signal
	3	LTRAY_LIFTMOT_B	O	DC0V/24V(puls)	IS upper tray lift motor control signal
	4	LTRAY_LIFTMOT_A	O	DC0V/24V(puls)	IS upper tray lift motor control signal
YC18	1	HORMOT_B/	O	DC0V/24V(puls)	IS horizontal conveying motor control signal
	2	HORMOT_A/	O	DC0V/24V(puls)	IS horizontal conveying motor control signal
	3	HORMOT_B	O	DC0V/24V(puls)	IS horizontal conveying motor control signal
	4	HORMOT_A	O	DC0V/24V(puls)	IS horizontal conveying motor control signal
	5	-	-	-	-

Connector	Pin	Signal	I/O	Voltage	Description
	6	-	-	-	-
	7	-	-	-	-
YC20	1	+3.3V	O	DC3.3V	Power output
	2	GND	-	-	Ground
	3	UTRAY_PAPWID	I	DC0V to 3.3V	IS upper tray paper width sensor
	4	+3.3V	O	DC3.3V	Power output
	5	GND	-	-	Ground
	6	LTRAY_PAPWID	I	DC0V to 3.3V	IS lower tray paper width sensor
YC22	1	GND	-	-	Ground
	2	CARRYIN	I	DC0V/3.3V	IS entry sensor
	3	+3.3V	O	DC3.3V	Power output
	4	+5V2	O	DC5V	Power output
	5	GND	-	-	Ground
	6	UTRAY_FEED	I	DC0V/3.3V	IS upper tray paper feed sensor
	7	UTRAY_UPLMT_LED	O	DC1.2V(5V)	Sensor LED Power output
	8	GND	-	-	Ground
	9	UTRAY_UPLMT	I	DC0V/3.3V	IS upper tray pickup sensor
	10	GND	-	-	Ground
	11	UTRAY_PAPSET	I	DC0V/3.3V	IS upper tray pickup sensor
	12	+3.3V	O	DC3.3V	Power output
	13	UTRAY_LOWLMT_LED	O	DC1.2V(5V)	Sensor LED Power output
	14	GND	-	-	Ground
	15	UTRAY_LOWLMT	I	DC0V/3.3V	IS upper tray lower limit sensor
	16	+5V2	O	DC5V	Power output
	17	GND	-	-	Ground
	18	UTRAY_REG	I	DC0V/3.3V	IS upper tray registration sensor
	19	+5V2	O	DC5V	Power output
	20	GND	-	-	Ground
	21	LTRAY_REG	I	DC0V/3.3V	IS lower tray registration sensor
	22	UTRAY_RAD_LED	O	DC1.2V(5V)	Sensor LED Power output
	23	GND	-	-	Ground
	24	UTRAY_RAD	I	DC0V/3.3V	IS upper tray paper gauge sensor
	25	LTRAY_RAD_LED	O	DC1.2V(5V)	Sensor LED Power output
	26	GND	-	-	Ground
	27	LTRAY_RAD	I	DC0V/3.3V	IS lower tray paper gauge sensor
	28	-	-	-	-
	29	-	-	-	-
	30	-	-	-	-
YC23	1	GND	-	-	Ground
	2	EXIT	I	DC0V/3.3V	IS exit sensor
	3	+3.3V	O	DC3.3V	Power output
	4	+5V2	O	DC5V	Power output
	5	GND	-	-	Ground
	6	LTRAY_FEED	I	DC0V/5V	IS lower tray paper feed sensor
	7	LTRAY_UPLMT_LED	O	DC1.2V(5V)	Sensor LED Power output
	8	GND	-	-	Ground

Connector	Pin	Signal	I/O	Voltage	Description
	9	LTRAY_UPLMT	I	DC0V/3.3V	IS lower tray pickup sensor
	10	+5V2	O	DC5V	Power output
	11	GND	-	-	Ground
	12	LTRAY_PAPSET	I	DC0V/3.3V	IS lower tray paper sensor
	13	LTRAY_LOWLMT_LED	O	DC1.2V(5V)	Sensor LED Power output
	14	GND	-	-	Ground
	15	LTRAY_LOWLMT	I	DC0V/3.3V	IS lower tray lower limit sensor
	16	GND	-	-	Ground
	17	LOW_VER	I	DC0V/3.3V	IS confluence conveying sensor
	18	+3.3V	O	DC3.3V	Power output
YC25	1	SLAVE_TXD	O	DC0V/5V	UART communication data signal output
	2	SLAVE_RXD	I	DC0V/3.3V	UART communication data signal input
	3	GND	-	-	Ground
	4	+5VIF	I	DC5V	DC5V power input
YC27	1	+3.3V	O	DC3.3V	Power output
	2	GND	-	-	Ground
	3	UTRAY_PAPLEN_L	I	DC0V/3.3V	IS upper tray paper length sensor
	4	PAPLEN_PLS	O	DC0V/3.3V(puls)	IS upper tray paper length sensor LED
	5	-	-	-	-
	6	-	-	-	-
	7	-	-	-	-
	8	-	-	-	-
	9	+3.3V	O	DC3.3V	Power output
	10	GND	-	-	Ground
	11	LTRAY_PAPLEN_L	I	DC0V/3.3V	IS lower tray paper length sensor
	12	PAPLEN_PLS	O	DC0V/3.3V(puls)	IS lower tray paper length sensor LED

(19)Z-folding unit (ZF-7100)

(19-1)PWB photograph

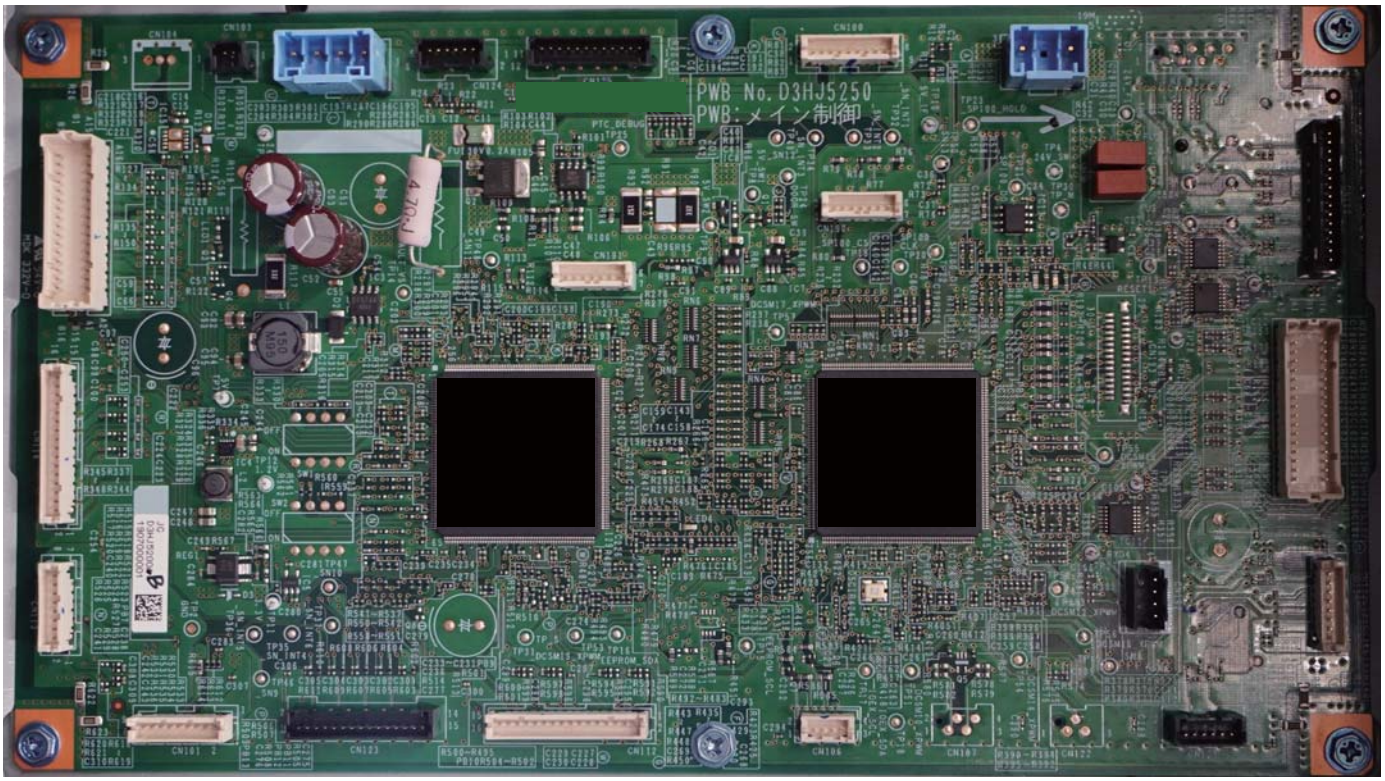

(19-2)Connector position

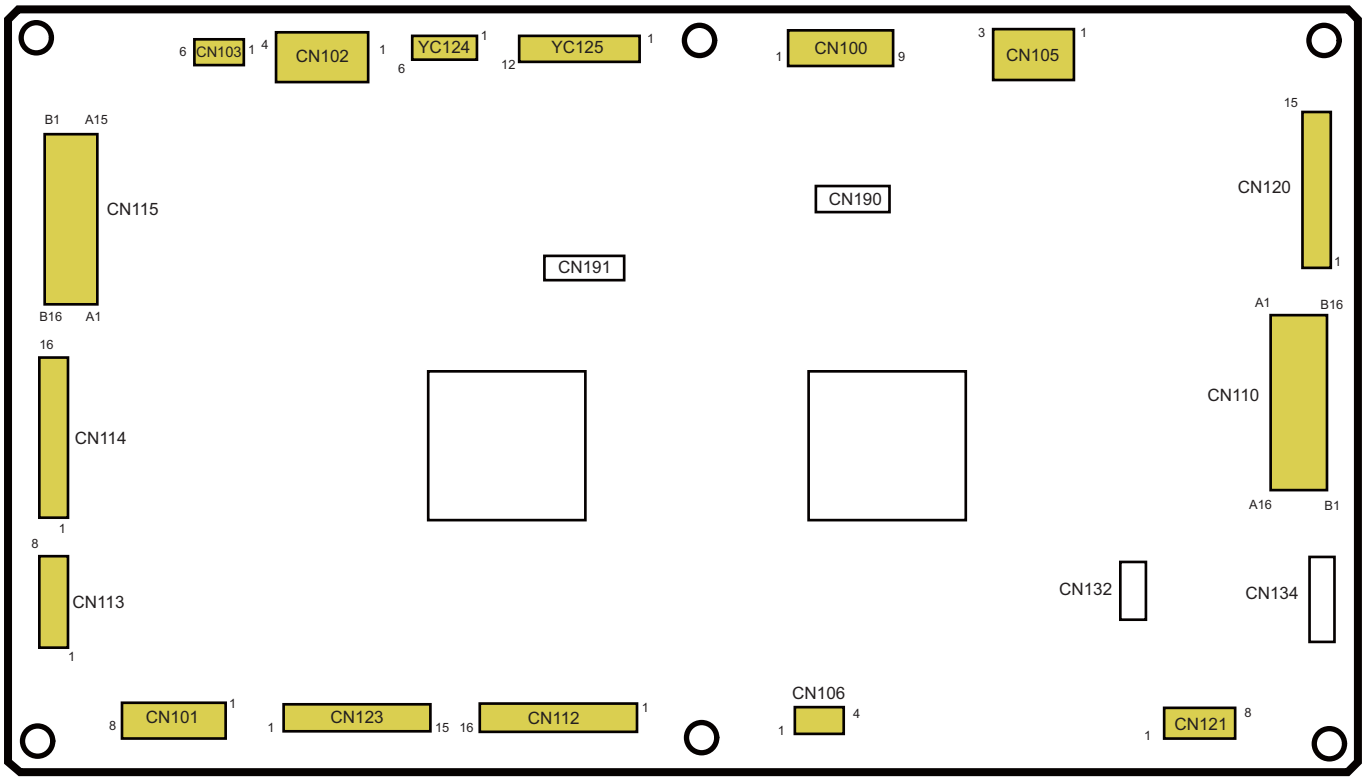

9 Appendixes

9 - 1 Repetitive defects gauge

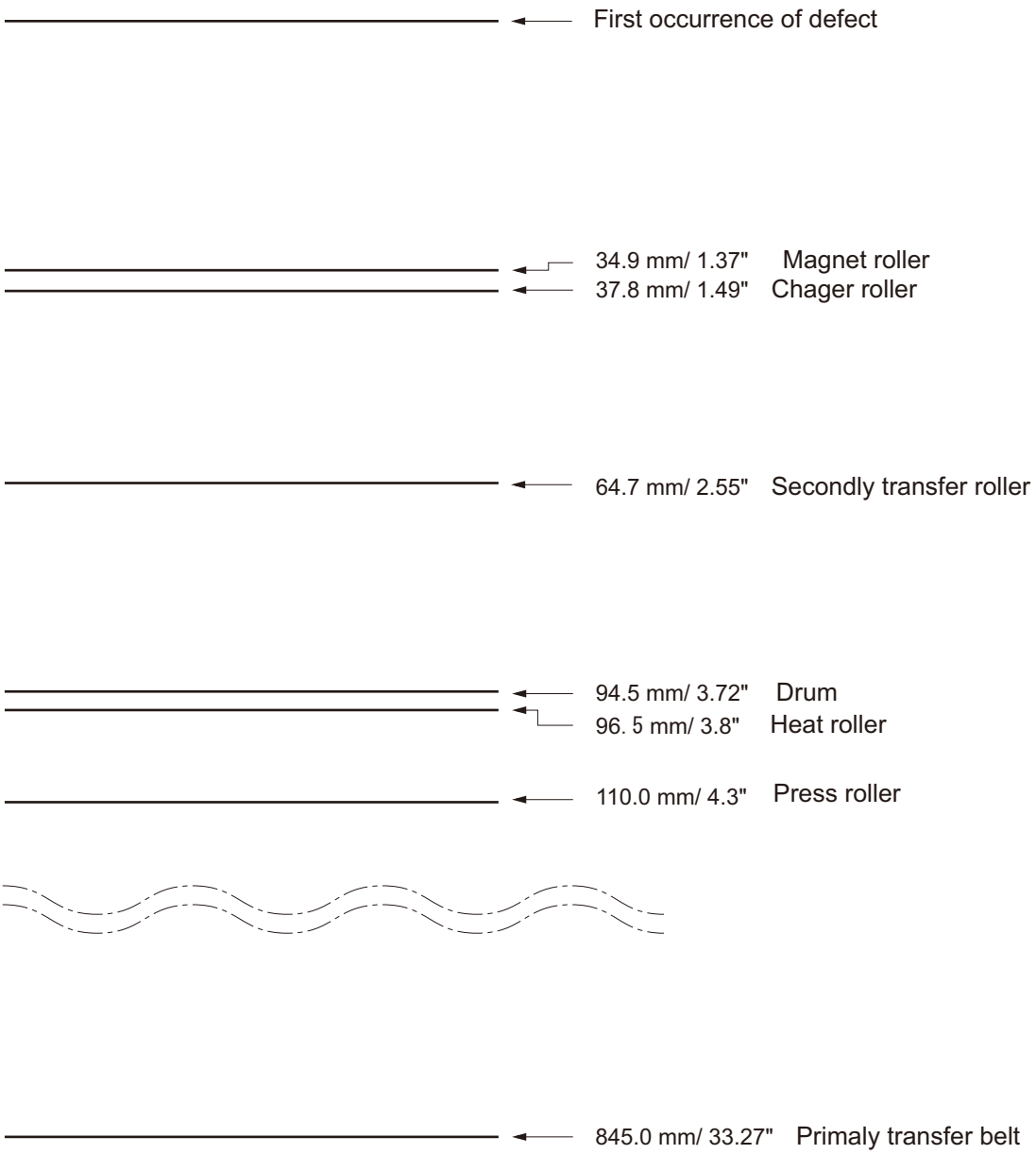

The repetitive marks interval may vary depending on operating conditions.

9 - 2 Firmware environment commands

The printer maintains a number of printing parameters in its memory. These parameters may be changed permanently with the FRPO (Firmware RePrOgram) commands. This section provides information on how to use the FRPO command and its parameters using examples.

Using FRPO commands for reprogramming the firmware

The current settings of the FRPO parameters are listed as the optional values on the service status page.

> **NOTE**
>
> Before changing any FRPO parameters, print out a service status page, so you will know the parametervalues before the changes are made. To return FRPO parameters to their factory default values, send the FRPO INIT (FRPO-INITialize) command.
>
> (!R! FRPO INIT; EXIT;)

The FRPO command is sent to the printer in the following sequence:

!R! FRPO parameter, value; EXIT;

Example: Changing emulation mode to PC-PR201/65A

!R! FRPO P1, 6; EXIT;

FRPO parameters

Items	FRPO	Setting value	Factory setting
Top margin	A1	Integer value in inch	0
	A2	decimal value in 1/100 inch increments	0
Left margin	A3	Integer value in inch	0
	A4	decimal value in 1/100 inch increments	0
Page length	A5	Integer value in inch	17
	A6	decimal value in 1/100 inch increments	30
Page width	A7	Integer value in inch	17
	A8	decimal value in 1/100 inch increments	30
PRESCRIBE compatible mode	B0	0 to 255	0
Default pattern resolution	B8	0: 300 dpi 1: 600 dpi	0
Copy number when turn on	C0	1 to 999	1
Page orientation	C1	0: Portrait 1: Landscape	0
Default font*	C2	Middle two digits of power-up font	0
	C3	Last two digits of power-up font	0
	C5	First two digits of power-up font	0
PCL font switching	C8	0:HP compatible mode 32:Compatibility mode	0
Total host buffer size	H8	0 to 99 in units of the size defined by FRPO S5	5
Form feed time-out value	H9	Value in units of 5 seconds (0 to 99).	6
Reduction (100V model only)	J0	0: 100% 5: 70 % 6: 81 % 7: 86 % 8: 94 % 9: 98 %	0
Auto linefeed mode (100V model only) (Japanese emulation only)	J7	0: Auto linefeed 1: No auto linefeed	0
Horizontal offset (100V model only)*	K0	-7 to +7 (Integer), unit: cm	0
	K1	-99 to +99 (Decimal), unit: 1/100 cm	0
Vertical offset (100V model only)*	K2	-7 to +7 (Integer), unit: cm	0
	K3	-99 to +99 (Decimal), unit: 1/100 cm	0
Kanji font number setting (100V model only)	K4	0: Same as V7 1: Mincho 40 dots 2: Gothic 40 dots 5: Mincho 48 dots 6: Gothic 48 dots	0
New/old JIS code switching (100V model only)	K6	0: JIS X 0208: 1990 1: JIS X 0208: 1978 8: JIS X 0213: 2004	0
KIR mode	N0	0:OFF 2:ON	2

Items	FRPO	Setting value	Factory setting
Duplex printing mode selection	N4	0: OFF 1: Long-edge mode (long-edge bind) 2: Short-edge mode (Short-edge bind)	0
Sleep timer time-out time	N5	1 to 120 minutes, 1 to 60 minutes (25 ppm model)	10
Eco Print mode	N6	0:OFF 2:ON	0
Resolution	N8	0: 300dpi 1: 600dpi 3: 1200dpi	1
Default emulation mode	P1	6 : PCL6 (except PCL XL) 9 : KPDL	6 9 (120V)
Carriage-return action	P2	0: Ignores 0x0d 1: CR 2: CR+LF	1
Linefeed action	P3	0: Ignores 0x0d 1: LF 2: CR+LF	1
KPDL auto switching	P4	0: None 1: Auto switching	0 1 (120V)
KPDL auto switching alternate emulation	P5	Same as P1 (except 9)	6
AES option **Page exit command and action when automatic emulation switching (AES) is triggered**	P7	If the data is neither applicable to KPDL nor alternate emulation after the AES is started, it is processed in the alternate emulation . 0: All page exit commands 1: None 2: All page exit commands and Prescribe EXIT command 3: Prescribe EXIT command only 4: ^L command only 6: Prescribe EXIT command and ^L command If the data is neither applicable to KPDL nor alternate emulation after the AES is started, it is processed in KPDL. 10: Data other than KPDL print data is printed in the alternate emulation.	10 11 (120V)
Command recognition character	P9	ASCII code of 33 to 126	82(R)
Stacker setting at start-up	R0	1: Inner tray 3: When the 1000-sheet finisher is installed 7: When the 4000-sheet finisher is installed	1

Items	FRPO	Setting value	Factory setting
Paper size(start-up)	R2	0: Size of the default paper cassette (See R4.) 1: Envelope Monarch 2: Envelope #10 3: Envelope DL 4: Envelope C5 5: Executive 6: Letter 7: Legal 8: ISO A4 9: JIS B5 10: ISO A3 11: JIS B4 12: Ledger 13: ISO A5 14: ISO A6 15: JIS B6 16: Envelope #9 17: Envelope #6-3/4 18: ISO B5 19: Custom 30: C4 31: Hagaki 32: Oufuku Hagaki 33: Oficio II 38: 12x18 39: 8K 40: 16K 42: 8.5x13.5 50: Statement 51: Folio 52: Youkei type 2 53: Youkei type 4	
Default paper source	R4	0: MP paper feed section 1: Cassette 1 2: Cassette 2 3: Cassette 3 4: Cassette 4 5: Cassette 5	1
Sort pin full detection	S3	0: Stop at paper full detection 1: Output tray change at paper full detection	0
A4/Letter override	S4	0: OFF 1: ON	1
Host buffer size rate (H8 value and integration)	S5	0: 10KB 1: 100KB 2: 1MB	1
Wide A4	T6	0: OFF 1: ON	0
Line spacing	U0	Lines per inch (integer value)	6
	U1	Lines per inch (fraction value)	0

Items	FRPO	Setting value	Factory setting
Character spacing	U2	Characters per inch (integer value)	10
	U3	Characters per inch (fraction value)	0
Country code of the resident fonts	U6	0: US 1: France 2: Germany 3: U.K. 4: Denmark 5: Sweden 6: Italy 7: Spain 8: Japan 9: US legal 10: IBM PC-850 (Multi-lingual) 11: IBM PC-860 (Portuguese) 12: IBM PC-863 (Canadian French) 13: IBM PC-865 (Norwegian) 14: Norway 15: Denmark 2 16: Spain 2 17: Latin America	41
Supported symbol sets	U7	0: Same as the default emulation mode (P1) 1: IBM 6: PCL	53
Default font pitch*	U8	Default font pitch/integer	10
	U9	Default font pitch/decimal	0
ANK outline font size at start-up*	V0	Integer value of ANK outline font size at power-up Upper 2-digit/valid value: 00 to 09	0
	V1	Integer value of ANK outline font size at power-up Lower 2-digit/valid value: 00 to 99	12
	V2	Decimal value of ANK outline font size at power-up Valid value: 00, 25, 50, 75	0
ANK outline font name at start-up*	V3	ANK outline font name at power-up	Courier
Initial Kanji outline font size (100 V model only)*	V4	Upper 2-digit integer value of Kanji outline font size at start-up Valid value range: 00 to 09	0
	V5	2-digit integer value of the Kanji outline font size at start-up Valid value range: 00 to 99	10
	V6	2-digit decimal value of the Kanji outline font size at start-up Valid value: 00, 25, 50, 75	0
Initial Kanji outline font name (100V model only)*	V7	Kanji outline font name at start-up	MTHSMINCHO-W3

Items	FRPO	Setting value	Factory setting
Default weight(courier and letter Gothic)	V9	0: Courier = darkness Letter Gothic = darkness 1: Courier = regular Letter Gothic = darkness 4: Courier = darkness Letter Gothic = regular 5: Courier = regular Letter Gothic = regular	5
Color mode	W1	0: BW 1: Color (CMYK color)	1
Gloss mode	W6	0: OFF 1: ON	0
Paper type for the MP tray	X0	1: Plain 2: Transparency 3: Preprinted 4: Labels 5: Bond 6: Recycled 7: Vellum 8: Rough 9: Letterhead 10: Color 11: Prepunched 12: Envelope 13: Hagaki 14: Coated 16: Thick 17: High quality 18: Index Tab 21 to 28: Custom 1 to Custom 8	1
Paper type (Paper cassettes 1 and 2)	X1 X2	1: Plain 3: Preprinted 5: Bond 6: Recycled 7: Vellum 8: Rough 9: Letterhead 10: Color 11: Prepunched 12: Envelope 16: Thick 17: High quality 21 to 28: Custom 1 to Custom 8	1

Items	FRPO	Setting value	Factory setting
Paper type **(Option paper cassette 3 to 5)**	X3 X4 X5	1: Plain 3: Preprinted 5: Bond 6: Recycled 7: Vellum 8: Rough 9: Letterhead 10: Color 11: Prepunched 12: Envelope (PF-7140 only) 13: Hagaki (PF-7140 only) 16: Thick 17: High quality 21 to 28: Custom 1 to Custom 8	1
Cassette selection mode (PCL)	X9	0: Paper selection depending on an escape sequence compatible with HP-LJ5Si 2: Paper selection depending on an escape sequence compatible with HP-LJ8000	0
Auto error clear at an error	Y0	0:OFF 1:ON	0
Auto error clear timeout time	Y1	Value in units of 5 seconds (0 to 99).	6
Paper error detection at duplex printing **Paper size and type error detection at fixed paper source**	Y3	0: Not detected 255: Detected	255
Forced duplex printing setting **(Media type is Preprinted, Prepunched and Letterhead only)**	Y4	0:OFF 1:ON	0
PDF direct printing	Y5	0: Enlarge and reduce according to the printable area of the paper 1: Loads paper which is the same size as the image 2: Select from Letter, A4, or A3 by specifying the paper size in PDF, and scale according to the printable area of the paper. 3: Print from Letter, A4, A3 by specifying the paper size in PDF 8: Printed in full magnification 9: Select from Letter, A4, Legal, Ledger by specifying the paper size in PDF 10: Select from Letter, A4, Legal, and Ledger by specifying the paper size in PDF, and enlarge or reduce according to the printable area of the paper. 13: Scale according to the paper bridge 14: Print the image in the center with the same size 15: Enlargement/reduction (maximization) according to the print area of the paper 16 to 99: Same operation as the initial value (0)	0
Job box error control	Y6	0: No error control 1: Output the error list 2: Displays the error 3: Displays the error and prints the error report	3

*: Ignored depending on emulation

9 - 3 Chart of image adjustment procedures

Adjusting order	Item	Image	Maintenance mode		Page	Setting procedure		Remarks
			Item No.	Mode		Method	Setting	
1	Adjusting the center line of the MP tray (Adjustment of writing) Changes the LSU writing start timing.	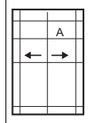	U034	LSU Out Left	P.6-51	1 Press the Start key. 2 Select the adjustment content. [LSU Out Left]-[MPT] 3 Press the System Menu key. 4 Press the Start key. (Test pattern output) 5 Press the System Menu key. 6 Execute the adjustment.	1 By using the [Left/Right],[+/-] cursor or the numeric keys, change the setting value. 2 Press the Start key to set the setting value. 3 Press the [Stop] key.	*When the setting value is increased, the image moves rightward. *When adjusting for the duplex copy, select [Duplex].
2	Adjusting the center line of the cassettes (Adjustment of writing) Changes the LSU writing start timing.	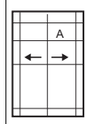	U034	LSU Out Left	P.6-51	1 Press the Start key. 2 Select the adjustment content. [LSU Out Left]-[Cassette1] to [Cassette5] 3 Press the System Menu key. 4 Press the Start key. (Test pattern output) 5 Press the System Menu key. 6 Execute the adjustment.	1 By using the [Left/Right],[+/-] cursor or the numeric keys, change the setting value. 2 Press the Start key to set the setting value. 3 Press the [Stop] key.	*When the setting value is increased, the image moves rightward. *When adjusting for the duplex copy, select [Duplex].
3	Adjusting the leading edge registration of the MP tray (Adjustment of writing) Changes the secondary paper feed timing.	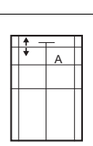	U034	LSU Out Top	P.6-51	1 Press the Start key. 2 Select the adjustment content. [LSU Out Top]-[MPT(L)] 3 Press the System Menu key. 4 Press the Start key. (Test pattern output) 5 Press the System Menu key. 6 Execute the adjustment.	1 By using the [Left/Right],[+/-] cursor or the numeric keys, change the setting value. 2 Press the Start key to set the setting value. 3 Press the [Stop] key.	*When the setting value is increased, the image moves downward. *When adjusting for the duplex copy, select [Duplex].
4	Adjusting the leading edge registration of the cassette (Adjustment of writing) Changes the secondary paper feed timing.	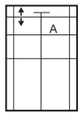	U034	LSU Out Top	P.6-51	1 Press the Start key. 2 Select the adjustment content. [LSU Out Top]-[Cassette(L)] 3 Press the System Menu key. 4 Press the Start key. (Test pattern output) 5 Press the System Menu key. 6 Execute the adjustment.	1 By using the [Left/Right],[+/-] cursor or the numeric keys, change the setting value. 2 Press the Start key to set the setting value. 3 Press the [Stop] key.	*When the setting value is increased, the image moves downward. *When adjusting for the duplex copy, select [Duplex].

Adjusting order	Item	Image	Maintenance mode		Page	Setting procedure		Remarks
			Item No.	Mode		Method	Setting	
5	Adjusting the leading edge margin (Adjustment of writing) Changes the LSU illumination start timing.	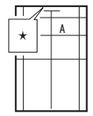	U402	Lead	P.6-241	1 Press the Start key. 2 Select the adjustment content. [Lead] 3 Press the System Menu key. 4 Press the Start key. (Test pattern output) 5 Press the System Menu key. 6 Execute the adjustment.	1 By using the [Left/Right],[+/-] cursor or the numeric keys, change the setting value. 2 Press the Start key to set the setting value. 3 Press the [Stop] key.	*When the setting value is increased, the image get longer.
6	Adjusting the trailing edge margin (Adjustment of writing) Changes the LSU illumination end timing.	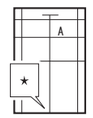	U402	Trail	P.6-241	1 Press the Start key. 2 Select the adjustment content. [Trail] 3 Press the System Menu key. 4 Press the Start key. (Test pattern output) 5 Press the System Menu key. 6 Execute the adjustment.	1 By using the [Left/Right],[+/-] cursor or the numeric keys, change the setting value. 2 Press the Start key to set the setting value. 3 Press the [Stop] key.	*When the setting value is increased, the margin get larger.
7	Adjusting the left and right margins (Adjustment of writing) Changes the LSU illumination start/ end timing.		U402	A Margin C Margin	P.6-241	1 Press the Start key. 2 Select the adjustment content. Select [A Margin] or [C Margin]. 3 Press the System Menu key. 4 Press the Start key. (Test pattern output) 5 Press the System Menu key. 6 Execute the adjustment.	1 By using the [Left/Right],[+/-] cursor or the numeric keys, change the setting value. 2 Press the Start key to set the setting value. 3 Press the [Stop] key.	*When the setting value is increased, the image get longer.
8	Adjusting magnification of the scanner in the main scanning direction (scanning adjustment) Processes data.	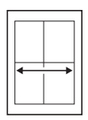	U065 (original:	Main Scan Test copy)	P.6-71	1 Press the Start key. 2 Select the adjustment content. [Main Scan] 3 Press the System Menu key. 4 Place an original and press the Start key. (Test copy output) 5 Press the System Menu key. 6 Execute the adjustment.	1 By using the [Left/Right],[+/-] cursor or the numeric keys, change the setting value. 2 Press the Start key to set the setting value. 3 Press the [Stop] key.	U065: When using on the contact glass *When the setting value is increased, the image get larger.

Adjusting order	Item	Image	Maintenance mode		Page	Setting procedure		Remarks
			Item No.	Mode		Method	Setting	
9	Adjusting magnification of the scanner in the sub scanning direction (scanning adjustment) Changes the original scanning speed.	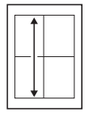	U065 U070	Sub Scan Sub Scan(F) Sub Scan(B) Sub Scan(CIS)	P.6-71 P.6-76	1 Press the Start key. 2 Select the adjustment content. U065: [Sub Scan] U070: [Sub Scan(F)], [Sub Scan(B)] or [Sub Scan(CIS)] 3 Press the System Menu key. 4 Place an original and press the Start key. (Test copy output) 5 Press the System Menu key. 6 Execute the adjustment.	1 By using the [Left/Right],[+/-] cursor or the numeric keys, change the setting value. 2 Press the Start key to set the setting value. 3 Press the [Stop] key.	U065: When using on the contact glass *When the setting value is increased, the image get larger. U070: When using document processor *When the setting value is increased, the image get longer.
10	Adjusting the center line (scanning adjustment) Scan data is processed.	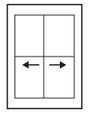	U067 U072	Front Front Back CIS	P.6-74 P.6-79	1 Press the Start key. 2 Select the adjustment content. U067: [Front] U072: [Front], [Back] or [CIS] 3 Press the System Menu key. 4 Place an original and press the Start key. (Test copy output) 5 Press the System Menu key. 6 Execute the adjustment.	1 By using the [Left/Right],[+/-] cursor or the numeric keys, change the setting value. 2 Press the Start key to set the setting value. 3 Press the [Stop] key.	U067: When using on the contact glass *When the setting value is increased, the image moves leftward. U072: When using document processor *Back adjustment selects [Back] at the time of duplex mode. *When the setting value is increased, the image moves rightward.
11	Adjusting the leading edge registration (scanning adjustment) Changes the original scan start timing.	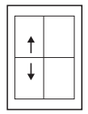	U066 U071	Front Front Head Back Head	P.6-73 P.6-77	1 Press the Start key. 2 Press the System Menu key. 3 Place an original and press the Start key. (Test copy output) 4 Press the System Menu key. 5 Select the adjustment content. U066: [Front] U071: [Front Head] or [Back Head]	1 By using the [Left/Right],[+/-] cursor or the numeric keys, change the setting value. 2 Press the Start key to set the setting value. 3 Press the [Stop] key.	U066: When using on the contact glass *When the setting value is increased, the image moves forward. U071: When using document processor *Back adjustment selects [Back Head] at the time of duplex mode. *When the setting value is increased, the image moves forward.

Image quality

Items	Specifications
100% magnification	Printer: ±0.8% Copy: ±1.5% Using DP: ±2.0%
Magnification	Copy: ±2.0% Using DP: ±2.5%
Lateral squareness	Copy: ±2.0mm/200mm Using DP: ±2.5mm/200mm
Leading edge timing	Print: 2.0 mm or less Copy: 2.0mm or less Using DP: 2.5mm or less

Items	Specifications
Skewed paper feed (left-right difference)	Print: 1.0mm /100mm or less Copy: 1.0mm /100mm or less (table) 1.5mm /100mm or less (DP)
Lateral image shifting	Print: ±2.0mm or less (cassette)±3.0mm or less (MP tray) Copy: ±2.0mm or less (cassette)±3.0mm or less (MP tray) Using DP: ±2.0mm or less (cassette)±3.0mm or less (MP tray)

When maintenance item U411 (Automatic adjustment in the scanner) is run using the specified original (P/N 7505000005), the following adjustments are automatically made:

- Scanner magnification adjustment in the sub scanning direction (U065)
- Adjusts the scanner leading edge registration (U066)
- Adjusting the scanner center line (U067)
- Chromatic aberration in the main scanning direction
- Chromatic aberration in the sub scanning direction
- MTF correction
- Input gamma in color mode
- Color correction matrix
- Input gamma in monochrome mode

When maintenance item U411 (Automatic adjustment in the scanner) is run using the specified original (P/N 302AC68243), the following adjustments are automatically made:

In case of running this test chart, clean the feed rollers with alcohol in advance and ensure the DP width guides are correctly positioned against the original.
Adjusting the DP sub scanning magnification (U070)

- Adjusting the DP leading edge registration (U071)
- Adjusting the DP center line (U072)
- Adjusting the DP trailing edge registration (U071)

When maintenance item U411 (Automatic adjustment in the scanner: DP Auto Adj) is run using the printed out test chart, the following adjustments are automatically made:

- Adjusting the DP sub scanning magnification (U070)
- Adjusting the DP leading edge registration (U071)
- Adjusting the DP center line (U072)

- Adjusting the DP trailing edge registration (U071)

Adjusting order	Item	Image	Setting procedure		Remarks
12	Skew image adjustment (diagonal to the main scan direction) (scanning adjustment) Adjust the height of the scanner unit.	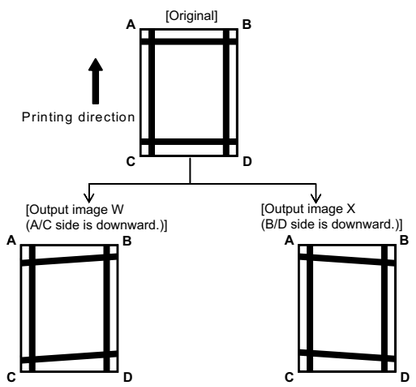	1 Remove two screws (a) (M3x8). 2 Remove rib (c) at front side and remove upper right cover (b) in the direction of the arrow. 3 Remove the screw (e) that fixes the ISU adjustment plate (d). 4 Shift the ISU adjustment plate (d) in the adjustment direction. 5 Estimate amount of movement: Sliding the ISU adjustment plate (d) changes the horizontal lines 0.26 mm on the A/C side and 0.25 mm on the B/D side. 6 In case that horizontal line goes down to A/C side (Copy image A) ->Shift ISU adjustment plate (d) in the direction (X). 7 In case that horizontal line goes down to B/D side (Copy image B) ->Raise the ISU adjustment plate (d) by shifting it in the direction of the arrow Y. 8 Tighten the screw (e) after the adjustment is completed. 9 Attach upper right cover (b) to the main	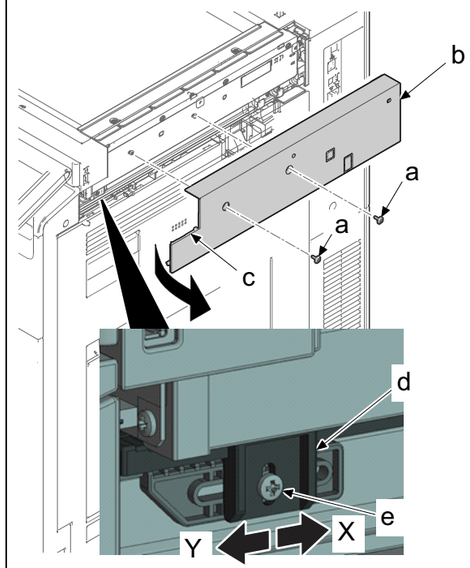	

9 - 4 Wiring diagram

(1)Engine PWB/Feed drive PWB and High voltage PWB



(2)Laser scanner and Waste toner box

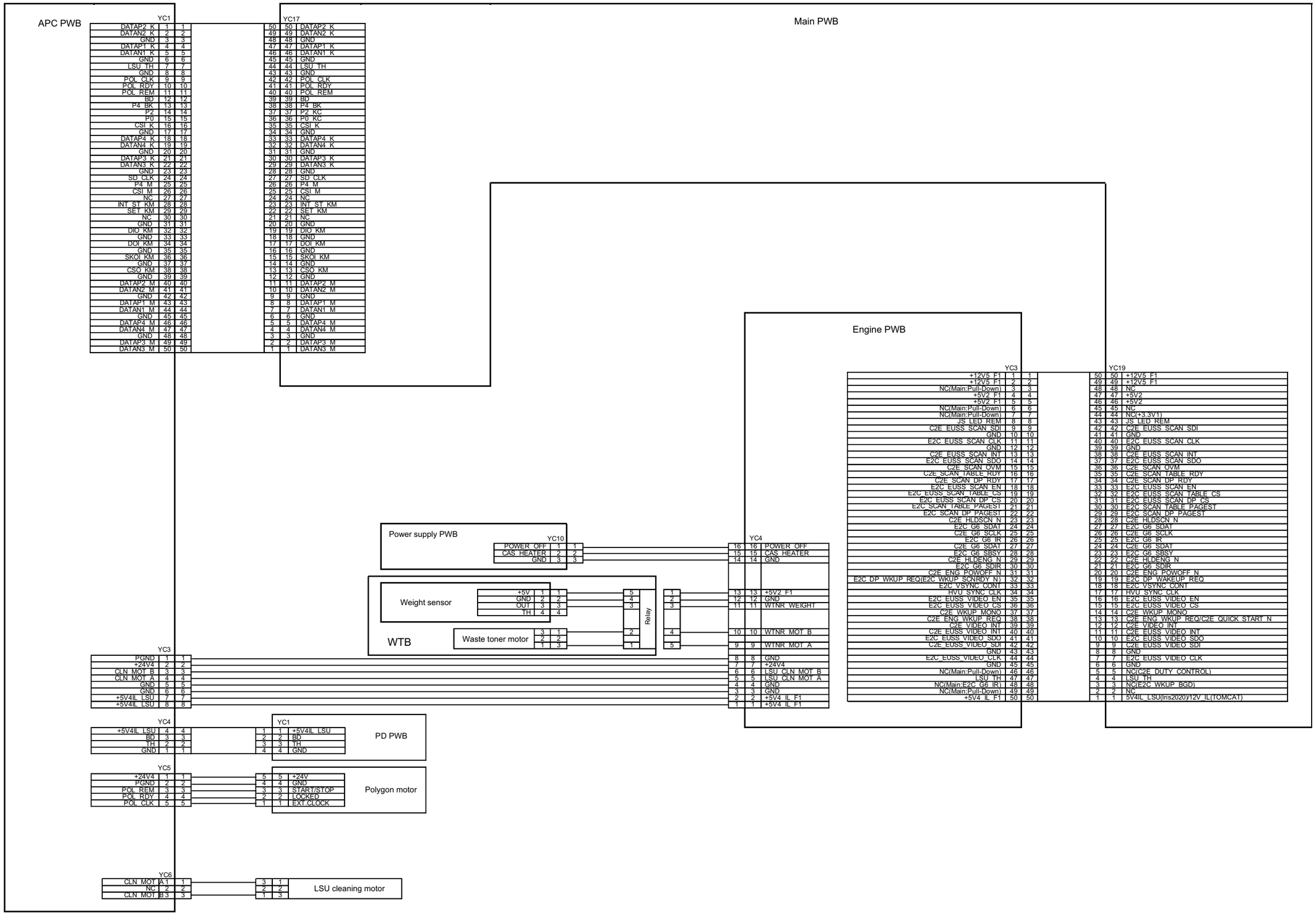

(3)Image drive PWB1

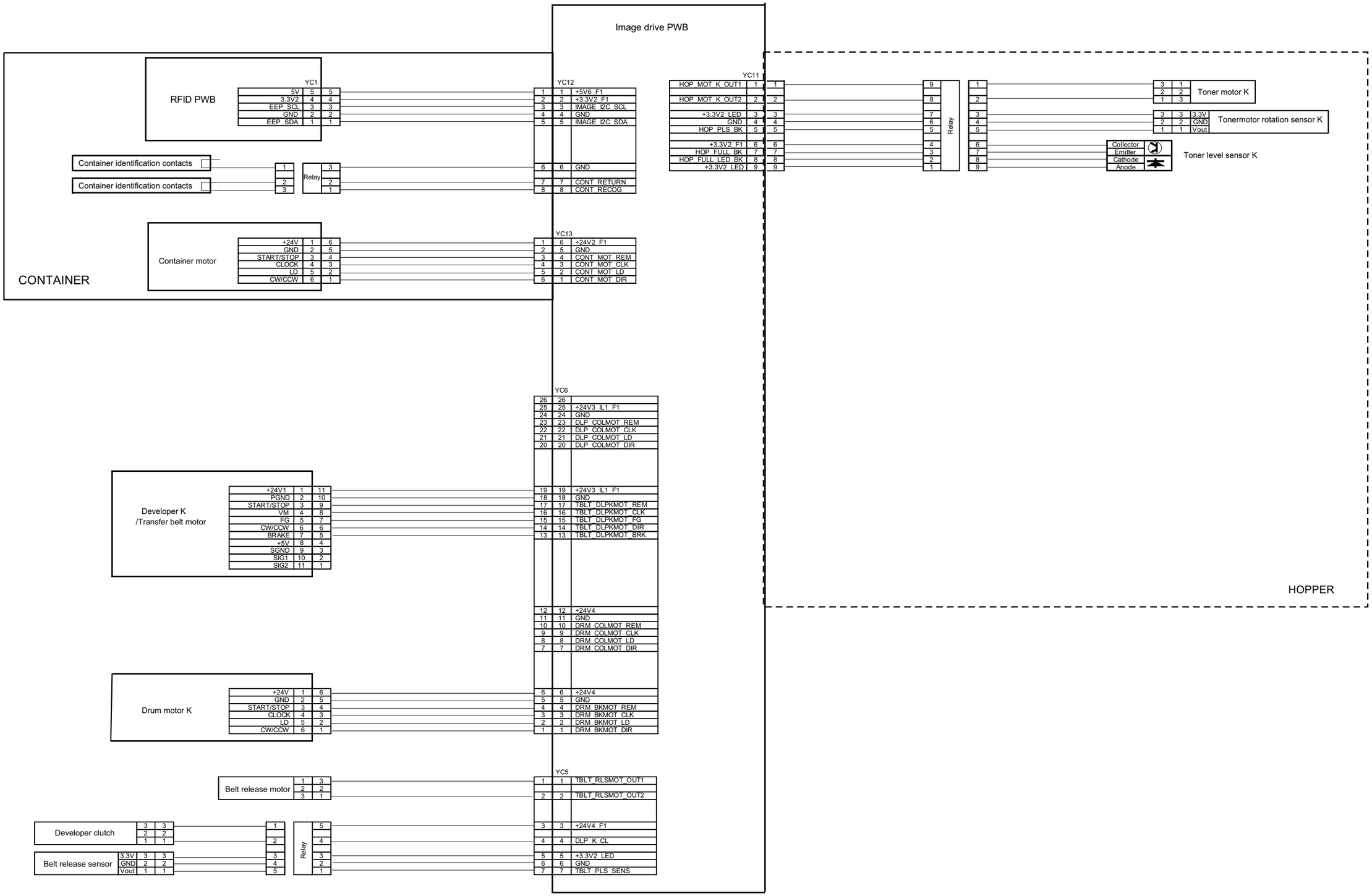

(4)Image drive PWB 2 (60 ppm / 70 ppm model)

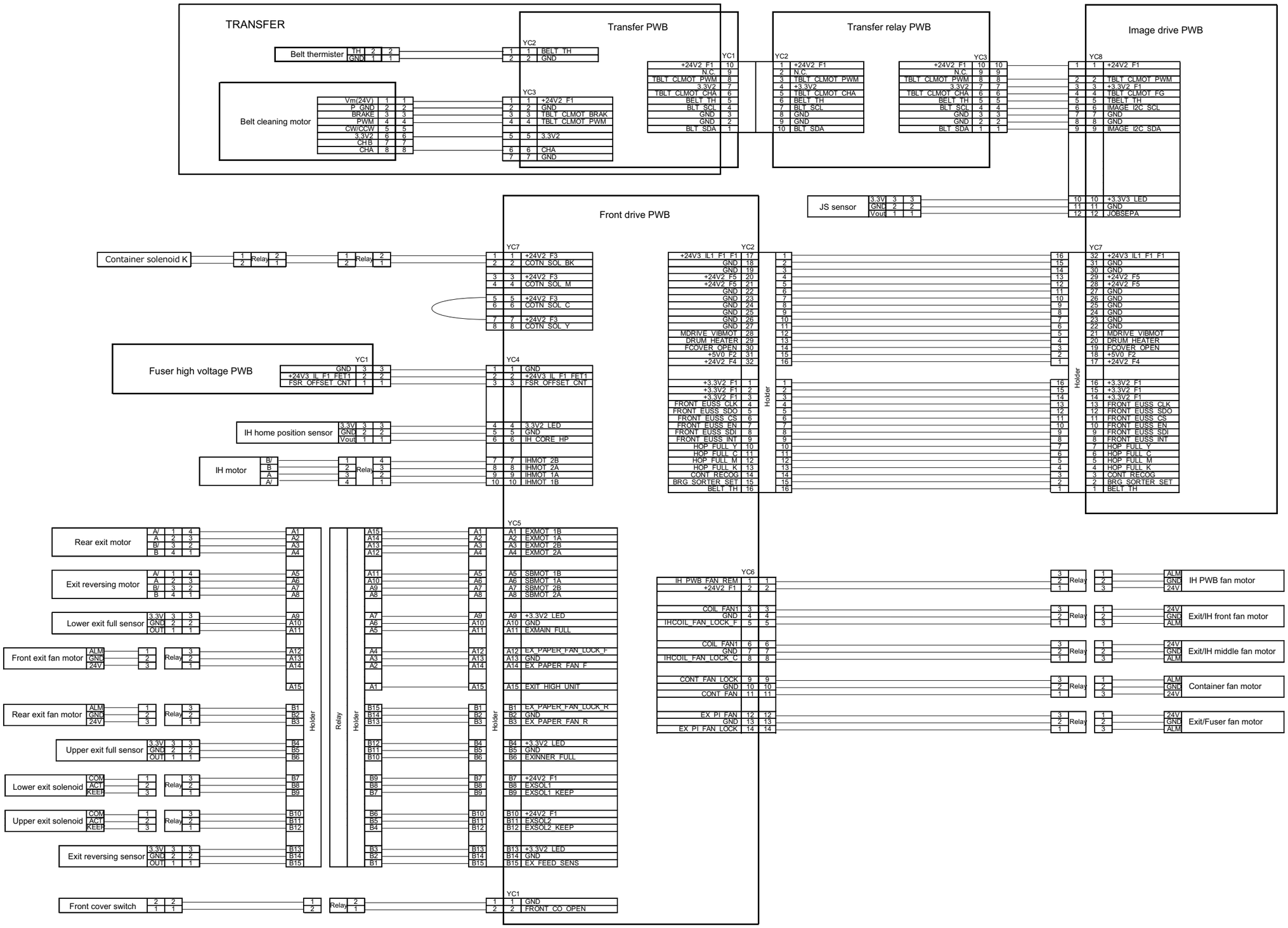

[CONFIDENTIAL]

(5)Image drive PWB 2 (40 ppm/50 ppm model)

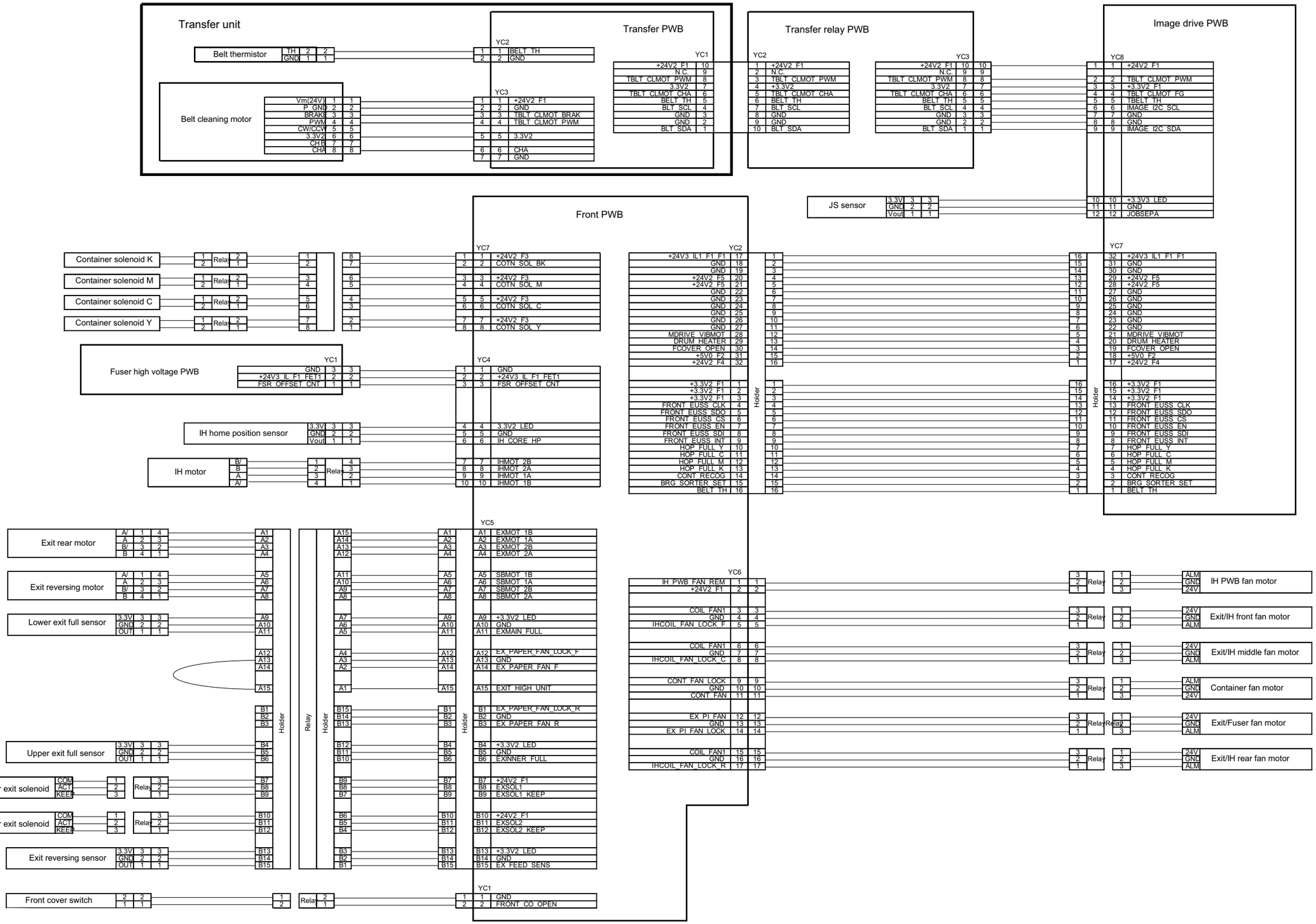

(6)Feed drive PWB 1

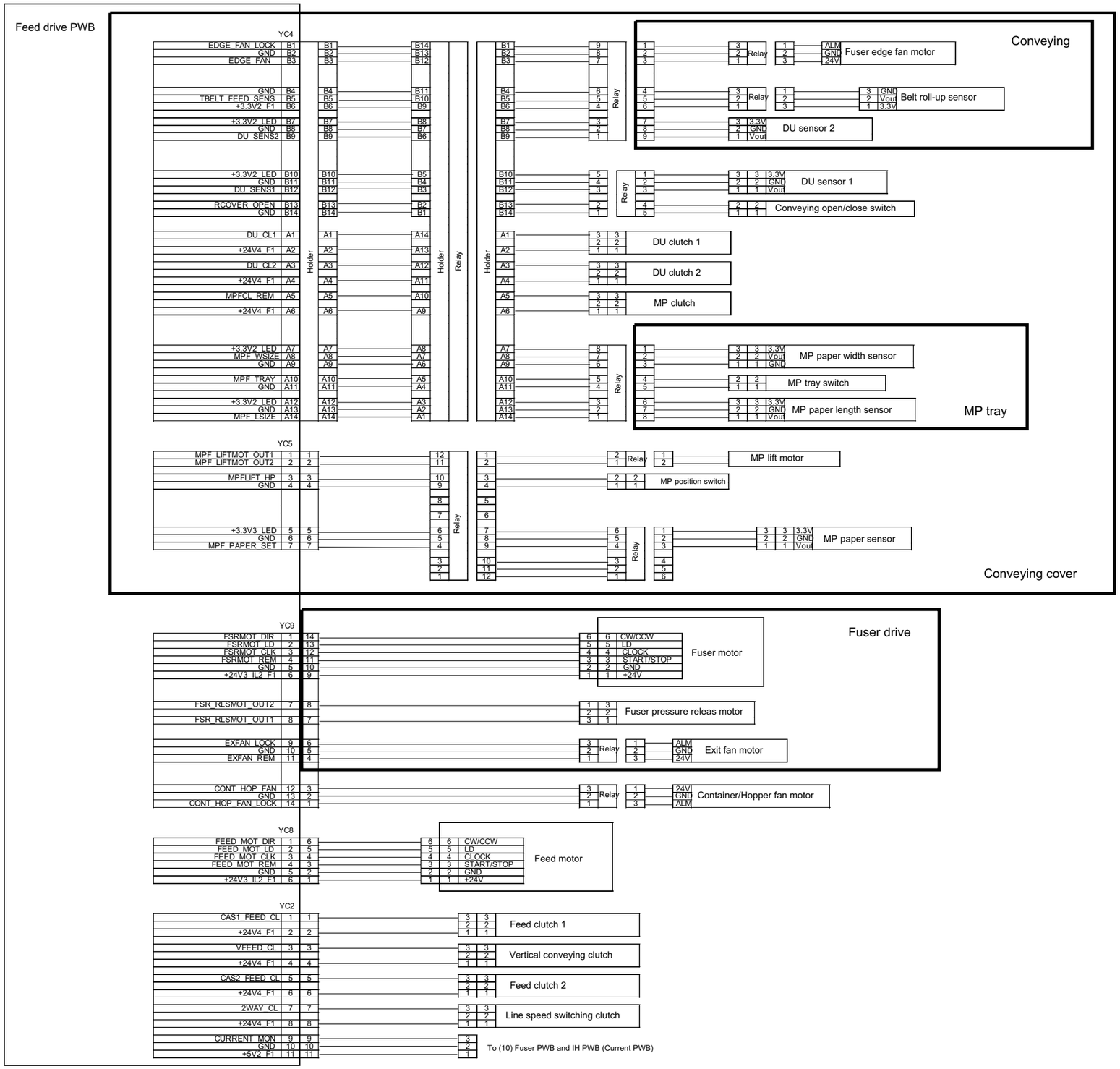

(7)Feed drive PWB 2

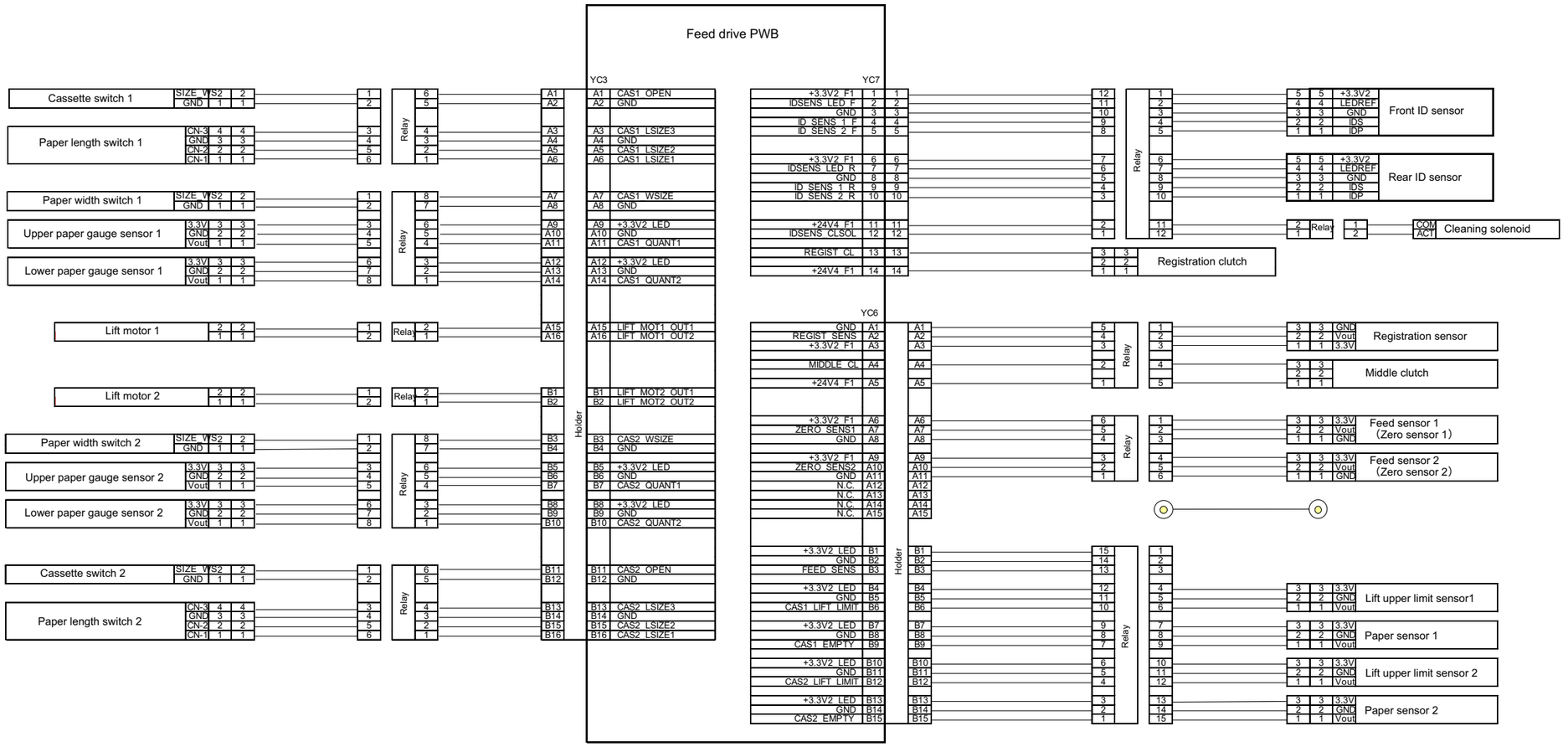

(8)Drum/Developer relay PWB

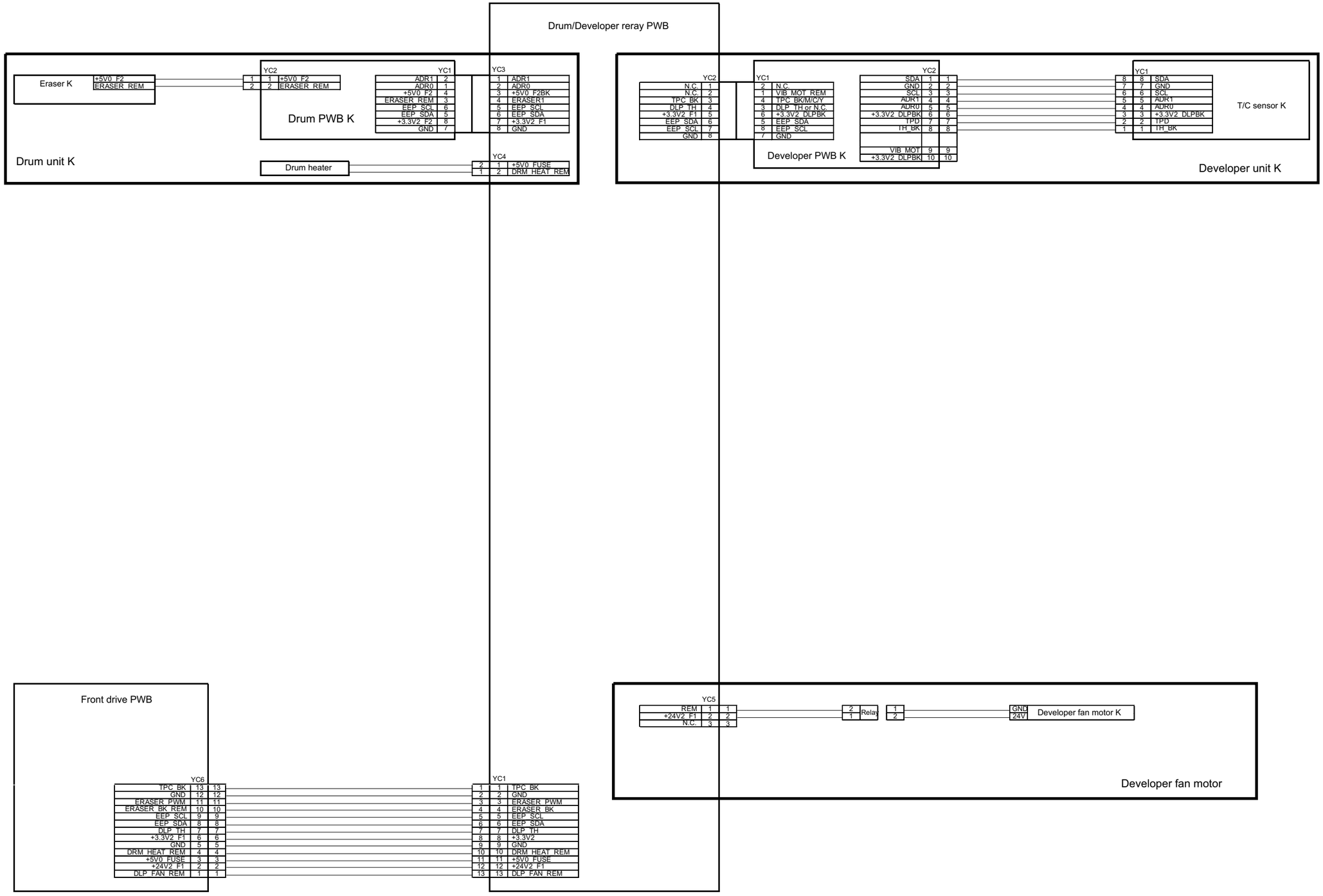

(9)Fuser PWB and IH PWB

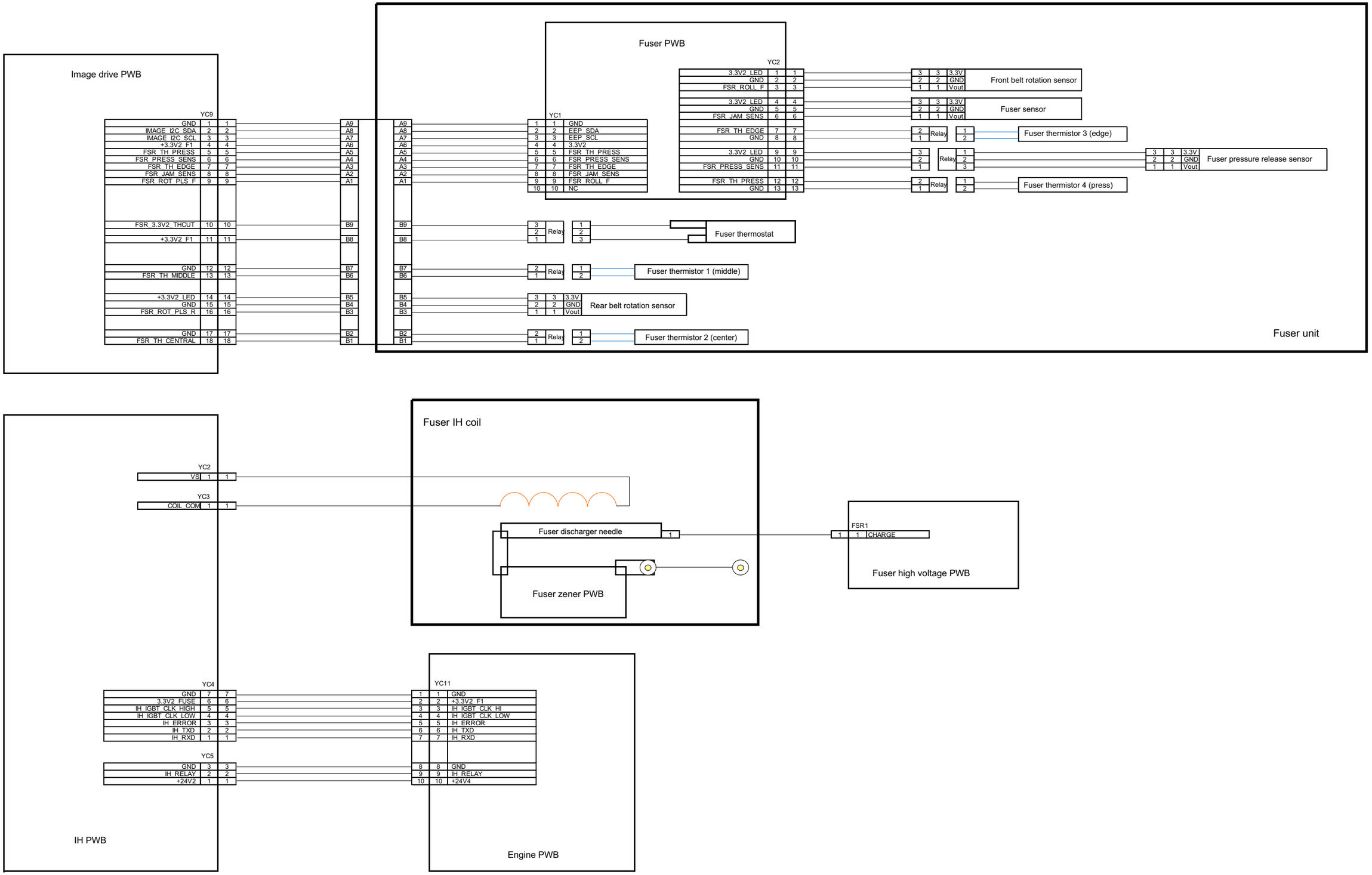

(10)Low power voltage PWB and Paper feeder connection

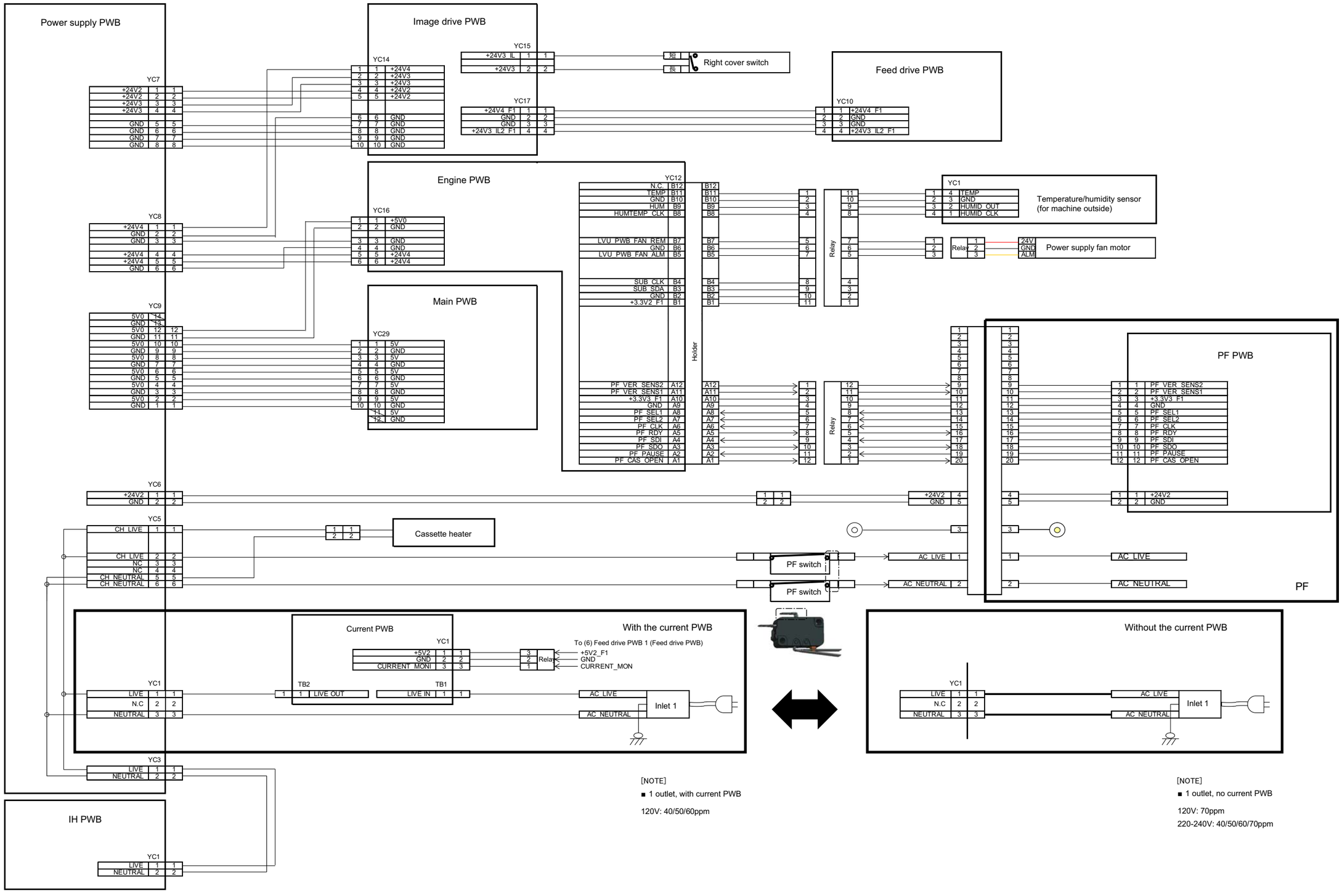

[NOTE]
■ 1 outlet, with current PWB
120V: 40/50/60ppm

[NOTE]
■ 1 outlet, no current PWB
120V: 70ppm
220-240V: 40/50/60/70ppm

(11)Operation panel PWB and Main PWB

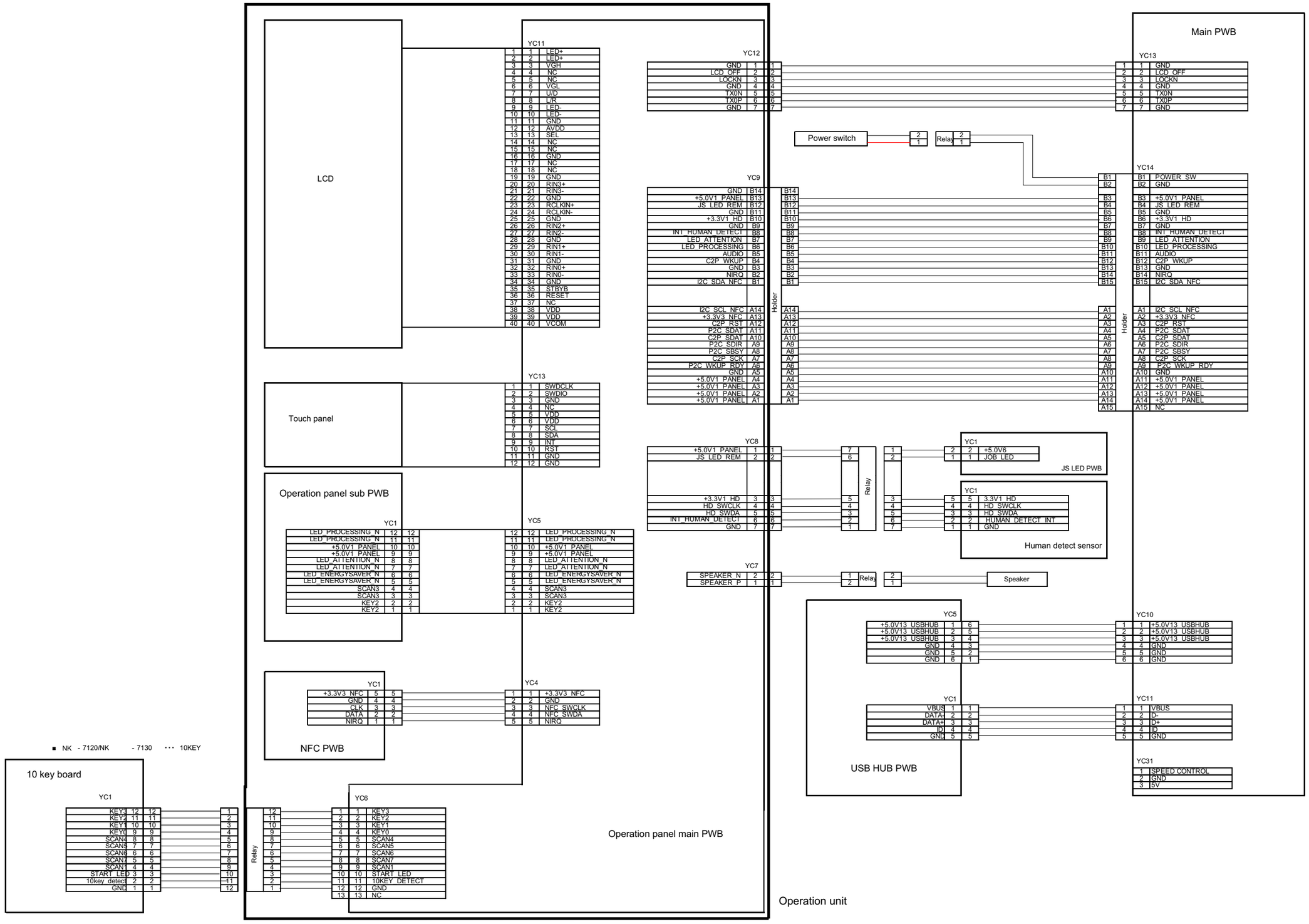

(12)Image scanner and DP connection

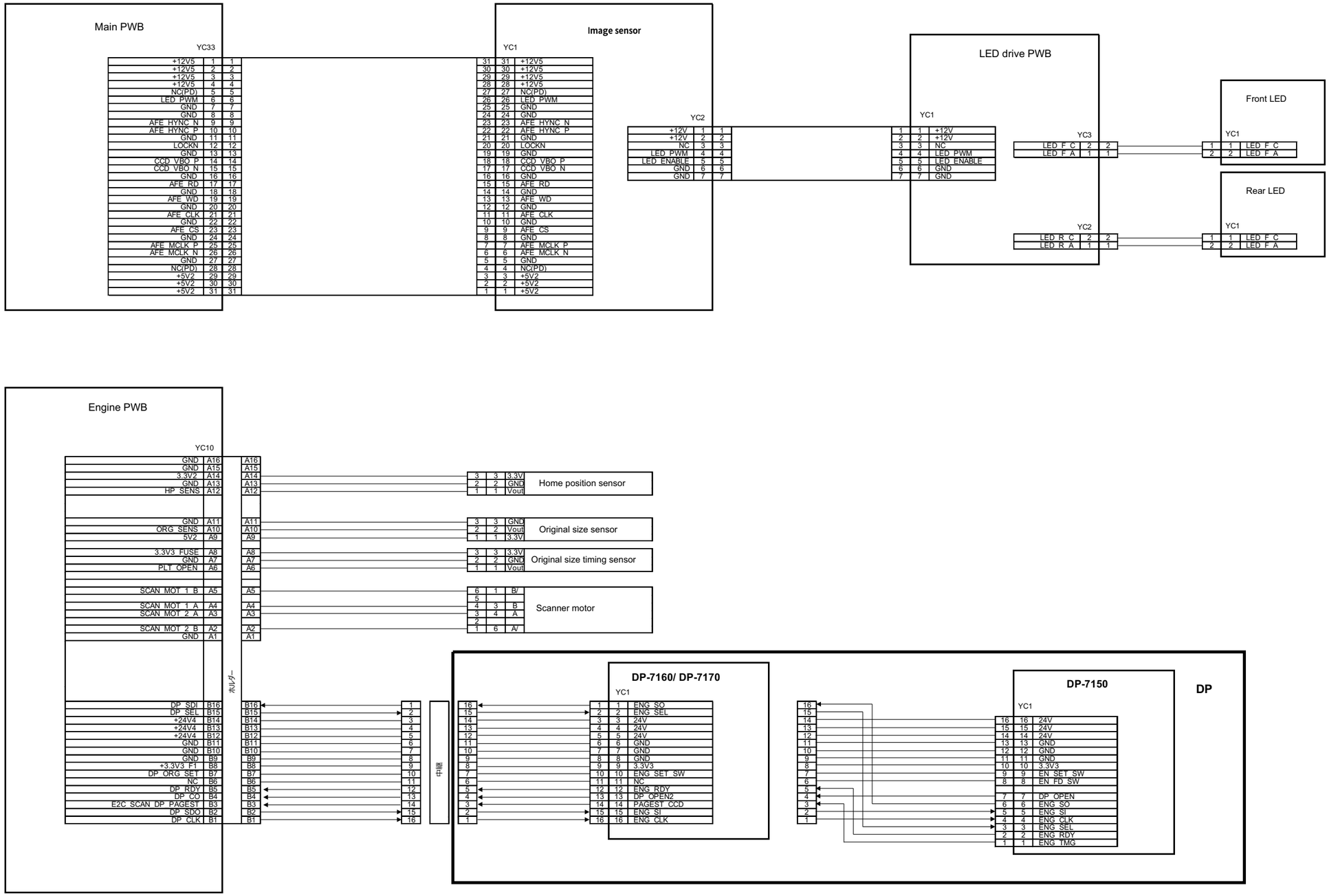

(13)Conveying unit/Document finisher connection and JS connection

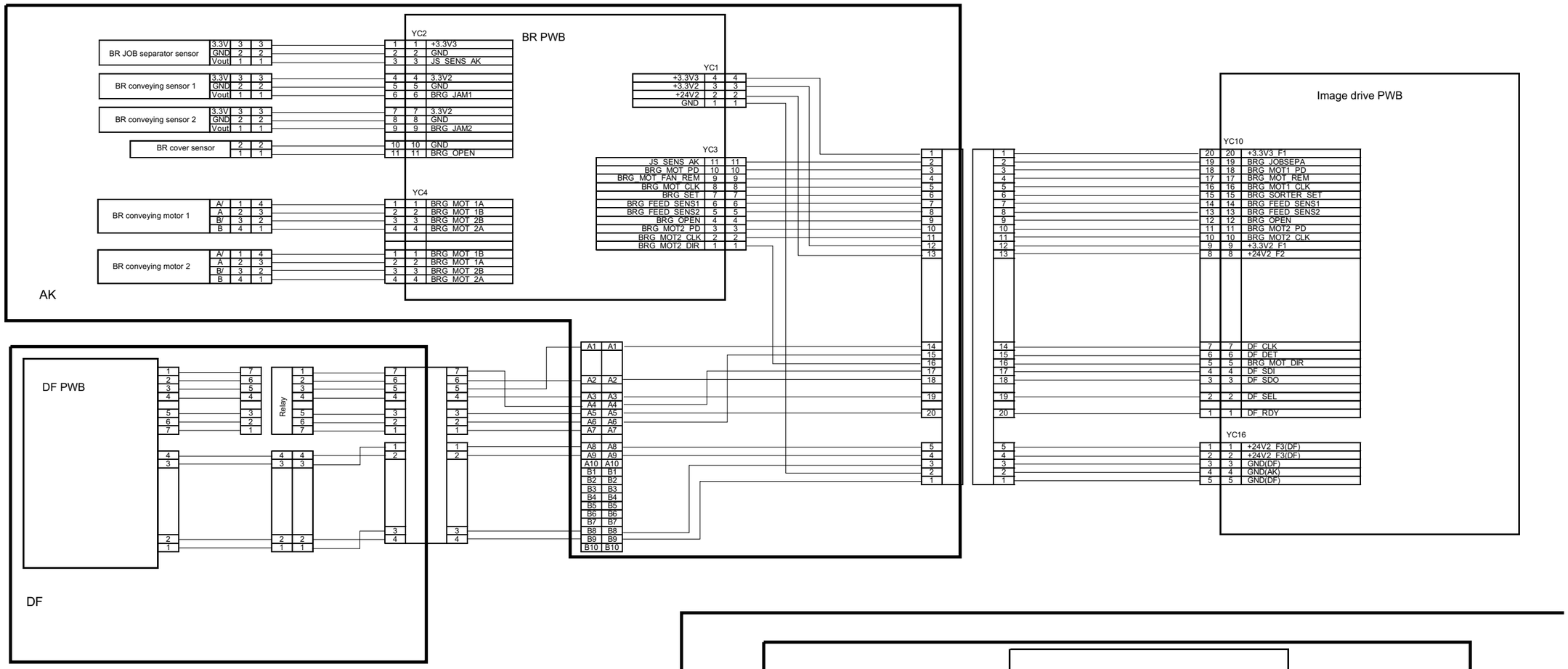

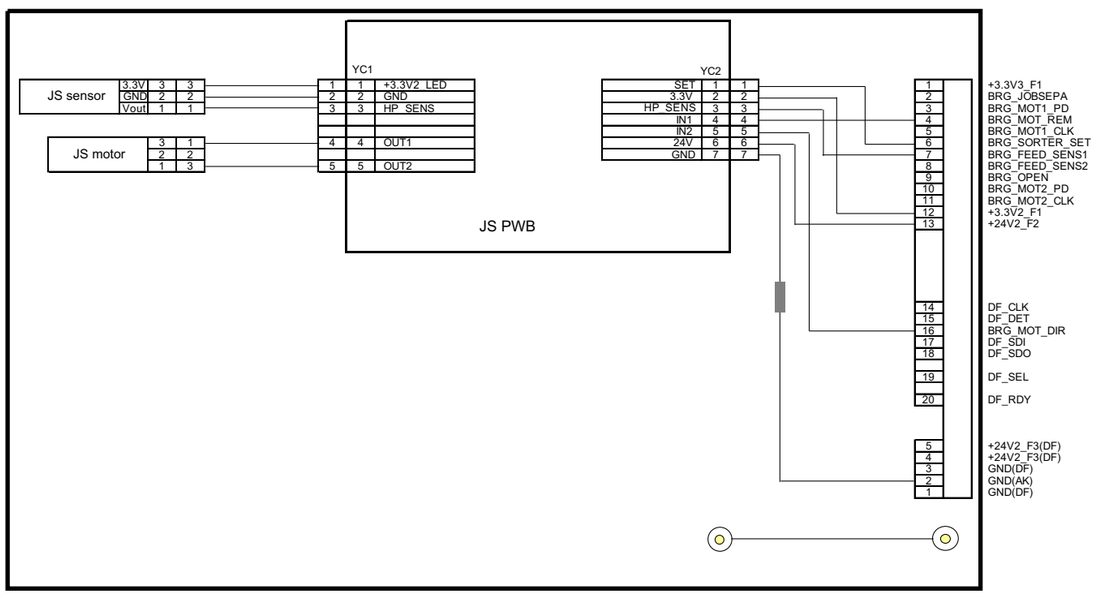

(14)Other options connection

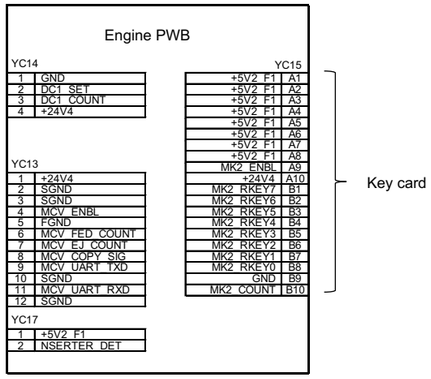

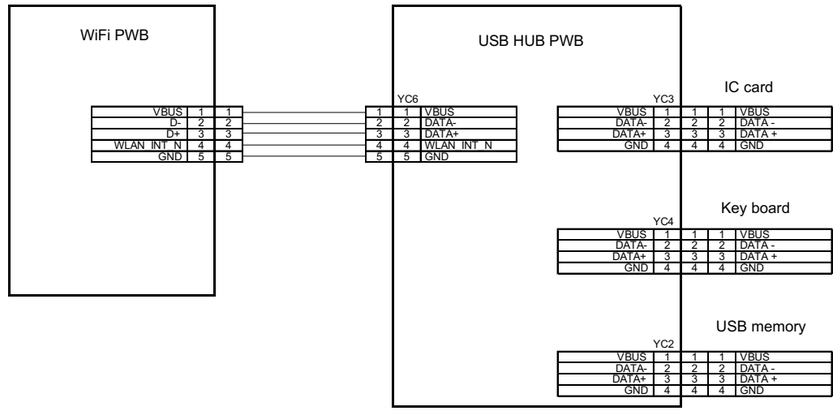

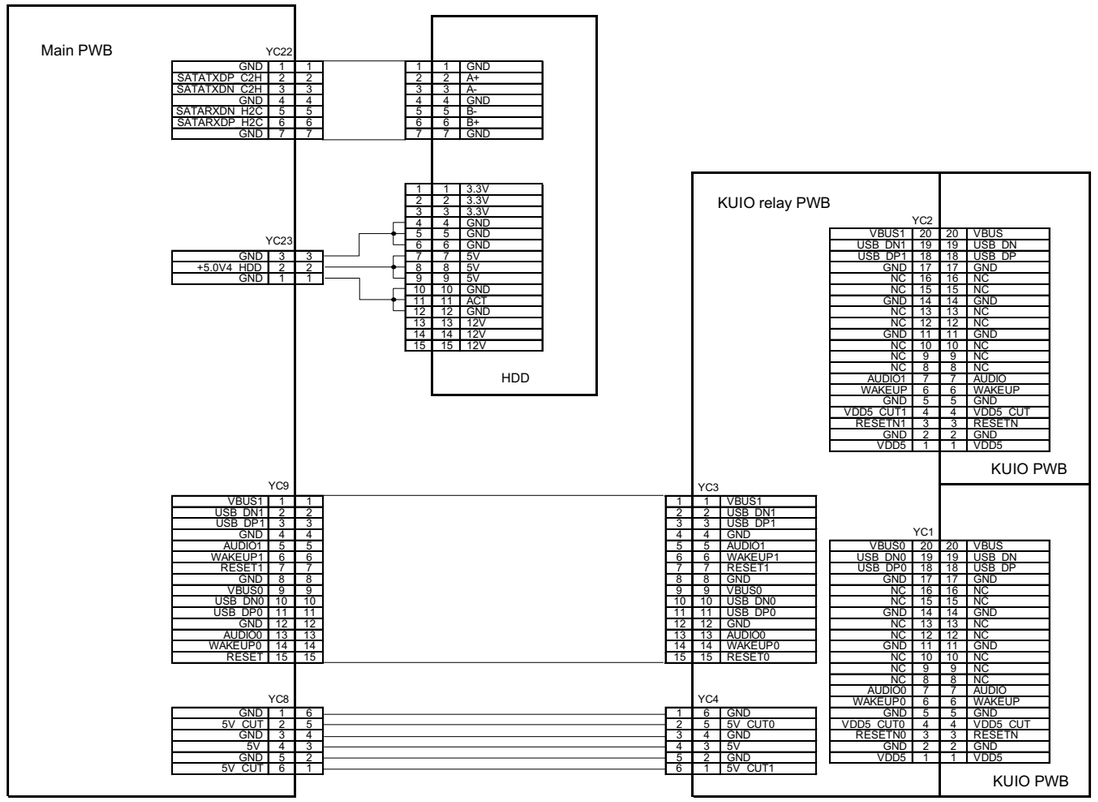

9 - 5 Wiring diagram (Options)

(1)Document processor (DP-7150)

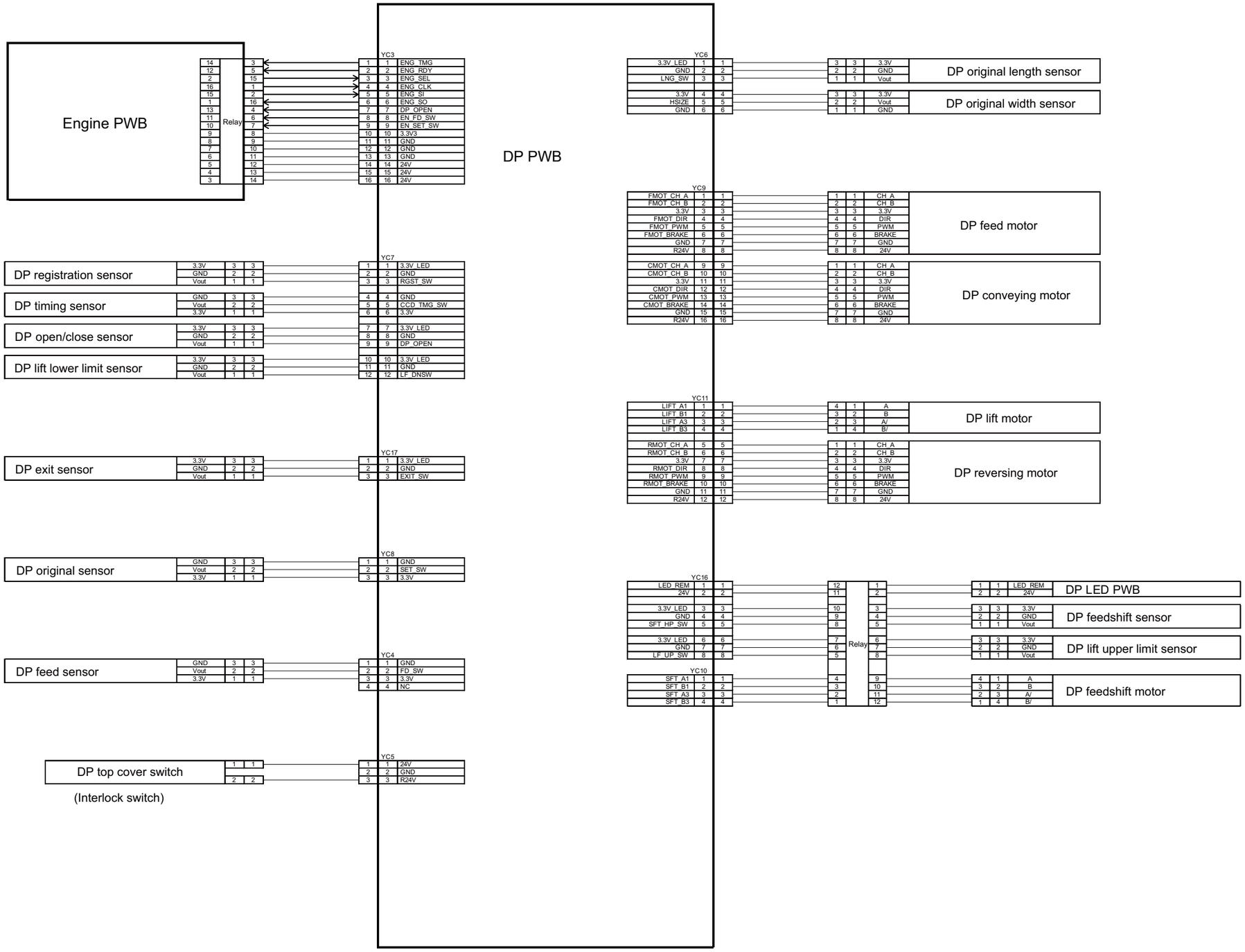

(2)Document processor (DP-7160/DP-7170)

(1/2)

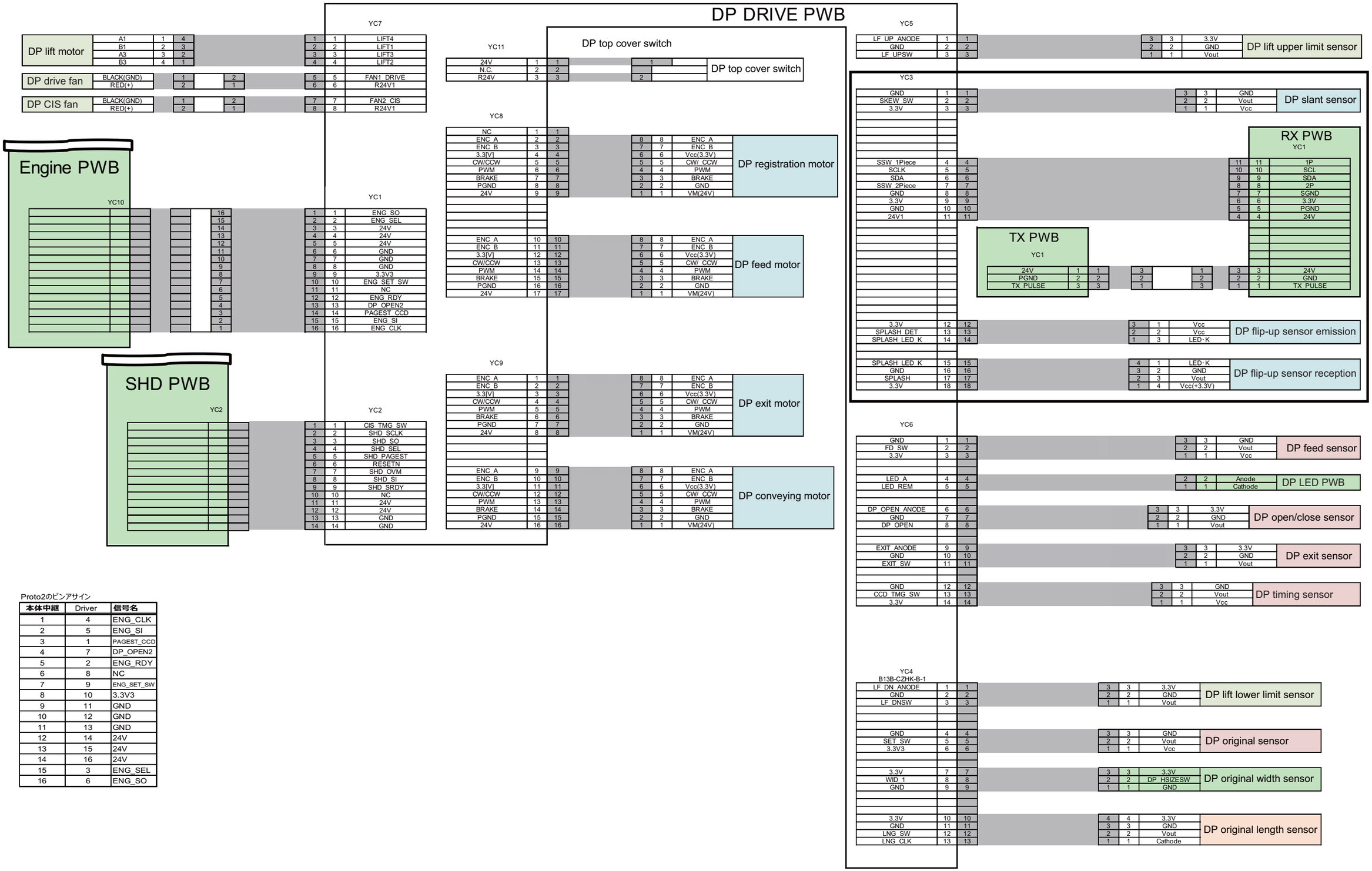

Proto2のピンアサイン

本体中継	Driver	信号名
1	4	ENG_CLK
2	5	ENG_SI
3	1	PAGEST_CCD
4	7	DP_OPEN2
5	2	ENG_RDY
6	8	NC
7	9	ENG_SET_SW
8	10	3.3V3
9	11	GND
10	12	GND
11	13	GND
12	14	24V
13	15	24V
14	16	24V
15	3	ENG_SEL
16	6	ENG_SO

(2/2)

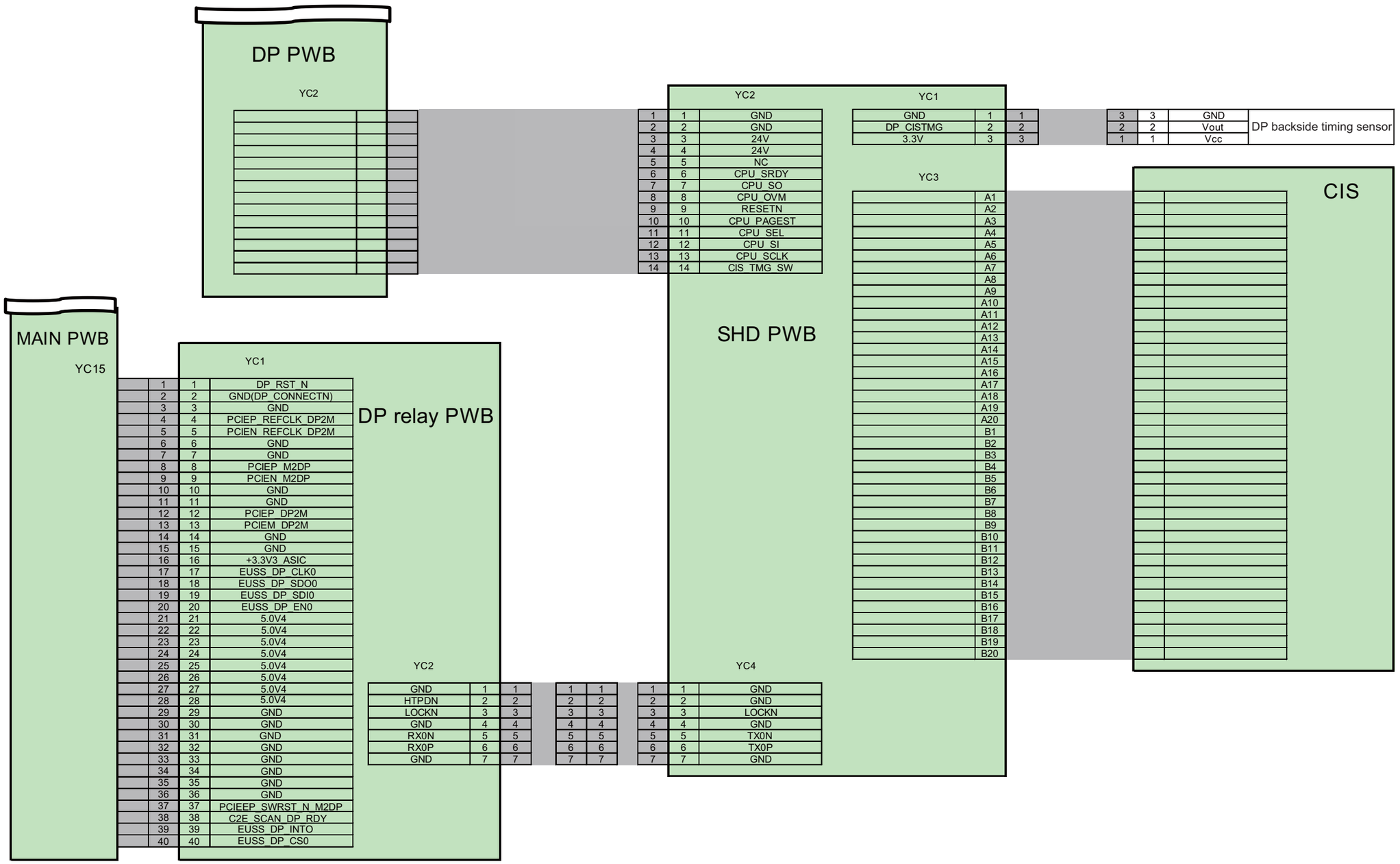
DP PWB
YC2
1 1 GND
2 2 GND
3 3 24V
4 4 24V
5 5 NC
6 6 CPU_SRDY
7 7 CPU_SO
8 8 CPU_OVM
9 9 RESETN
10 10 CPU_PAGEST
11 11 CPU_SEL
12 12 CPU_SI
13 13 CPU_SCLK
14 14 CIS_TMG_SW
SHD PWB
YC2
YC1
GND 1 1
DP_CISTMG 2 2
3.3V 3 3
3 3 GND
2 2 Vout
1 1 Vcc
DP backside timing sensor
YC3
A1
A2
A3
A4
A5
A6
A7
A8
A9
A10
A11
A12
A13
A14
A15
A16
A17
A18
A19
A20
B1
B2
B3
B4
B5
B6
B7
B8
B9
B10
B11
B12
B13
B14
B15
B16
B17
B18
B19
B20
CIS
MAIN PWB
YC15
1 1 DP_RST_N
2 2 GND(DP_CONNECTN)
3 3 GND
4 4 PCIEP_REFCLK_DP2M
5 5 PCIEN_REFCLK_DP2M
6 6 GND
7 7 GND
8 8 PCIEP_M2DP
9 9 PCIEN_M2DP
10 10 GND
11 11 GND
12 12 PCIEP_DP2M
13 13 PCIEM_DP2M
14 14 GND
15 15 GND
16 16 +3.3V3_ASIC
17 17 EUSS_DP_CLK0
18 18 EUSS_DP_SDO0
19 19 EUSS_DP_SDI0
20 20 EUSS_DP_EN0
21 21 5.0V4
22 22 5.0V4
23 23 5.0V4
24 24 5.0V4
25 25 5.0V4
26 26 5.0V4
27 27 5.0V4
28 28 5.0V4
29 29 GND
30 30 GND
31 31 GND
32 32 GND
33 33 GND
34 34 GND
35 35 GND
36 36 GND
37 37 PCIEEP_SWRST_N_M2DP
38 38 C2E_SCAN_DP_RDY
39 39 EUSS_DP_INTO
40 40 EUSS_DP_CS0
DP relay PWB
YC1
YC2
YC4
GND 1 1 1 1 1 1 GND
HTPDN 2 2 2 2 2 2 GND
LOCKN 3 3 3 3 3 3 LOCKN
GND 4 4 4 4 4 4 GND
RX0N 5 5 5 5 5 5 TX0N
RX0P 6 6 6 6 6 6 TX0P
GND 7 7 7 7 7 7 GND

(3)Paper Feeder (PF-7140)

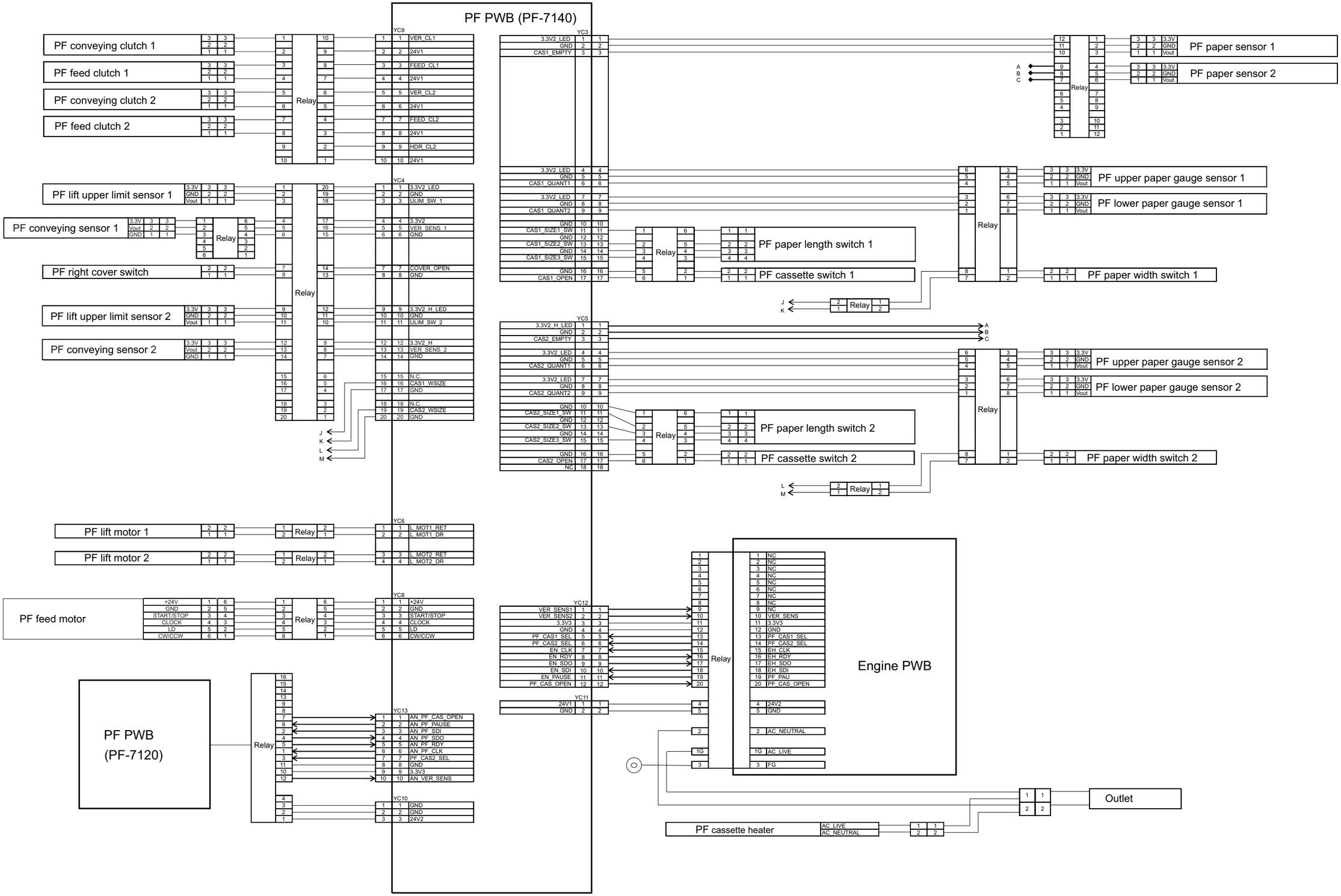

(4)Large capacity paper feeder (PF-7150)

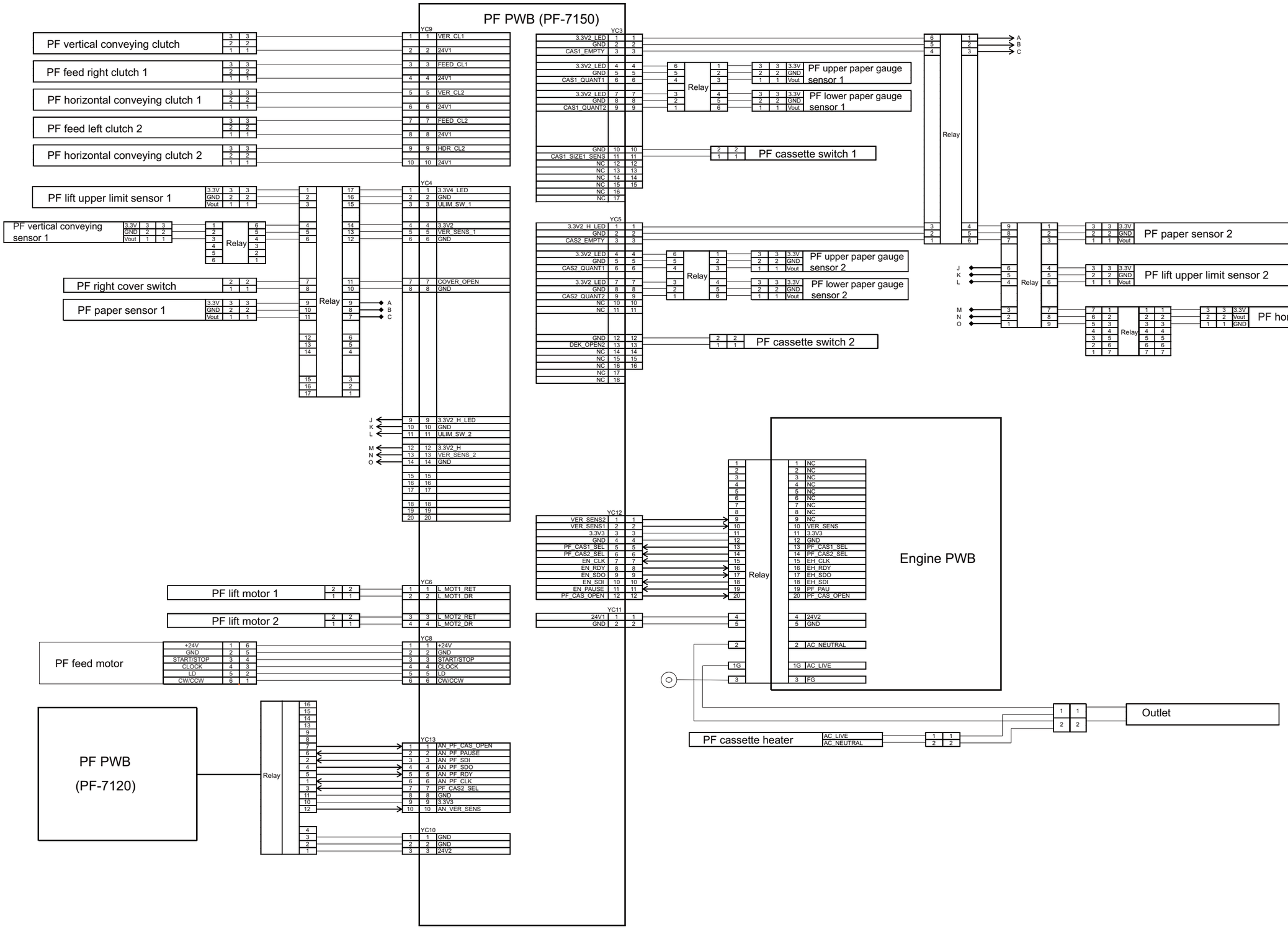

(5)Side Deck (PF-7120)

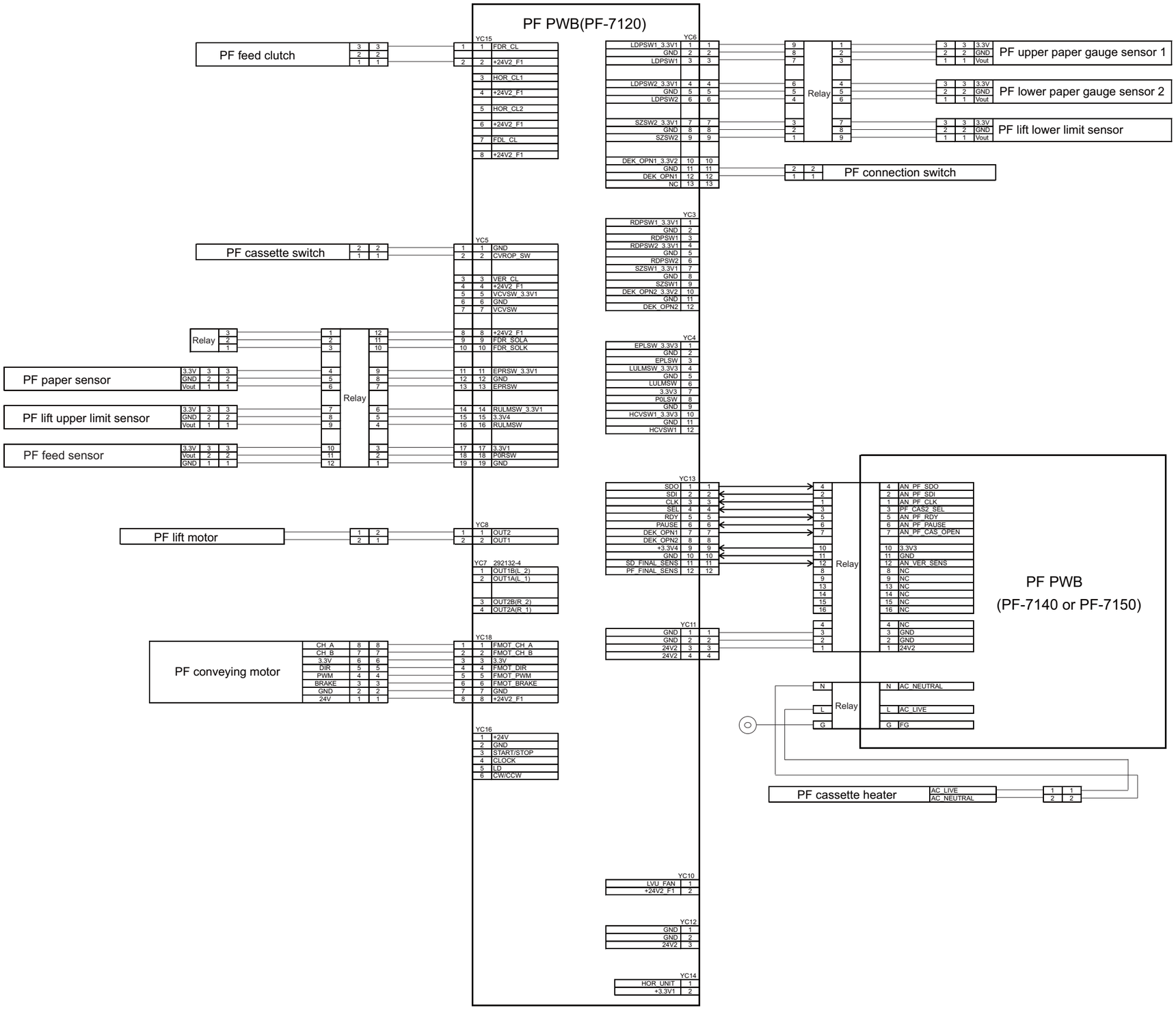

(6)Finisher (DF-7100)

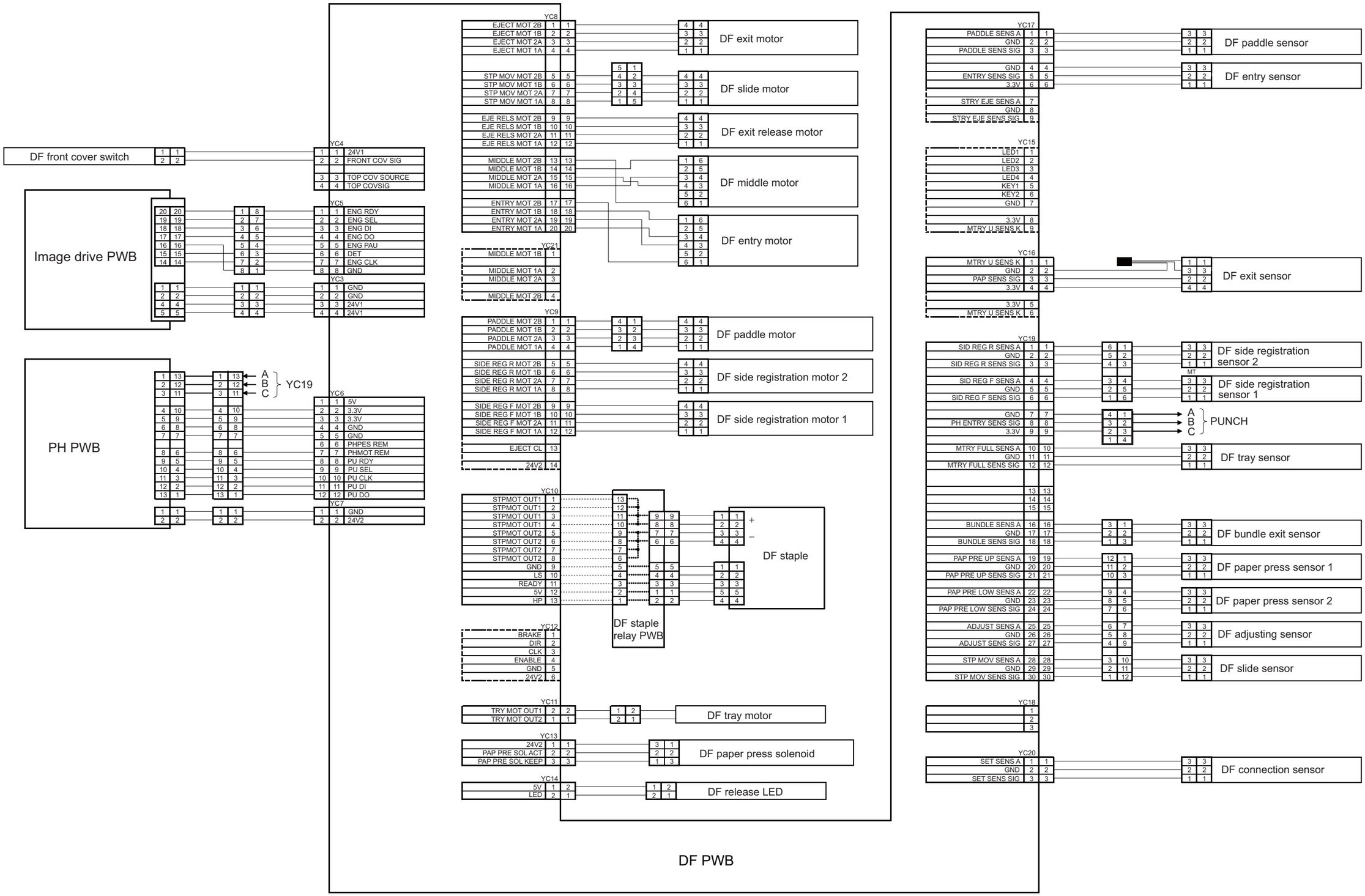

(7)Punch unit (7110/7120/7130): Optional item (Enhancement) for DF-7100

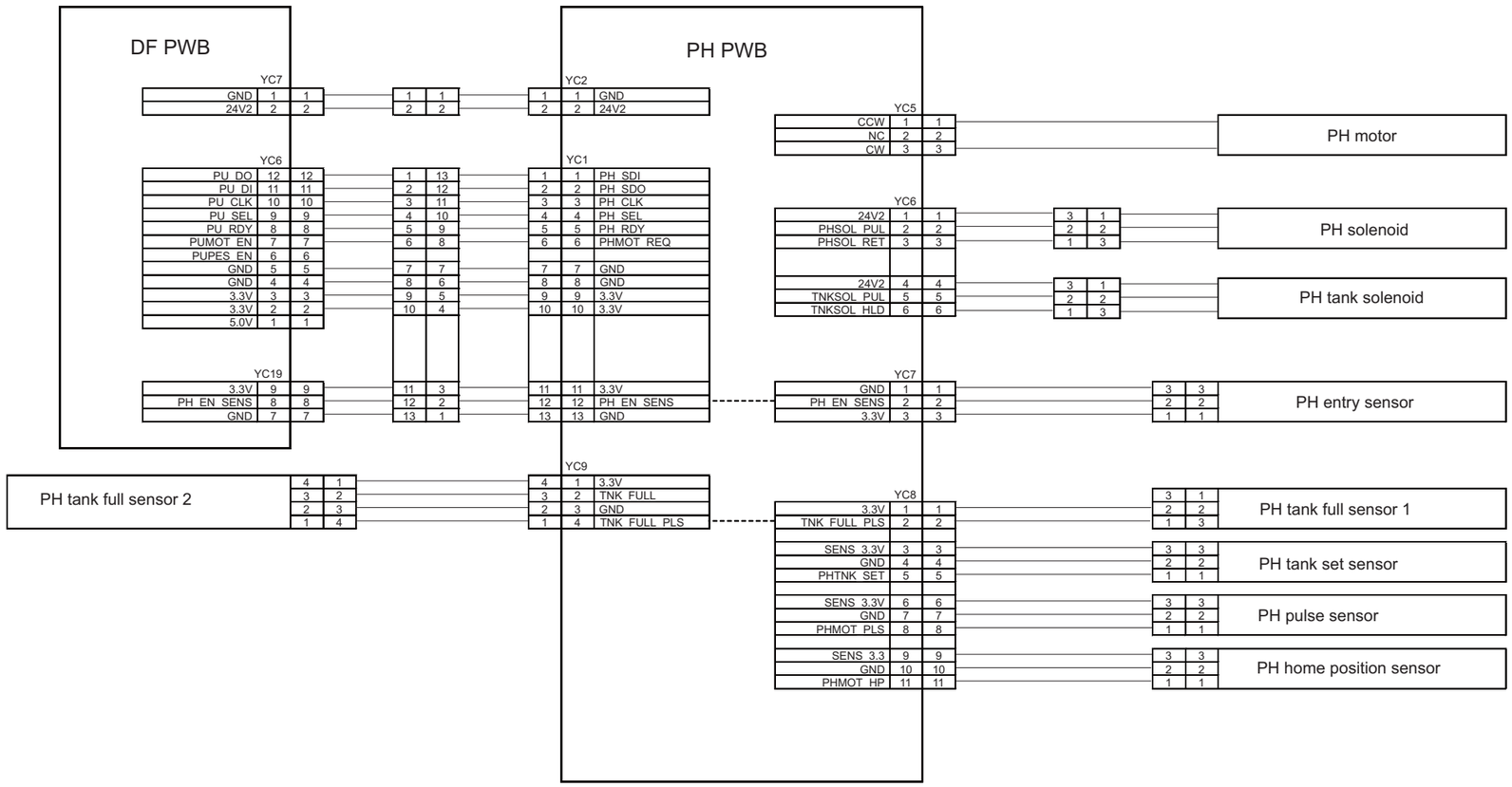

(8)Finisher (DF-7140)

No.1

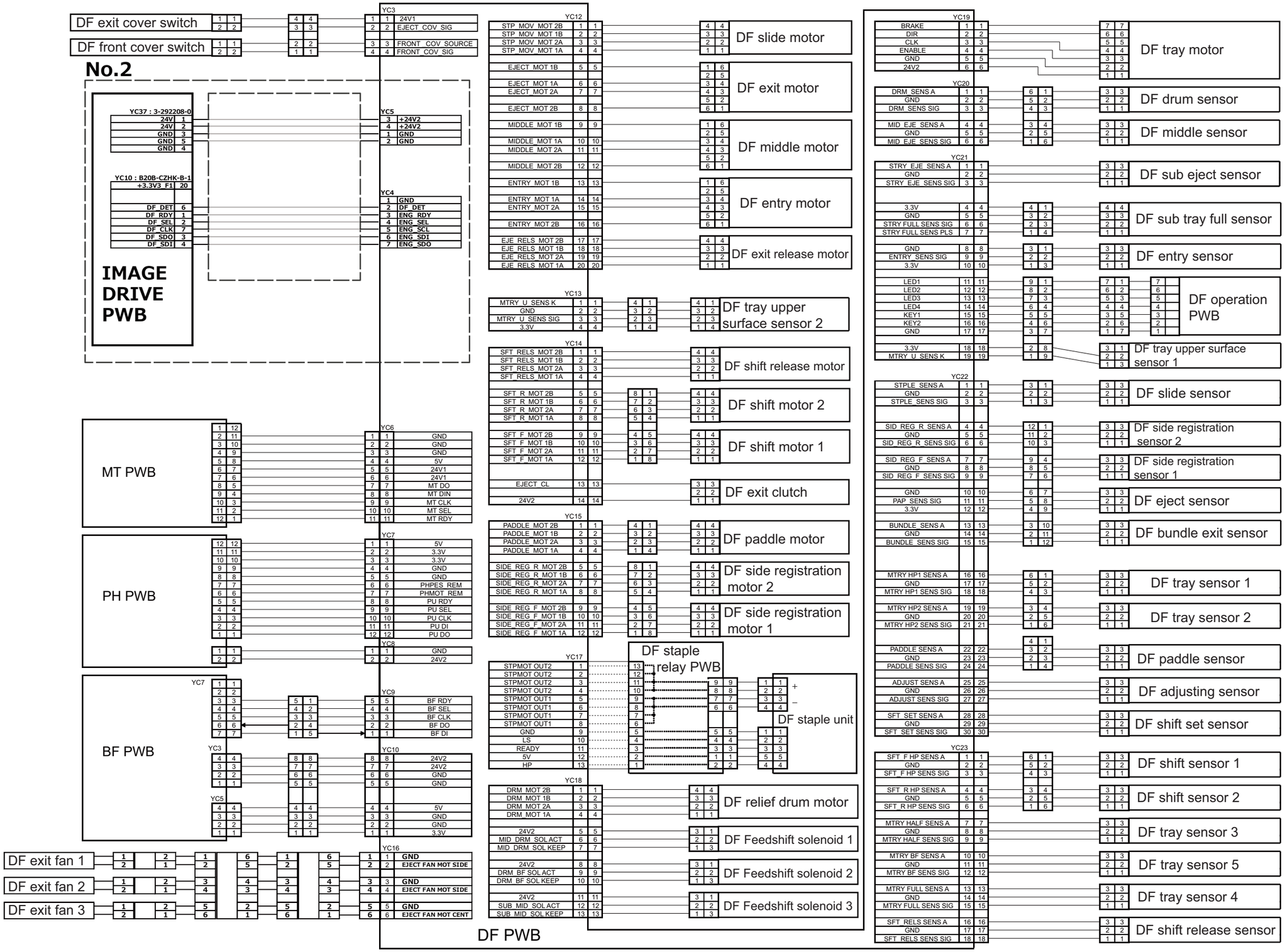

No.2

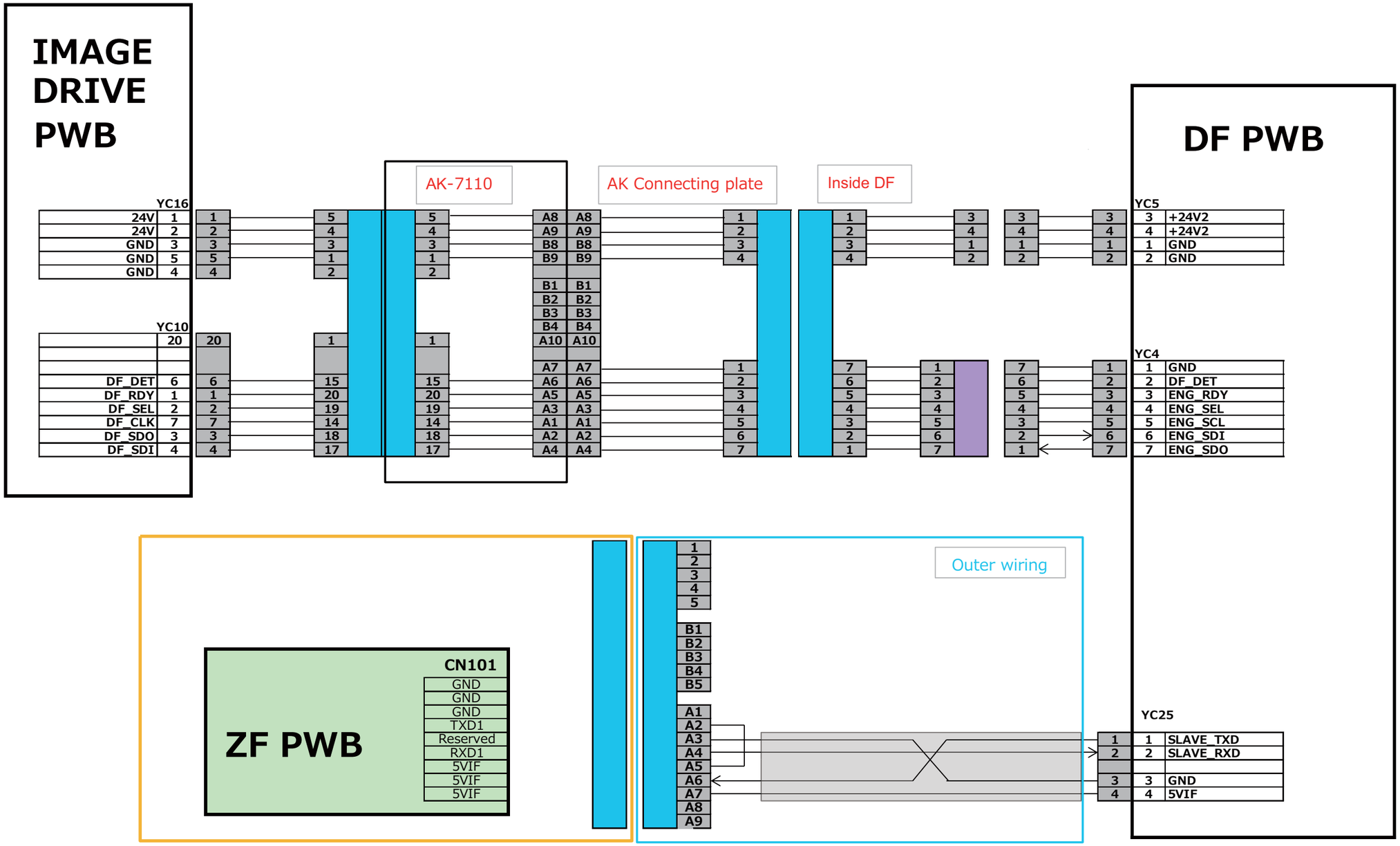
IMAGE DRIVE PWB
YC16
24V 1
24V 2
GND 3
GND 5
GND 4
YC10
20
DF_DET 6
DF_RDY 1
DF_SEL 2
DF_CLK 7
DF_SDO 3
DF_SDI 4
AK-7110
AK Connecting plate
Inside DF
DF PWB
YC5
3 +24V2
4 +24V2
1 GND
2 GND
YC4
1 GND
2 DF_DET
3 ENG_RDY
4 ENG_SEL
5 ENG_SCL
6 ENG_SDI
7 ENG_SDO
ZF PWB
CN101
GND
GND
GND
TXD1
Reserved
RXD1
5VIF
5VIF
5VIF
Outer wiring
YC25
1 SLAVE_TXD
2 SLAVE_RXD
3 GND
4 5VIF

(9)Mailbox (MT-730(B)): Optional item (Enhancement) for DF-7140

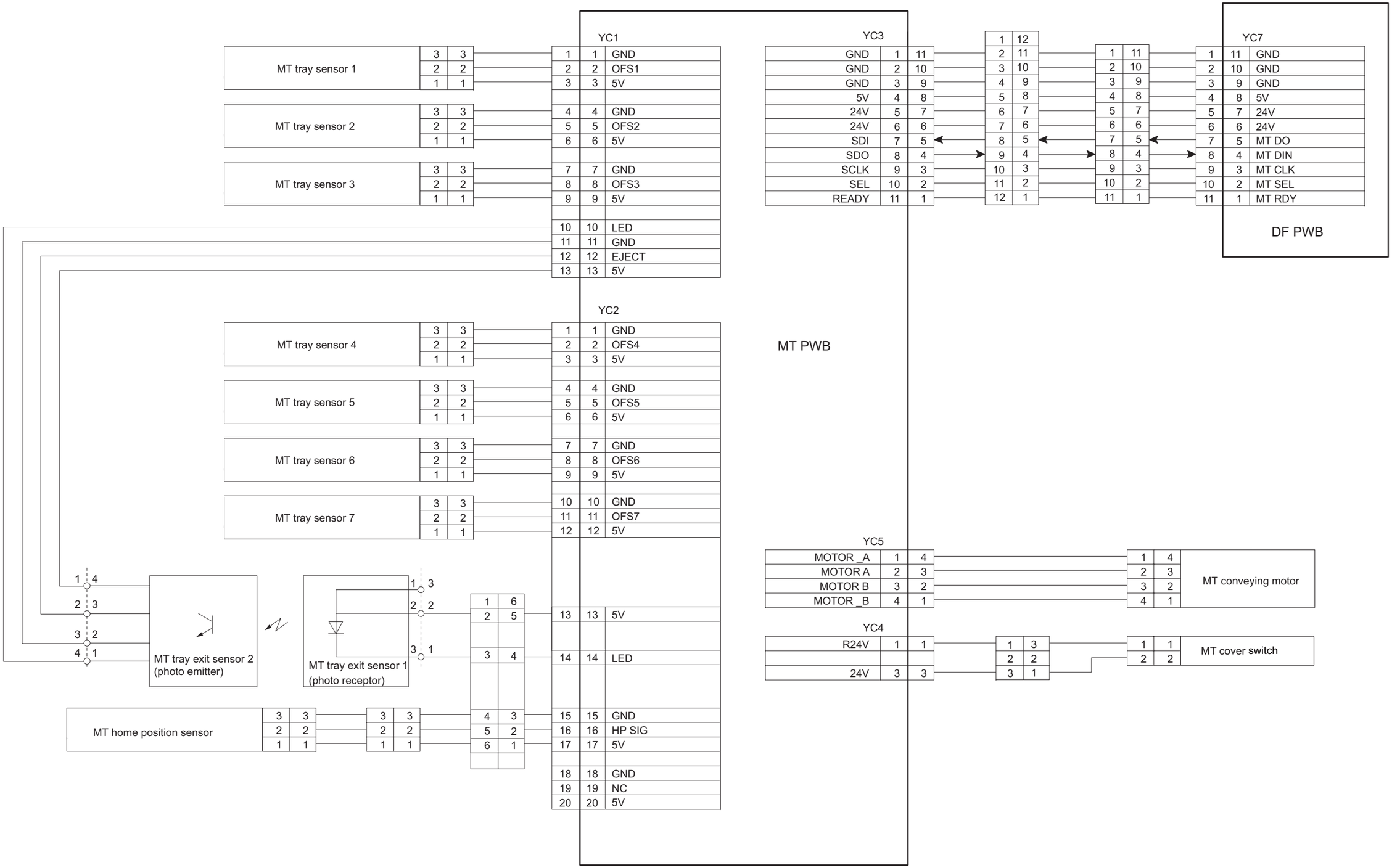

YC1		
1	1	GND
2	2	OFS1
3	3	5V
4	4	GND
5	5	OFS2
6	6	5V
7	7	GND
8	8	OFS3
9	9	5V
10	10	LED
11	11	GND
12	12	EJECT
13	13	5V

YC2		
1	1	GND
2	2	OFS4
3	3	5V
4	4	GND
5	5	OFS5
6	6	5V
7	7	GND
8	8	OFS6
9	9	5V
10	10	GND
11	11	OFS7
12	12	5V
13	13	5V
14	14	LED
15	15	GND
16	16	HP SIG
17	17	5V
18	18	GND
19	19	NC
20	20	5V

YC3		
GND	1	11
GND	2	10
GND	3	9
5V	4	8
24V	5	7
24V	6	6
SDI	7	5
SDO	8	4
SCLK	9	3
SEL	10	2
READY	11	1

YC7		
1	11	GND
2	10	GND
3	9	GND
4	8	5V
5	7	24V
6	6	24V
7	5	MT DO
8	4	MT DIN
9	3	MT CLK
10	2	MT SEL
11	1	MT RDY

YC5		
MOTOR _A	1	4
MOTOR A	2	3
MOTOR B	3	2
MOTOR _B	4	1

YC4		
R24V	1	1
24V	3	3

(10)Booklet folding unit (BF-730): Optional item (Enhancement) for DF-7140

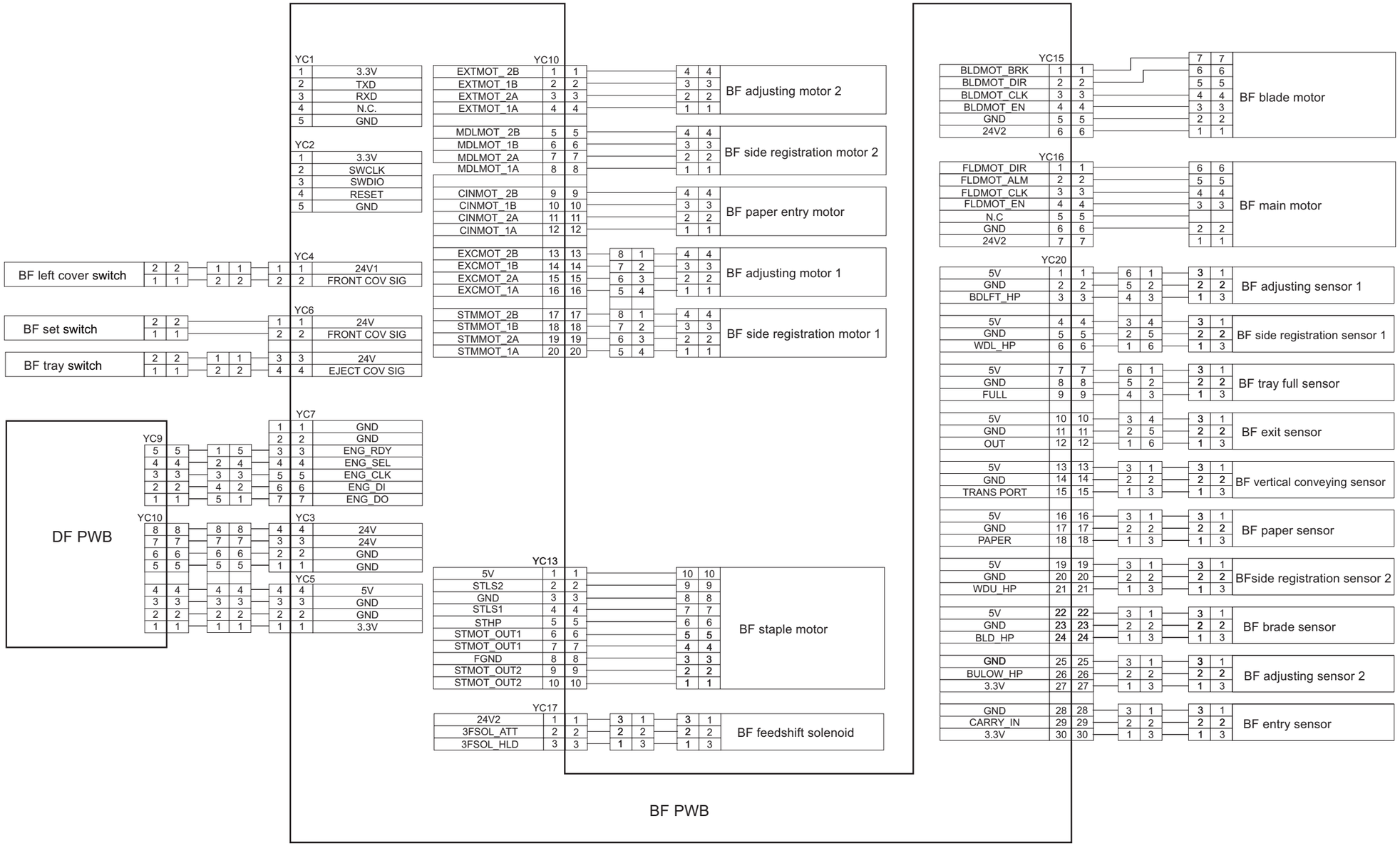

(11)Punch Unit (PH-7): Optional item (Enhancement) for DF-7140/7120/7150

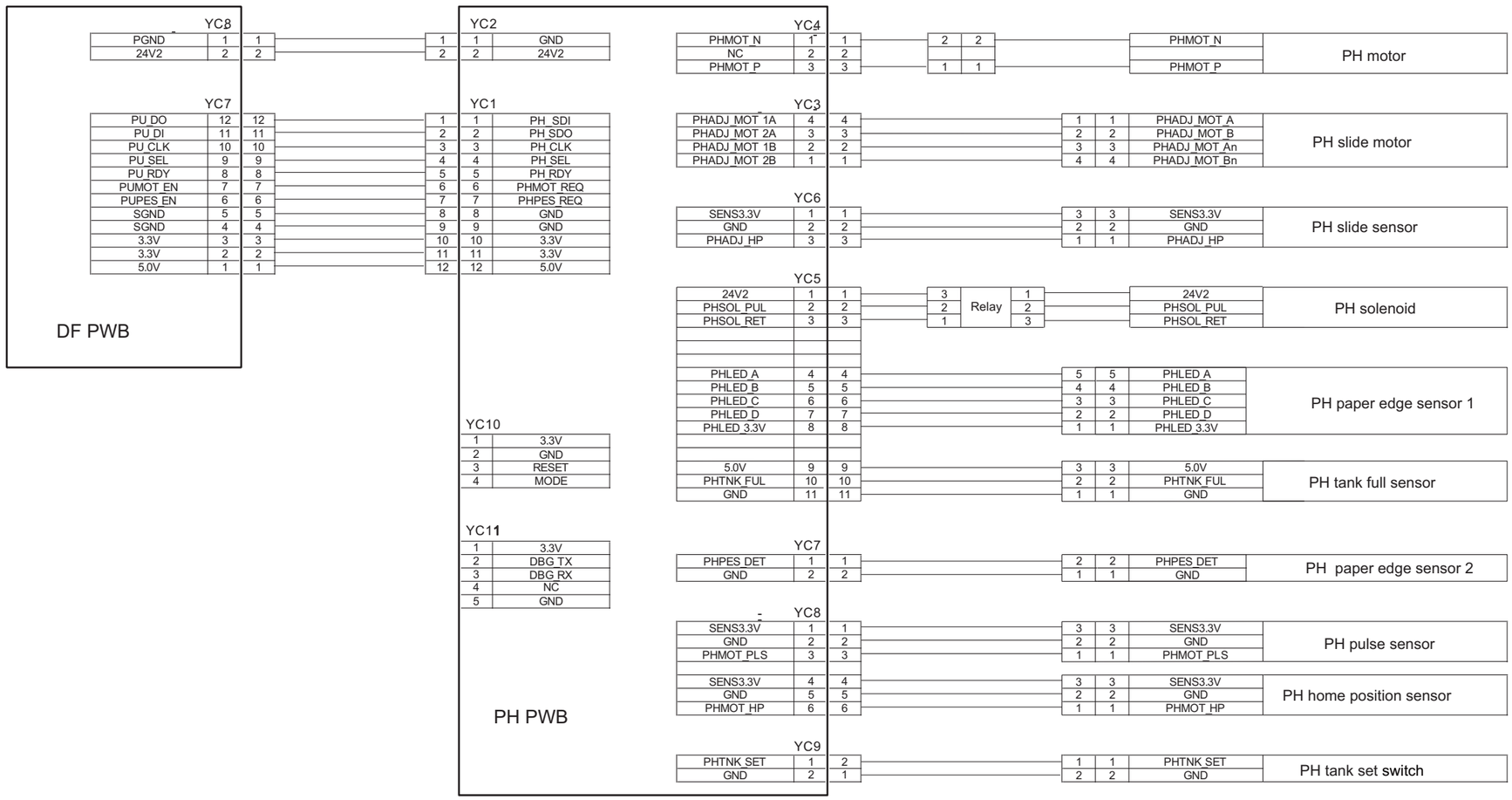

(12)1000-sheet Finisher (DF-7120)

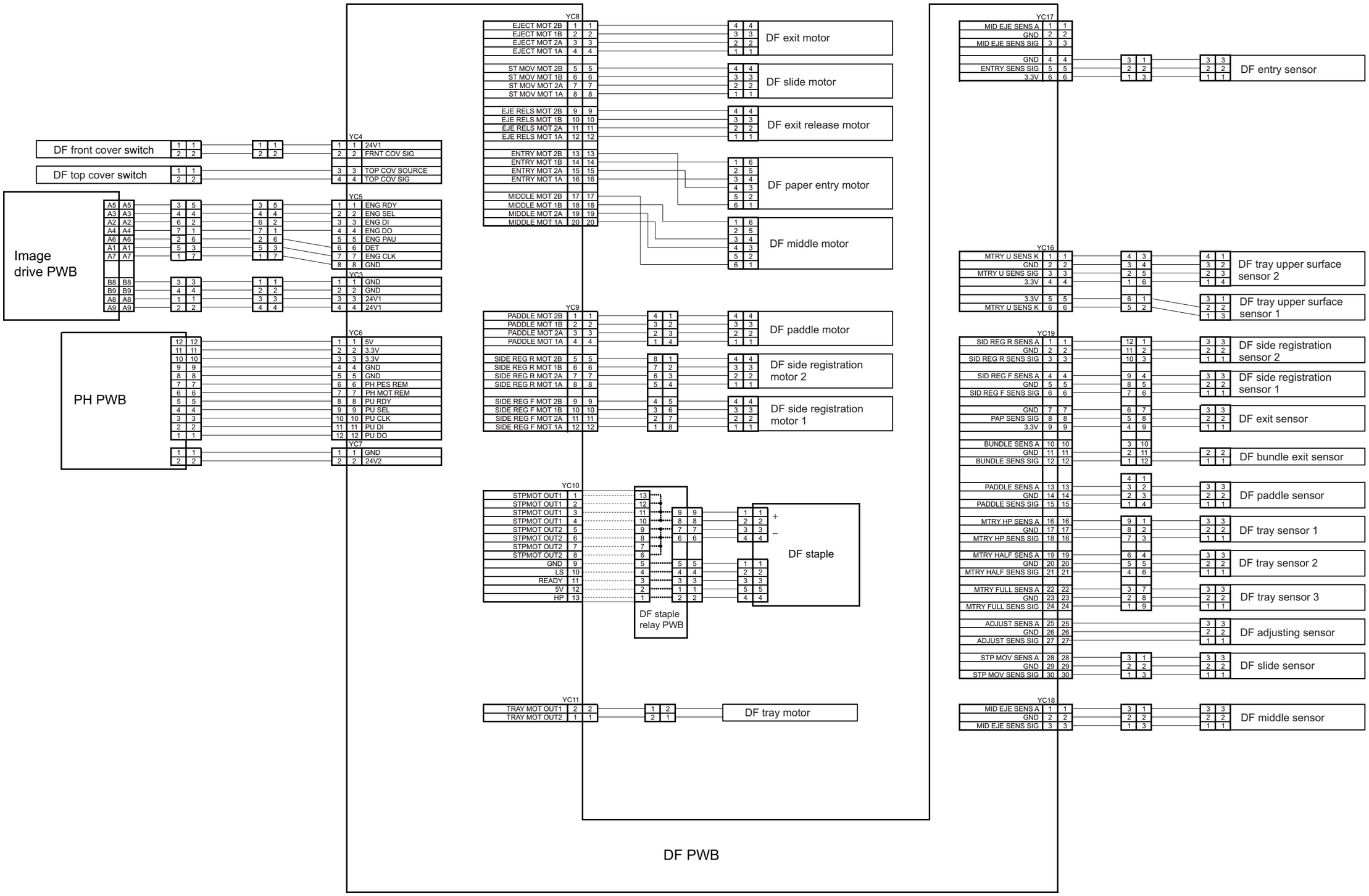

(13)100 sheet staple finisher (DF-7150)

No.1 Right Frame / Drum Unit / Main Tray Sensor / Stapler



No.2 Interface / Middle Tray Unit / Front / Sub Tray Exit

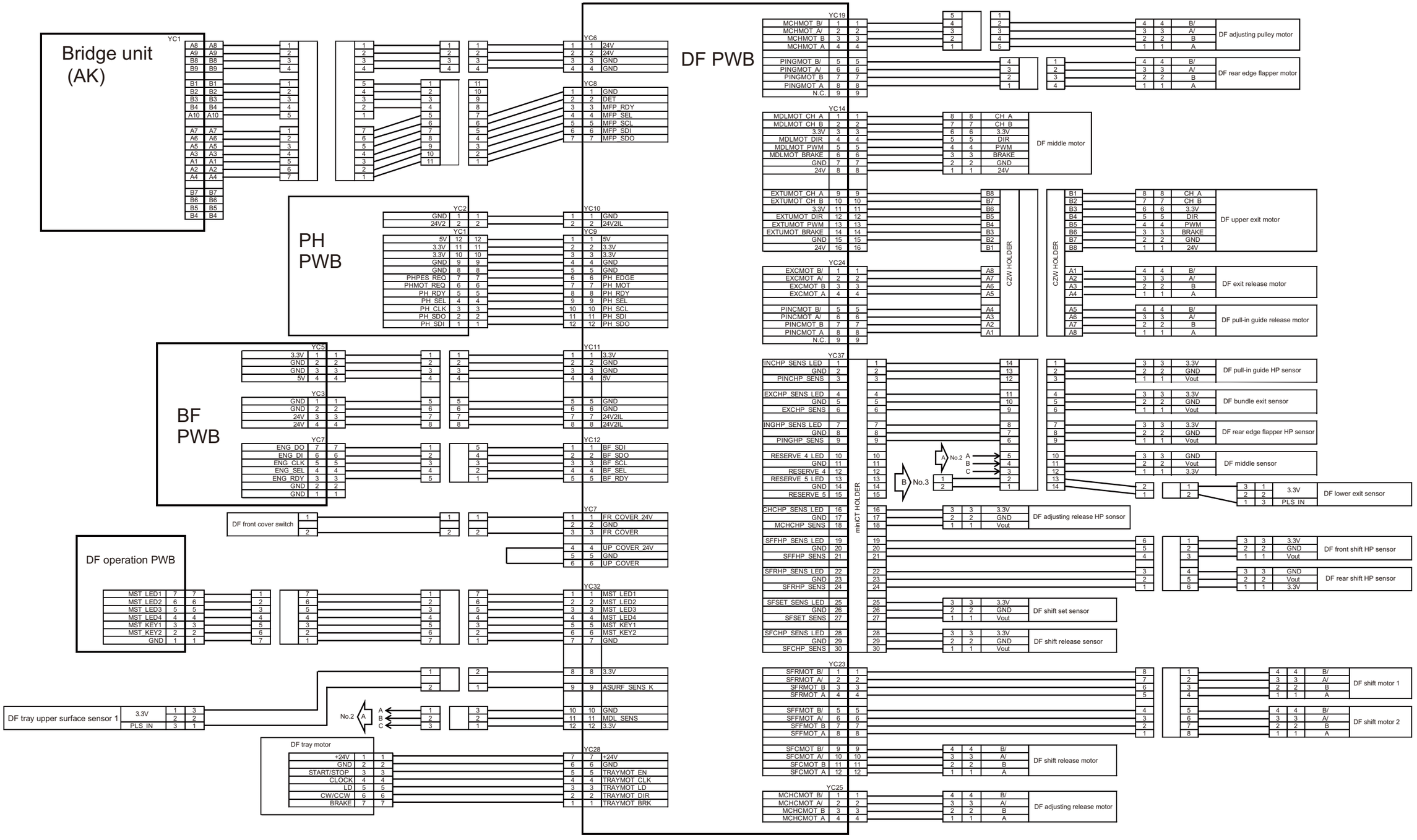

No.3 Left Frame / Stapler Move Unit / Main Tray Exit

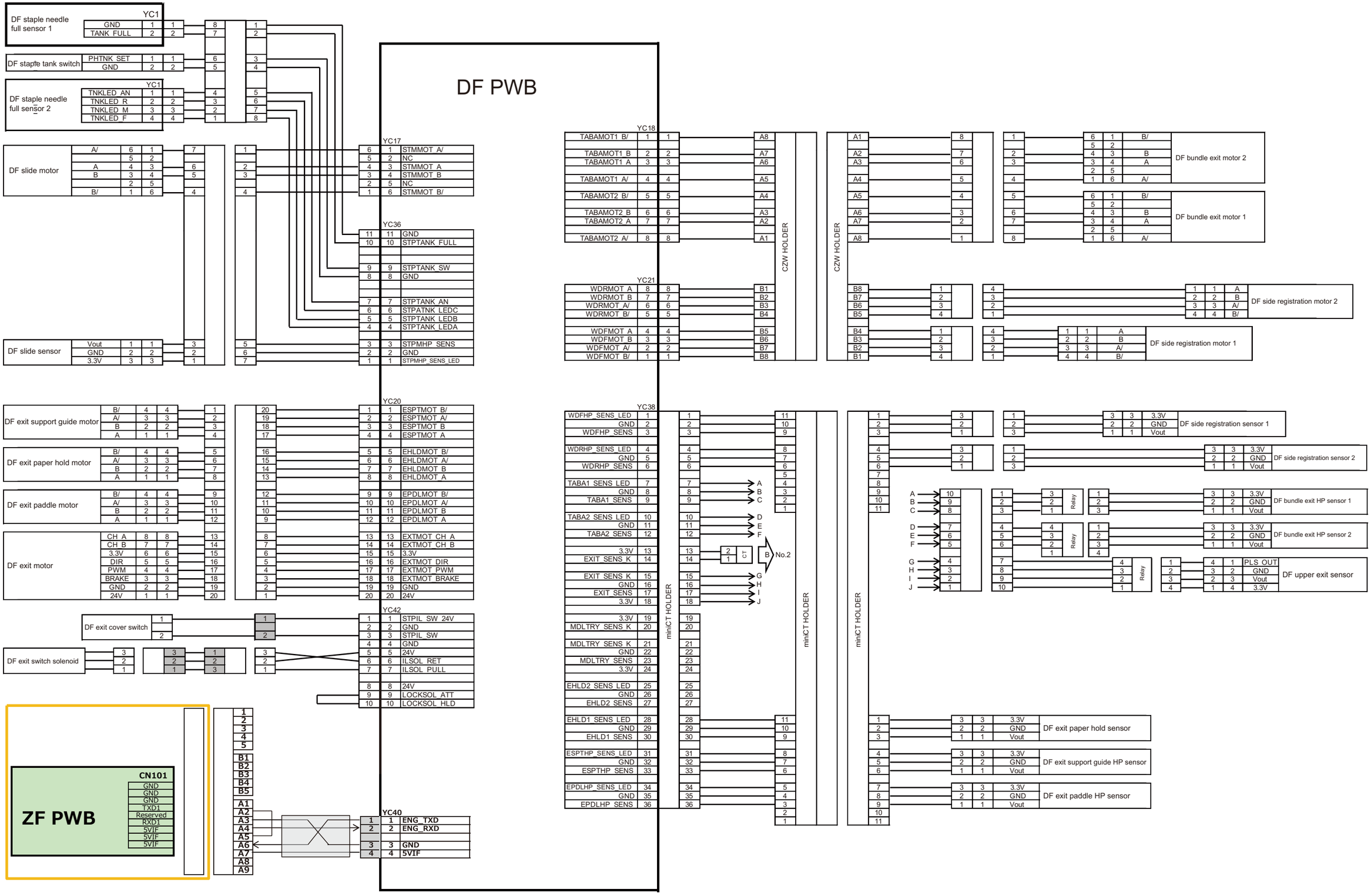

(14)Booklet folding Unit (BF-9100): DF-7150 only

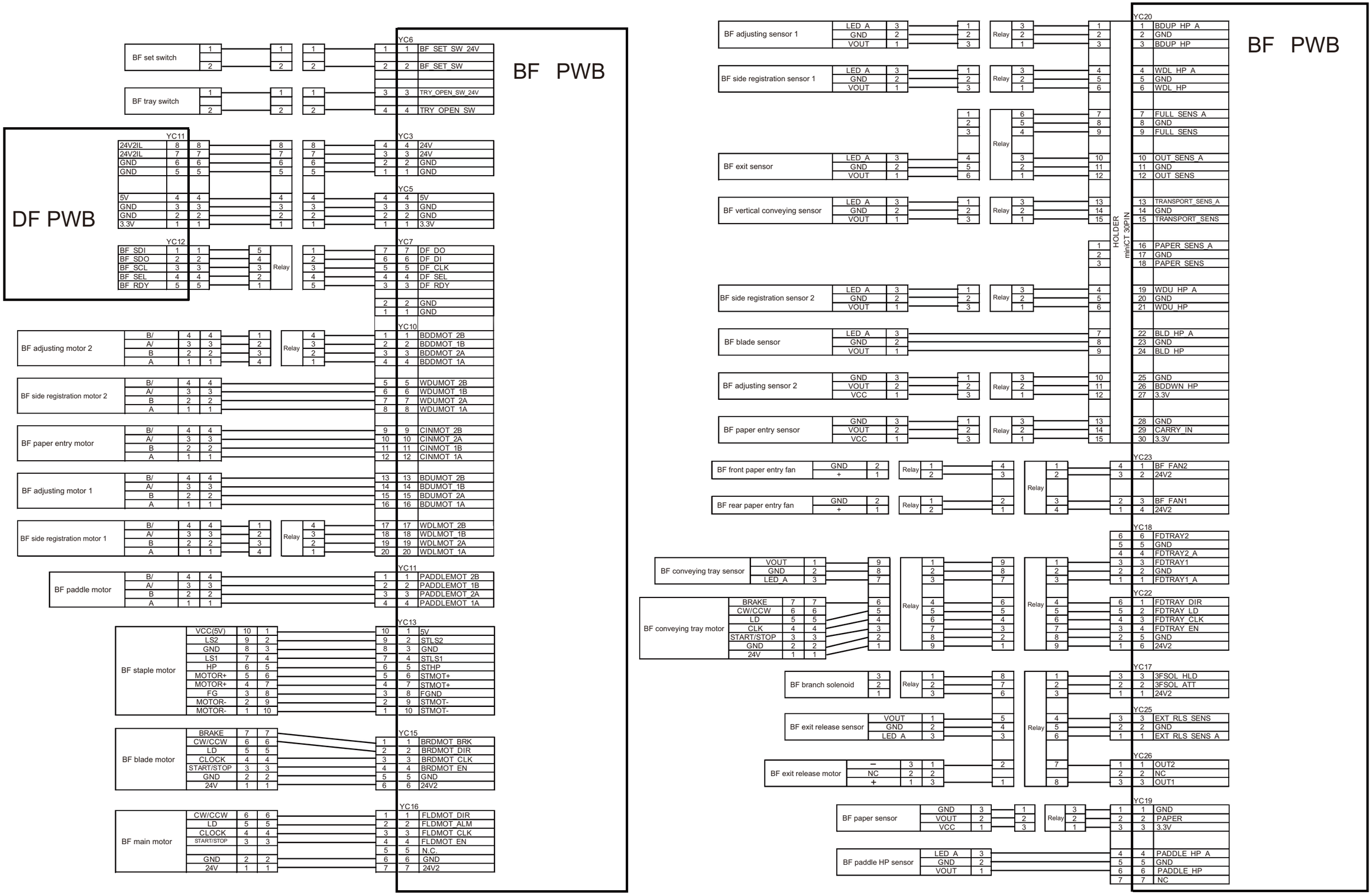

(15)Inserter (IS-7100)

No.1

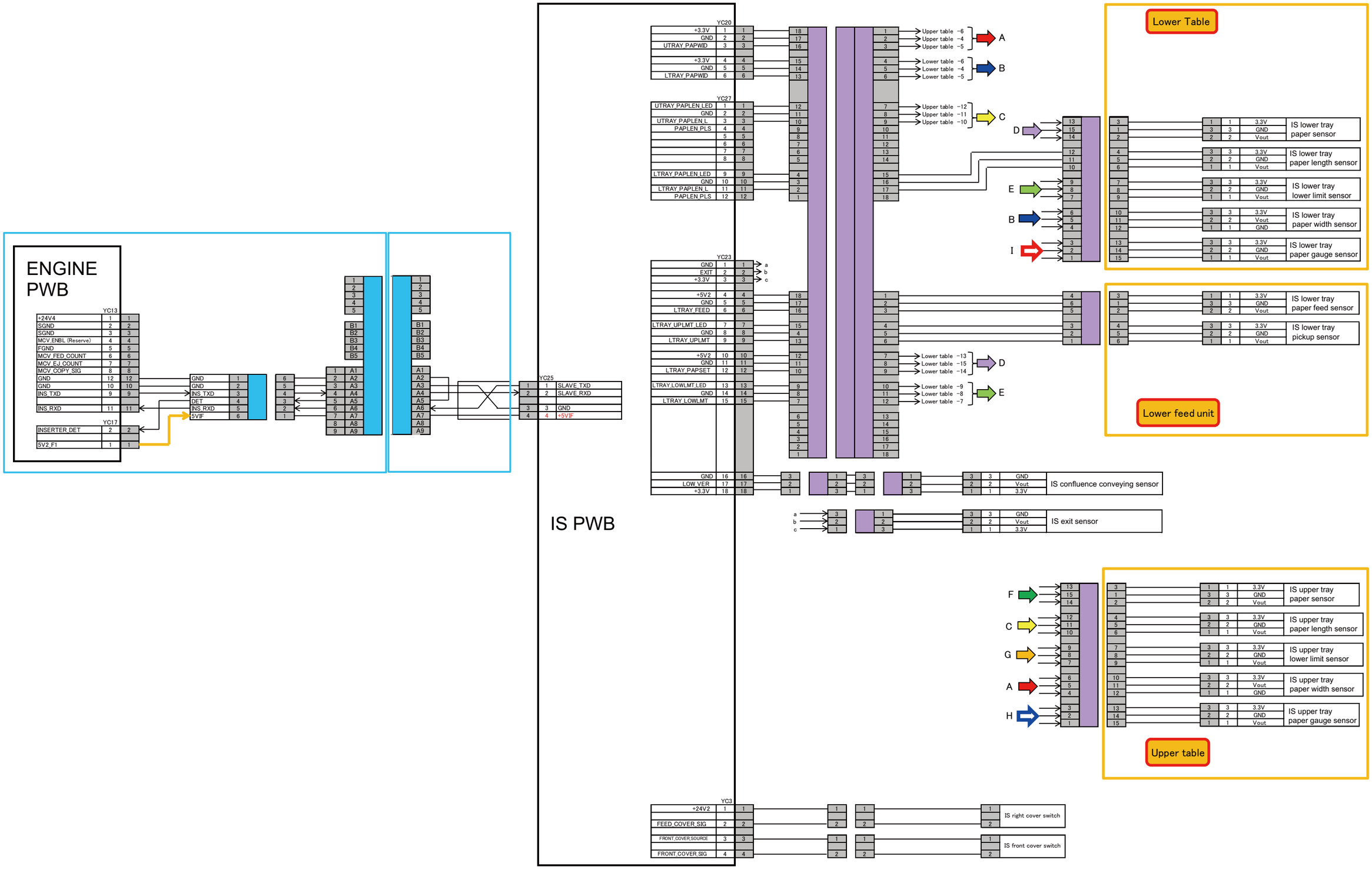

No.2

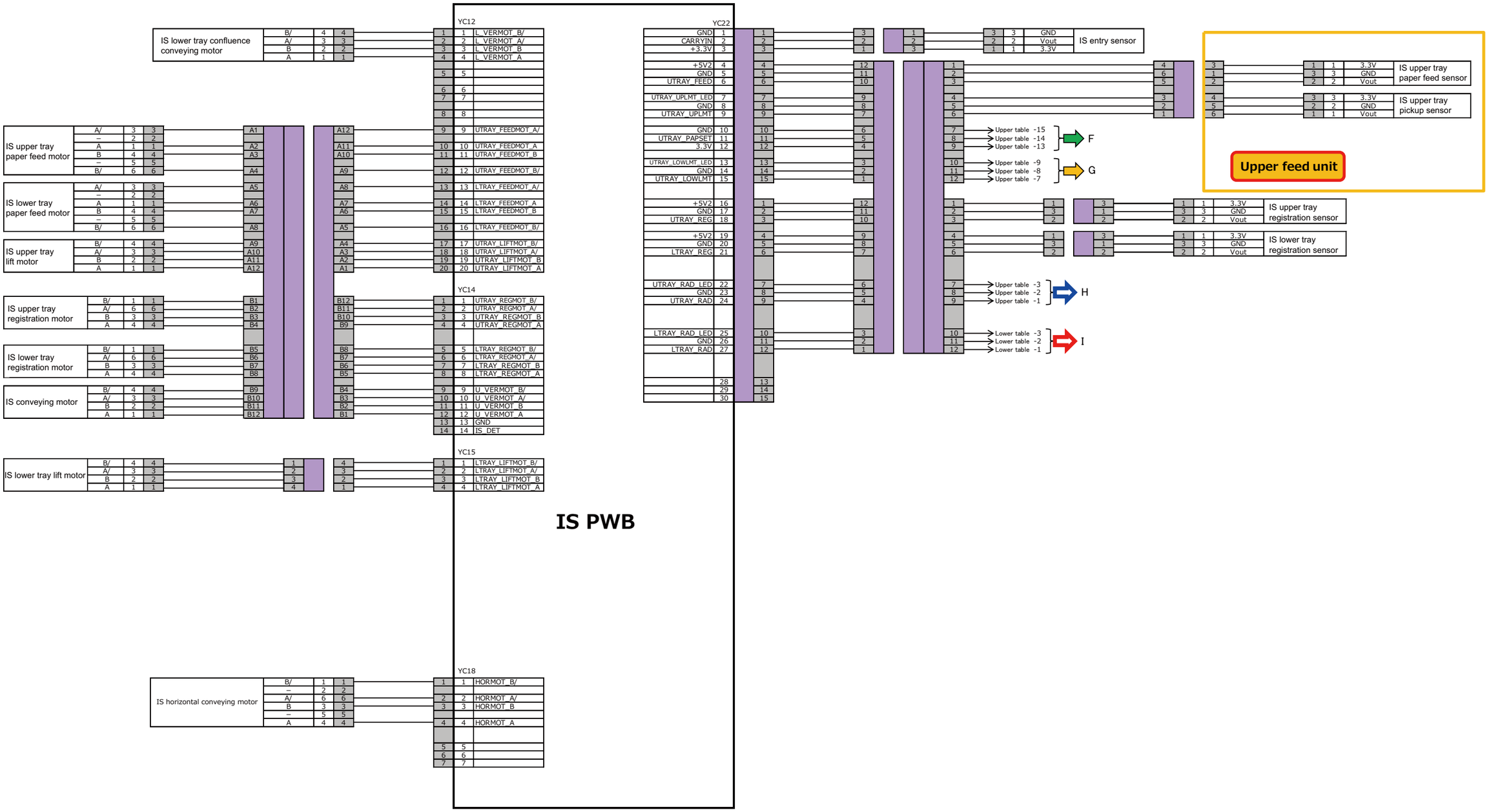
IS lower tray confluence conveying motor
IS upper tray paper feed motor
IS lower tray paper feed motor
IS upper tray lift motor
IS upper tray registration motor
IS lower tray registration motor
IS conveying motor
IS lower tray lift motor
IS horizontal conveying motor
YC12
YC14
YC15
YC18
YC22
L_VERMOT_B/
L_VERMOT_A/
L_VERMOT_B
L_VERMOT_A
UTRAY_FEEDMOT_A/
UTRAY_FEEDMOT_A
UTRAY_FEEDMOT_B
UTRAY_FEEDMOT_B/
LTRAY_FEEDMOT_A/
LTRAY_FEEDMOT_A
LTRAY_FEEDMOT_B
LTRAY_FEEDMOT_B/
UTRAY_LIFTMOT_B/
UTRAY_LIFTMOT_A/
UTRAY_LIFTMOT_B
UTRAY_LIFTMOT_A
UTRAY_REGMOT_B/
UTRAY_REGMOT_A/
UTRAY_REGMOT_B
UTRAY_REGMOT_A
LTRAY_REGMOT_B/
LTRAY_REGMOT_A/
LTRAY_REGMOT_B
LTRAY_REGMOT_A
U_VERMOT_B/
U_VERMOT_A/
U_VERMOT_B
U_VERMOT_A
GND
IS_DET
LTRAY_LIFTMOT_B/
LTRAY_LIFTMOT_A/
LTRAY_LIFTMOT_B
LTRAY_LIFTMOT_A
HORMOT_B/
HORMOT_A/
HORMOT_B
HORMOT_A
GND
CARRYIN
+3.3V
+5V2
UTRAY_FEED
UTRAY_UPLMT_LED
UTRAY_UPLMT
UTRAY_PAPSET
3.3V
UTRAY_LOWLMT_LED
UTRAY_LOWLMT
UTRAY_REG
LTRAY_REG
UTRAY_RAD_LED
UTRAY_RAD
LTRAY_RAD_LED
LTRAY_RAD
IS entry sensor
Vout
IS upper tray paper feed sensor
IS upper tray pickup sensor
IS upper tray registration sensor
IS lower tray registration sensor
Upper table -15
Upper table -14
Upper table -13
Upper table -9
Upper table -8
Upper table -7
Upper table -3
Upper table -2
Upper table -1
Lower table -3
Lower table -2
Lower table -1
F
G
H
I
Upper feed unit
IS PWB

No.3

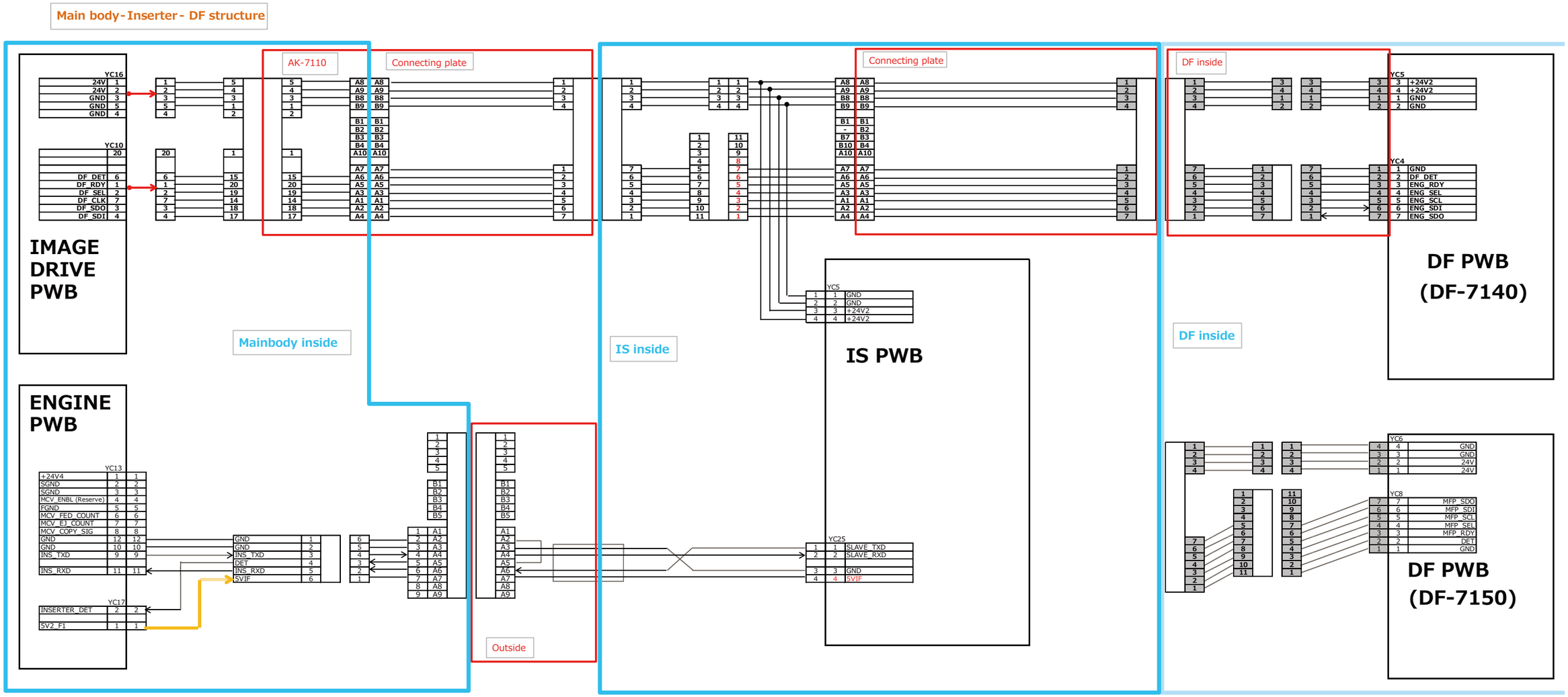
Main body - Inserter - DF structure
AK-7110
Connecting plate
Connecting plate
DF inside
IMAGE DRIVE PWB
YC16
24V
24V
GND
GND
GND
YC10
DF_DET
DF_RDY
DF_SEL
DF_CLK
DF_SDO
DF_SDI
Mainbody inside
IS inside
IS PWB
YC5
GND
GND
+24V2
+24V2
DF inside
DF PWB (DF-7140)
YC5
+24V2
+24V2
GND
GND
YC4
GND
DF_DET
ENG_RDY
ENG_SEL
ENG_SCL
ENG_SDI
ENG_SDO
ENGINE PWB
YC13
+24V4
SGND
SGND
MCV_ENBL (Reserve)
FGND
MCV_FED_COUNT
MCV_EJ_COUNT
MCV_COPY_SIG
GND
GND
INS_TXD
INS_RXD
YC17
INSERTER_DET
5V2_F1
GND
GND
INS_TXD
DET
INS_RXD
5VIF
YC25
SLAVE_TXD
SLAVE_RXD
GND
5VIF
Outside
YC6
GND
GND
24V
24V
YC8
MFP_SDO
MFP_SDI
MFP_SCL
MFP_SEL
MFP_RDY
DET
GND
DF PWB (DF-7150)

(16)Z folding unit (ZF-7100)

No.1

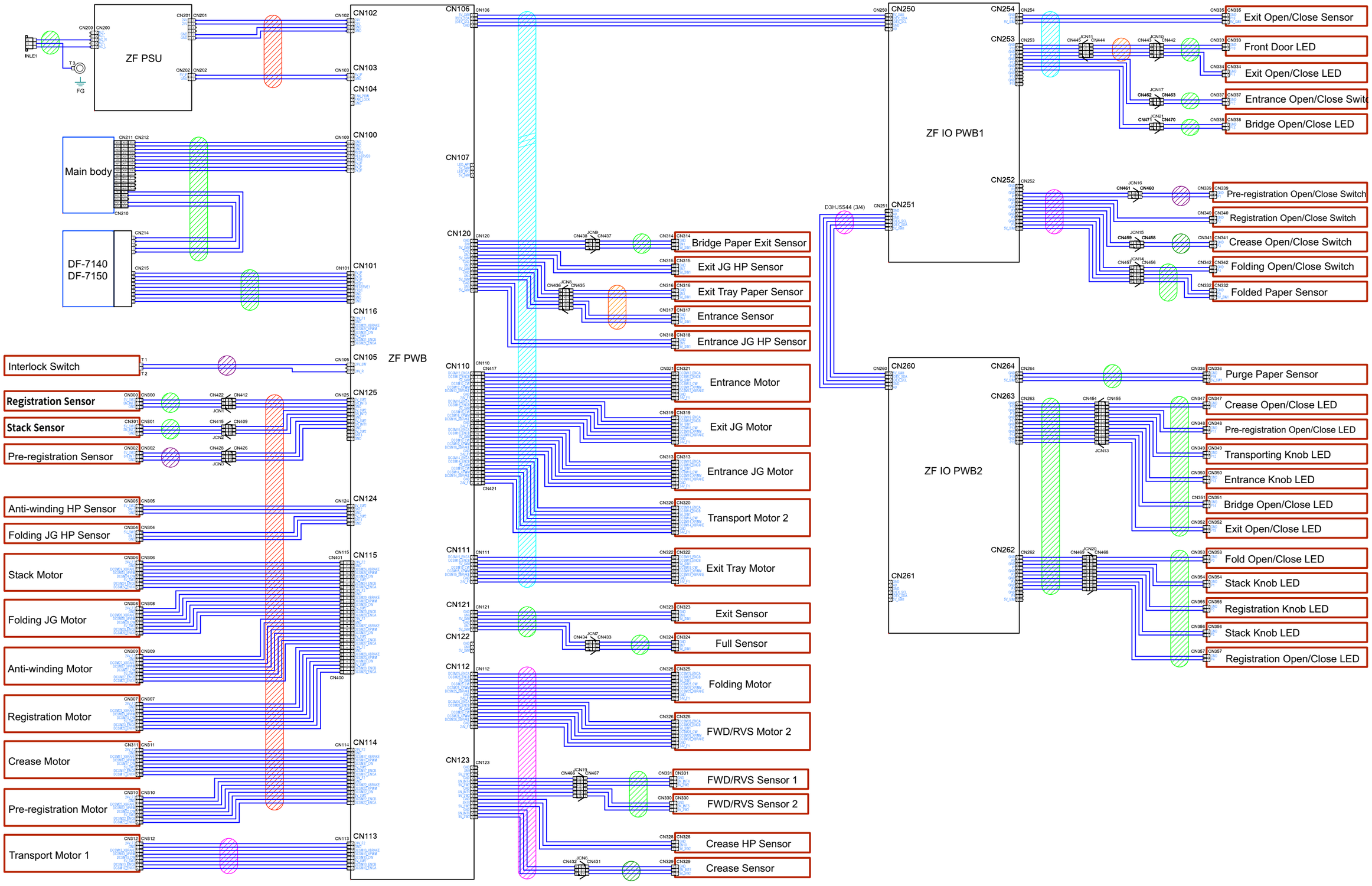

No.2

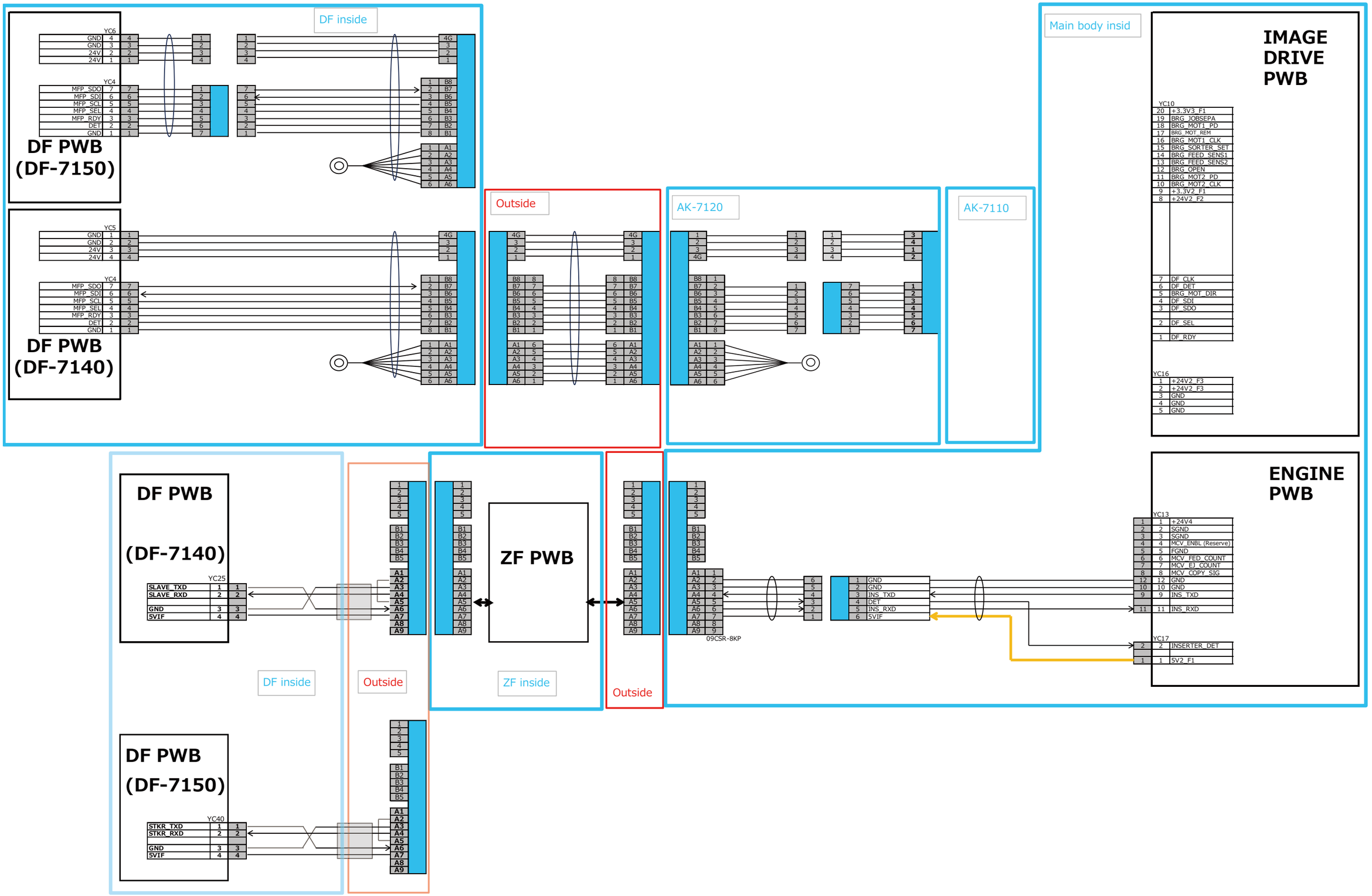
DF inside
DF PWB
(DF-7150)
YC6
GND 4
GND 3
24V 2
24V 1
YC4
MFP_SDO 7
MFP_SDI 6
MFP_SCL 5
MFP_SEL 4
MFP_RDY 3
DET 2
GND 1
DF PWB
(DF-7140)
YC5
GND 1
GND 2
24V 3
24V 4
YC4
MFP_SDO 7
MFP_SDI 6
MFP_SCL 5
MFP_SEL 4
MFP_RDY 3
DET 2
GND 1
Outside
AK-7120
AK-7110
Main body insid
IMAGE
DRIVE
PWB
YC10
20 +3.3V3_F1
19 BRG_JOBSEPA
18 BRG_MOT1_PD
17 BRG_MOT_REM
16 BRG_MOT1_CLK
15 BRG_SORTER_SET
14 BRG_FEED_SENS1
13 BRG_FEED_SENS2
12 BRG_OPEN
11 BRG_MOT2_PD
10 BRG_MOT2_CLK
9 +3.3V2_F1
8 +24V2_F2
7 DF_CLK
6 DF_DET
5 BRG_MOT_DIR
4 DF_SDI
3 DF_SDO
2 DF_SEL
1 DF_RDY
YC16
1 +24V2_F3
2 +24V2_F3
3 GND
4 GND
5 GND
DF PWB
(DF-7140)
YC25
SLAVE_TXD 1
SLAVE_RXD 2
GND 3
5VIF 4
DF PWB
(DF-7150)
YC40
STKR_TXD 1
STKR_RXD 2
GND 3
5VIF 4
DF inside
Outside
ZF PWB
ZF inside
Outside
09CSR-8KP
1 GND
2 GND
3 INS_TXD
4 DET
5 INS_RXD
6 5VIF
ENGINE
PWB
YC13
1 +24V4
2 SGND
3 SGND
4 MCV_ENBL (Reserve)
5 FGND
6 MCV_FED_COUNT
7 MCV_EJ_COUNT
8 MCV_COPY_SIG
12 GND
10 GND
9 INS_TXD
11 INS_RXD
YC17
2 INSERTER_DET
1 5V2_F1

AK-7100
AK-7110

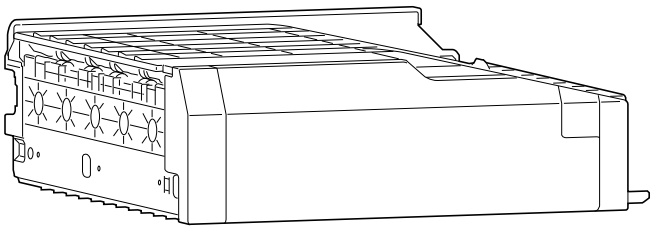

INSTALLATION GUIDE

GUIDE D'INSTALLATION

GUÍA DE INSTALACION

INSTALLATIONSANLEITUNG

GUIDA ALL'INSTALLAZIONE

安装手册

설치안내서

設置手順書

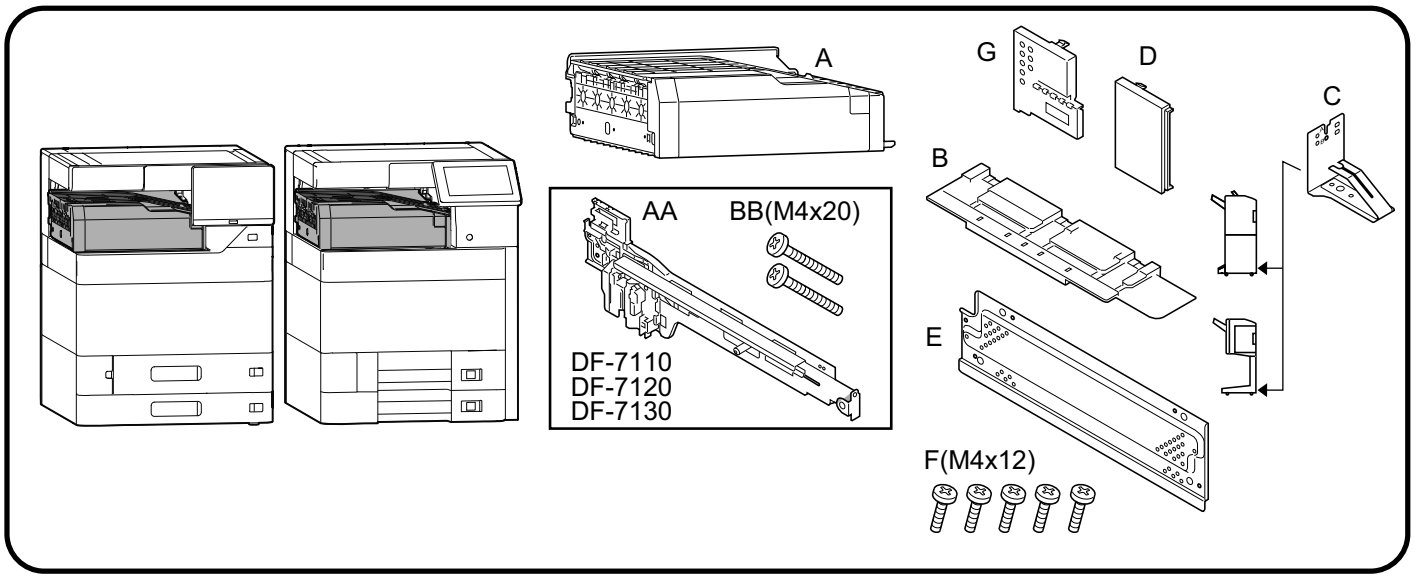

(EN) Be sure to remove any tape and/or cushioning materials from the parts supplied.
(FR) Veillez à retirer les morceaux de bande adhésive et/ou les matériaux de rembourrage des pièces fournies.
(ES) Asegúrese de quitar todas las cintas y/o material amortiguador de las partes suministradas.
(DE) Stellen Sie sicher, dass sämtliche Klebebänder und/oder Polstermaterial von den gelieferten Teilen entfernt wurden.
(IT) Rimuovere tutti i nastri adesivi e/o i materiali di protezione dalle parti fornite.
(ZHCN) 如果附属品上带有固定胶带、缓冲材料时，请务必揭下。
(KO) 동봉품에 고정 테이프 , 완충재가 붙어 있는 경우에는 반드시 제거하십시오.
(JA) 同梱品に固定テープ、緩衝材がついている場合は、必ず取り外すこと。

(EN) While the illustrations in this installation guide are for the MFP models, contents of the installation work are common for the MFP and printer models.
(FR) Les illustrations de ce guide d' installation concernent les modèles MFP, mais les interventions d' installation sont communes aux modèles MFP et imprimantes.
(ES) Aunque las ilustraciones de esta guía de instalación hacen referencia a los modelos MFP, el contenido de los procedimientos de instalación es el mismo para los modelos MFP y de impresora.
(DE) Obwohl die Abbildungen in dieser Installationsanleitung sich auf MFPs beziehen, ist die Vorgehensweise für MFPs und Drucker die gleiche.
(IT) Sebbene le illustrazioni contenute in questa guida di installazione siano relative a modelli MFP, i contenuti della procedura di installazione sono gli stessi per MFP e stampanti.
(ZHCN) 安装步骤中的视图是 MFP 机型，不过 MFP 和打印机的安装步骤是相同的。
(KO) 이 설치 가이드는 MFP모델용이지만, 설치 작업은 MFP와 프린터 공통입니다.
(JA) 設置手順書内のイラストは、MFP ですが、設置作業は MFP/ プリンター共通です。

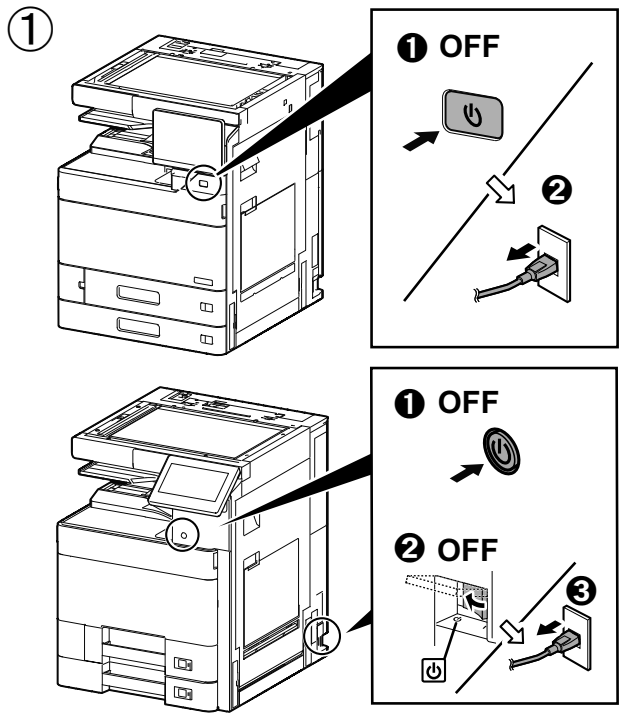

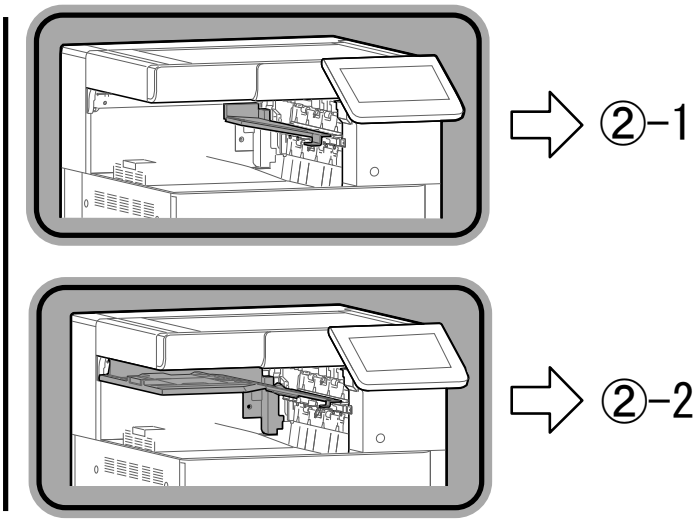

②–1

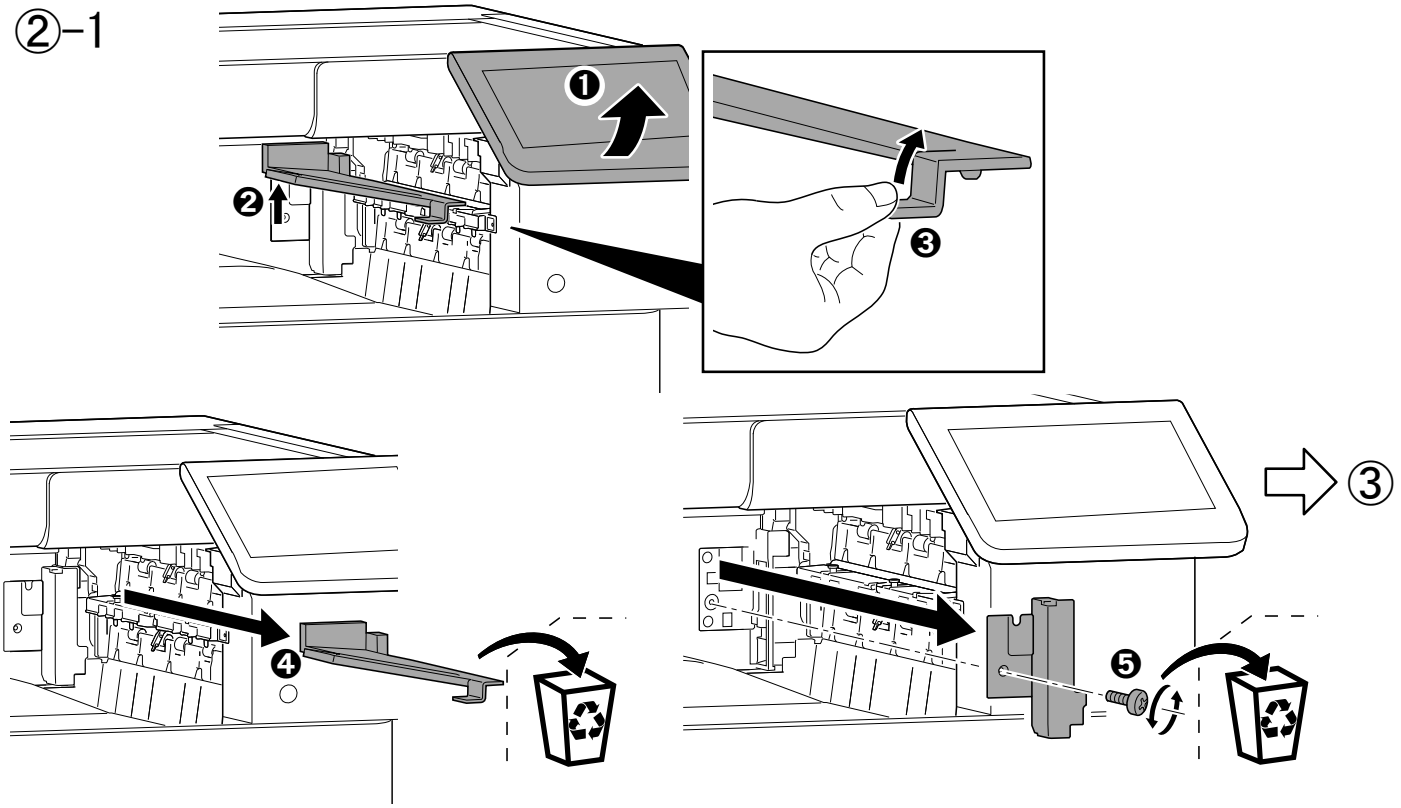

②–2

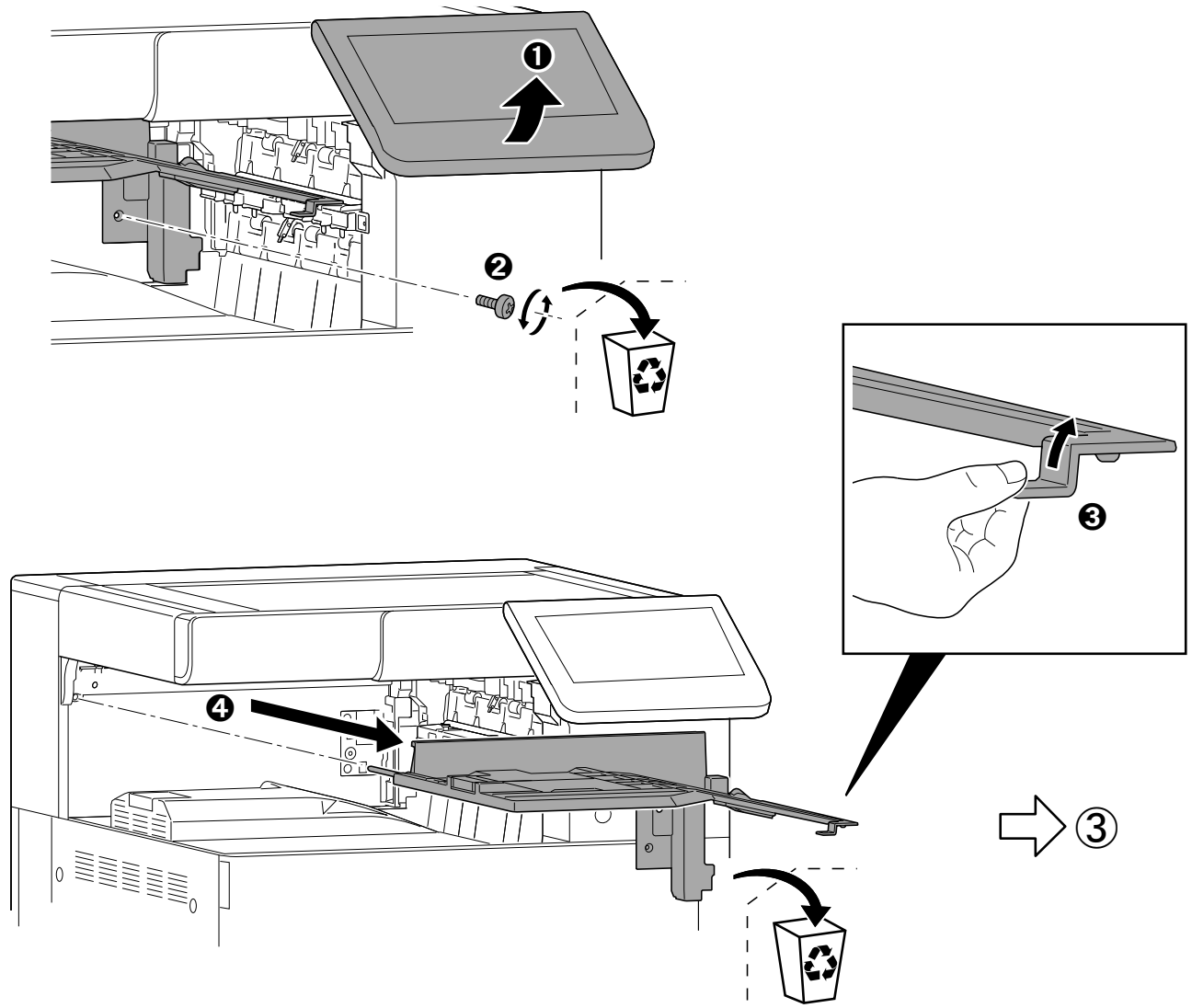

③

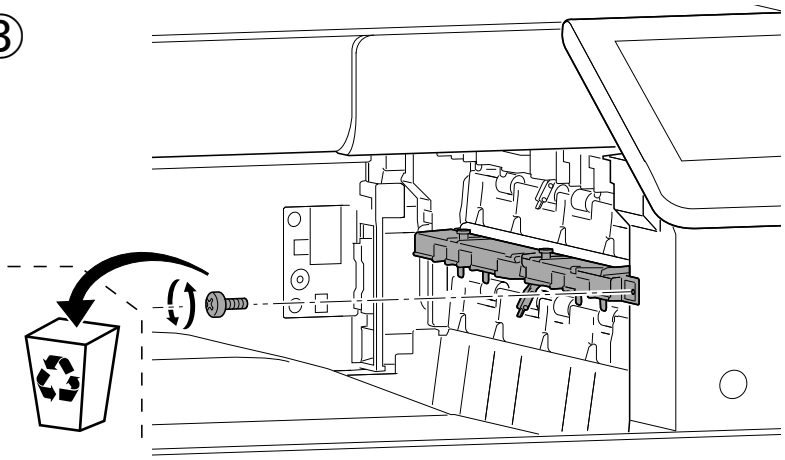

④

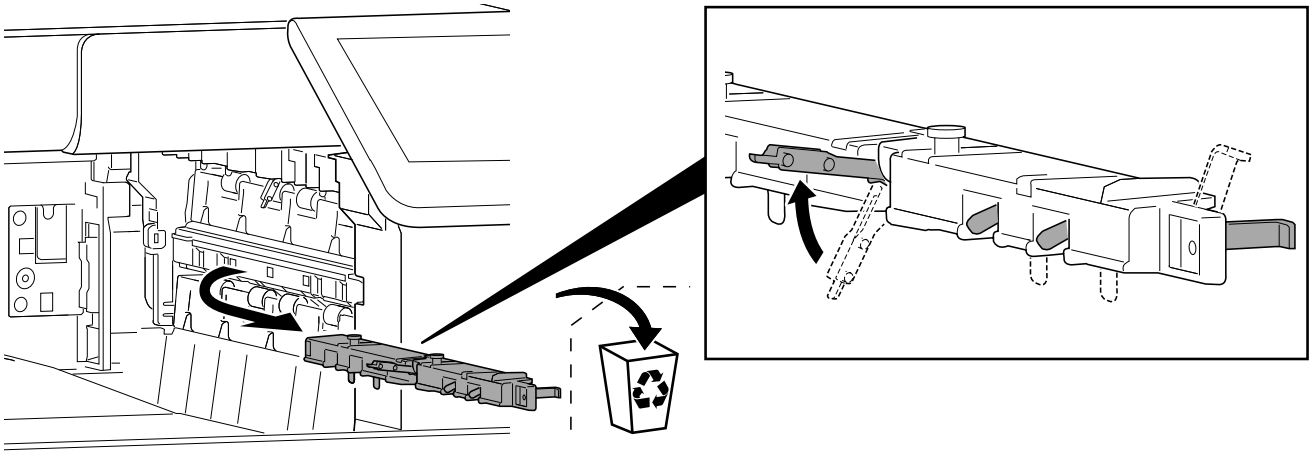

⑤

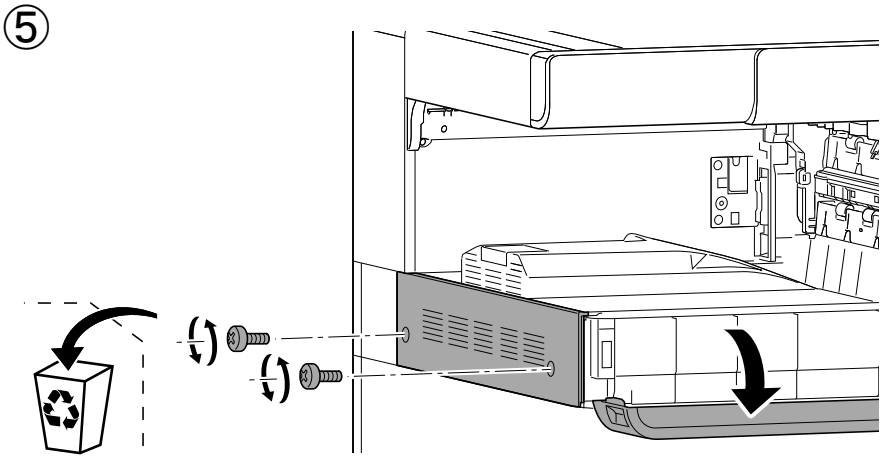

⑥

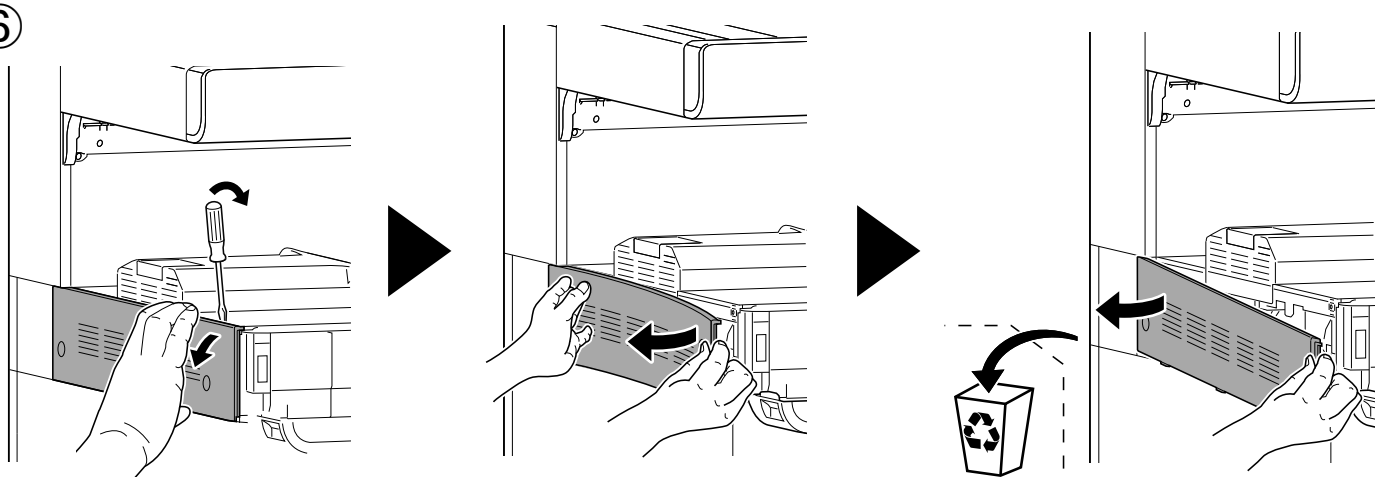

⑦

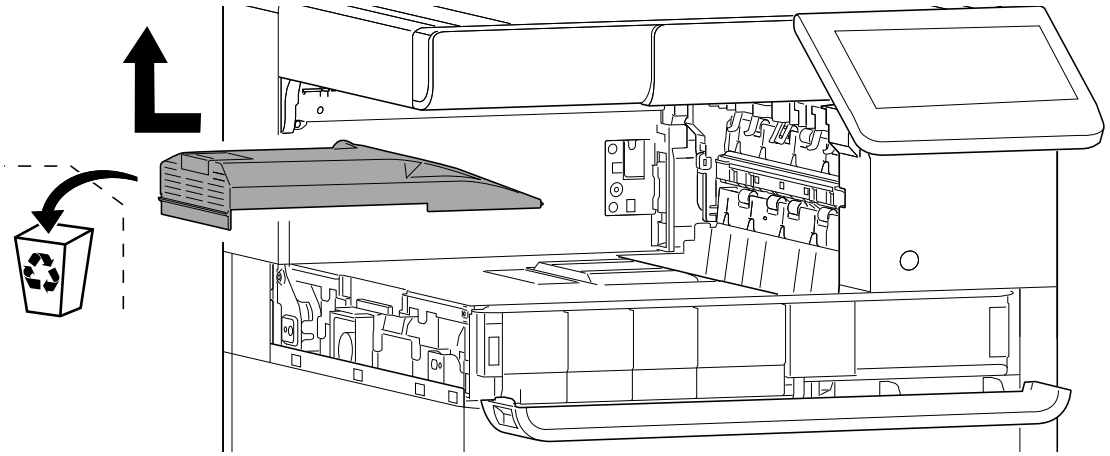

⑧

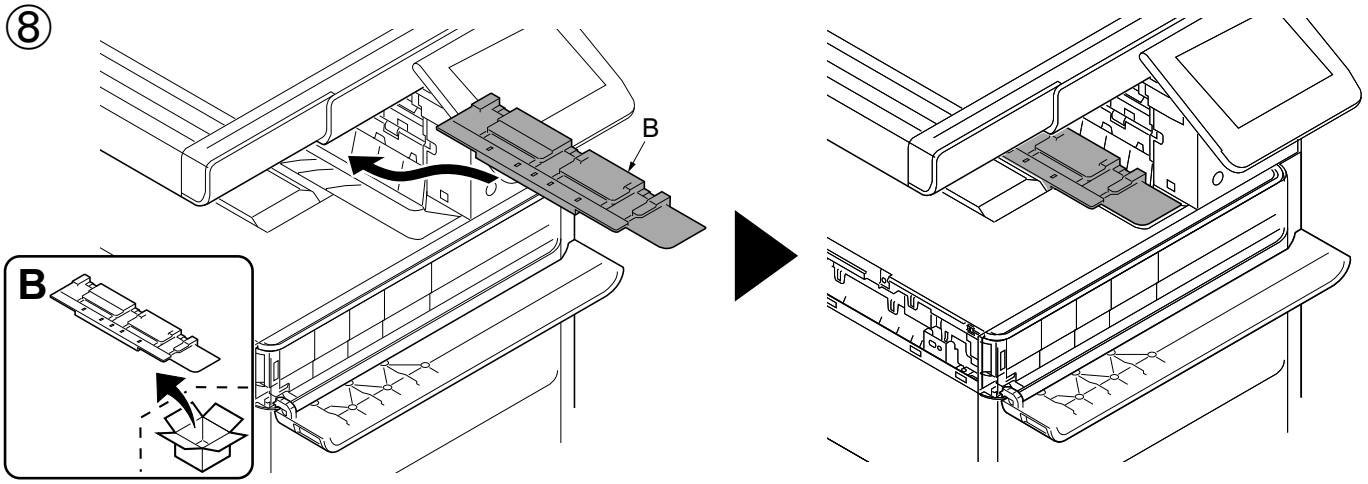

⑨

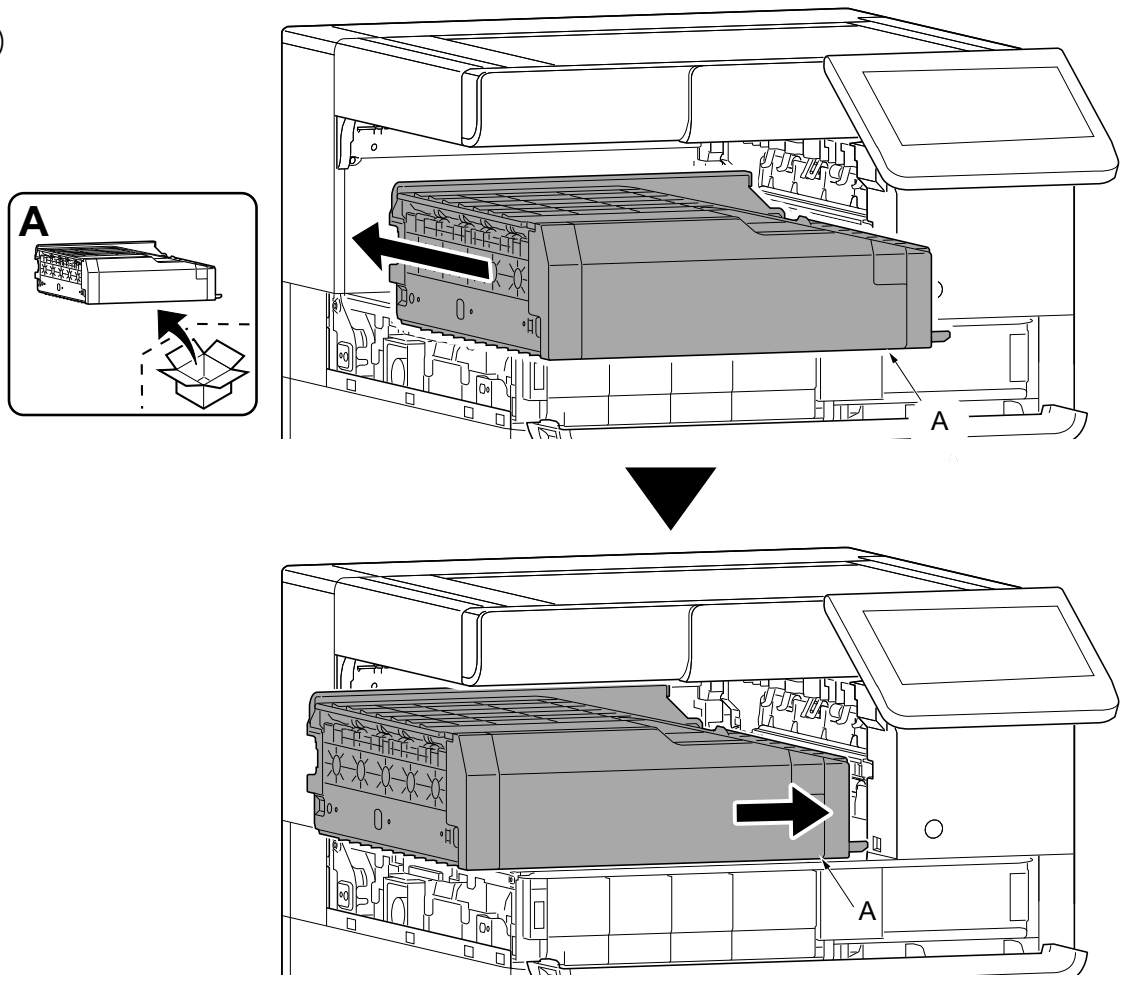

⑩

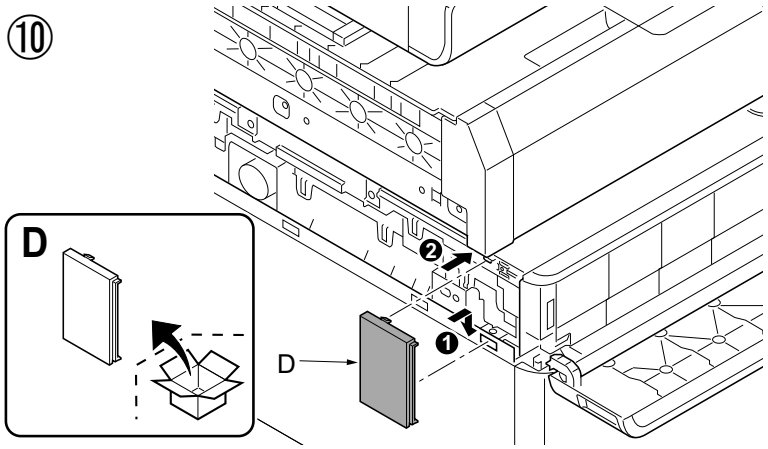
D
D

⑪

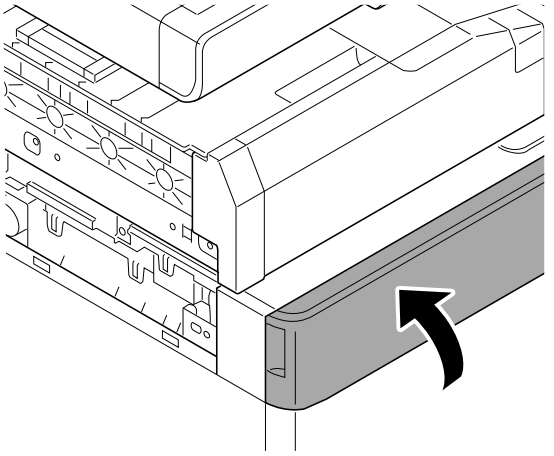

⑫

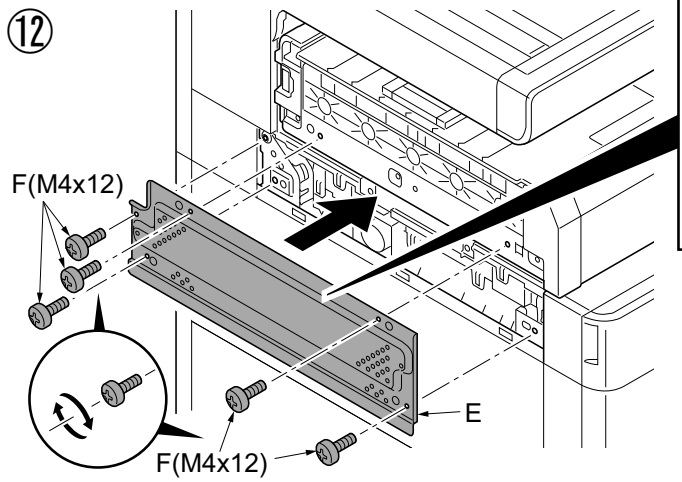
F(M4x12)
E
F(M4x12)

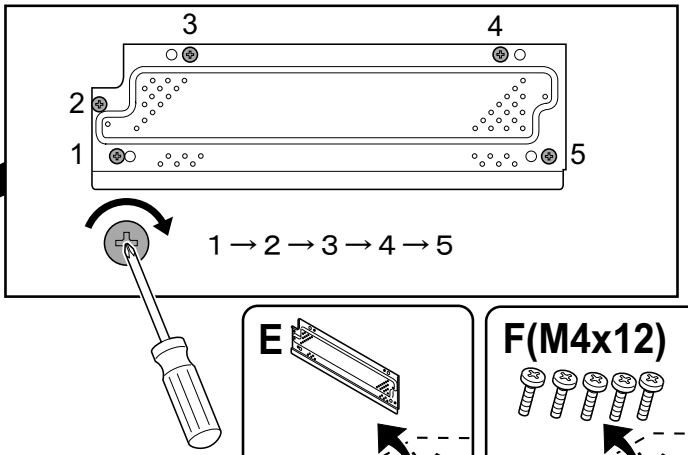
3
4
2
1
5
1 → 2 → 3 → 4 → 5

E
F(M4x12)

⑬

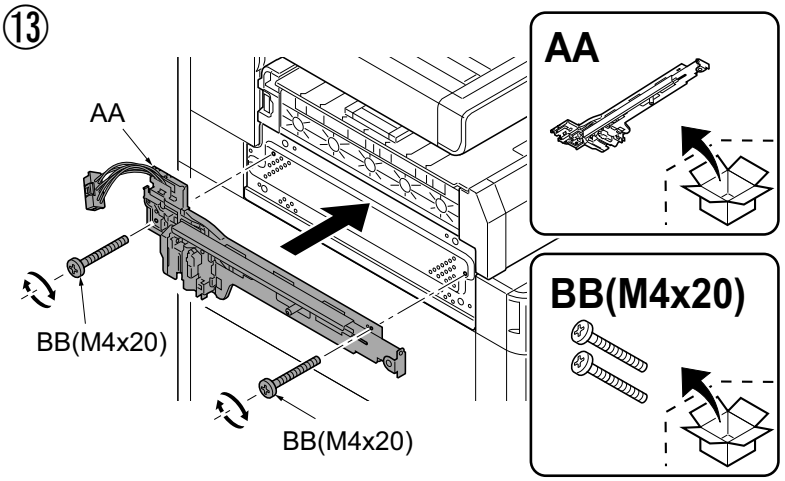
AA
BB(M4x20)
BB(M4x20)

AA

BB(M4x20)

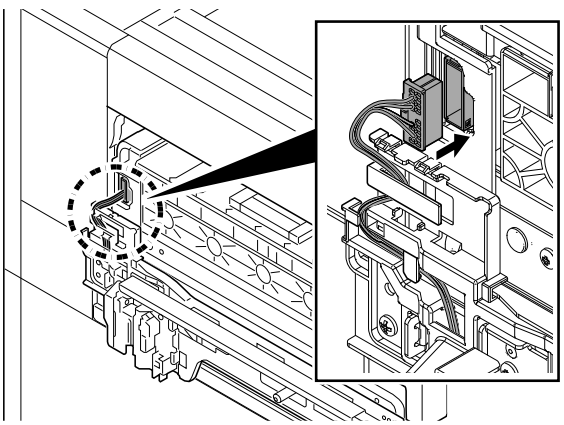

⑭

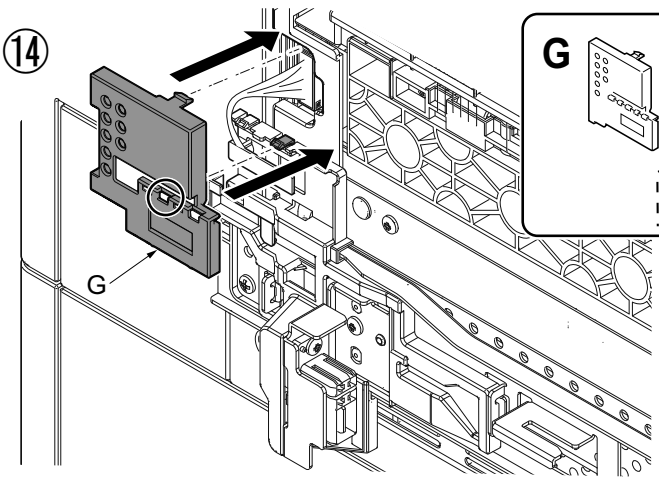
G

G

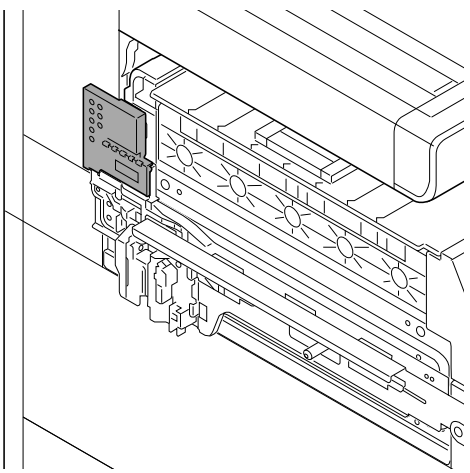


303RG5671102

AK-7120
ZF-7100



INSTALLATION GUIDE

GUIDE D'INSTALLATION

GUÍA DE INSTALACION

INSTALLATIONSANLEITUNG

GUIDA ALL'INSTALLAZIONE

安装手册

설치안내서

設置手順書

(EN) The flow of the installation. (DE) Montageablauf. (KO) 설치 순서
(FR) Déroulement de l’ installation. (IT) Procedura di installazione. (JA) 設置の流れ
(ES) Procedimiento de instalación. (ZHCN) 安装流程

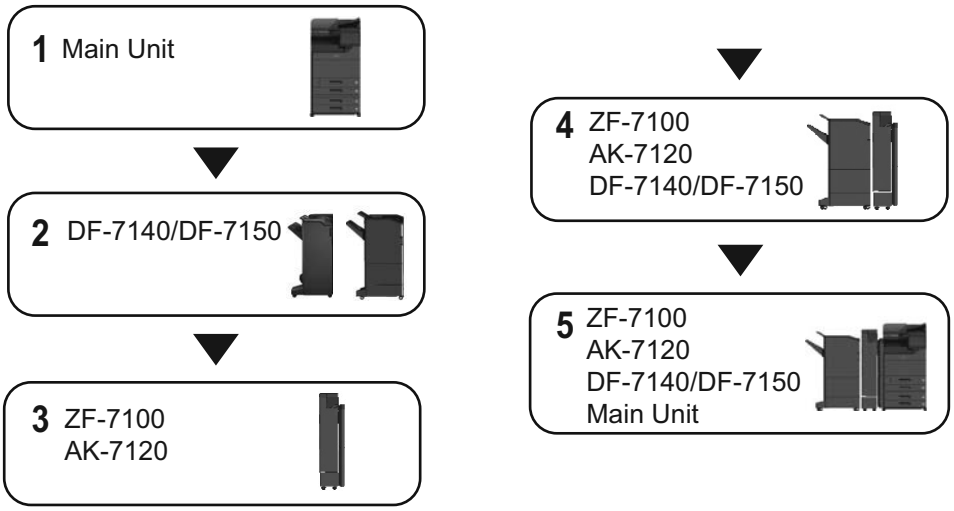

(EN) Be sure to remove any tapes and/or cushioning materials from the parts supplied.

(FR) Veillez à retirer les morceaux de bande adhésive et/ou les matériaux de rembourrage des pièces fournies.

(ES) Asegúrese de quitar todas las cintas y/o material amortiguador de las partes suministradas.

(DE) Stellen Sie sicher, dass sämtliche Klebebänder und/oder Polstermaterial von den gelieferten Teilen entfernt wurden.

(IT) Rimuovere tutti i nastri adesivi e/o i materiali di protezione dalle parti fornite.

(ZHCN) 如果附属品上带有固定胶带，缓冲材料时，请务必揭下。

(KO) 동봉품에 고정 테이프 , 완충재가 붙어 있는 경우에는 반드시 제거하십시오.

(JA) 同梱品に固定テープ、緩衝材がついている場合は、必ず取り外すこと。

(EN) The following items are necessary for installing ZF-7100 and AK-7120.
AK-7110, DF-7140/DF-7150

(FR) Les éléments suivants sont nécessaires pour l'installation de ZF-7100/AK-7120.
AK-7110, DF-7140/DF-7150

(ES) Se necesitan los siguientes elementos para instalar ZF-7100/AK-7120.
AK-7110, DF-7140/DF-7150

(DE) Die folgenden Gegenstände sind für die Installation des ZF-7100/AK-7120 erforderlich.
AK-7110, DF-7140/DF-7150

(IT) Per l’ installazione di ZF-7100/AK-7120 sono richiesti i seguenti elementi.
AK-7110, DF-7140/DF-7150

(ZHCN) 以下是安装 ZF-7100 和 AK-7120 的必需选购件。
AK-7110, DF-7140/DF-7150

(KO) F-7100 및 AK-7120을 설치하려면 다음 항목이 필요합니다.
AK-7110, DF-7140/DF-7150

(JA) ZF-7100 と AK-7120 を設置するには、以下のオプションが必要です。
AK-7110、DF-7140/DF-7150

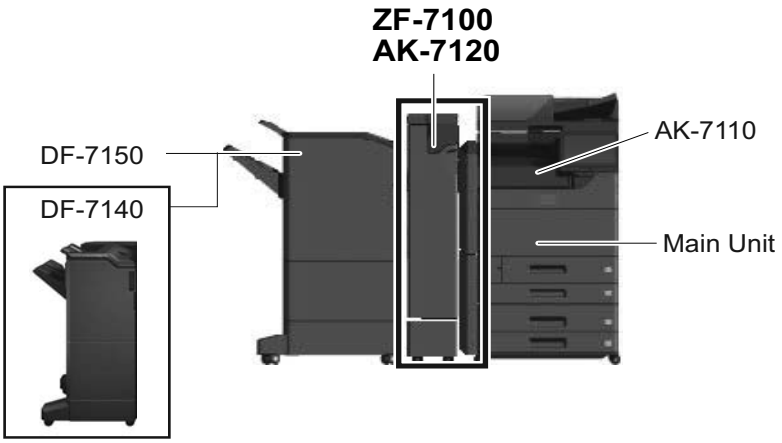

AK-7120

A

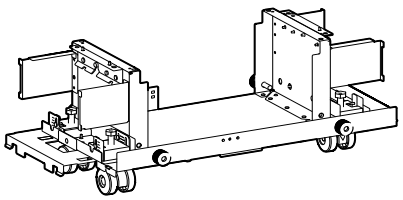

B

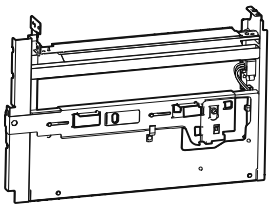

C

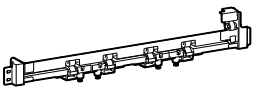

D

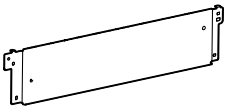

E

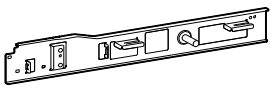

F

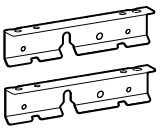

G

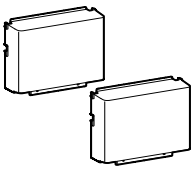

H-1

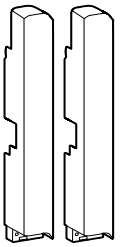

H-2

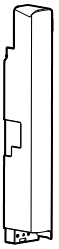

H-3

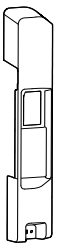

I

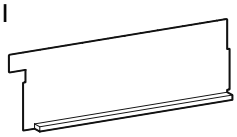

J



K

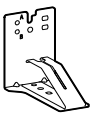

L

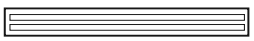

M



N



O

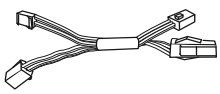

P

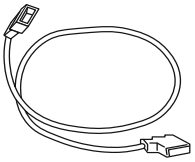

Q



R(M3x8)



S（M4x8）

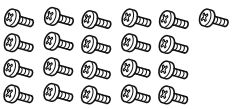

T（M4x10TP）



U（M4x10）



V(M3x8TP)



W(Pin)



ZF-7100

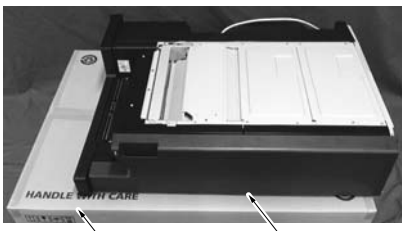

ZF-7100

Packaging carton
(ZF-7100)

ZF-7100-A



ZF-7100-B（M3x8）



ZF-7100-C

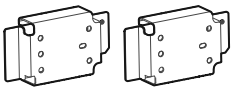

ZF-7100-D

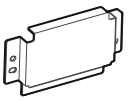

ZF-7100-E



ZF-7100-F



ZF-7100-G(M4x8)

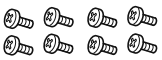

ZF-7100-H(Pin)



AK-7110

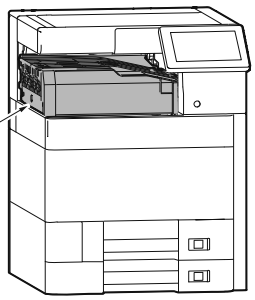

AK-7110

AK-7110-A

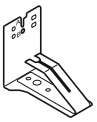

For DF-7140/DF-7150

DF-7140

DF-7140

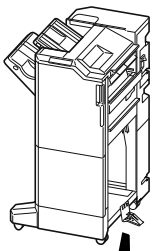

DF-7140-A(M4x8)

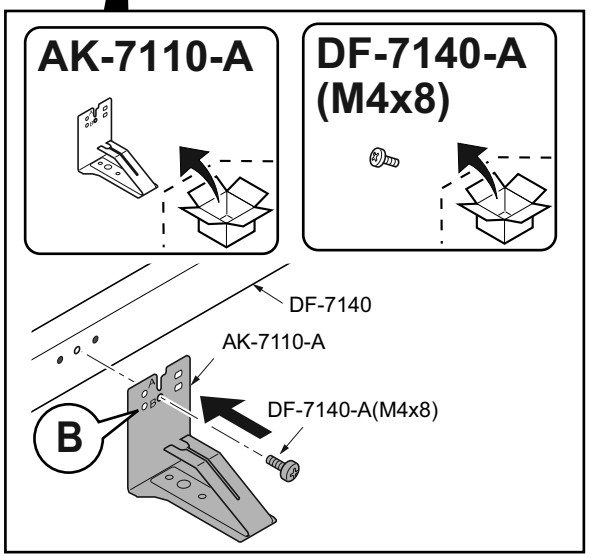

DF-7150

DF-7150

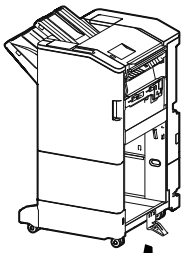

DF-7150-A(M4x8)

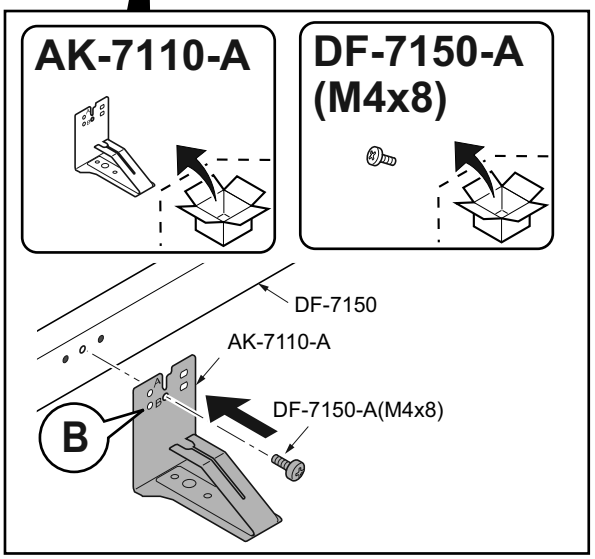

(EN) In case if DP-7160 or DP-7170 is installed on the main unit, remove the strap (a) by the procedure below and attach the strap Q.

(FR) Si DP-7160 ou DP-7170 est installé sur l’ unité principale, retirez la bande (a) en suivant la procédure ci-dessous et fixez la bande Q.

(ES) En caso de que DP-7160 o DP-7170 esté instalado en la unidad principal, quite la correa (a) siguiendo el procedimiento de abajo y ponga la correa Q.

(DE) Sollte DP-7160 oder DP-7170 am Gerät installiert sein, muss wie unten beschrieben Halterung (a) entfernt und Halterung Q angebracht werden.

(IT) Se sull’ unità principale sono installati DP-7160 o DP-7170, rimuovere la cinghietta (a) con la seguente procedura e posizionare la cinghietta Q.

(ZHCN) 如果在主机上安装 DP-7160 或 DP-7170，请按照以下步骤取下 (a) 连接条，并安装 Q 连接条。

(KO) 본체에 DP-7160 또는 DP-7170을 장착한 경우 아래 절차에 따라 스트랩 (a)를 제거하고 스트랩 Q를 부착하십시오.

(JA) 機械本体に DP-7160 または DP-7170 を装着している場合は、下記の手順でストラップ (a) を取り外し、ストラップ Q を装着してください。

DP-7160/DP-7170

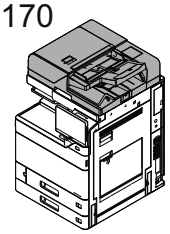

①

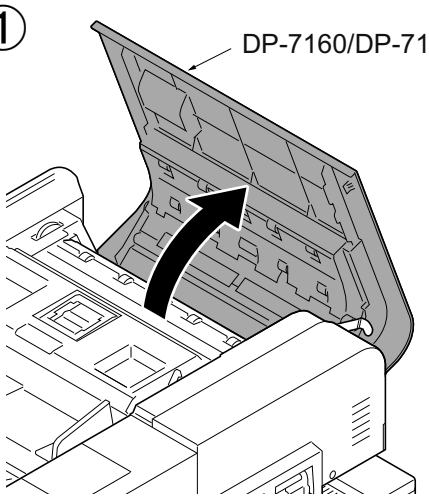

②

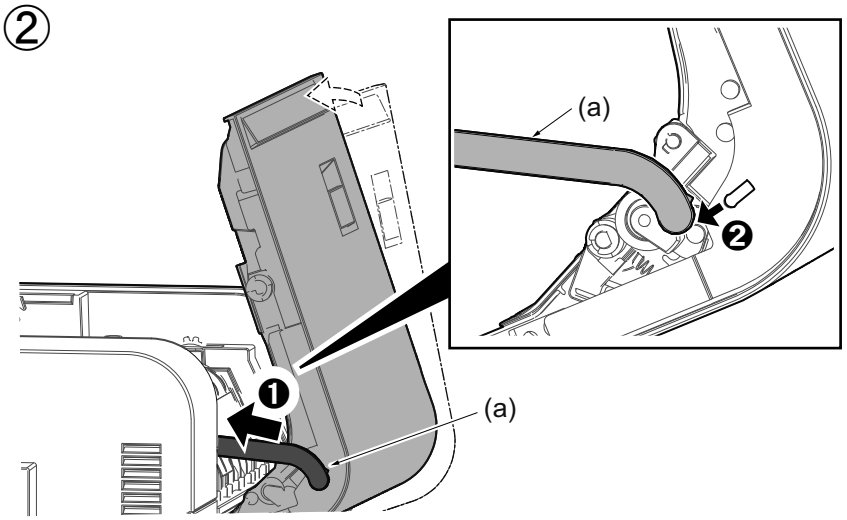

③

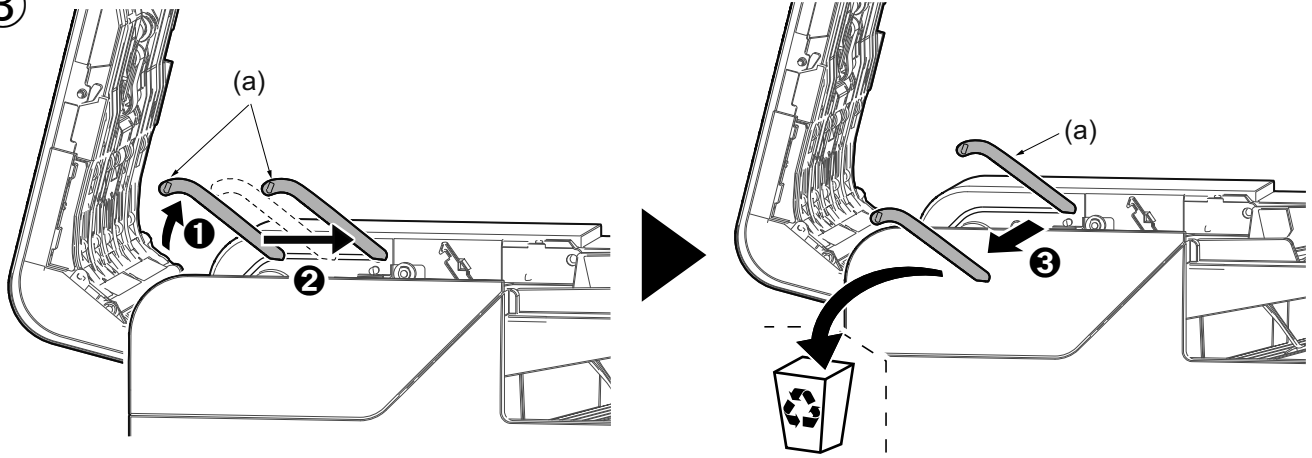

④

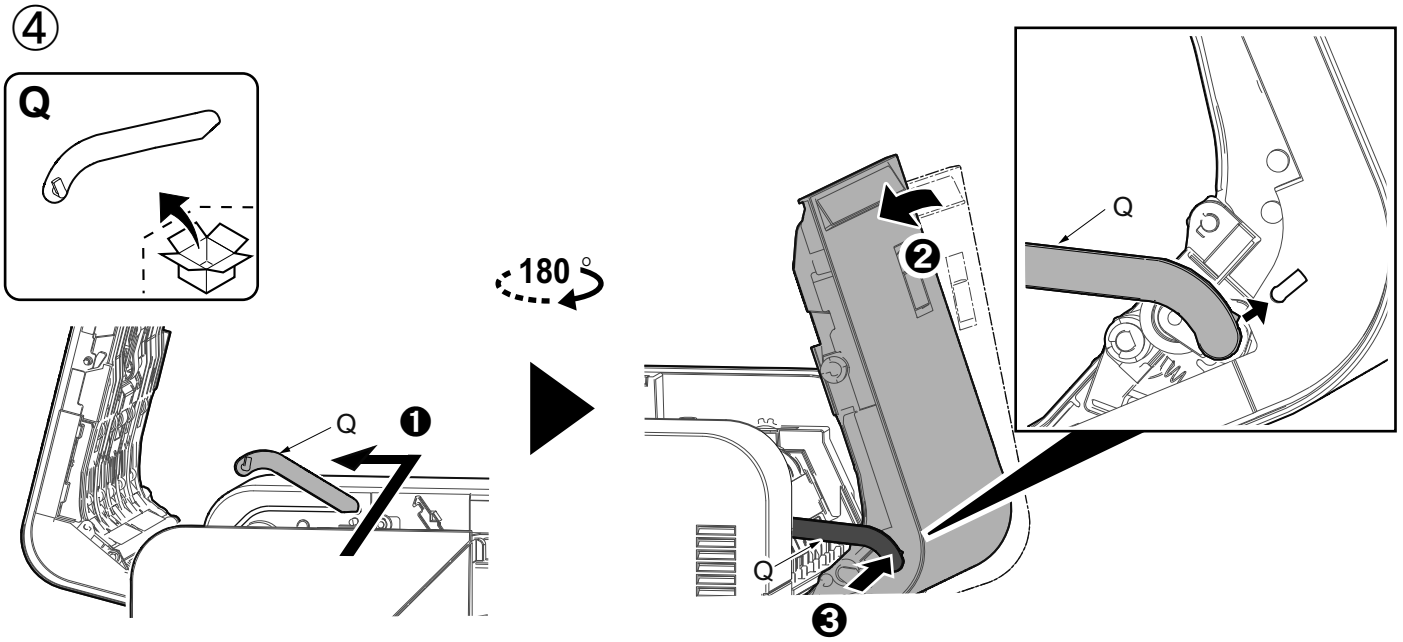

1 Main Unit



①

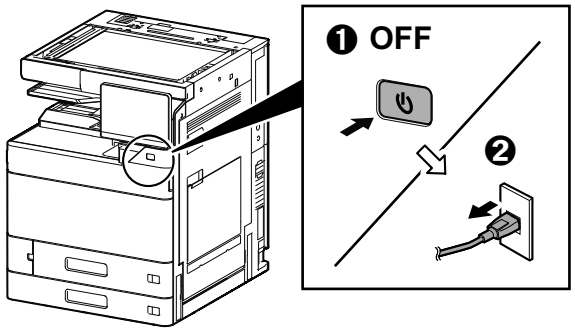

②

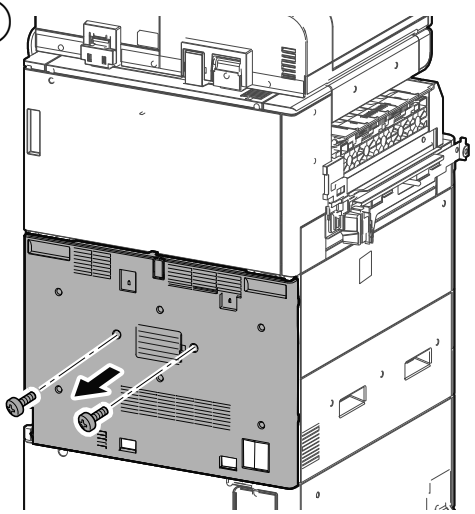

③

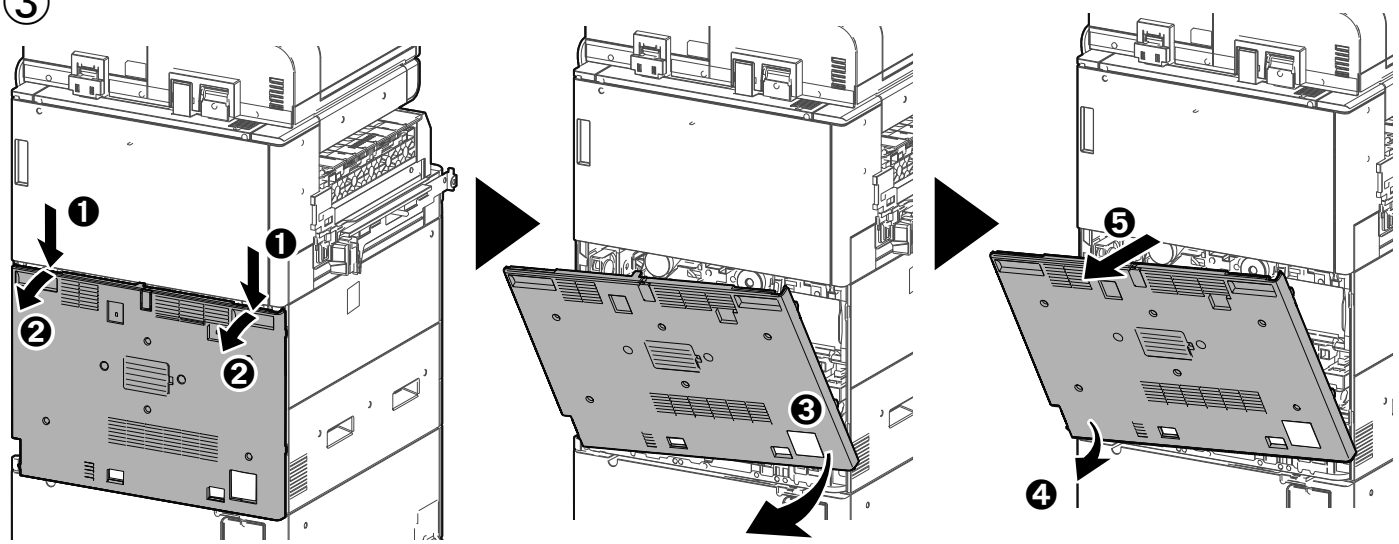

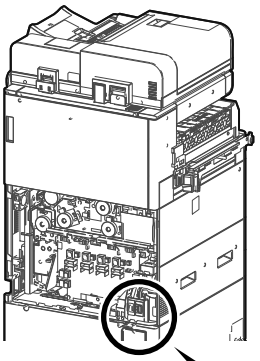

④

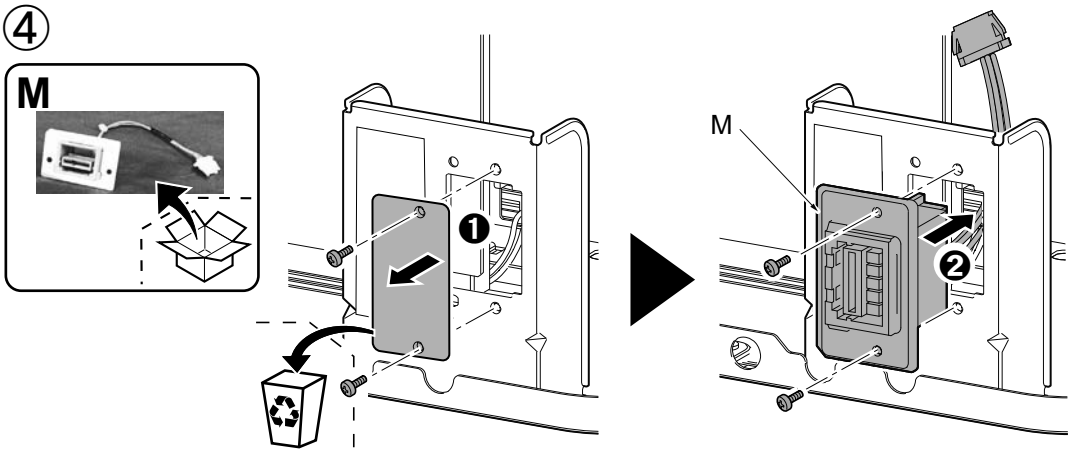

⑤

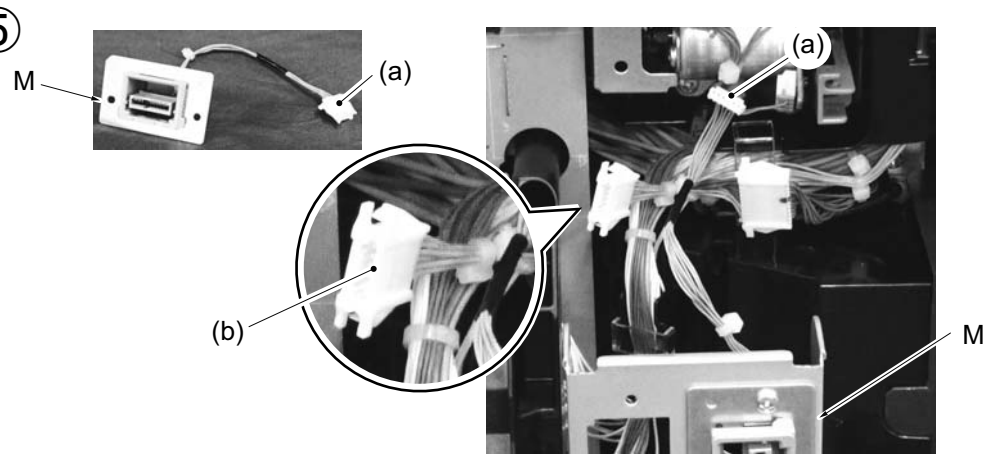

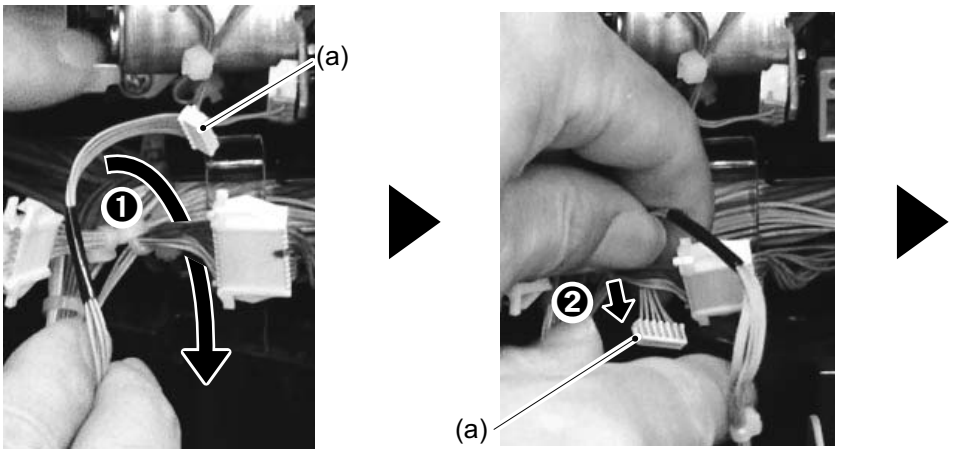

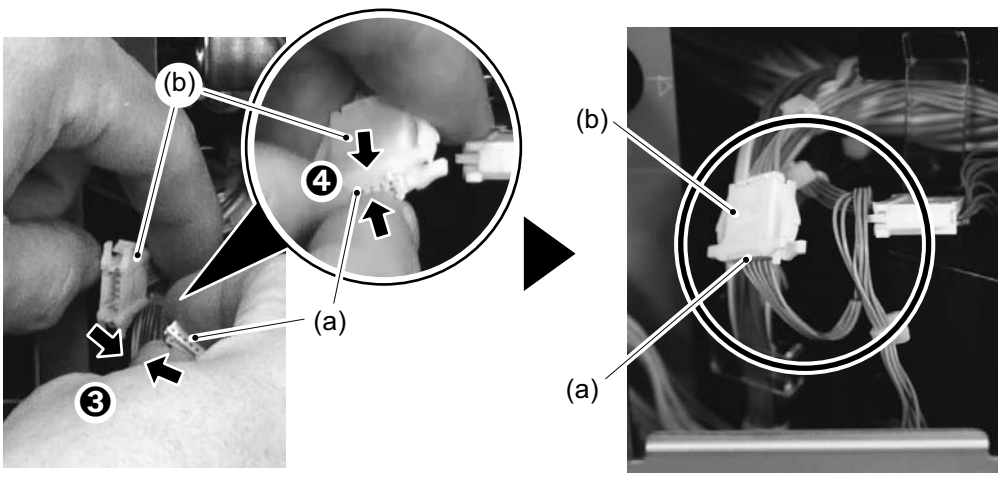

⑥

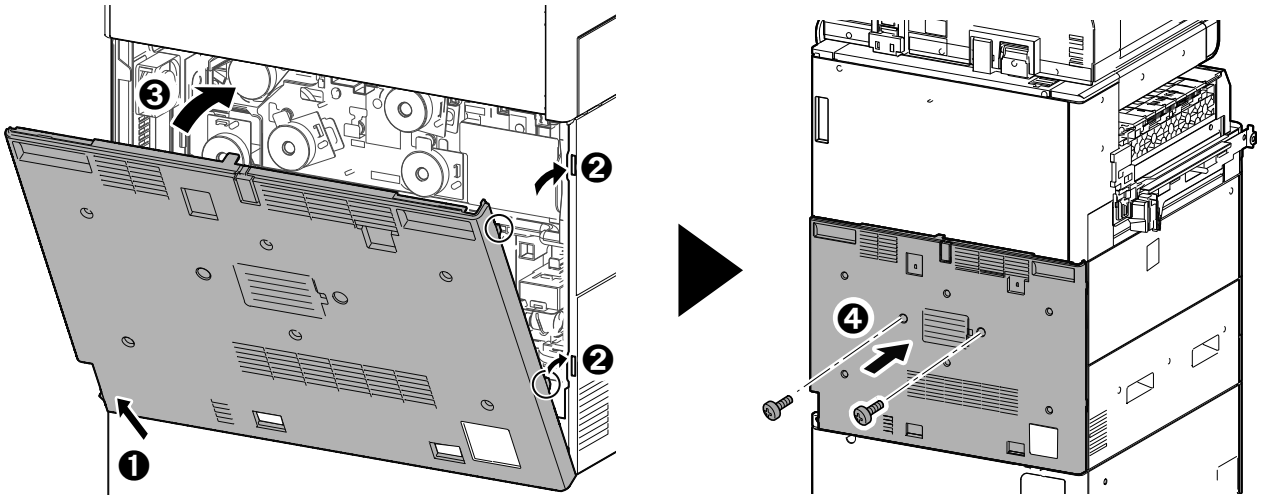

2 DF-7140/DF-7150 

DF-7140 ⇨ ①−1

DF-7150 ⇨ ②−1

DF-7140

①−1

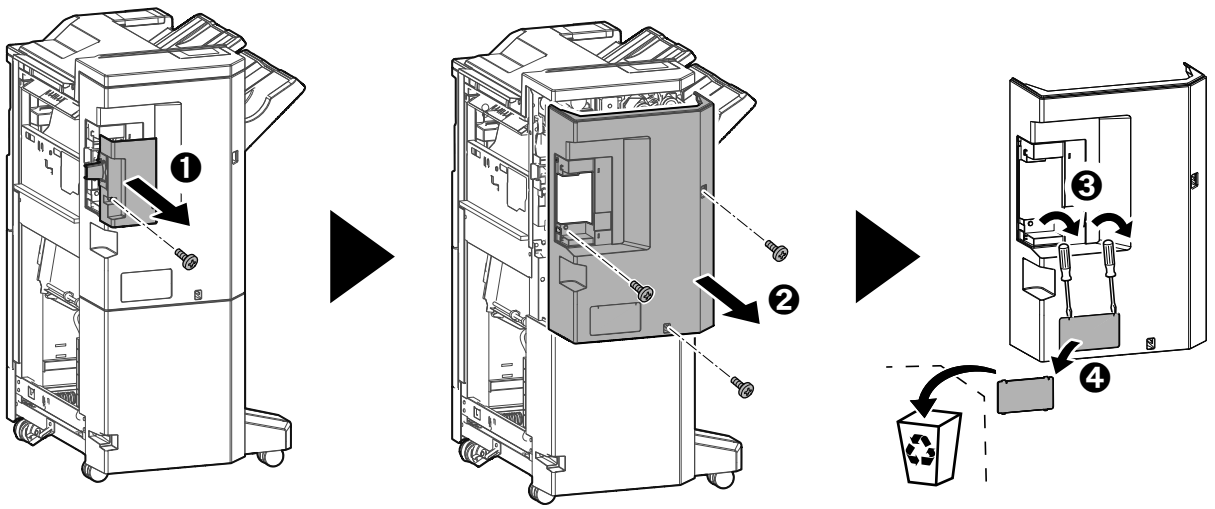

⇨ ③

DF-7150

②–1

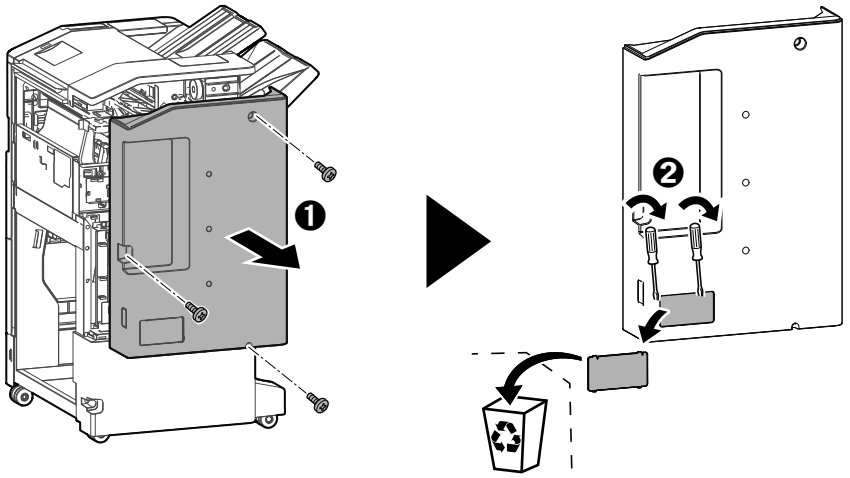

⇨ ③

DF-7140

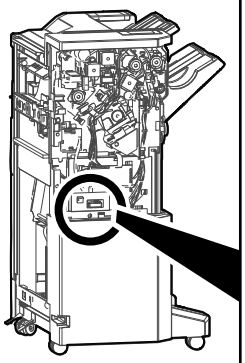

DF-7150

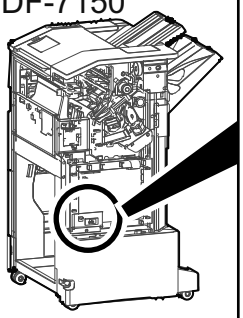

③

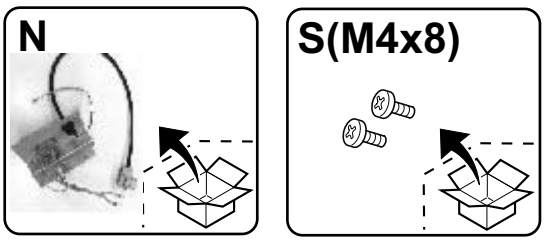

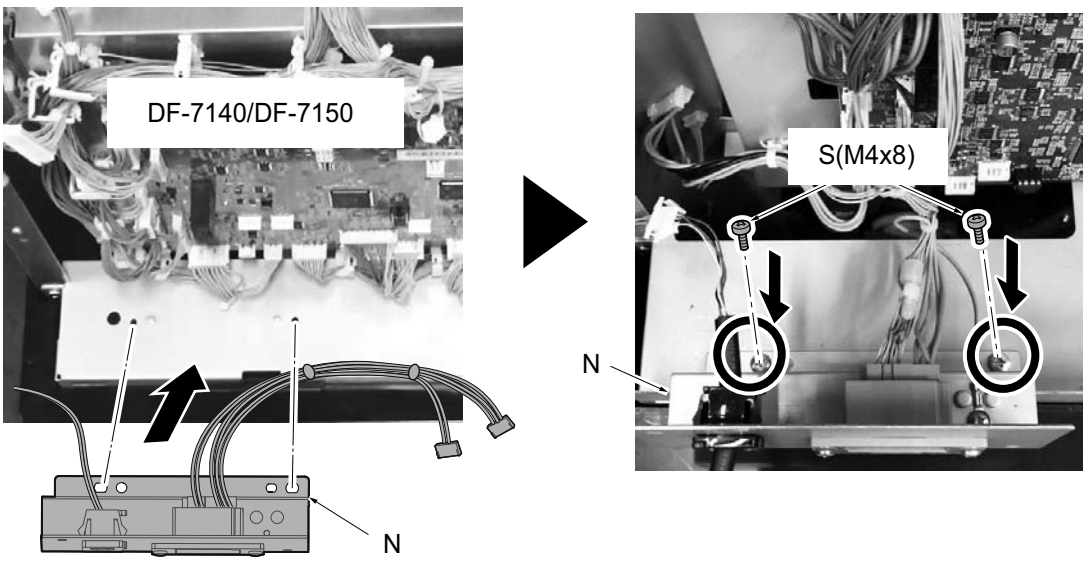

DF-7140 ⇨ ④–1

DF-7150 ⇨ ⑤–1

DF-7140

DP PWB : YC-4 / YC-5

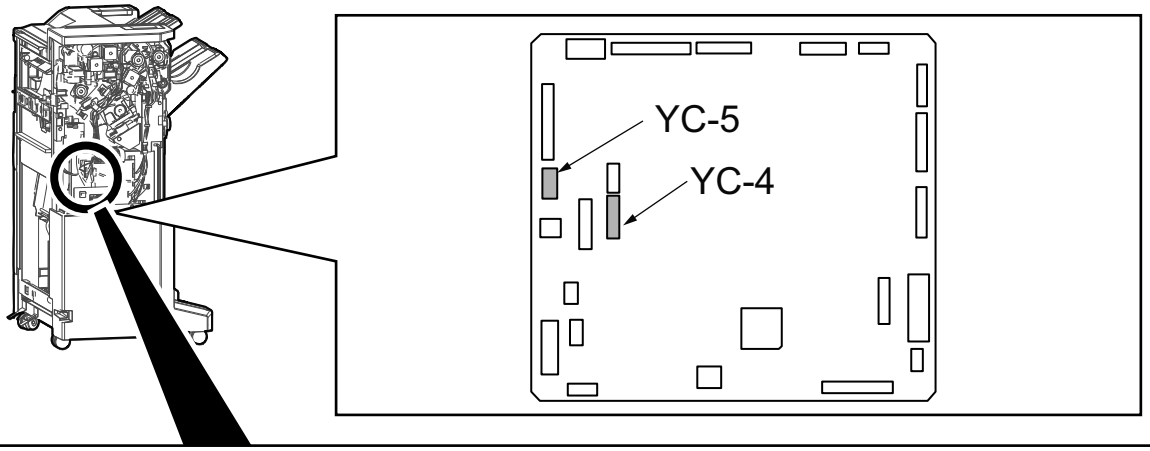

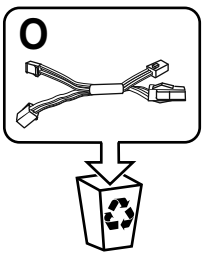

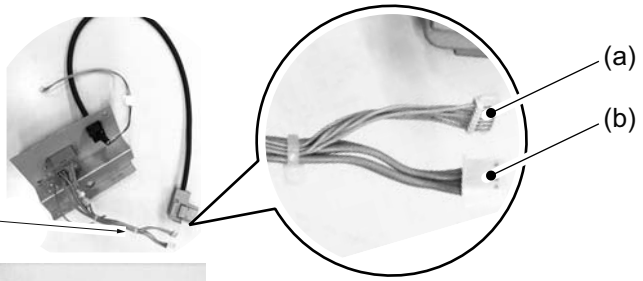

④−1

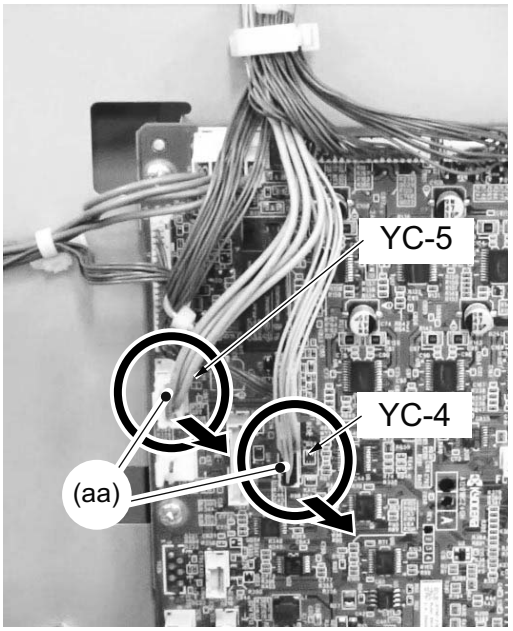

④−2

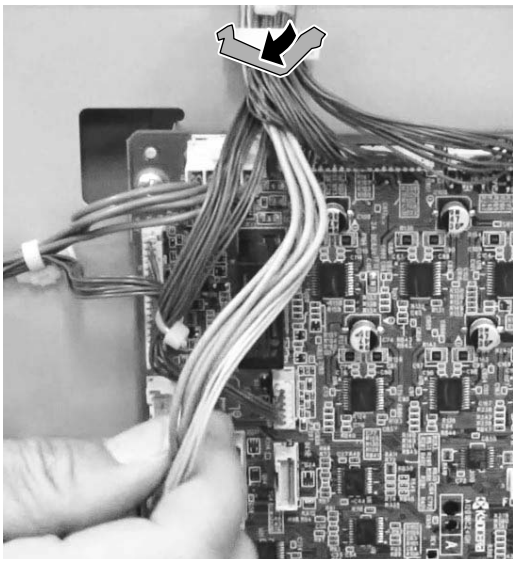

④−3

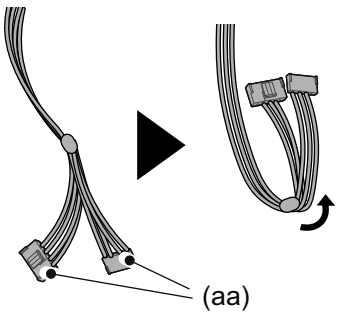

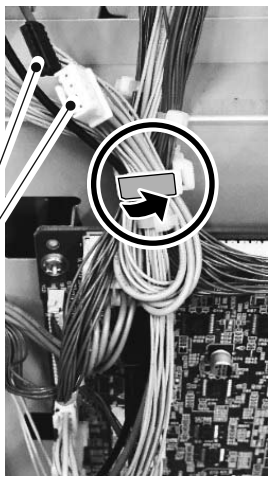

④−4

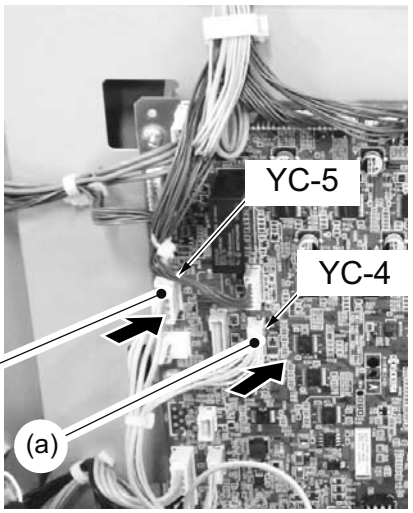

DF-7140

DP PWB : YC-25

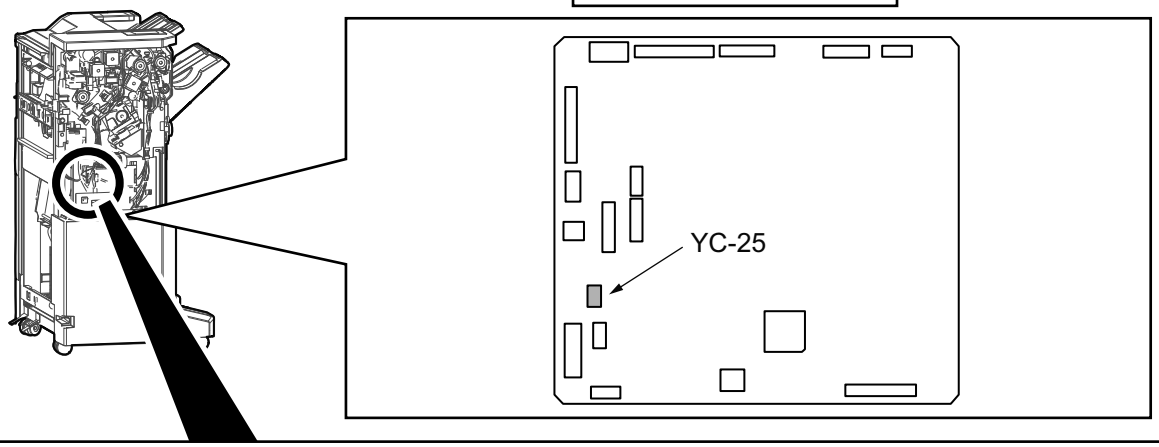

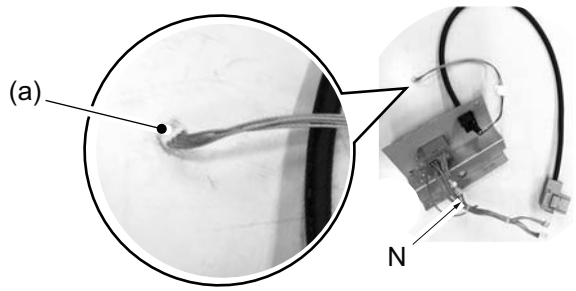

④–5

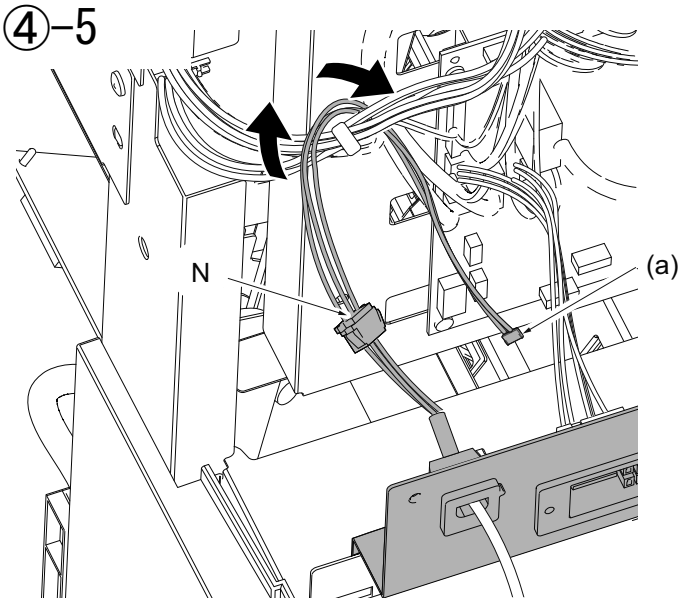

④–6

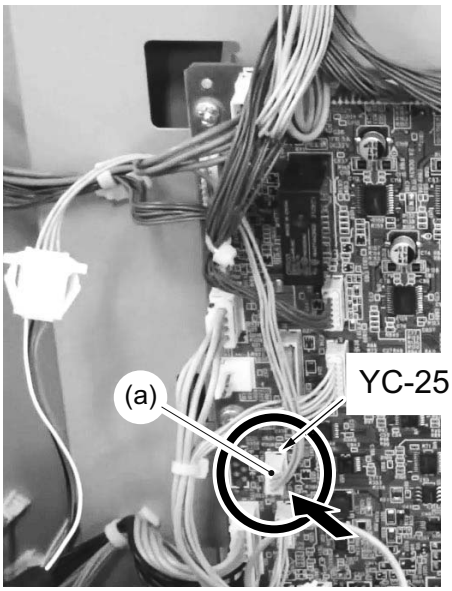

④–7 DF-7140

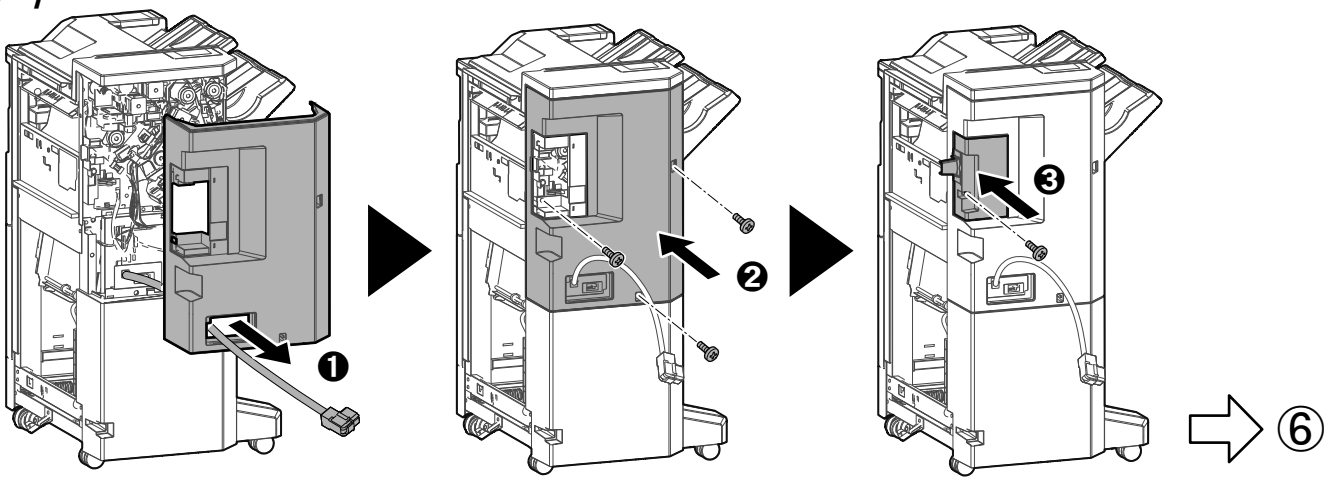

DF-7150

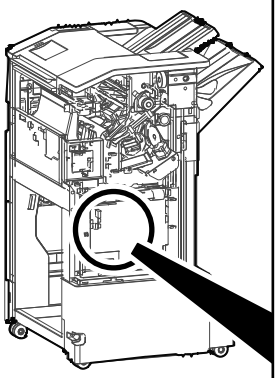

⑤-1

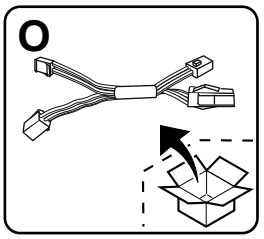

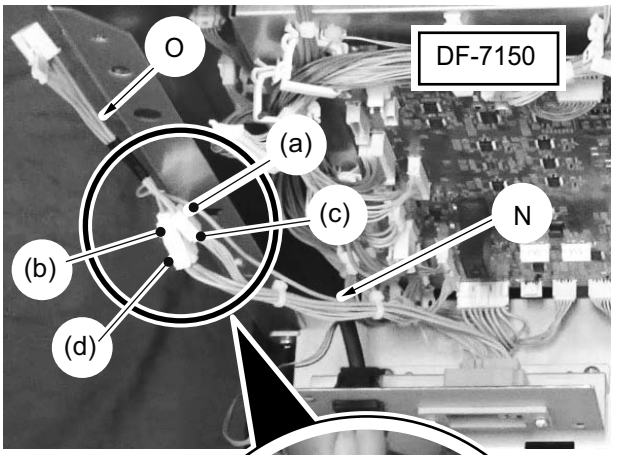

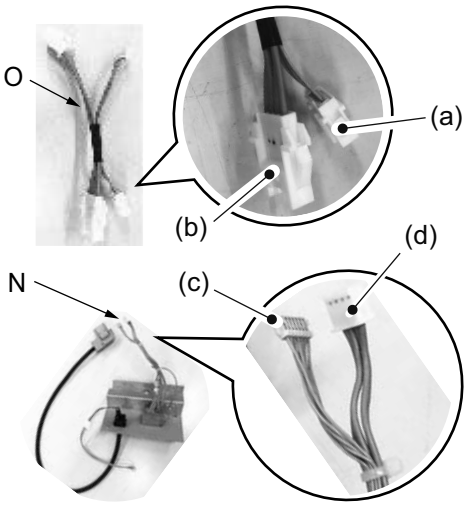

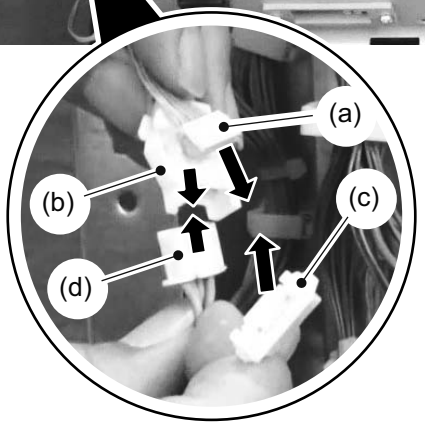

⑤-2

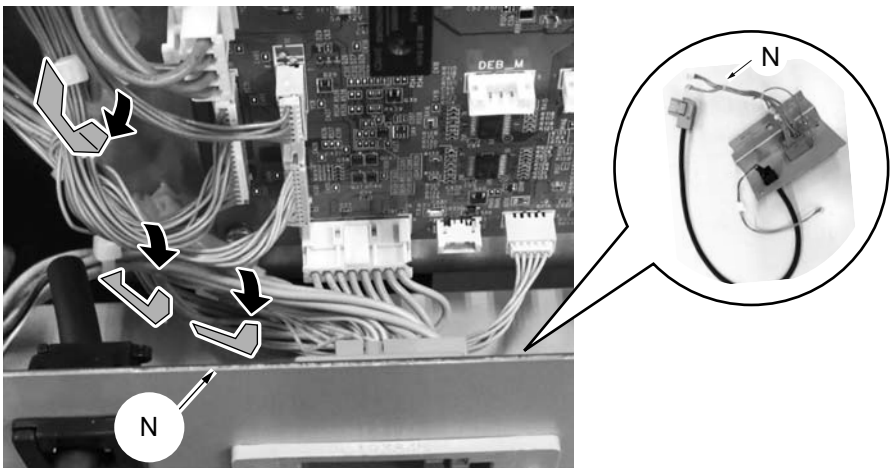

⑤-3

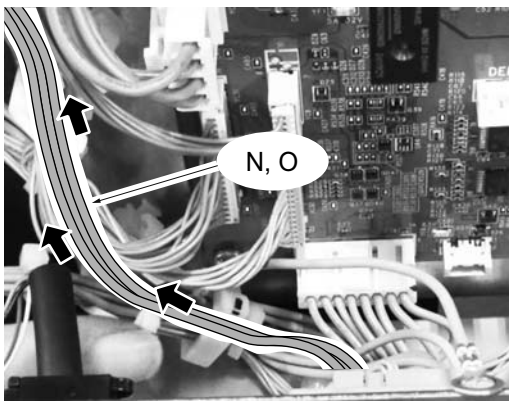

⑤-4

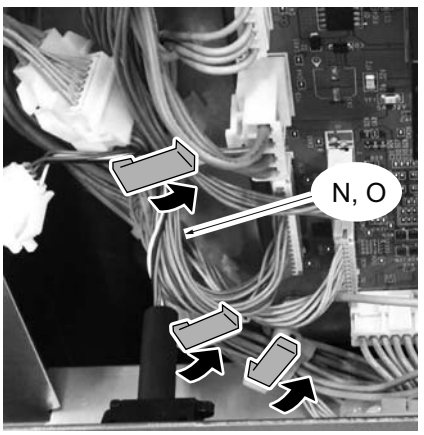

DF-7150

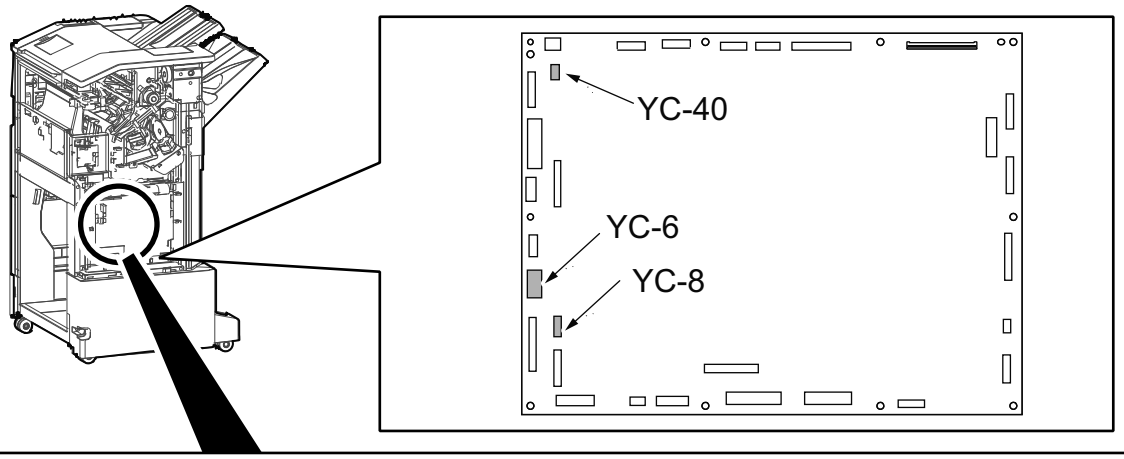

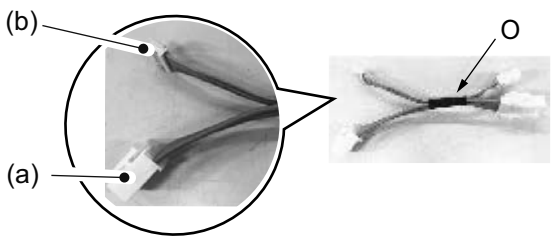

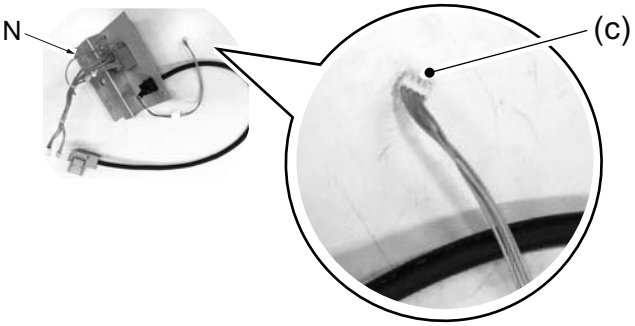

YC-6 / YC-8

⑤−5

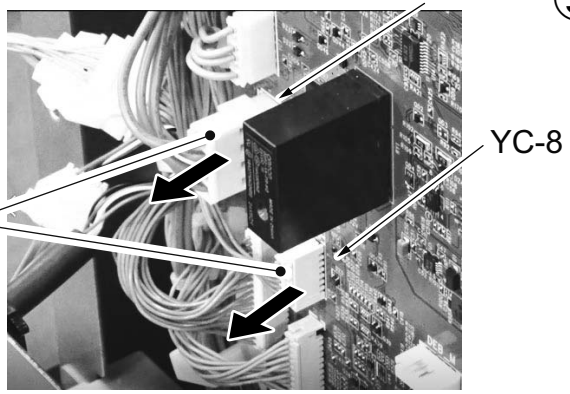

⑤−6

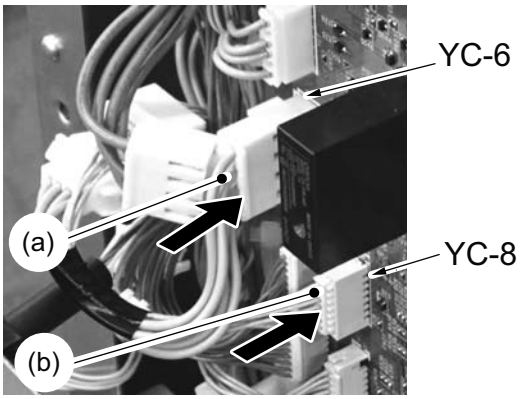

YC-40

⑤−7

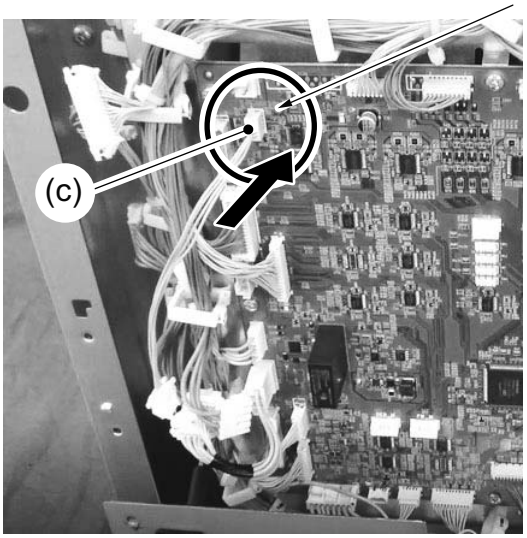

DF-7150

DP PWB : YC-6 / YC-8 / YC-40

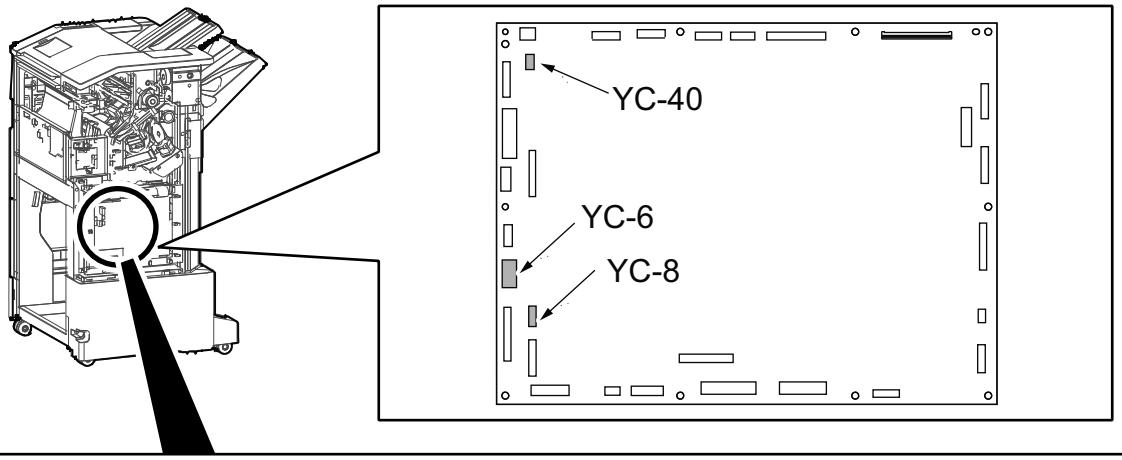

⑤-8

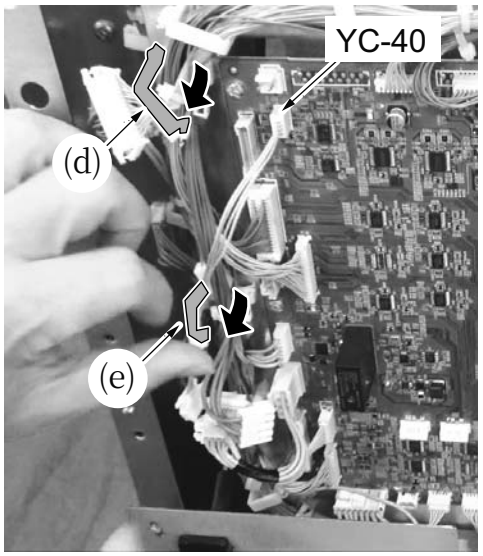

⑤-9

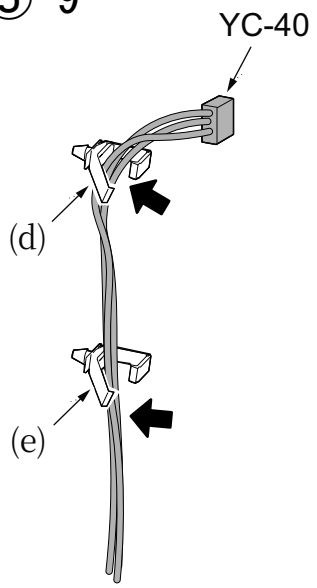

⑤-10

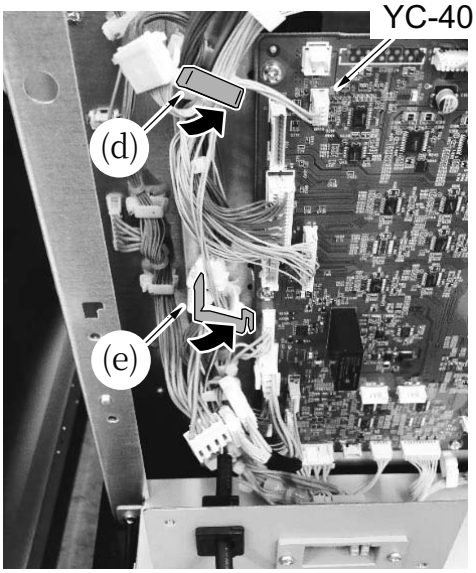

⑤-11

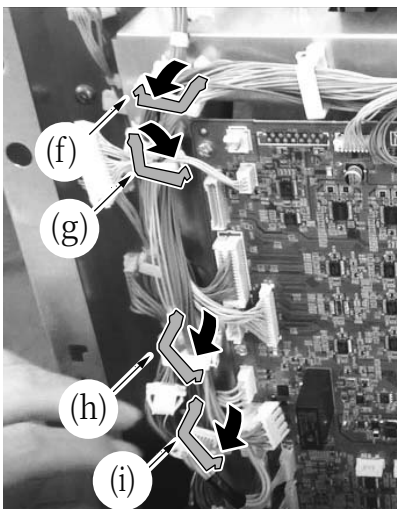

⑤-12

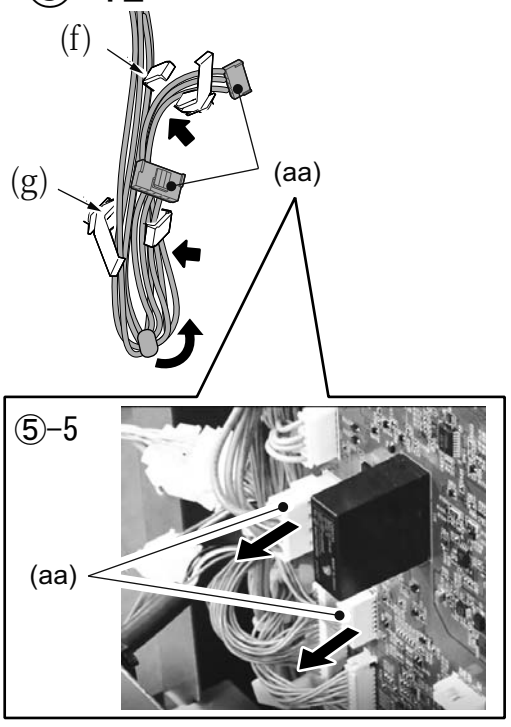

⑤-13

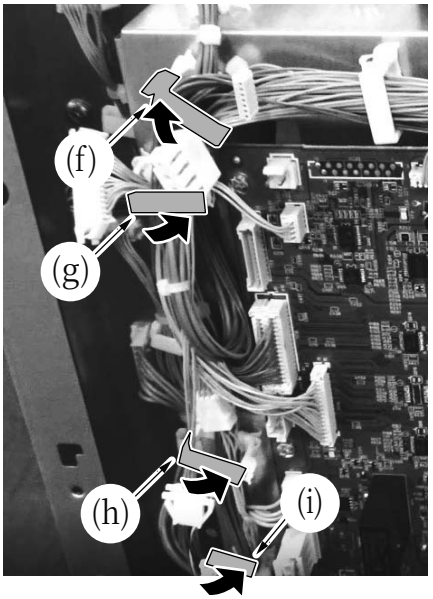

⑤-14

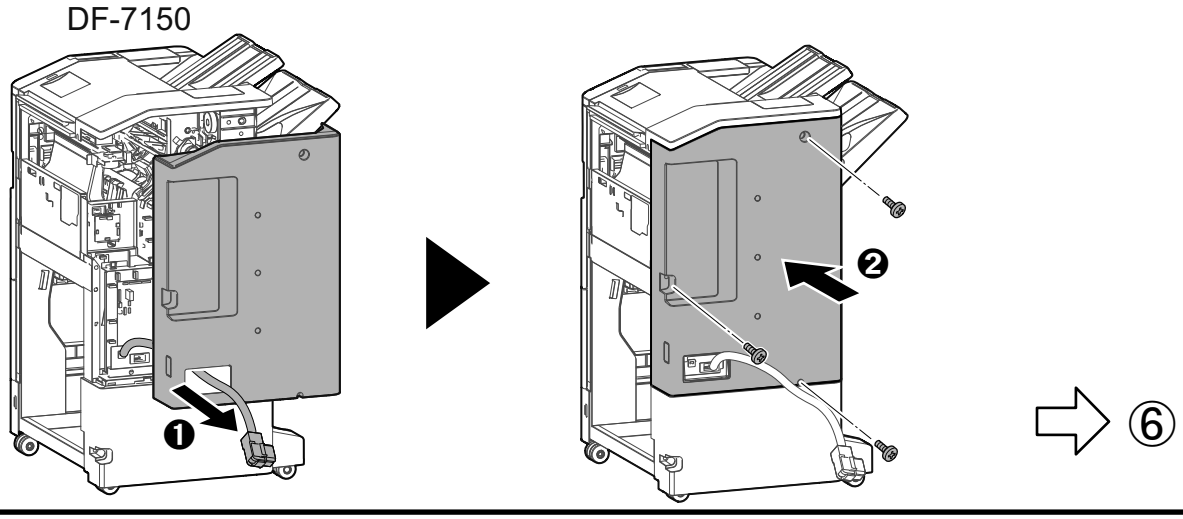
DF-7150
❶
❷
⑥

⑥

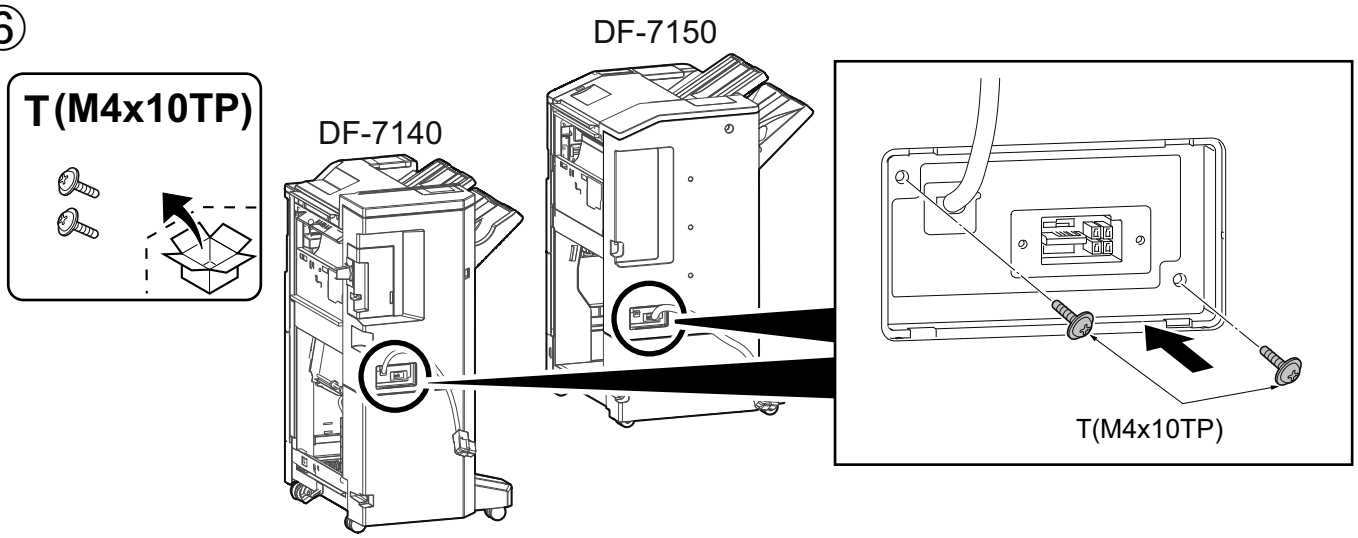
T(M4x10TP)
DF-7140
DF-7150
T(M4x10TP)

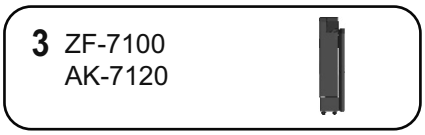
3 ZF-7100
AK-7120

①

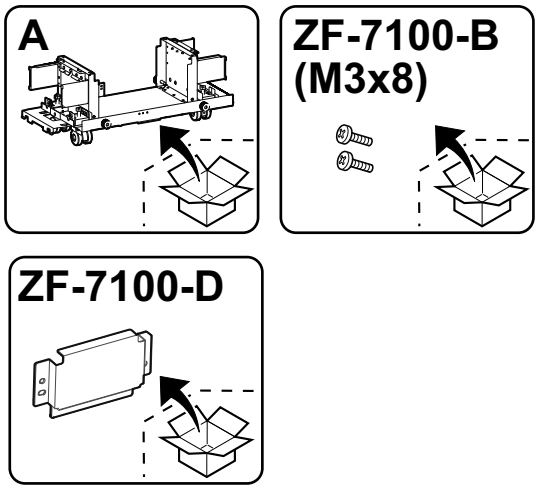
A
ZF-7100-B
(M3x8)
ZF-7100-D

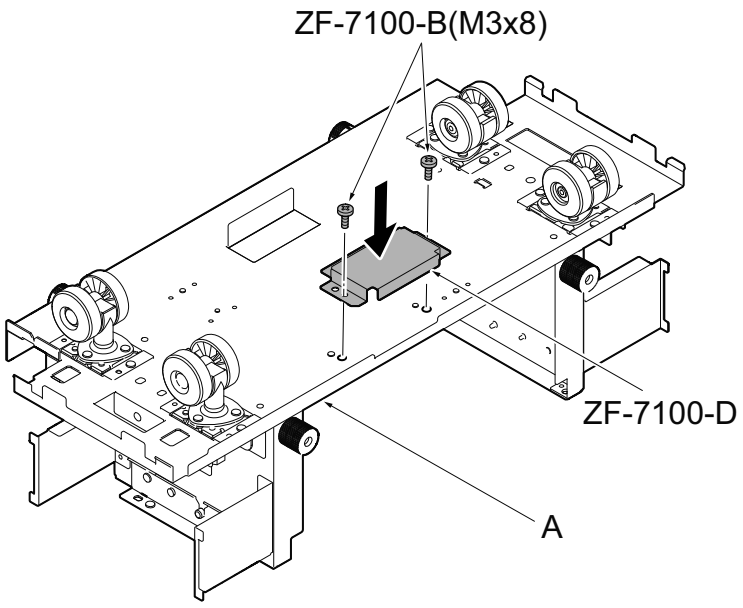
ZF-7100-B(M3x8)
ZF-7100-D
A

②

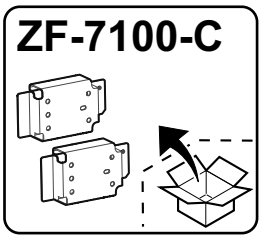

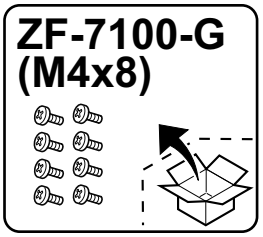

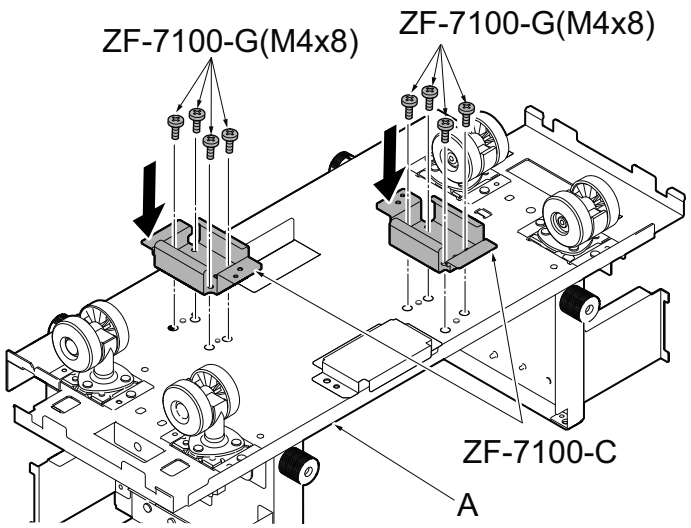

③

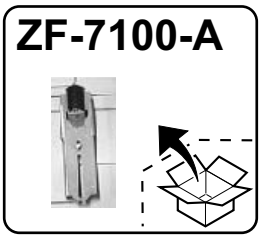

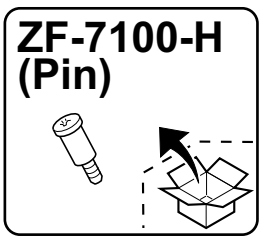

④

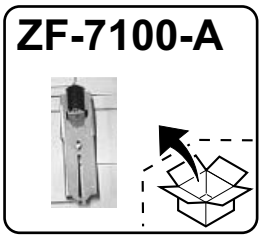

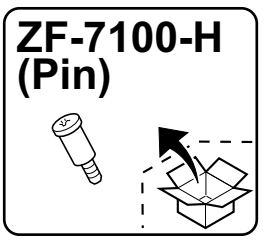

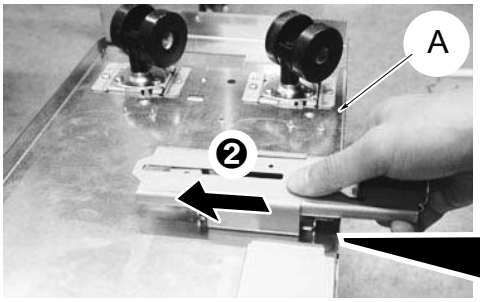

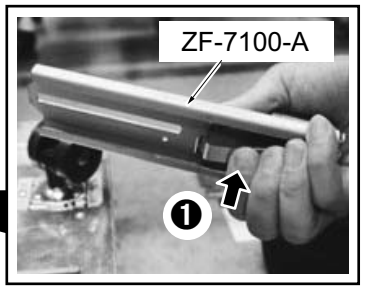

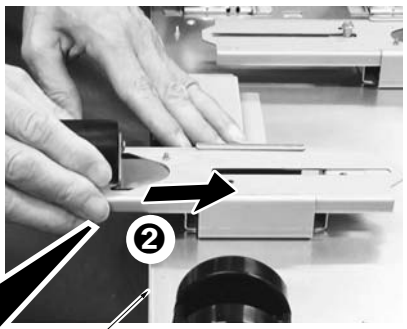

ZF-7100-H(Pin)

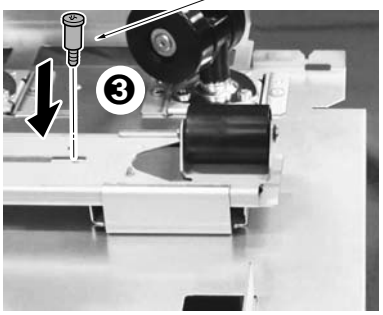

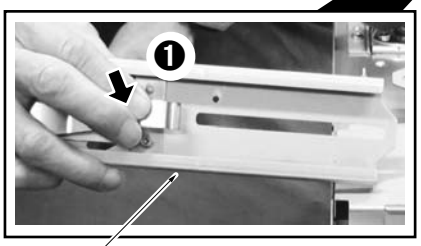

ZF-7100-A

A

ZF-7100-H
(Pin)

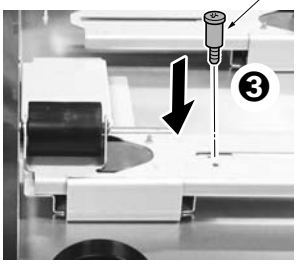

⑤

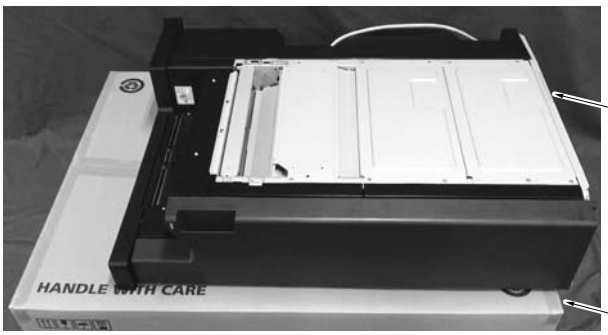

ZF-7100

Packaging carton(ZF-7100)

⑥

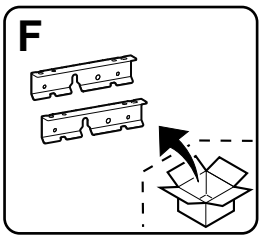
F

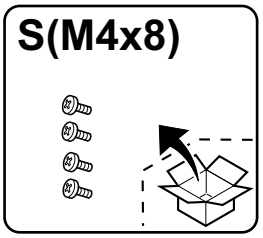
S(M4x8)

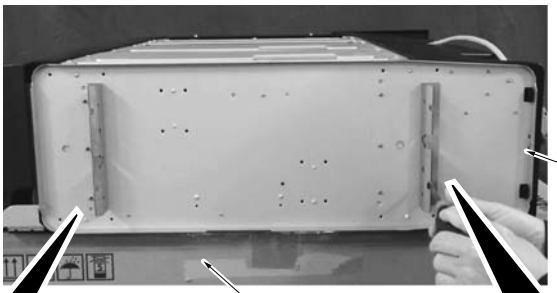
ZF-7100
Packaging carton
(ZF-7100)

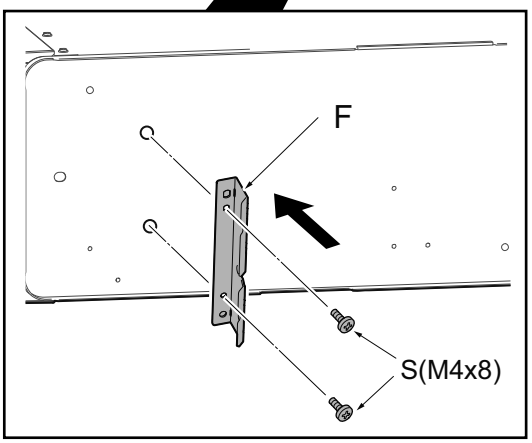
F
S(M4x8)

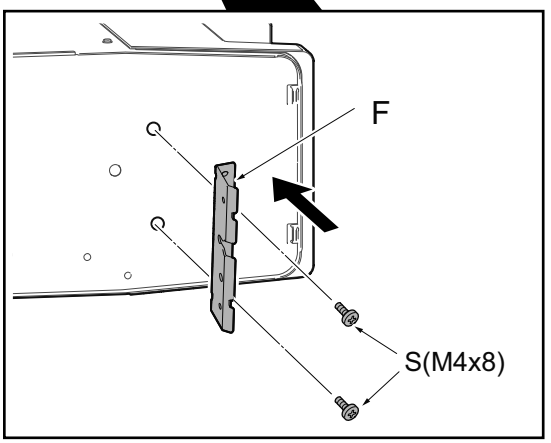
F
S(M4x8)

⑦

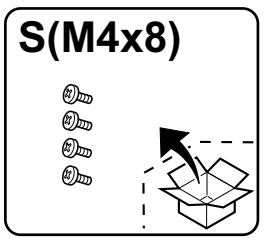
S(M4x8)

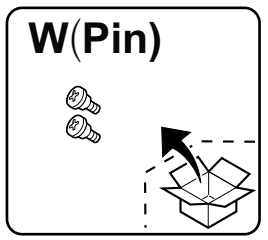
W(Pin)

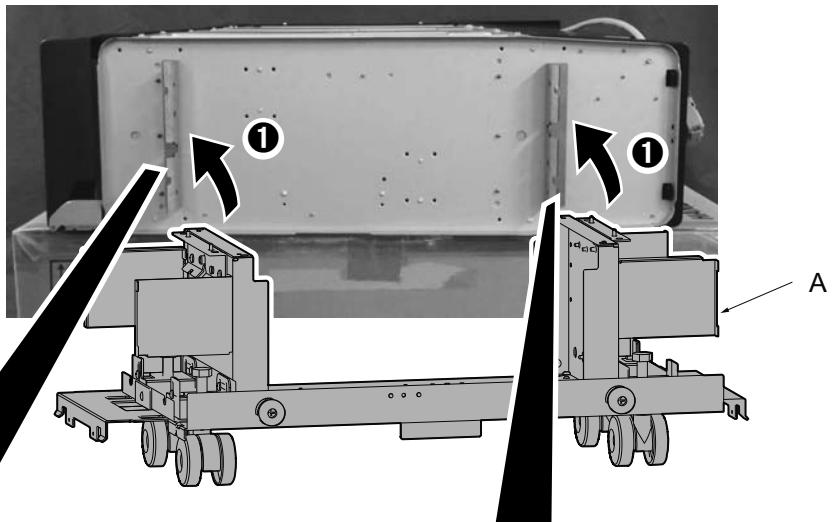
❶
❶
A

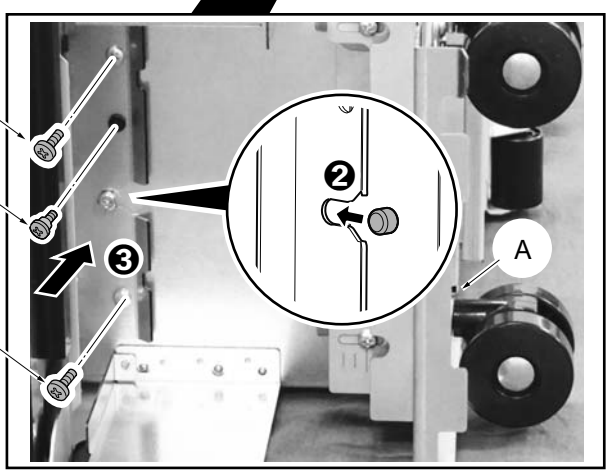
S(M4x8)
W(Pin)
S(M4x8)
❷
❸
A

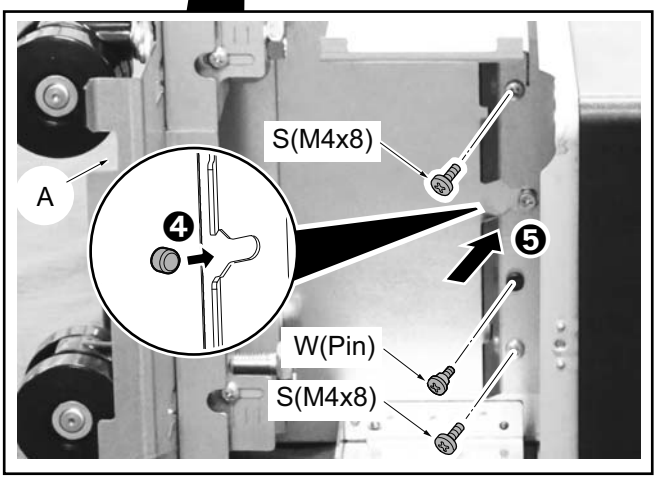
S(M4x8)
A
❹
❺
W(Pin)
S(M4x8)

⑧

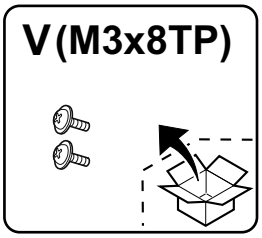
V(M3x8TP)

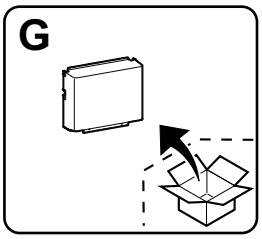
G

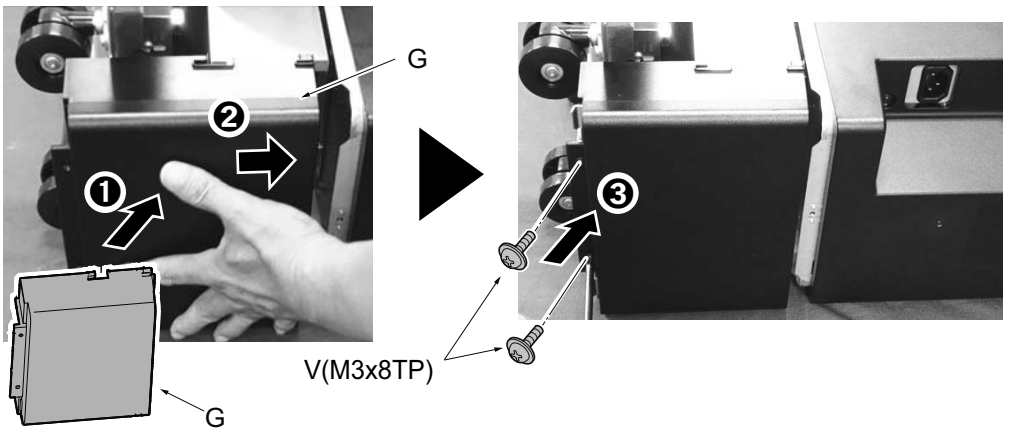
G
V(M3x8TP)
G

⑨

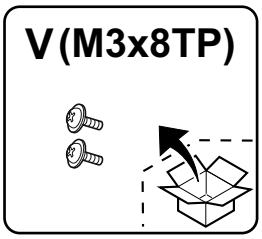
V(M3x8TP)

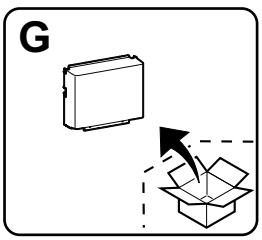
G

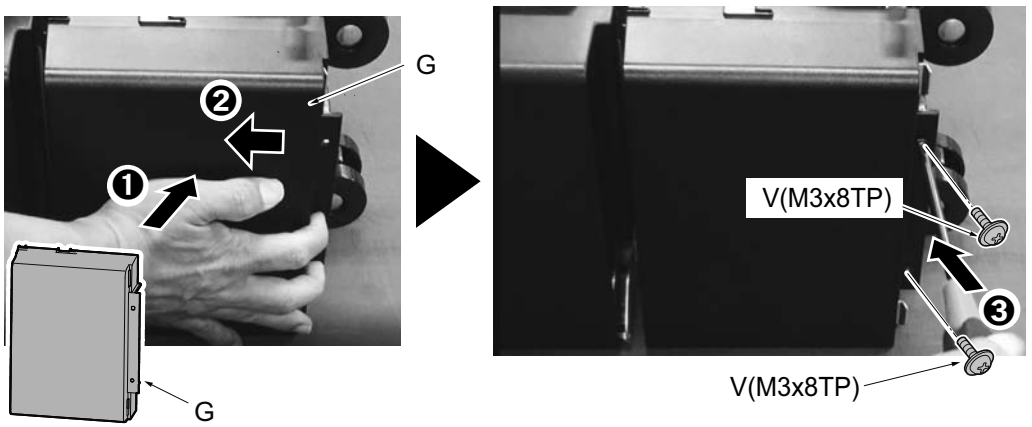
G
V(M3x8TP)
V(M3x8TP)
G

⑩

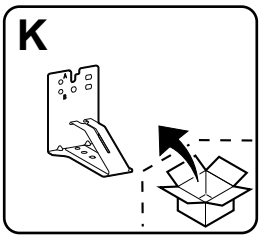
K

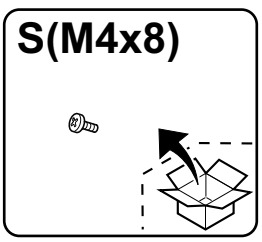
S(M4x8)

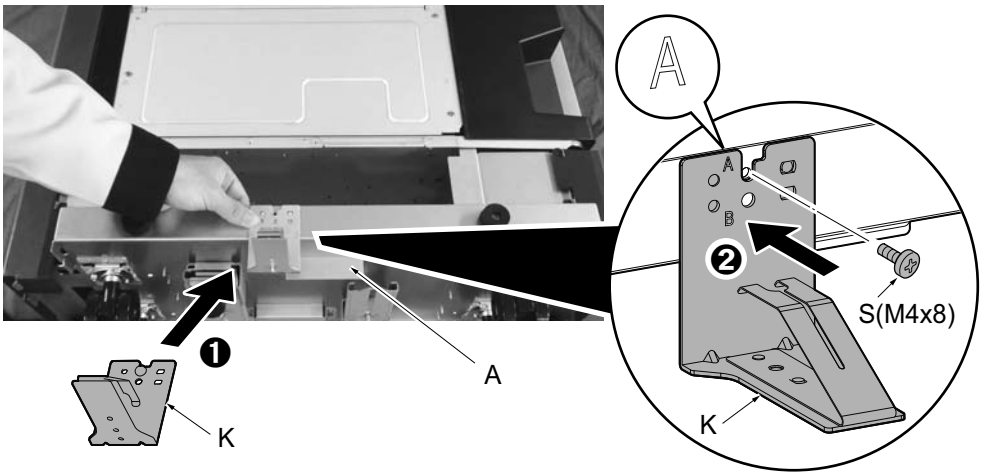
A
A
B
S(M4x8)
K
A
K

⑪

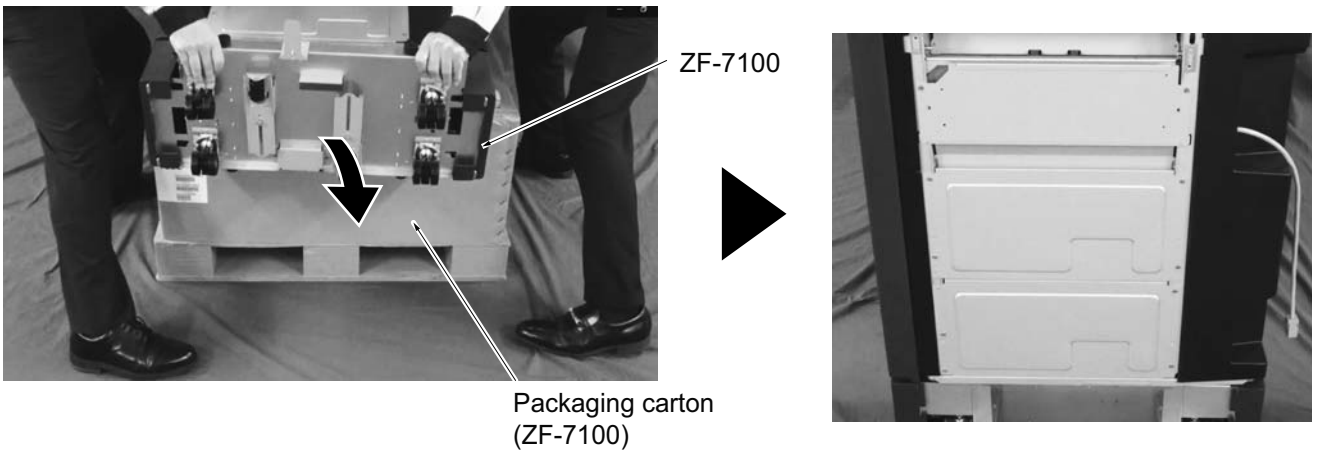
ZF-7100
Packaging carton
(ZF-7100)

⑫

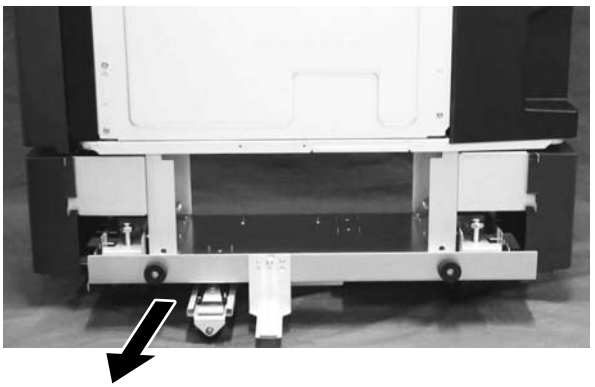

180°

⑬

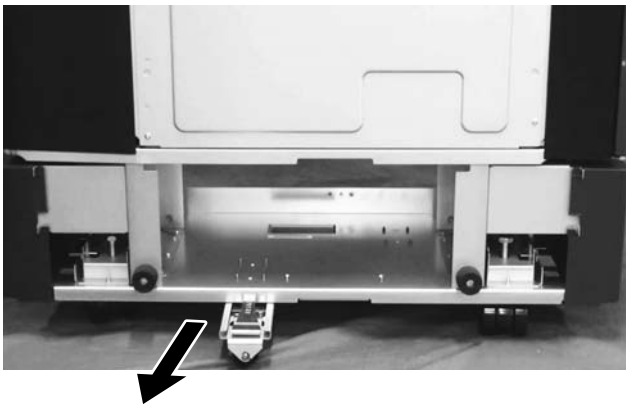

⑭

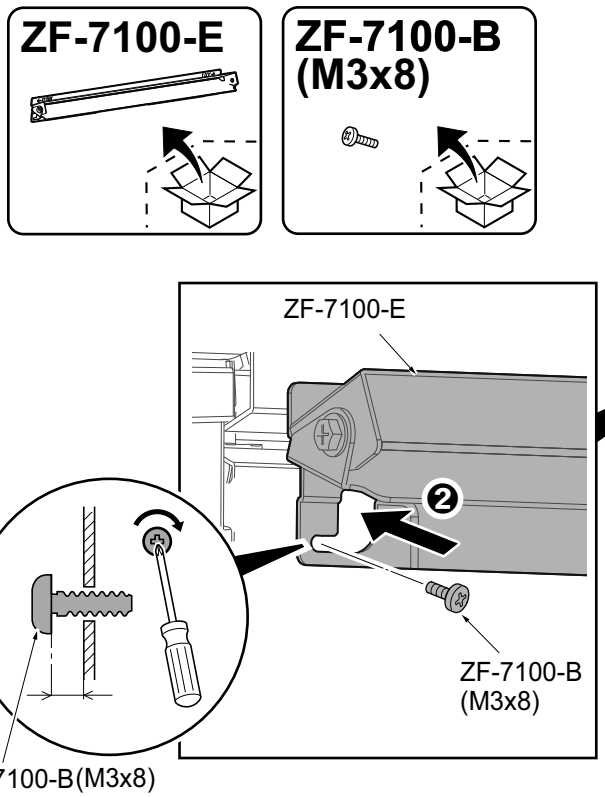
ZF-7100-E
ZF-7100-B
(M3x8)
ZF-7100-E
❷
ZF-7100-B
(M3x8)
ZF-7100-B(M3x8)

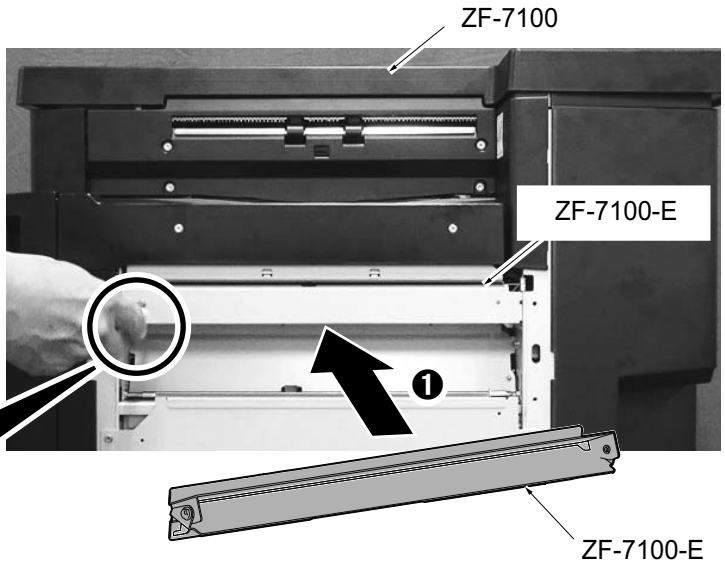
ZF-7100
ZF-7100-E
❶
ZF-7100-E

⑮

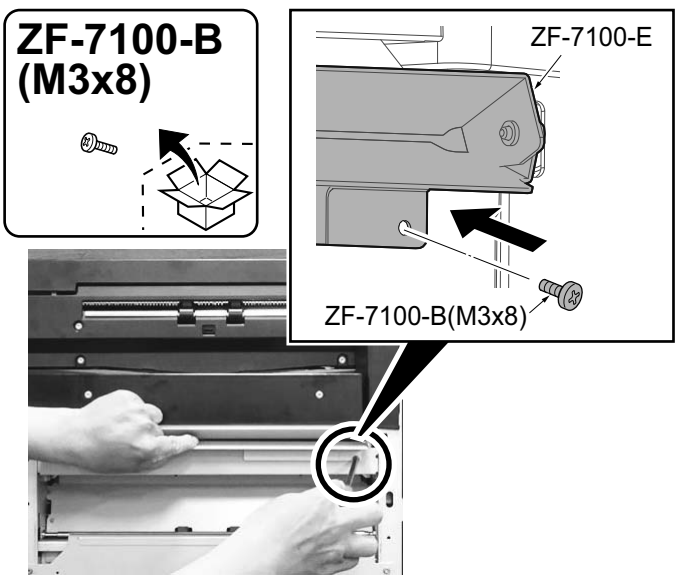
ZF-7100-B
(M3x8)
ZF-7100-E
ZF-7100-B(M3x8)

⑯

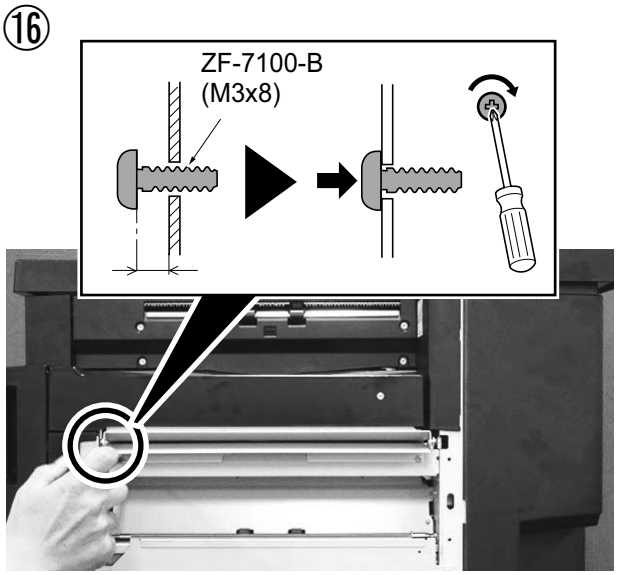
ZF-7100-B
(M3x8)

⑰

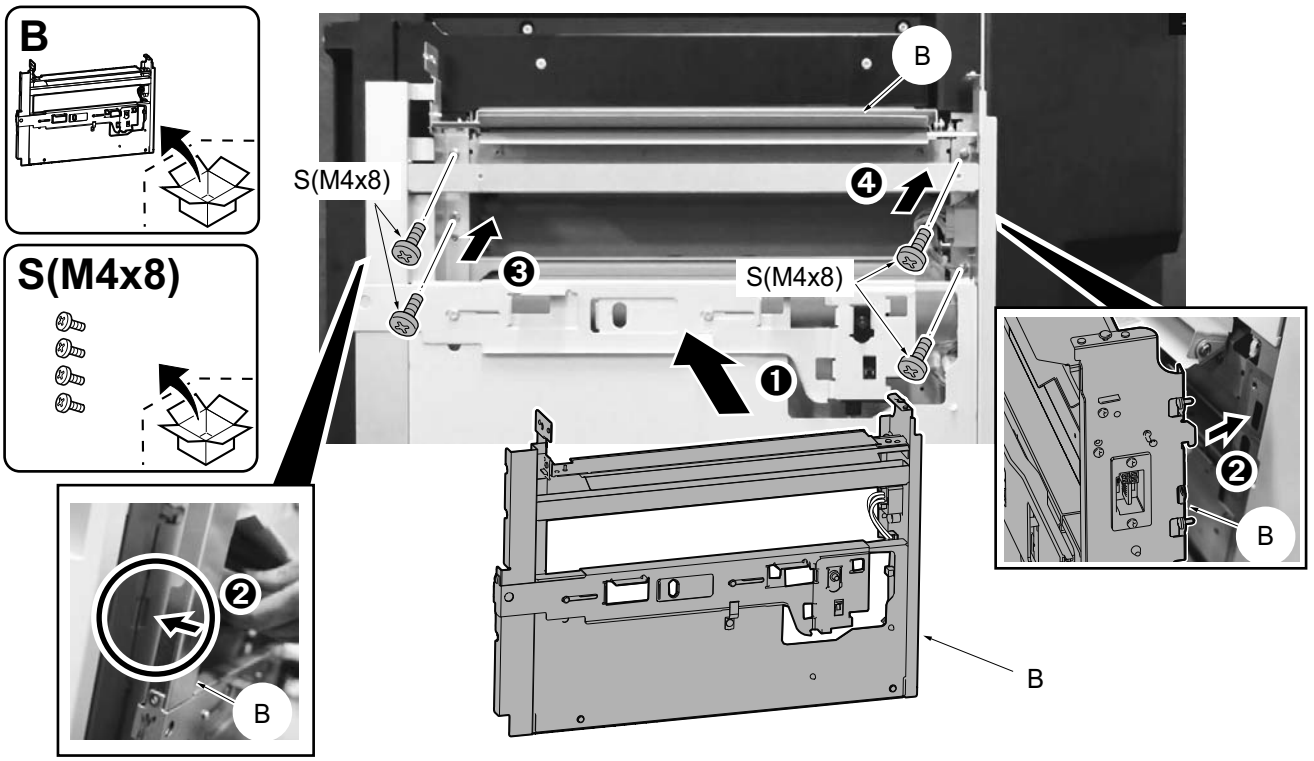
B
S(M4x8)
S(M4x8)
S(M4x8)
B
B
B
B

⑱

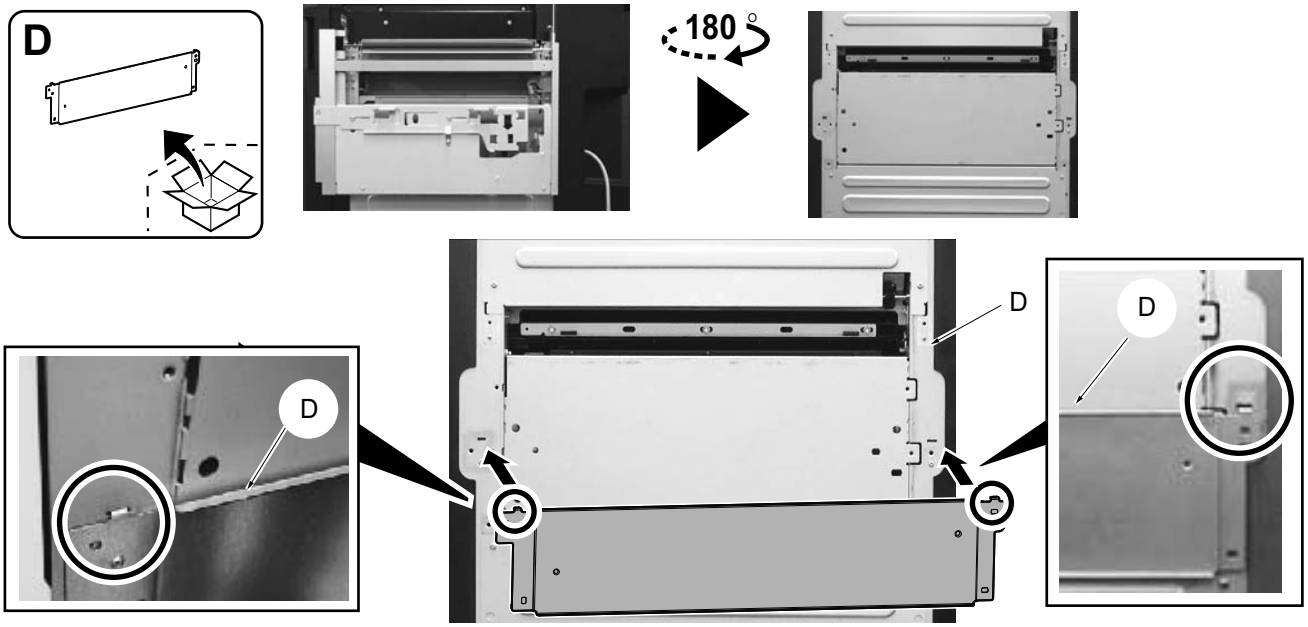
D
180°
D
D
D

⑲

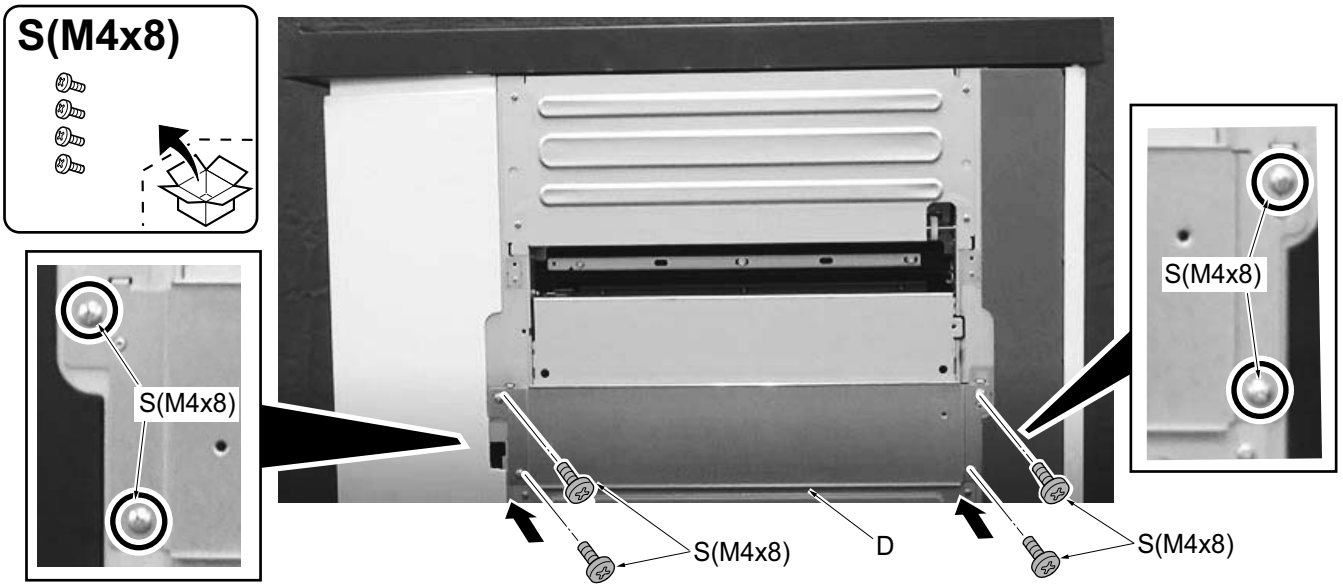
S(M4x8)
S(M4x8)
S(M4x8)
S(M4x8)
D
S(M4x8)

⑳

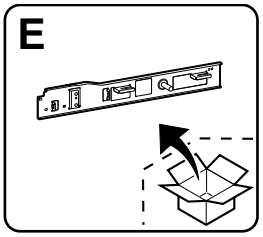

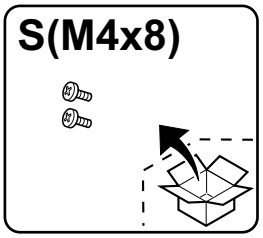

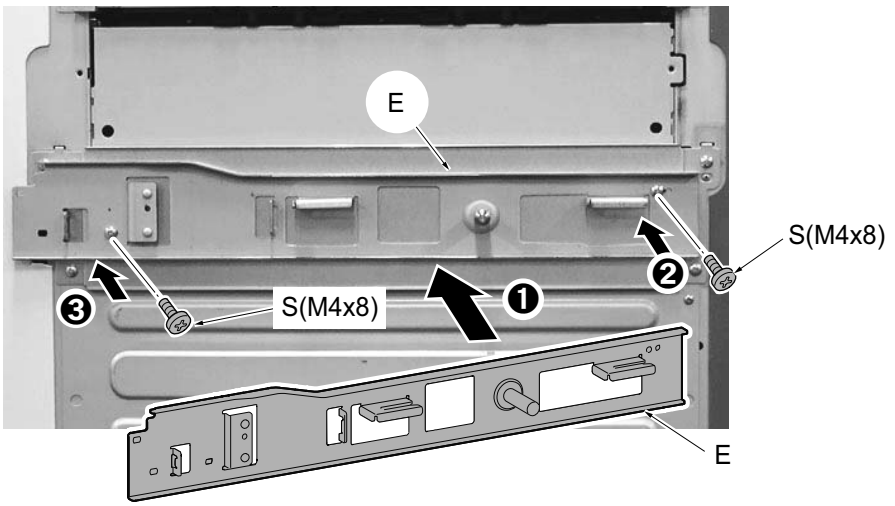

㉑

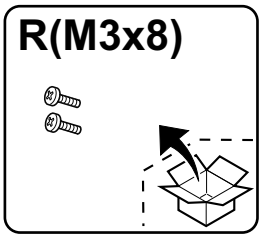

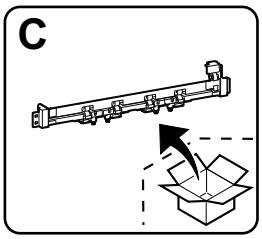

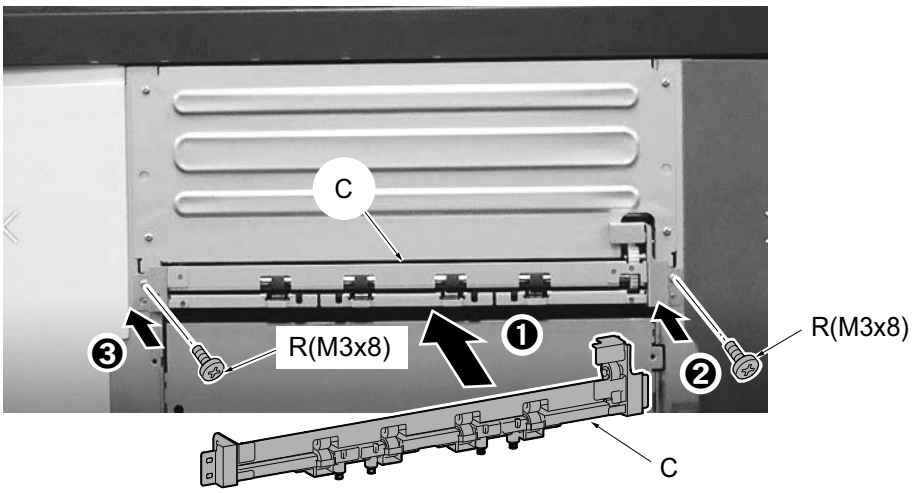

㉒

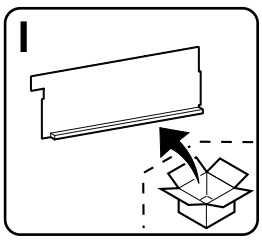



㉓

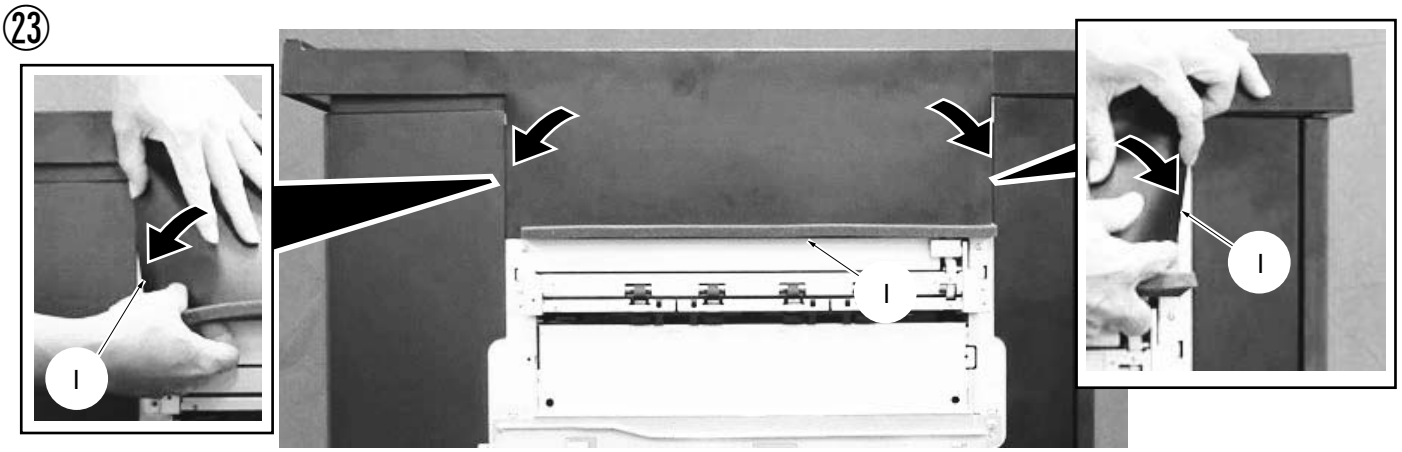

㉔

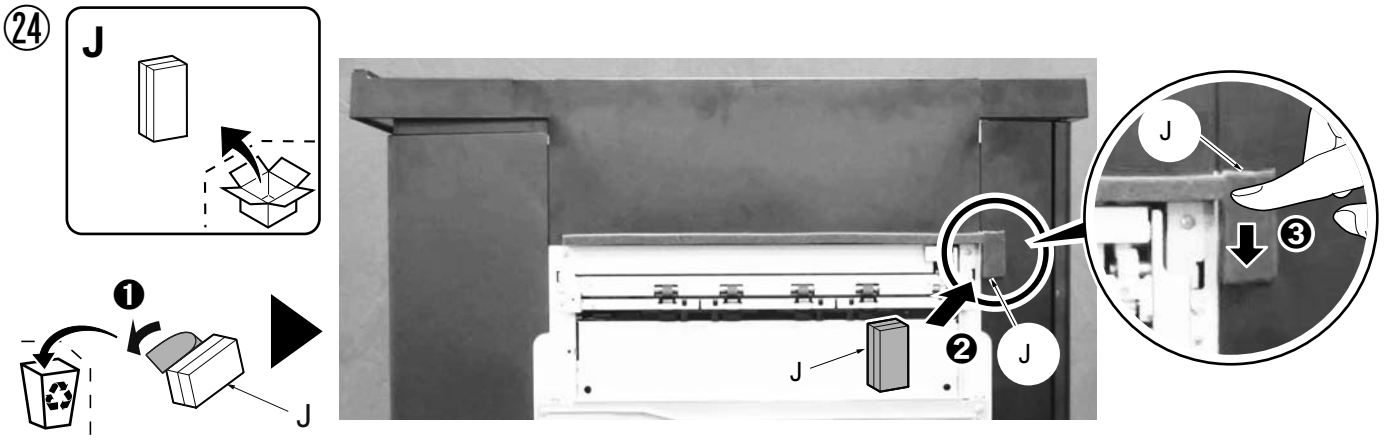

㉕

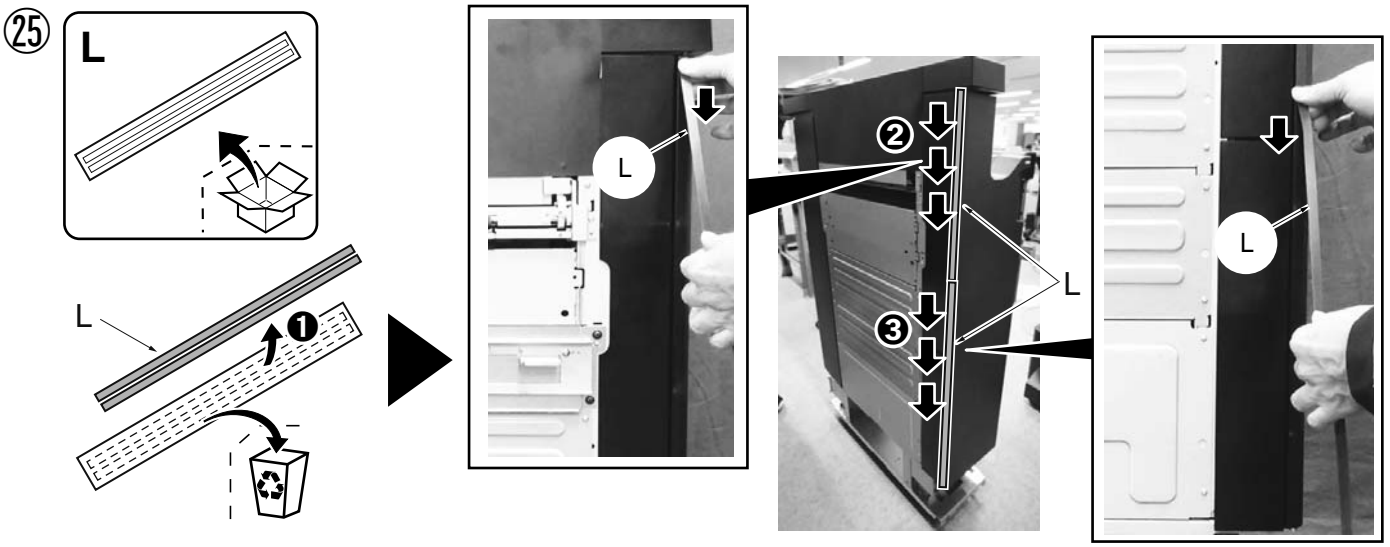

㉖

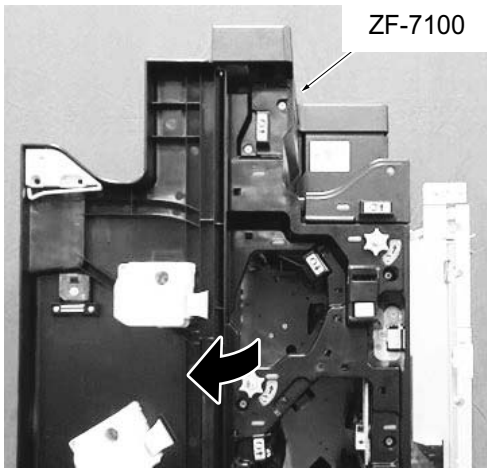

㉗

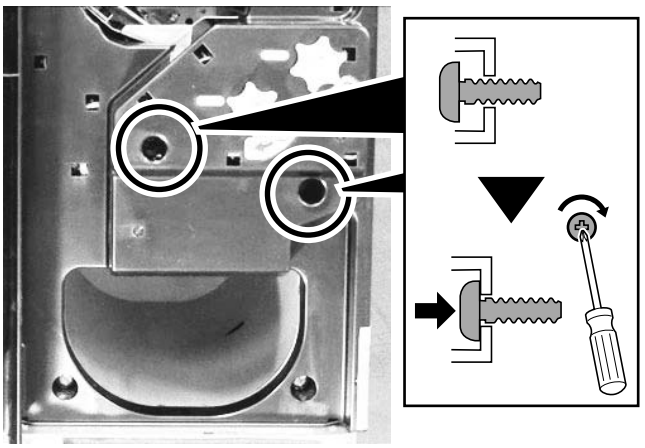

㉘

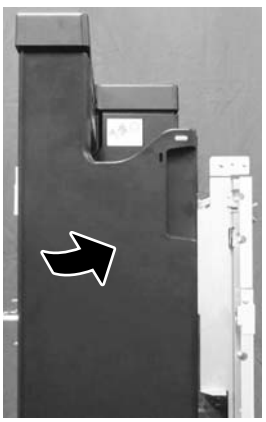

4 ZF-7100
AK-7120
DF-7140/DF-7150



①



②

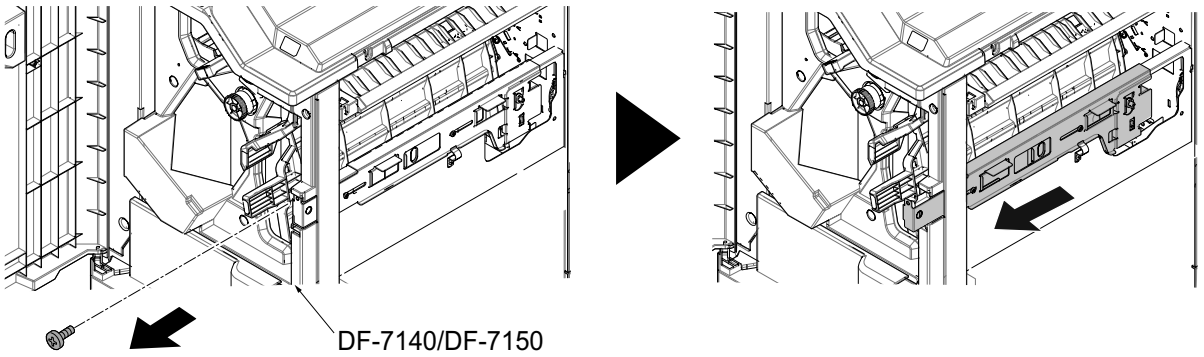

③

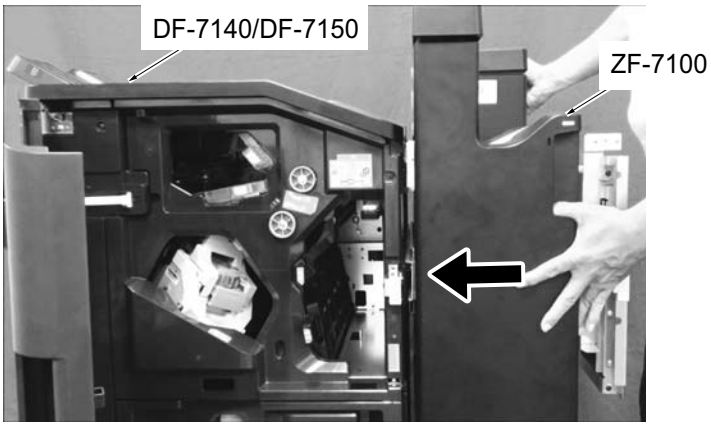

④

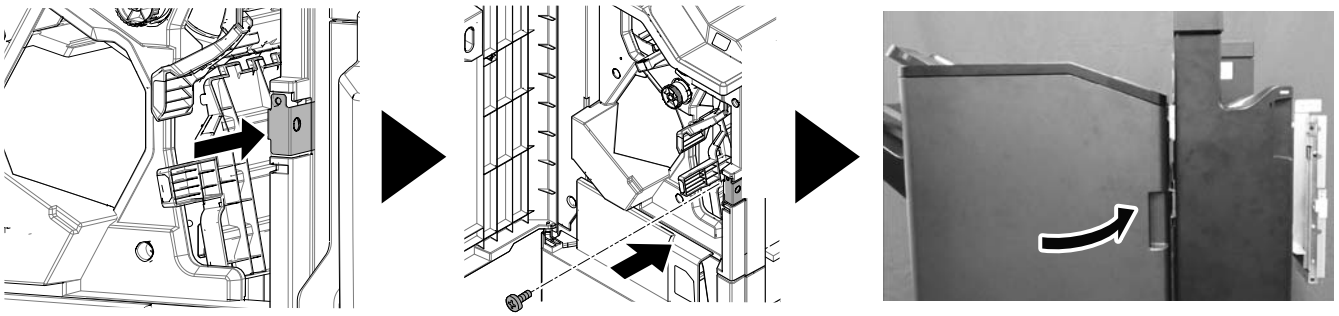

5 ZF-7100
AK-7120
DF-7140/DF-7150
Main Unit



①

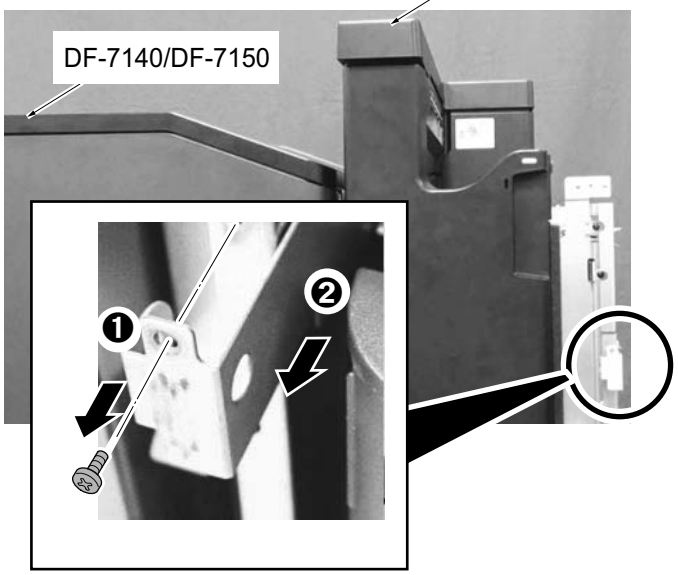

②

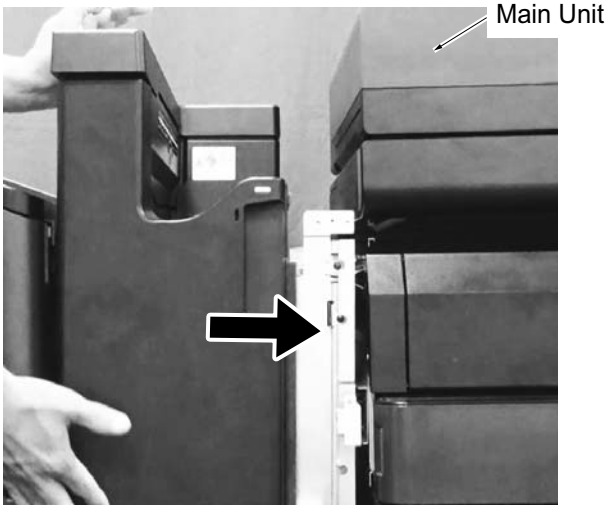

③

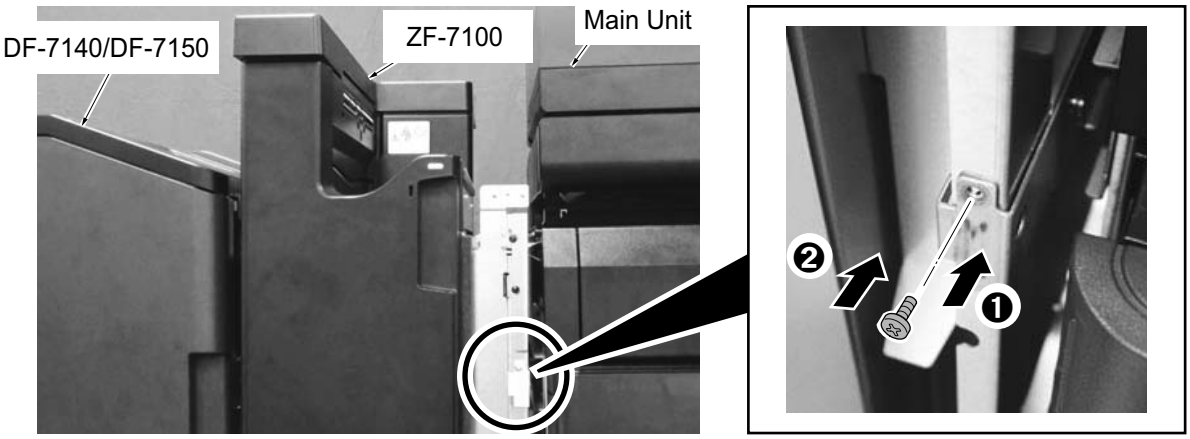

④



⑤

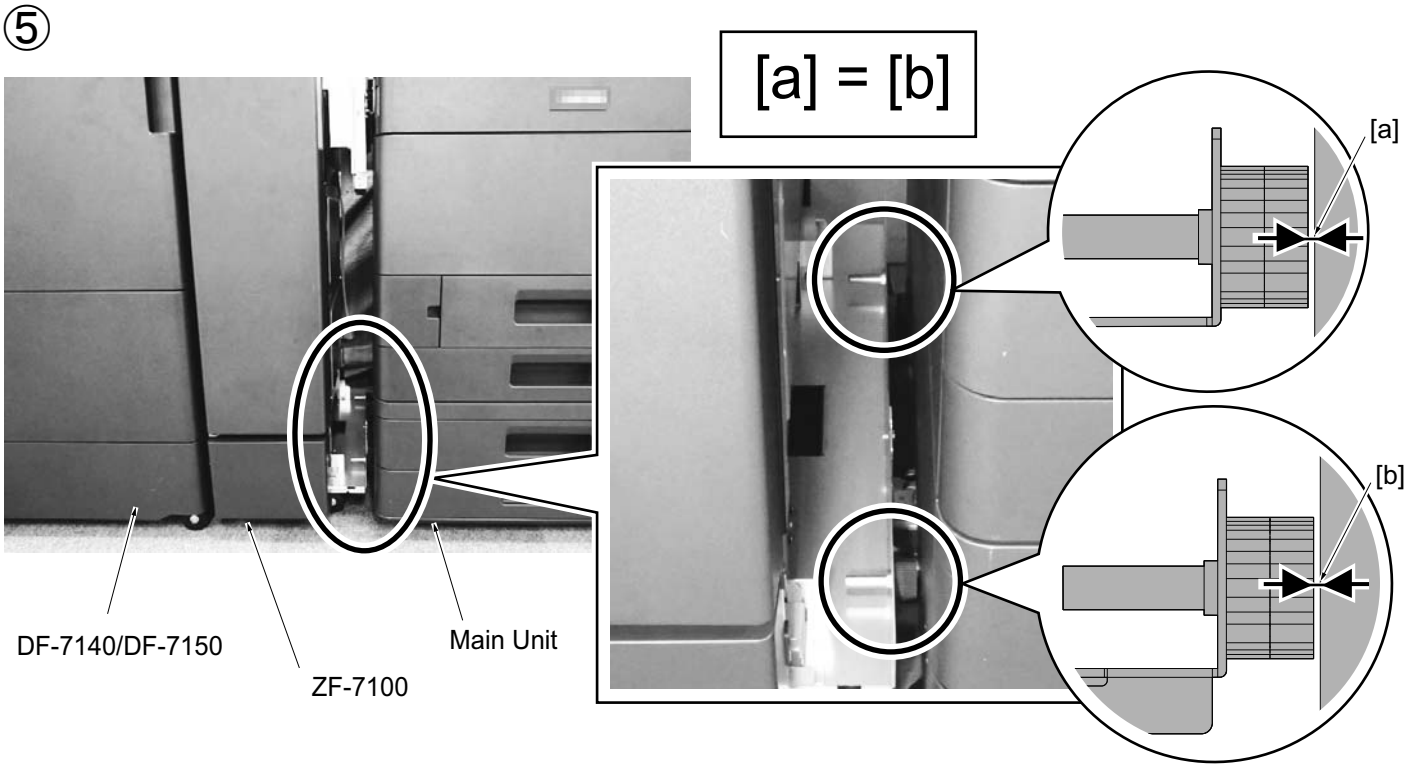
[a] = [b]
[a]
[b]
DF-7140/DF-7150
ZF-7100
Main Unit

⑥

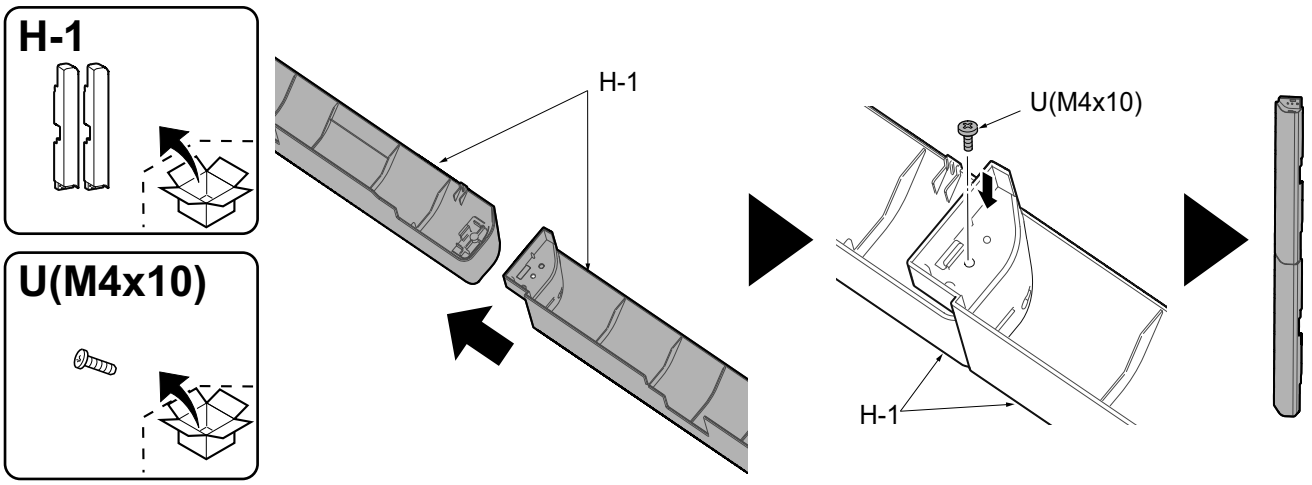
H-1
U(M4x10)
H-1
U(M4x10)
H-1

⑦

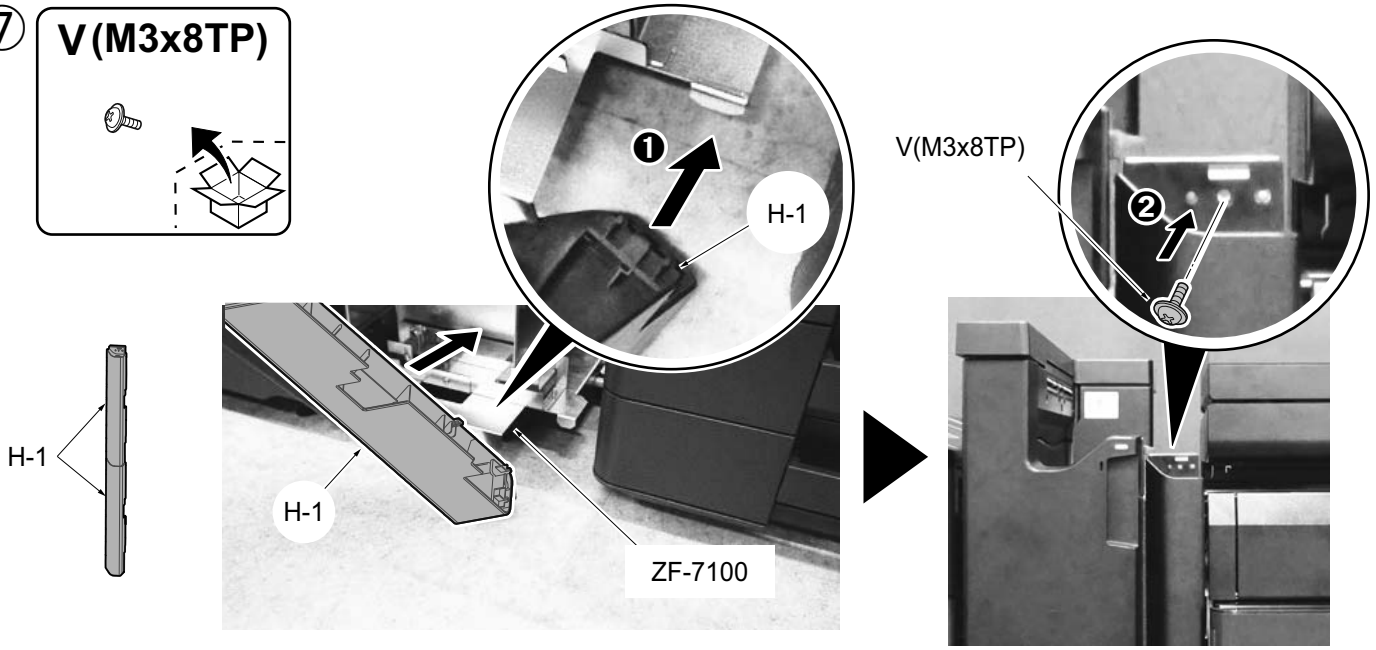
V(M3x8TP)
❶
H-1
V(M3x8TP)
❷
H-1
H-1
ZF-7100

⑧

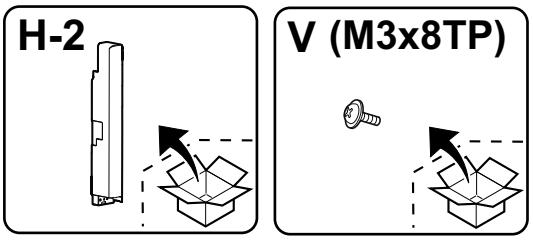
H-2
V (M3x8TP)

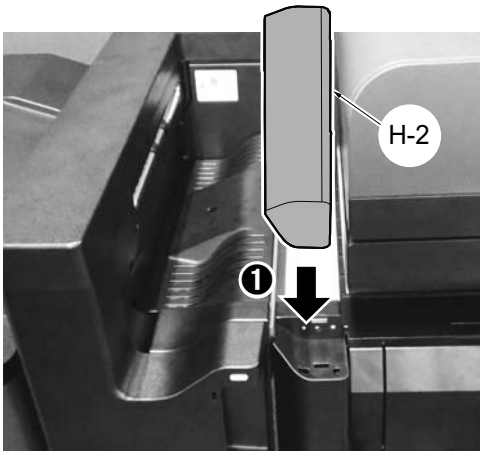
H-2
①

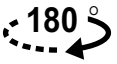
180°

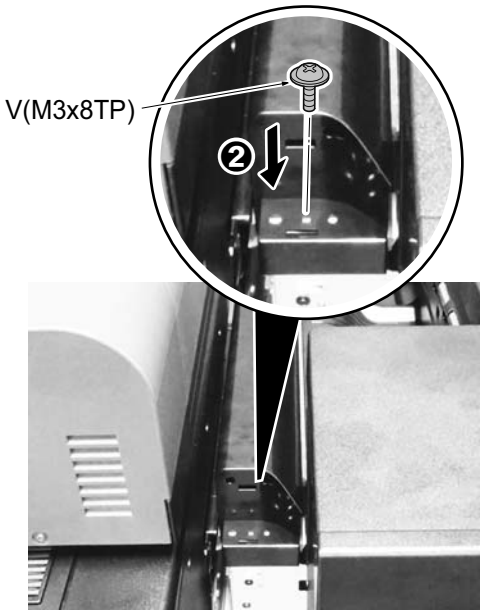
V(M3x8TP)
②

⑨

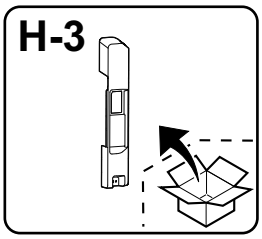
H-3

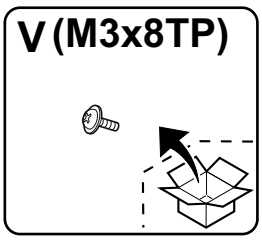
V (M3x8TP)

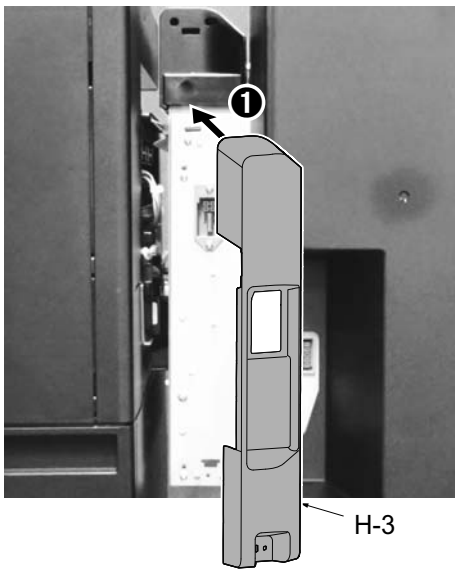
①
H-3

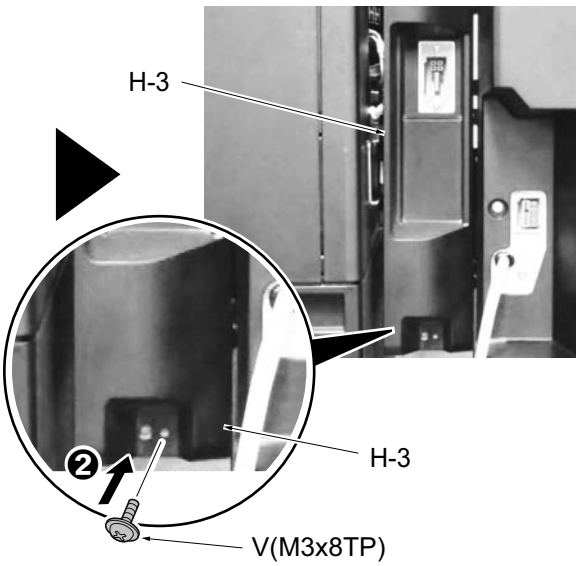
H-3
H-3
②
V(M3x8TP)

⑩

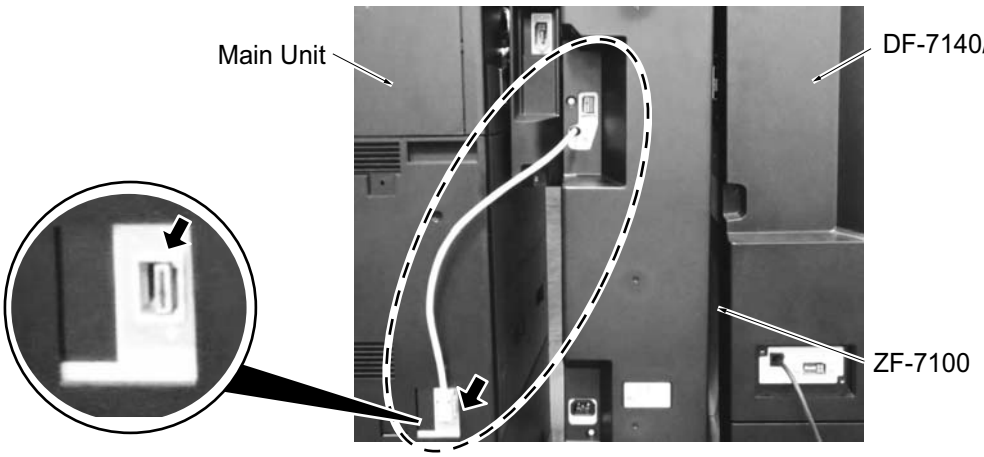
Main Unit
DF-7140/DF-7150
ZF-7100

⑪

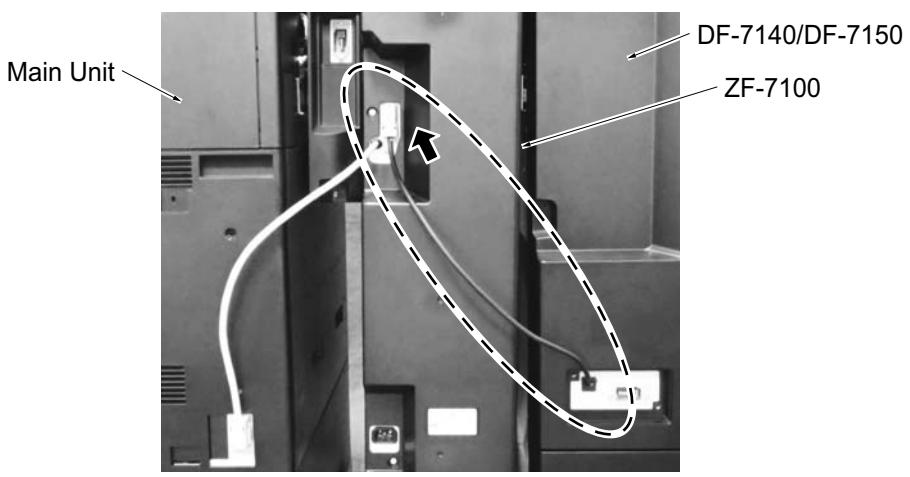
Main Unit
DF-7140/DF-7150
ZF-7100

⑫

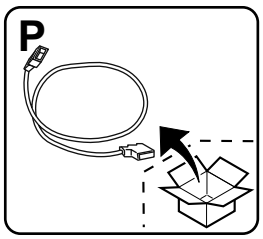
P

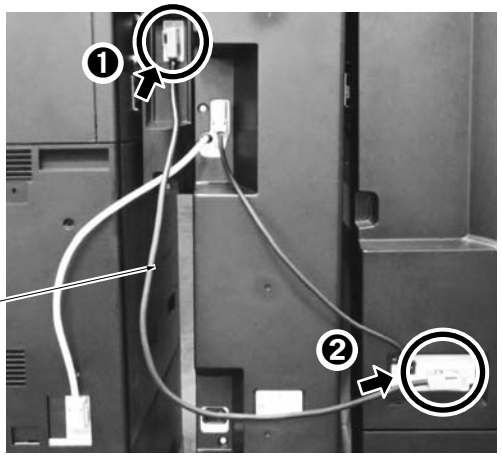
❶
P
❷

⑬

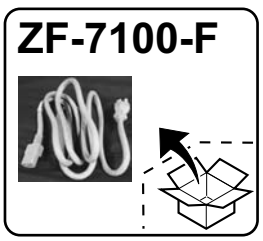
ZF-7100-F

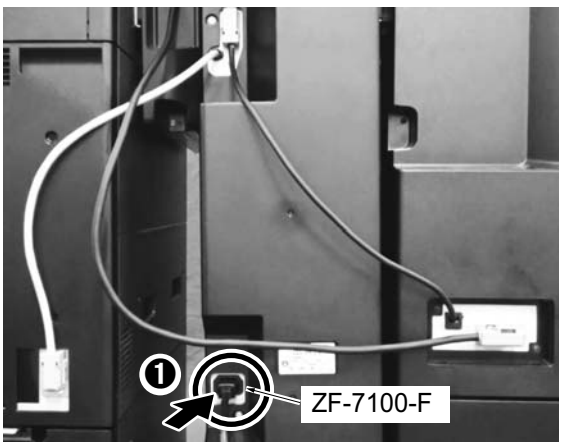
❶
ZF-7100-F

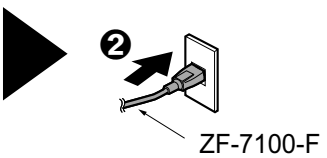
❷
ZF-7100-F

⑭

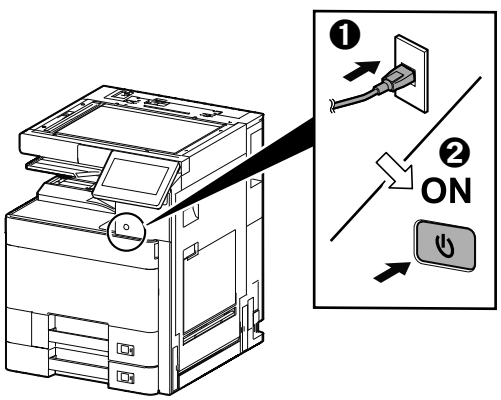
❶
❷
ON



2021. 4
303V75671003

INSTALLATION GUIDE

GUIDE D'INSTALLATION

GUÍA DE INSTALACION

INSTALLATIONSANLEITUNG

GUIDA ALL'INSTALLAZIONE

安装手册

설치안내서

設置手順書

BF-730

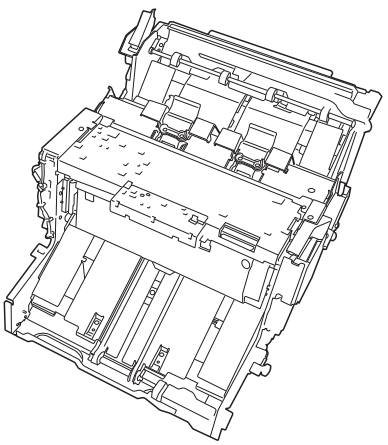

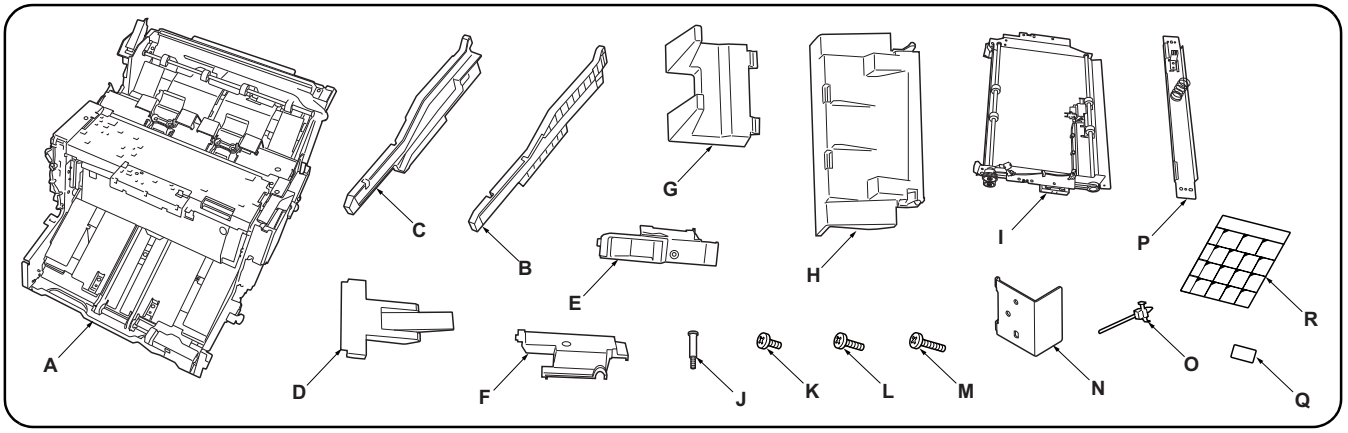

English

Supplied parts

A. Center-Folding unit 1
B. Front rail 1
C. Rear rail 1
D. Output stopper 1
E. Front side cover 1
F. Rear side cover 1
G. Output stock tray 1
H. Output tray 1
I. Relay paper conveying unit 1
J. Pin 1
K. M4 × 8 screw 11
L. M4 × 10 screw (black) 2
M. M4 × 12 screw 4
N. Lock plate 2
O. Binding band 1
P. Guide 1
Q. D7 label 1
R. Operation label 1

Français

Pièces fournies

A. Plieuse 1
B. Glissière avant 1
C. Glissière arrière 1
D. Butée de sortie 1
E. Capot latéral avant 1
F. Capot latéral arrière 1
G. Plateau de sortie du papier 1
H. Plateau de sortie 1
I. Unité de transport du papier de relais 1
J. Goupille 1
K. Vis M4 × 8 11
L. Vis M4 × 10 (noire) 2
M. Vis M4 × 12 4
N. Plaque de verrouillage 2
O. Collier de fixation 1
P. Guide 1
Q. Étiquette D7 1
R. Étiquette de fonctionnement 1

Español

Partes suministradas

A. Unidad de plegado 1
B. Carril frontal 1
C. Carril posterior 1
D. Tope de salida 1
E. Cubierta lateral frontal 1
F. Cubierta lateral posterior 1
G. Bandeja de recolección de papel de salida 1
H. Bandeja de salida 1
I. Unidad de transporte de papel por relevador 1
J. Pasador 1
K. Tornillo M4 × 8 11
L. Tornillo M4 × 10 (negro) 2
M. Tornillo M4 × 12 4
N. Placa de cierre 2
O. Correa de sujeción 1
P. Guía 1
Q. Etiqueta D7 1
R. Etiqueta de funcionamiento 1

Deutsch

Gelieferte Teile

A. Mittenfalteinheit 1
B. Vordere Schiene 1
C. Hintere Schiene 1
D. Ausgabeanschlag 1
E. Vordere Seitenabdeckung 1
F. Hintere Seitenabdeckung 1
G. Ausgabestapelfach 1
H. Ausgabefach 1
I. Eingesetzte Papierfördereinheit 1
J. Stift 1
K. M4 × 8 Schraube 11
L. M4 × 10 Schraube (schwarz) 2
M. M4 × 12 Schraube 4
N. Sperrplatte 2
O. Schellenband 1
P. Führung 1
Q. D7 Aufkleber 1
R. Bedienungsaufkleber 1

Italiano

Parti di fornitura

A. Unità di piegatura centrale 1
B. Rotaia anteriore 1
C. Rotaia posteriore 1
D. Fermo di uscita 1
E. Coperchio laterale anteriore 1
F. Coperchio laterale posteriore 1
G. Vassoio di uscita stoccaggio 1
H. Vassoio di uscita 1
I. Unità relay di trasporto carta 1
J. Perno 1
K. Vite M4 × 8 11
L. Vite M4 × 10 (nera) 2
M. Vite M4 × 12 4
N. Piastra di bloccaggio 2
O. Fascetta di legatura 1
P. Guida 1
Q. Etichetta D7 1
R. Etichetta di operazione 1

简体中文

附属品

A. 中缝装订一折页单元 1
B. 前部导轨 1
C. 后部导轨 1
D. 排纸挡板 1
E. 前部侧盖板 1
F. 后部侧盖板 1
G. 堆纸托盘 1
H. 排纸托盘 1
I. 中间搬运单元 1
J. 销钉 1
K. M4×8 螺丝 11
L. M4×10 螺丝（黑） 2
M. M4×12 螺丝 4
N. 锁定板 2
O. 束线带 1
P. 导板 1
Q. D7 标签 1
R. 操作标签 1

한국어

동봉품

A. 접기 유니트 1
B. 레일 앞 1
C. 레일 뒤 1
D. 배지 스토퍼 1
E. 사이드 커버 앞 1
F. 사이드 커버 뒤 1
G. 배지 저장트레이 1
H. 배지 트레이 1
I. 중계 반송유니트 1
J. 핀 1
K. 나사 M4×8 11
L. 나사 M4×10 (흑) 2
M. 나사 M4×12 4
N. 잠금 플레이트 2
O. 결속 밴드 1
P. 가이드 1
Q. D7 라벨 1
R. 조작라벨 1

日本語

同梱品

A. 中折りユニット 1
B. レール前 1
C. レール後 1
D. 排紙ストッパー 1
E. サイドカバー前 1
F. サイドカバー後 1
G. 排紙ストックトレイ 1
H. 排紙トレイ 1
I. 中継搬送ユニット 1
J. ピン 1
K. ビス M4×8 11
L. ビス M4×10(黒) 2
M. ビス M4×12 4
N. ロックプレート 2
O. 結束バンド 1
P. ガイド 1
Q. D7 ラベル 1
R. 操作ラベル 1

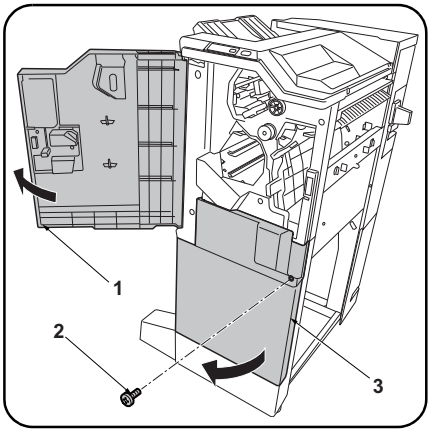

Be sure to remove any tape and/or cushioning material from supplied parts.	**Procedure** Before installing the center-folding unit, turn the MFP's main power switch off and unplug the power cable from the power supply. Install the document finisher, and then install the center-folding unit.	**1.** Open the upper front cover (1) of the document finisher. **2.** Remove the screw (2) and open the lower front cover (3). **(NOTICE)** Discard the screw (2) and do not fasten the lower front cover (3).
Veillez à retirer les morceaux de bande adhésive et/ou les matériaux de rembourrage des pièces fournies.	**Procédure** Avant d'installer la plieuse mettre l'interrupteur d'alimentation principal du MFP hors tension et débrancher le câble d'alimentation de la prise de courant. Installer le finisseur de document, puis installer la plieuse.	**1.** Ouvrir le couvercle avant supérieur (1) du retoucheur de document. **2.** Déposer la vis (2) et ouvrir le couvercle avant inférieur (3). **(AVIS)** Jeter la vis (2) et ne pas fixer le capot inférieur avant (3).
Asegúrese de despegar todas las cintas y/o material amortiguador de las partes suministradas.	**Procedimiento** Antes de instalar la unidad de plegado, desconecte el interruptor de alimentación principal de la MFP y desenchufe el cable de alimentación de la toma de corriente. Instale primero el finalizador de documentos y luego instale la unidad de plegado.	**1.** Abra la cubierta frontal superior (1) del finalizador de documentos. **2.** Quite el tornillo (2) y abra la cubierta frontal inferior (3). **(AVISO)** Descarte el tornillo (2) y no ajuste la cubierta frontal inferior (3).
Entfernen Sie Klebeband und/oder Dämpfungsmaterial vollständig von den mitgelieferten Teilen.	**Verfahren** Bevor Sie mit dem Einbau der Mittenfalteinheit beginnen, stellen Sie sicher, dass der Hauptschalter des Kopierers ausgeschaltet und das Netzkabel aus der Steckdose gezogen ist. Bringen Sie den Dokument-Finisher zuerst und dann erst die Mittenfalteinheit an.	**1.** Öffnen Sie die obere vordere Abdeckung (1) des Dokument-Finishers. **2.** Entfernen Sie die Schraube (2) und öffnen Sie die untere vordere Abdeckung (3). **(HINWEIS)** Entsorgen Sie die Schraube (2) und befestigen Sie nicht die untere vordere Abdeckung (3).
Accertarsi di rimuovere tutti i nastri adesivi e/o il materiale di imbottitura dalle parti fornite.	**Procedura** Prima di installare l'unità di piegatura centrale, assicurarsi che l'interruttore principale della fotocopiatrice sia spento e che il cavo di alimentazione non sia inserito nella presa. Installare prima la finitrice e poi procedere all'installazione dell'unità di piegatura centrale.	**1.** Aprire il coperchio superiore anteriore (1) della finitrice di documenti. **2.** Rimuovere la vite (2) ed aprire il coperchio inferiore anteriore (3). **(NOTIFICA)** Eliminare le viti (2) e non fissare il coperchio inferiore anteriore (3).
如果附属品上带有固定胶带，缓冲材料时务必揭下。	**安装步骤** 安装中缝装订 — 折页单元前，请关闭 MFP 的主电源开关并从电源拔下电源线。 安装装订器，然后安装中缝装订 — 折页单元。	1. 打开装订器的前部上盖板（1）。 2. 拆除 1 颗螺丝（2），打开前部下盖板（3）。 （**注意**） 废除螺丝（2），前部下盖板（3）不需固定。
동봉품에 고정 테이프 , 완충재가 붙어 있는 경우에는 반드시 제거할 것 .	**장착순서** 중철 유니트를 설치할 때에는 반드시 MFP 본체의 주전원 스위치를 OFF 로 하고 전원플러그를 뺀 후 작업을 할 것 . 문서 피니셔를 설치 후 , 중철 유니트를 설치 할 것 .	1. 문서 피니셔 앞 상커버 (1) 를 엽니다 . 2. 나사 (2) 1 개를 제거하고 앞 하커버 (3) 를 엽니다 . **(주의)** 나사 (2) 는 폐기하고 전면 아래커버 (3) 는 고정하지 않습니다 .
同梱品に固定テープ、緩衝材がついている場合は、必ず取り外すこと。	**取付手順** 中折りユニットを設置するときは、必ず MFP 本体の主電源スイッチを OFF にし、電源プラグを抜いてから作業すること。 ドキュメントフィニッシャーを設置後、中折りユニットを設置すること。	1. ドキュメントフィニッシャーの前上カバー (1) を開く。 2. ビス (2) 1 本を外し、前下カバー (3) を開く。 （**注意**） ビス (2) は廃棄とし、前下カバー (3) は固定しない。

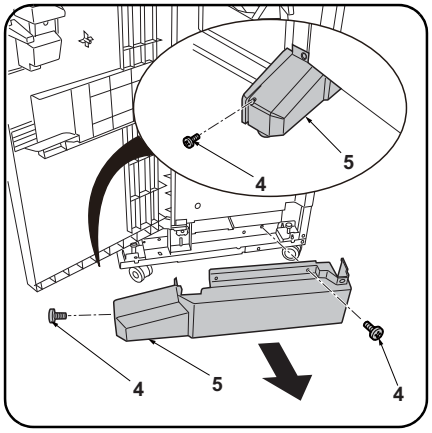

3.Remove the 2 screws (4) and remove the foot cover (5).

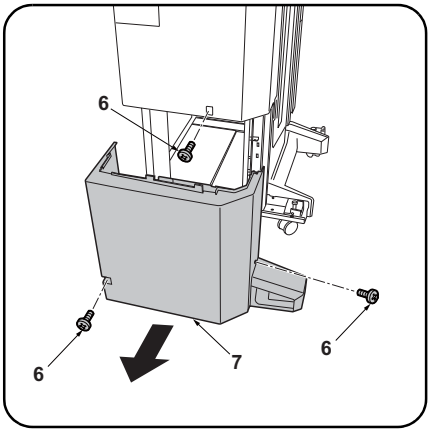

4.Remove the 3 screws (6) and remove the lower rear cover (7).

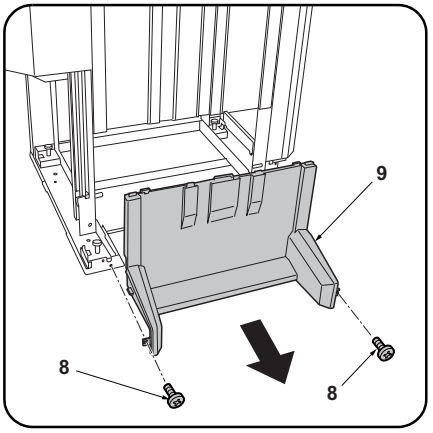

5.Remove 2 screws (8) and remove the lower middle cover (9).

3.Déposer les 2 vis (4) puis le couvercle du pied (5).

4.Déposer les 3 vis (6) puis le couvercle arrière inférieur (7).

5.Déposer les 2 vis (8) et le couvercle intermédiaire inférieur (9).

3.Quite los 2 tornillos (4) y quite la cubierta de la pata (5).

4.Quite los 3 tornillos (6) y quite la cubierta posterior inferior (7).

5.Quite los 2 tornillos (8) y quite la cubierta intermedia inferior (9).

3.Entfernen Sie die 2 Schrauben (4) und nehmen Sie die Fußabdeckung (5) ab.

4.Entfernen Sie die 3 Schrauben (6) und nehmen Sie die untere hintere Abdeckung (7) ab.

5.Entfernen Sie die 2 Schrauben (8) und nehmen Sie die untere mittlere Abdeckung (9) ab.

3.Rimuovere le 2 viti (4) e quindi rimuovere la copertura del piede (5).

4.Rimuovere le 3 viti (6) e quindi rimuovere il coperchio inferiore posteriore (7).

5.Rimuovere le 2 viti (8) e quindi rimuovere il pannello centrale inferiore (9).

---

3. 拆除 2 颗螺丝（4），拆下脚座盖板（5）。

4. 拆除 3 颗螺丝（6），拆下后部下盖板（7）。

5. 拆除 2 颗螺钉（8），拆下中部下盖板（9）。

---

3. 나사 (4) 2 개를 제거하고 , 풋커버 (5) 를 제거합니다 .

4. 나사 (6) 3 개를 제거하고 , 뒤 하커버 (7) 를 제거합니다 .

5. 나사 (8) 2 개를 제거하고 중하 커버 (9) 를 떼어 냅니다 .

---

3. ビス (4)2 本を外し、フットカバー(5) を取り外す。

4. ビス (6)3 本を外し、後下カバー(7) を取り外す。

5. ビス (8)2 本を外し、中下カバー(9) を取り外す。

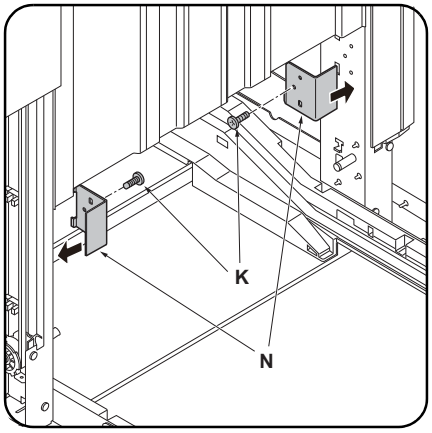

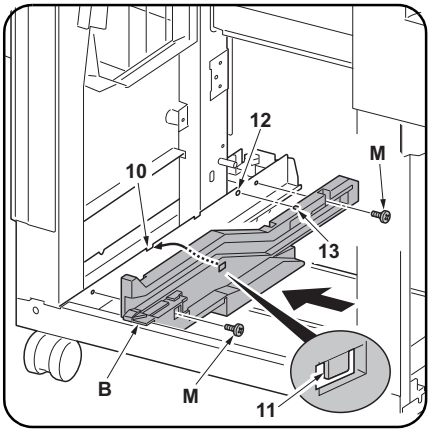

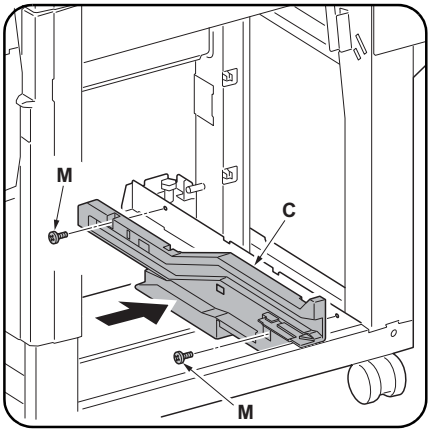

6. Install the lock plates (N) on the front and rear supports using an M4 × 8 screw (K) each.

7. Place the hook (11) of the front rail (B) on the notch (10) at the front of the document finisher, at the same time inserting the projection (13) on the front rail (B) in the hole (12) in the document finisher.
8. Fix the front rail (B) using 2 M4 × 12 screws (M).

9. Install the rear rail (C) at the rear of the document finisher using 2 M4 × 12 screws (M) in the same way.

---

6. Monter les plaques de verrouillage (N) sur les supports avant et arrière en procédant à l'aide d'une vis M4 × 8 (K) dans les deux cas.

7. Placer le crochet (11) de la glissière avant (B) dans l'encoche (10) à l'avant du retoucheur de document tout en insérant la saillie (13) de la glissière avant (B) dans le trou (12) du retoucheur de document.
8. Fixer la glissière avant (B) à l'aide de 2 vis M4 × 12 (M).

9. Monter la glissière arrière (C) au dos du retoucheur de document en procédant de la même façon et à l'aide de 2 vis M4 × 12 (M).

---

6. Instale las placas de cierre (N) en los soportes frontal y posterior usando un tornillo M4 × 8 (K) en cada uno.

7. Coloque el gancho (11) del carril frontal (B) en la muesca (10) de la parte frontal del finalizador de documentos al mismo tiempo que inserta el resalto (13) del carril frontal (B) en el orificio (12) del finalizador de documentos.
8. Fije el carril frontal (B) usando 2 tornillos M4 × 12 (M).

9. Instale el carril posterior (C) en la parte posterior del finalizador de documentos usando 2 tornillos M4 × 12 (M) de la misma forma.

---

6. Montieren Sie die Sperrplatten (N) an den vorderen und hinteren Stützen mit jeweils einer M4 × 8 Schraube (K).

7. Setzen Sie den Haken (11) der vorderen Schiene (B) in die Aussparung (10) vorne am Dokument-Finisher ein, und setzen Sie dabei auch den Vorsprung (13) an der vorderen Schiene (B) in die Öffnung (12) des Dokument-Finishers ein.
8. Befestigen Sie die vordere Schiene (B) mit den 2 M4 × 12 Schrauben (M).

9. Montieren Sie die hintere Schiene (C) auf gleiche Weise mit 2 M4 × 12 Schrauben (M) an der Rückseite des Dokument-Finishers.

---

6. Installare le piastre di bloccaggio (N) sui supporti anteriore e posteriore utilizzando una vite M4 × 8 (K) ciascuna.

7. Posizionare il gancio (11) della rotaia anteriore (B) sull'incavo (10) alla parte anteriore della finitrice di documenti, contemporaneamente inserire la la sporgenza (13) sulla rotaia anteriore (B) nel foro (12) nella finitrice di documenti.
8. Fissare la rotaia anteriore (B) utilizzando 2 viti M4 × 12 (M).

9. Installare la rotaia posteriore (C) alla parte posteriore della finitrice di documenti utilizzando 2 viti M4 × 12 (M) alla stessa maniera.

---

6. 使用各 1 颗 M4×8(K) 螺钉将锁定板 (N) 安装在前后的支柱上。

7. 将前部导轨 (B) 的挂钩 (11) 嵌入装订器前部的缺口 (10)，同时将前部导轨 (B) 的卡销 (13) 插入到装订器的孔 (12) 中。
8. 使用 2 颗 M4×12(M) 螺钉来固定前部导轨 (B)。

9. 按相同方法，使用 2 颗 M4×12(M) 螺钉将后部导轨 (C) 安装在装订器后部。

---

6. 잠금 플레이트 (N) 를 앞뒤 지주에 나사 M4×8(K) 각 1 개로 장착합니다 .

7. 문서 피니셔 앞의 이음부분 (10) 에 레일 앞 (B) 의 후크 (11) 를 걸고 동시에 문서 피니셔 구멍 (12) 에 레일 앞 (B) 의 보스 (13) 를 넣습니다 .
8. 나사 M4×12(M) 2 개로 레일 앞 (B) 을 고정합니다 .

9. 같은 방식으로 나사 M4×12(M) 2 개로 문서 피니셔 뒤에 레일 뒤 (C) 를 장착합니다 .

---

6. ロックプレート (N) を前後の支柱にビス M4×8(K) 各 1 本で取り付ける。

7. ドキュメントフィニッシャー前の切り欠き (10) にレール前 (B) のフック (11) を引っかけ、同時にドキュメントフィニッシャーの穴 (12) にレール前 (B) のボス (13) を入れる。
8. ビス M4×12(M)2 本でレール前 (B) を固定する。

9. 同様に、ビス M4×12(M)2 本で、ドキュメントフィニッシャー後にレール後 (C) を取り付ける。

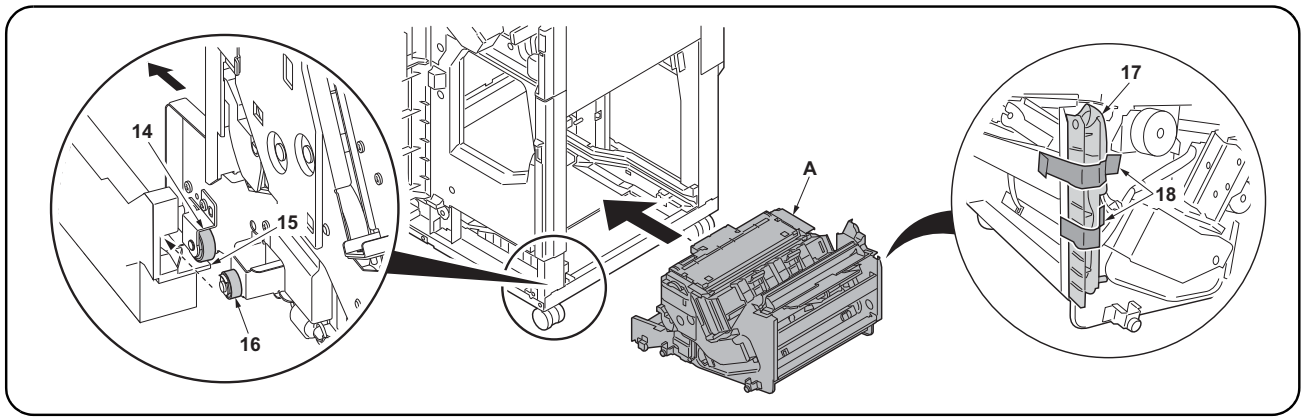

10. Place the left rollers (14) at the front and rear of the center-folding unit (A) on the tracks (15) on the inner sides of the rails, and roll in the direction shown. The middle rollers (16) will roll onto the rails.
11. Insert the center-folding unit (A) into the document finisher along the rails.
(NOTICE)
Insert without removing the fixing tape (18) for the wire guide (17). (The fixing tape (18) is removed at step 15)

---

10. Disposer les rouleaux gauche (14) à l'avant et à l'arrière de la plieuse (A) sur les voies (15) de côté interne des glissières et faire rouler dans la direction indiquée. Les rouleaux intermédiaires (16) vont se placer d'eux-mêmes sur les glissières.
11. Insérer la plieuse (A) dans le retoucheur de document le long des glissières.
(AVIS)
Insérer sans enlever la bande adhésive de fixation (18) pour le guide câble (17). (La bande adhésive de fixation (18) est enlevée à l'étape 15).

---

10. Coloque los rodillos izquierdos (14) en las partes frontal y posterior de la unidad de plegado (A) en las pistas (15) de los lados internos de los carriles y hágalos rodar en la dirección de la ilustración. Los rodillos intermedios (16) rodarán sobre los carriles.
11. Inserte la unidad de plegado (A) en el finalizador de documentos a lo largo de los carriles.
(AVISO)
Inserte sin quitar la cinta de fijación (18) de la guía para el cable (17). (La cinta de fijación (18) se quita en el paso 15.)

---

10. Setzen Sie die linken Rollen (14) an der Vorderseite und Rückseite der Mittenfalteinheit (A) auf die Bahnen (15) an den Innenseiten der Schienen, und rollen Sie sie in der dargestellten Richtung. Die mittleren Rollen (16) rollen nun auf die Schienen.
11. Schieben Sie die Mittenfalteinheit (A) entlang den Schienen in den Dokument-Finisher ein.
(HINWEIS)
Schieben Sie sie ein, ohne das Klebeband (18) für die Kabelführung (17) zu entfernen. (Das Klebeband (18) wird bei Schritt 15 entfernt.)

---

10. Posizionare i rulli di sinistra (14) alla parte anteriore e posteriore dell'unità di piegatura centrale (A) sulle piste (15) sui lati interni delle rotaie, e farli scorrere nella direzione mostrata. I rulli intermedi (16) scorreranno sulle rotaie.
11. Inserire l'unità di piegatura centrale (A) nella finitrice di documenti lungo le rotaie.
(NOTIFICA)
Inserire senza rimuovere il nastro di fissaggio (18) per la guida cavi (17). (Il nastro di fissaggio (18) viene rimosso al punto 15)

---

10. 将中缝装订一折页单元 (A) 前后的左侧滑轮 (14) 放在导轨内侧的转动部 (15) 上，并按箭头方向转动。将中间滑轮 (16) 插入到导轨上。
11. 将中缝装订一折页单元 (A) 沿着导轨插入到装订器中。
（**注意**）
插入时不需剥除电线导板（17）的固定胶带（18）。（在步骤 15 时剥除固定胶带（18））

---

10. 접기 유니트 (A) 의 앞뒤에 있는 좌측 코로 (14) 를 레일 내측에 있는 굴림부 (15) 에 얹고 화살표 방향으로 굴립니다 . 중간코로 (16) 가 레일에 삽입됩니다 .
11. 접기 유니트 (A) 를 레일에 붙여 문서 피니셔에 삽입합니다 .
(주의)
전선 가이드 (17) 의 고정 테이프 (18) 를 떼어 내지 않고 삽입할 것 . (고정 테이프 (18) 는 순서 15 에서 떼어 냅니다 .)

---

10. 中折りユニット (A) の前後にある左コロ (14) を、レールより内側にある転がし部 (15) に乗せ、矢印方向に転がす。中間コロ (16) がレールに挿入される。
11. 中折りユニット (A) をレールに沿ってドキュメントフィニッシャーに挿入する。
（**注意**）
電線ガイド (17) の固定テープ (18) を剥がさずに挿入すること。(固定テープ (18) は手順 15 で剥がす)

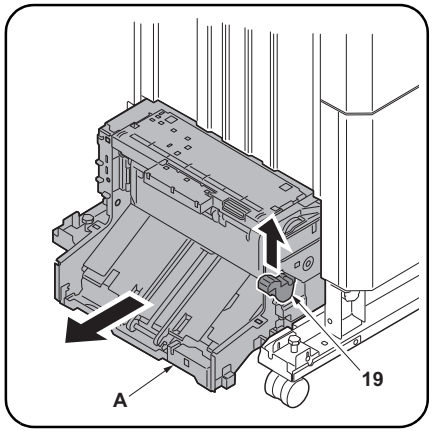

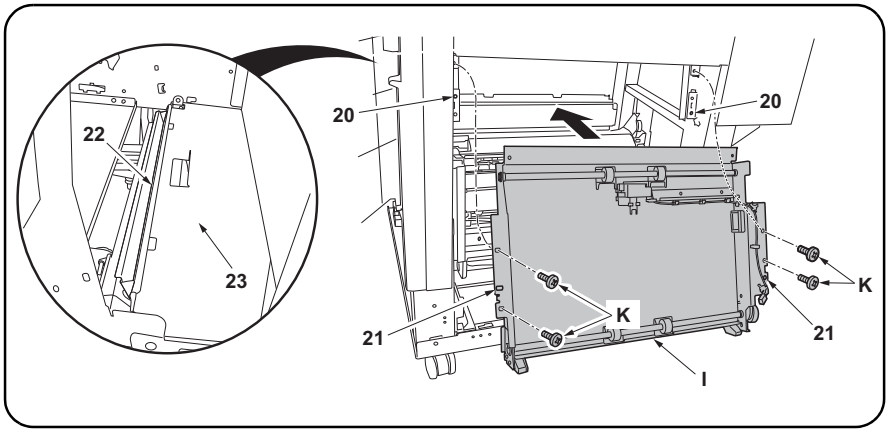

12. Release the lock lever (19) and pull out the center-folding unit (A) to the left of the document finisher.

13. Align the holes (21) in the relay paper conveying unit (I) with the 2 projections (20) on the document finisher. Install so that the lip (22) on the top frame of the relay paper conveying unit rests on the document finisher's frame (23).
14. Install the relay paper conveying unit (I) using 4 M4 × 8 screws (K).

---

12. Libérer le levier de verrouillage (19) et sortir la plieuse (A) par la gauche du retoucheur de document.

13. Aligner les trous (21) de l'unité de transport de relais (I) avec les 2 saillies (20) du retoucheur de document. Procéder de sorte que la lèvre (22) du châssis supérieur de l'unité de transport de relais repose sur le châssis du retoucheur de document (23).
14. Installer l'unité de transport de relais (I) à l'aide de 4 vis M4 × 8 (K).

---

12. Libere la palanca de bloqueo (19) y extraiga la unidad de plegado (A) hacia la izquierda del finalizador de documentos.

13. Alinee los orificios (21) de la unidad de transporte de papel (I) con los dos resaltos (20) del finalizador de documentos. Instale de forma tal que el reborde (22) del marco superior de la unidad de transporte de papel apoye en el marco del finalizador de documentos (23).
14. Instale la unidad de transporte de papel por relevador (I) usando 4 tornillos M4 × 8 (K).

---

12. Lösen Sie den Verriegelungshebel (19) und ziehen Sie die Mittenfalteinheit (A) zur linken Seite des Dokument-Finishers heraus.

13. Richten Sie die Öffnungen (21) der eingesetzten Papierfördereinheit (I) auf die 2 Vorsprünge (20) des Dokument-Finishers aus. Montieren Sie so, dass die Lippe (22) am oberen Rahmen der eingesetzten Papierfördereinheit auf dem Rahmen des Dokument-Finishers (23) ruht.
14. Montieren Sie die eingesetzte Papierfördereinheit (I) mit 4 M4 × 8 Schrauben (K).

---

12. Rilasciare la leva di blocco (19) e quindi estrarre l'unità di piegatura centrale (A) alla sinistra della finitrice di documenti.

13. Allineare i fori (21) nell'unità relay di trasporto carta (I) con le 2 sporgenze (20) sulla finitrice di documenti. Installare in modo che il bordo (22) sulla struttura superiore dell'unità relay di trasporto carta rimanga sulla struttura (23) della finitrice di documenti.
14. Installare l'unità relay di trasporto carta (I) utilizzando 4 viti M4 × 8 (K).

---

12. 解除锁定杆（19），将中缝装订－折页单元（A）从文档整理器的左侧拉出。

13. 将装订器的 2 处突出部（20）与中间搬运单元（I）的孔（21）对齐。将中间搬运单元上部框架的弯曲部（22）放在装订器的框架上（23）以进行安装。
14. 使用 4 颗 M4×8(K) 螺钉来安装后中间搬运单元（I）。

---

12. 잠금레버 (19) 를 해제하고 중철 유니트 (A) 를 문서 피니셔 좌측으로 이동시킵니다 .

13. 문서 피니셔의 돌기 (20) 2 개로 중계반송 유니트 (I) 의 구멍 (21) 을 맞춥니다 . 중계반송 유니트 상부 플레임의 구부러진 부분 (22) 이 문서 피니셔의 플레임 (23) 에 얹히게 장착합니다 .
14. 나사 M4×8(K) 4 개로 중계반송 유니트 (I) 를 장착합니다 .

---

12. ロックレバー(19) を解除し、中折りユニット (A) をドキュメントフィニッシャー左側へ引き出す。

13. ドキュメントフィニッシャーの突起 (20)2 個に中継搬送ユニット (I) の穴 (21) を合わせる。中継搬送ユニット上部フレームの折曲がり部 (22) がドキュメントフィニッシャーのフレーム (23) に乗るように取り付ける。
14. ビス M4×8(K)4 本で、中継搬送ユニット (I) を取り付ける。

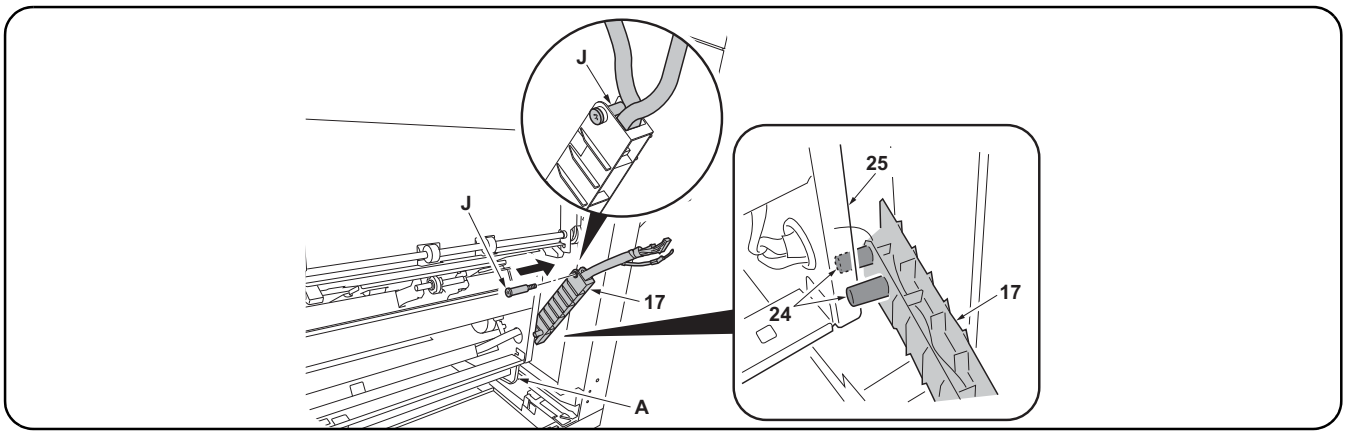

15. Remove the fixing tape (18) for the wire guide (17) and insert the pin (J) into the wire guide (17), with the 2 projections (24) on either side of the frame (25).
(NOTICE)
Insert the pin (J) to keep wires in the wire guide (17).
16. Screw the pin (J) into the document finisher to anchor the wire guide (17).

---

15. Enlever la bande adhésive de fixation (18) du guide câble (17) et insérer la goupille (J) dans le guide câble (17) avec les 2 saillies (24) de chaque côté du bâti (25).
(AVIS)
Insérer la goupille (J) pour que les câbles demeurent dans le guide câble (17).
16. Visser la goupille (J) dans le retoucheur de document pour fixer le guide câble (17) en place.

---

15. Quite la cinta de fijación (18) de la guía para el cable (17) e inserte el pasador (J) en la guía para el cable (17) con los 2 resaltos (24) a cada lado del marco (25).
(AVISO)
Inserte el pasador (J) para mantener los cables en la guía para el cable (17).
16. Atornille el pasador (J) en el finalizador de documentos para anclar la guía para el cable (17).

---

15. Entfernen Sie das Klebeband (18) für die Kabelführung (17) und stecken Sie die Rändelschraube (J) in die Kabelführung (17), wobei der Rahmen (25) zwischen den 2 Vorsprüngen (24) liegen muss.
(HINWEIS)
Stecken Sie die Rändelschraube (J) ein, um die Kabel in der Kabelführung (17) zu halten.
16. Schrauben Sie die Rändelschraube (J) in den Dokument-Finisher, um die Kabelführung (17) zu verankern.

---

15. Rimuovere il nastro di fissaggio (18) per la guida cavi (17) e quindi inserire il perno (J) nella guida cavi (17), con le 2 sporgenze (24) su ciascun lato della struttura (25).
(NOTIFICA)
Inserire il perno (J) per mantenere i cavi nella guida cavi (17).
16. Avvitare il perno (J) nella finitrice di documenti per ancorare la guida cavi (17).

---

15. 剥除电线导板（17）的固定胶带（18），使框架（25）处于 2 个卡销（24）之间，将 1 个销子（J）从电线导板（17）上穿过。
（**注意**）
将销钉（J）穿过电线导板（17）时，注意避免电线露出电线导板（17）外。
16. 将销钉（J）的螺纹部分安装到装订器上，以固定电线导板（17）。

---

15. 전선 가이드 (17) 의 고정 테이프 (18) 를 떼어 내고 보스 (24) 2 개의 사이에 프레임 (25) 이 들어 있는 상태에서 핀 (J) 1 개를 전선 가이드 (17) 에 통과시킵니다 .
(주의)
핀 (J) 은 전선이 전선 가이드 (17) 에서 나오지 않도록 통하게 합니다 .
16. 핀 (J) 의 나사부분을 문서 피니셔에 장착하고 전선 가이드 (17) 를 고정합니다 .

---

15. 電線ガイド (17) の固定テープ (18) を剥がし、ボス (24)2 本の間にフレーム (25) が入っている状態で、ピン (J)1 本を電線ガイド (17) に通す。
（**注意**）
ピン (J) は電線が電線ガイド (17) から出ないように通す。
16. ピン (J) のネジ部分をドキュメントフィニッシャーに取り付け、電線ガイド (17) を固定する。

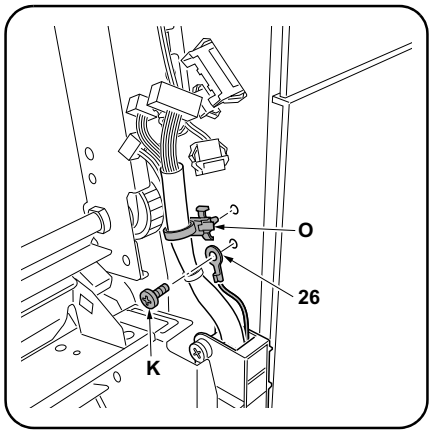

17. Install the ground wire (26) to the frame using an M4 × 8 screw (K).
18. Install the binding band (O) to the wires and fit the band into the frame.

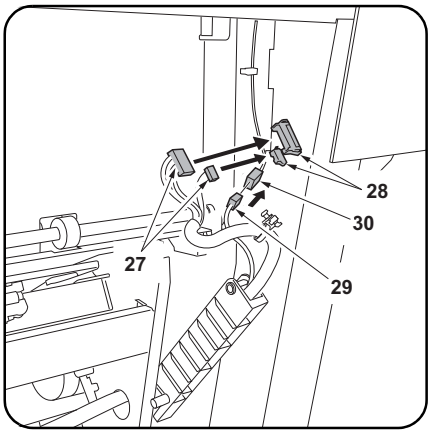

19. Plug the 2 connectors (27) into the connectors (28) on the document finisher.
20. Plug the connector (29) into the connector (30) on the relay paper conveying unit (I).

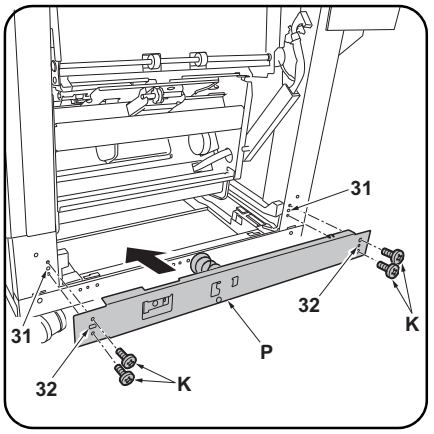

21. Align holes (32) at 2 locations in the guide (P) with projections (31) on the document finisher.
22. Install the guide (P) on the document finisher using 4 M4 × 8 screws (K).

---

17. Fixer le câble de terre (26) au châssis en procédant à l'aide d'une vis M4 × 8 (K).
18. Monter le collier de fixation (O) sur les câbles et assujettir le collier au châssis.

19. Enficher les 2 connecteurs (27) dans les connecteurs (28) du retoucheur de document.
20. Enficher le connecteur (29) dans le connecteur (30) de l'unité de transport de relais (I).

21. Aligner les trous (32) en 2 endroits du guide (P) avec les saillies (31) du retoucheur de document.
22. Monter le guide (P) sur le retoucheur de document à l'aide de 4 vis M4 × 8 (K).

---

17. Instale el cable de conexión a tierra (26) en el marco usando un tornillo M4 × 8 (K).
18. Instale la correa de sujeción (O) en los cables y coloque la correa en el marco.

19. Enchufe los 2 conectores (27) en los conectores (28) del finalizador de documentos.
20. Enchufe el conector (29) en el conector (30) de la unidad de transporte de papel por relevador (I).

21. Alinee los orificios (32) de los 2 lugares de la guía (P) con los resaltos (31) del finalizador de documentos.
22. Instale la guía (P) en el finalizador de documentos usando 4 tornillos M4 × 8 (K).

---

17. Montieren Sie das Massekabel (26) mit einer M4 × 8 Schraube (K) an den Rahmen.
18. Bringen Sie das Schellenband (O) an den Kabeln an und setzen Sie das Band in den Rahmen ein.

19. Verbinden Sie die 2 Steckverbinder (27) mit den Steckverbindern (28) des Dokument-Finishers.
20. Verbinden Sie den Steckverbinder (29) mit dem Steckverbinder (30) der eingesetzten Papierfördereinheit (I).

21. Richten Sie die Öffnungen (32) an 2 Stellen in der Führung (P) auf die Vorsprünge (31) des Dokument-Finishers aus.
22. Montieren Sie die Führung (P) mit 4 M4 × 8 Schrauben (K) am Dokument-Finisher.

---

17. Installare il cavo di terra (26) alla struttura utilizzando una vite M4 × 8 (K).
18. Installare la fascetta di legatura (O) ai cavi e quindi fissare la fascetta nella struttura.

19. Inserire i 2 connettori (27) nei connettori (28) sulla finitrice di documenti.
20. Inserire il connettore (29) nel connettore (30) sull'unità relay di trasporto carta (I).

21. Allineare i fori (32) alle 2 posizioni nella guida (P) con le sporgenze (31) sulla finitrice di documenti.
22. Installare la guida (P) sulla finitrice di documenti utilizzando 4 viti M4 × 8 (K).

---

17. 使用 M4×8(K) 螺钉将装接地线 (26) 安装到框架上。
18. 在电线上安装束线带 (O)，将束线带 (O) 嵌入到框架上。

19. 将 2 个连接器 (27) 与装订器的连接器 (28) 相连接。
20. 将连接器 (29) 与中间搬运单元 (H) 的连接器 (30) 相连接。

21. 将装订器的 2 处突出部 (31) 与导板 (P) 的孔 (32) 对齐。
22. 使用 4 颗螺钉 M4×8(K) 将导板 (P) 安装到装订器上。

---

17. 나사 M4×8(K) 로 접지선 (26) 을 플레임에 장착합니다 .
18. 전선에 결속 밴드 (O) 를 장착하고 플레임에 결속 밴드 (O) 를 꽂습니다 .

19. 커넥터 (27) 2 개를 문서 피니셔의 커넥터 (28) 에 접속합니다 .
20. 커넥터 (29) 를 중계 유니트 (I) 의 커넥터 (30) 에 접속합니다 .

21. 문서 피니셔의 돌기 (31) 2 곳을 가이드 (P) 의 구멍 (32) 에 맞춥니다 .
22. 나사 M4×8(K) 4 개로 문서 피니셔에 가이드 (P) 를 장착합니다 .

---

17. ビス M4×8(K) でアース線 (26) をフレームに取り付ける。
18. 電線に結束バンド (O) を取り付け、フレームに結束バンド (O) をはめ込む。

19. コネクター(27)2 個をドキュメントフィニッシャーのコネクター(28) に接続する。
20. コネクター(29) を中継搬送ユニット (I) のコネクター(30) に接続する。

21. ドキュメントフィニッシャーの突起 (31)2 箇所にガイド (P) の穴 (32) に合わせる。
22. ビス M4×8(K)4 本でドキュメントフィニッシャーにガイド (P) を取り付ける。

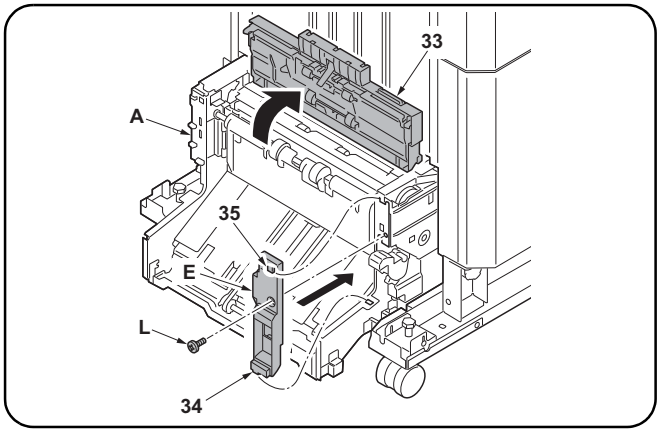

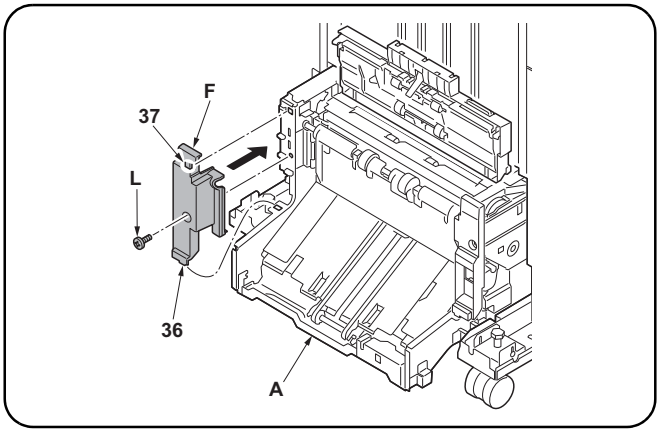

23. Open the eject cover (33).
24. Engage the projection (34) and hook (35) on the front side cover (E) with the center-folding unit (A). Complete installation of the front side cover (E) using an M4 × 10 screw (black) (L).

25. Engage the projection (36) and hook (37) on the rear side cover (F) with the center-folding unit (A). Complete installation of the rear side cover (F) using an M4 × 10 screw (black) (L).

---

23. Ouvrir le capot d'éjection (33).
24. Engager la saillie (34) et le crochet (35) du capot latéral avant (E) dans la plieuse (A). Finaliser l'installation du capot latéral avant (E) à l'aide d'une vis M4 × 10 (noire) (L).

25. Engager la saillie (36) et le crochet (37) du capot latéral arrière (F) dans la plieuse (A). Finaliser l'installation du capot latéral arrière (F) à l'aide d'une vis M4 × 10 (noire) (L).

---

23. Abra la cubierta de expulsión (33).
24. Enganche el resalto (34) y el gancho (35) de la cubierta lateral frontal (E) con la unidad de plegado (A). Complete la instalación de la cubierta lateral frontal (E) usando un tornillo M4 × 10 (negro) (L).

25. Enganche el resalto (36) y el gancho (37) de la cubierta lateral posterior (F) con la unidad de plegado (A). Complete la instalación de la cubierta lateral posterior (F) usando un tornillo M4 × 10 (negro) (L).

---

23. Öffnen Sie die Auswurfabdeckung (33).
24. Hängen Sie den Vorsprung (34) und den Haken (35) der vorderen Seitenabdeckung (E) in die Mittenfalteinheit (A) ein. Befestigen Sie die vordere Seitenabdeckung (E) mit einer M4 × 10 Schraube (schwarz) (L).

25. Hängen Sie den Vorsprung (36) und den Haken (37) der hinteren Seitenabdeckung (F) in die Mittenfalteinheit (A) ein. Befestigen Sie die hintere Seitenabdeckung (F) mit einer M4 × 10 Schraube (schwarz) (L).

---

23. Aprire il coperchio di espulsione carta (33).
24. Innestare la sporgenza (34) e il gancio (35) sul coperchio laterale anteriore (E) con l'unità di piegatura centrale (A). Completare l'installazione del coperchio laterale anteriore (E) utilizzando una vite M4 × 10 (nera) (L).

25. Innestare la sporgenza (36) e il gancio (37) sul coperchio laterale posteriore (F) con l'unità di piegatura centrale (A). Completare l'installazione del coperchio laterale posteriore (F) utilizzando una vite M4 × 10 (nera) (L).

---

23. 打开排纸盖板 (33)。
24. 将前部侧盖板 (E) 的突出部 (34) 以及挂钩 (35) 嵌入到中缝装订一折页单元 (A) 中，使用 1 颗 M4×10（黑）(L) 螺钉来安装前部侧盖板 (E)。

25. 将后部侧盖板 (F) 的突出部 (36) 以及挂钩 (37) 嵌入到中缝装订一折页单元 (A) 中，使用 1 颗 M4×10（黑）(L) 螺钉来安装后部侧盖板 (F)。

---

23. 배출 커버 (33) 를 엽니다 .
24. 사이드 커버 앞 (E) 의 돌기 (34) 및 후크 (35) 를 접기 유니트 (A) 에 꽂습니다 . 나사 M4×10 (흑) (L) 1 개로 사이드 커버 앞 (E) 을 장착합니다 .

25. 사이드 커버 뒤 (F) 의 돌기 (36) 및 후크 (37) 를 접기 유니트 (A) 에 꽂습니다 . 나사 M4×10 (흑) (L) 1 개로 사이드 커버 뒤 (F) 를 장착합니다 .

---

23. 排出カバー(33) を開く。
24. サイドカバー前 (E) の突起 (34) およびフック (35) を、中折りユニット (A) にはめ込む。
ビス M4×10(黒)(L)1 本で、サイドカバー前 (E) を取り付ける。

25. サイドカバー後 (F) の突起 (36) およびフック (37) を、中折りユニット (A) にはめ込む。
ビス M4×10(黒)(L)1 本で、サイドカバー後 (F) を取り付ける。

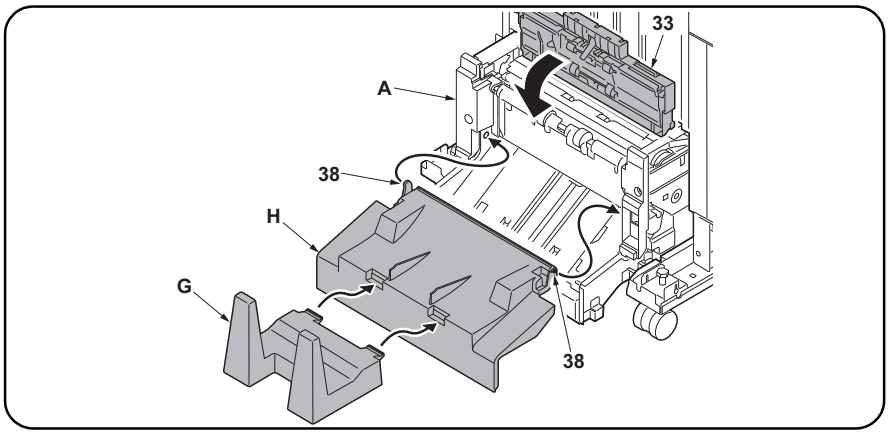

26. Insert the 2 pins (38) on the output tray (H) in the holes in the center-folding unit (A) to install the tray.
27. Install the output stock tray (G) on the output tray (H).
28. Close the eject cover (33).

---

26. Insérer les 2 goupilles (38) du plateau de sortie (H) dans les trous de la plieuse (A) pour installer le plateau.
27. Installer la butée de sortie du papier (G) sur le plateau de sortie (H).
28. Fermer le capot d'éjection (33).

---

26. Inserte los 2 pasadores (38) de la bandeja de salida (H) en los orificios de la unidad de plegado (A) para instalar la bandeja.
27. Instale la bandeja de recolección de papel de salida (G) en la bandeja de salida (H).
28. Cierre la cubierta de expulsión (33).

---

26. Stecken Sie die 2 Rändelschrauben (38) des Ausgabefachs (H) in die Öffnungen der Mittenfalteinheit (A) ein, um das Fach zu installieren.
27. Bringen Sie das Ausgabestapelfach (G) am Ausgabefach (H) an.
28. Schließen Sie die Auswurfabdeckung (33).

---

26. Inserire i 2 perni (38) sul vassoio di uscita (H) nei fori sull'unità di piegatura centrale (A) per installare il vassoio.
27. Installare il vassoio di uscita stoccaggio (G) sul vassoio di uscita (H).
28. Chiudere il coperchio di esplusione carta (33).

---

26. 将排纸托盘 (H) 的 2 根销钉 (38) 插入中缝装订一折页单元 (A) 的孔中，以安装排纸托盘 (H)。
27. 将堆纸托盘 (G) 安装到排纸托盘 (H) 上。
28. 关闭排纸盖板 (33)。

---

26. 배지트레이 (H) 의 핀 (38) 2 개를 접기 유니트 (A) 의 구멍에 넣고 배지 트레이 (H) 를 장착합니다 .
27. 배지 저장 트레이 (G) 를 배지 트레이 (H) 에 장착합니다 .
28. 배출커버 (33) 를 닫습니다 .

---

26. 排紙トレイ (H) のピン (38)2 本を中折りユニット (A) の穴に入れ、排紙トレイ (H) を取り付ける。
27. 排紙ストックトレイ (G) を排紙トレイ (H) に取り付ける。
28. 排出カバー(33) を閉じる。

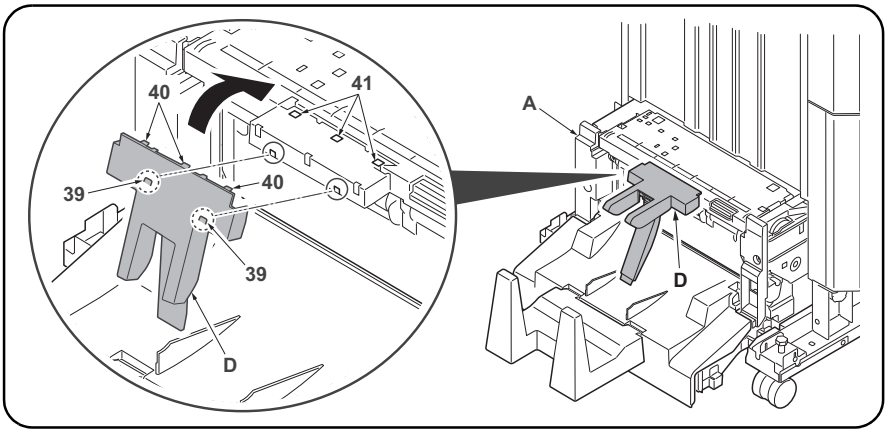

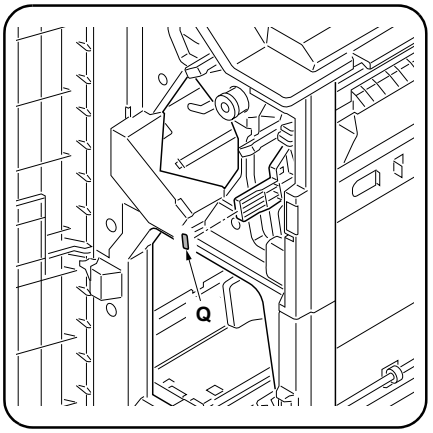

29. Insert the 2 projections (39) on the back of the output stopper (D) in the portions circled on the center-folding unit (A).
Fit the 3 hooks (40) on the output stopper (D) in the holes (41) in the center-folding unit (A).

30. Adhere the D7 label (Q) at the location shown in the figure.

---

29. Insérer les 2 saillies (39) au dos de la butée de sortie (D) dans les parties encerclées de la plieuse (A).
Assujettir les 3 crochets (40) de la butée de sortie (D) dans les trous (41) de la plieuse (A).

30. Apposer l'étiquette D7 (Q) à l'endroit repéré sur la figure.

---

29. Inserte los 2 resaltos (39) de la parte posterior del tope de salida (D) en las porciones marcadas con un círculo de la unidad de plegado (A).
Coloque los 3 ganchos (40) del tope de salida (D) en los orificios (41) de la unidad de plegado (A).

30. Adhiera la etiqueta D7 (Q) en el lugar que se muestra en la ilustración.

---

29. Setzen Sie die 2 Vorsprünge (39) auf der Rückseite des Ausgabeanschlags (D) in die mit Kreis bezeichneten Positionen der Mittenfalteinheit (A) ein.
Setzen Sie die 3 Haken (40) des Ausgabeanschlags (D) in die Öffnungen (41) der Mittenfalteinheit (A) ein.

30. Kleben Sie den D7 Aufkleber (Q) an der abgebildeten Stelle an.

---

29. Inserire le 2 sporgenze (39) sulla parte posteriore del fermo di uscita (D) nelle porzioni cerchiate sull'unità di piegatura centrale (A).
Fissare i 3 ganci (40) sul fermo di uscita (D) nei fori (41) nell'unità di piegatura centrale (A).

30. Far aderire l'etichetta D7 (Q) alla posizione mostrata nella figura.

---

29. 将排纸挡板 (D) 内侧的 2 处突出部 (39) 插入到中缝装订一折页单元 (A) 的圆框部。
将排纸挡板 (D) 的 3 个挂钩 (40) 嵌入到中缝装订一折页单元 (A) 的孔 (41) 中。

30. 在图示位置黏贴 D7 标签 (Q)。

---

29. 배지 스토퍼 (D) 의 안쪽에 있는 돌기 (39) 2 곳을 접기 유니트 (A) 의에 삽입합니다 .
배지 스토퍼 (D) 의 후크 (40) 3 곳을 접기 유니트 (A) 의 구멍 (41) 에 끼웁니다 .

30. D7 라벨 (Q) 을 그림의 위치에 붙입니다 .

---

29. 排紙ストッパー(D) の裏側にある突起 (39)2 箇所を中折ユニット (A) の丸枠部に挿入する。
排紙ストッパー(D) のフック (40)3 箇所を中折りユニット (A) の穴 (41) にはめ込む。

30. D7 ラベル (Q) を図の位置に貼り付ける。

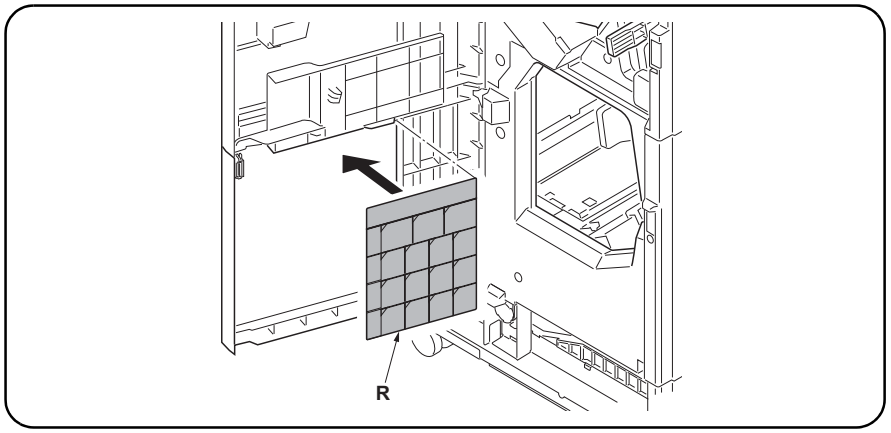

31. Adhere the Operation label (R) at the location shown in the figure.
32. Reinstall the foot cover (5) and lower rear cover (7).
33. Close the lower front cover (3) and the upper front cover (1).

---

31. Apposer l'étiquette de fonctionnement (R) à l'endroit repéré sur la figure.
32. Reposer le couvercle du pied (5) et le couvercle arrière inférieur (7).
33. Fermer le capot inférieur avant (3) et le couvercle avant supérieur (1).

---

31. Adhiera la etiqueta de funcionamiento (R) en el lugar que se muestra en la ilustración.
32. Vuelva a instalar la cubierta de la pata (5) y la cubierta posterior inferior (7).
33. Cierre la cubierta frontal inferior (3) y la cubierta frontal superior (1).

---

31. Kleben Sie den Bedienungsaufkleber (R) an der abgebildeten Stelle an.
32. Bringen Sie die Fußabdeckung (5) und die untere hintere Abdeckung (7) wieder an.
33. Schließen Sie die untere vordere Abdeckung (3) und die obere vordere Abdeckung (1).

---

31. Far aderire l'etichetta di operazione (R) alla posizione mostrata nella figura.
32. Reinstallare la copertura del piede (5) e il coperchio inferiore posteriore (7).
33. Chiudere il coperchio inferiore anteriore (3) e il coperchio superiore anteriore (1).

---

31. 在图示位置黏贴操作标签 (R)。
32. 按原样安装脚座盖板 (5) 和后部下盖板 (7)。
33. 关闭前部下盖板 (3) 和前部上盖板 (1)。

---

31. 조작 라벨 (R) 을 그림의 위치에 붙입니다 .
32. 풋커버 (5) 및 뒤하 커버 (7) 를 원래대로 장착합니다 .
33. 전면 아래커버 (3) 및 전면 윗커버 (1) 를 닫습니다 .

---

31. 操作ラベル (R) を図の位置に貼り付ける。
32. フットカバー(5) および後下カバー(7) を元通りに取り付ける。
33. 前下カバー(3) および前上カバー(1) を閉じる。

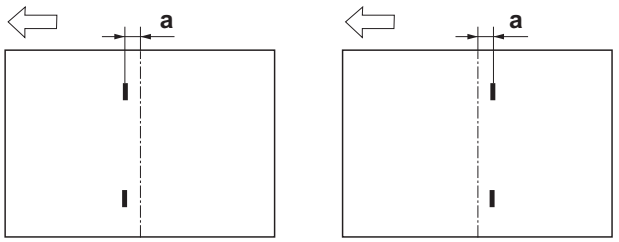

Adjustment of centerfold-stapling position
Check the distance (a) from the stapling position to the center of the paper. If the distance (a) is over the reference value, follow the procedure below to adjust the position.
<Reference value (a)> ±2 mm

1. Set maintenance mode U246, select Booklet and Staple Pos.
2. Adjust the values.
3. Press the Start key to confirm the setting value.

Réglage de la position d'agrafage des pages centrales dépliables
Vérifier la distance (a) entre la position d'agrafage et le milieu de la feuille de papier. Si cette distance (a) est supérieure à la valeur de référence, régler la position en procédant de la manière suivante.
<Valeur de référence (a)> ±2 mm

1. Passer en mode maintenance U246, sélectionner Booklet et Staple Pos.
2. Régler les valeurs.
3. Appuyer sur la touche de Start pour confirmer la valeur de réglage.

Ajuste de la posición de grapado de la unidad de plegado
Compruebe la distancia (a) desde la posición de grapado con respecto al centro del papel. Si dicha distancia (a) supera el valor de referencia, realice el siguiente procedimiento para ajustar la posición.
<Valor de referencia (a)> ±2 mm

1. Entre en el modo de mantenimiento U246, seleccione Booklet y Staple Pos.
2. Ajuste los valores.
3. Pulse la tecla de Start para confirmar el valor de configuración.

Einstellung der Mittenfalt-Heftposition
Überprüfen Sie den Abstand (a) zwischen der Heftposition und der Papiermitte. Falls der Abstand (a) größer als der Bezugswert ist, ist die Position gemäß der nachstehenden Prozedur nachzustellen.
<Bezugswert (a)> ±2 mm

1. Schalten Sie in den Wartungsmodus U246, wählen Sie Booklet und Staple Pos.
2. Die Werte einstellen.
3. Den Einstellwert durch Drücken der Start-Taste bestätigen.

Regolazione della posizione di cucitura dell'unità di piegatura centrale
Controllare la distanza (a) dalla posizione di spillatura al centro del foglio. Se la distanza (a) è superiore al valore di riferimento, seguire la procedura riportata sotto per regolare la posizione.
<Valore di riferimento (a)> ±2 mm

1. Impostare la modalità manutenzione U246, selezionare Booklet e Staple Pos.
2. Regolare i valori.
3. Premere il tasto di Start per confermare il valore dell'impostazione.

中缝装订位置调整
检查从装订位置到纸张中心的距离 (a)。如果距离 (a) 超出标准值范围，按照下列步骤调节装订位置。
＜标准值 (a) ＞ ±2mm

1. 设置维护模式 U246，选择 Booklet、Staple Pos。
2. 调整设定值。
3. 按 Start 键，以确定设定值。

접기 스테이플 위치조정
스테이플 위치에서 용지 중앙까지의 거리離 (a) 를 확인합니다 . 거리 (a) 가 기준치 외의 경우에는 다음 순서로 조정을 합니다 .
＜기준치 (a) ＞ ±2mm

1. 메인터넌스 모드 U246 을 세트하고 Booklet, Staple Pos 를 선택합니다 .
2. 설정치를 조정합니다 .
3. 시작키를 누르고 설정치를 확인합니다 .

中とじステープル位置調整
ステープル位置から用紙センターまでの距離 (a) を確認する。距離 (a) が基準値外の場合、次の手順で調整を行う。
＜基準値 (a) ＞ ±2mm

1. メンテナンスモード U246 をセットし、Booklet、Staple Pos を選択する。
2. 設定値を調整する。
3. スタートキーを押し、設定値を確定する。

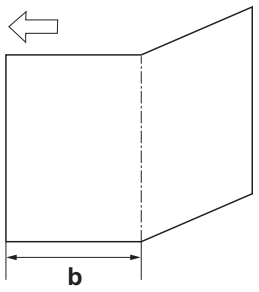

Adjustment of center folding position
Check the distance (b) from the edge of the paper to the center folding position. If the distance (b) is over the reference value, follow the procedure below to adjust the position.
<Reference value (b)>
A4, Letter: Length of paper × 1/2 ±2 mm
A3, Ledger, B4: Length of paper × 1/2 ±3 mm

1. Set maintenance mode U246, select Booklet and Booklet Pos.
2. Adjust the values.
3. Press the Start key to confirm the setting value.

Réglage de la position de pliage central
Vérifier la distance (b) entre le bord de la feuille de papier et la position de pliage central. Si cette distance (b) est supérieure à la valeur de référence, régler la position en procédant de la manière suivante.
<Valeur de référence (b)>
A4, Letter : Longueur de la feuille × 1/2 ±2 mm
A3, Ledger, B4: Longueur de la feuille × 1/2 ±3 mm

1. Passer en mode maintenance U246, sélectionner Booklet et Booklet Pos.
2. Régler les valeurs.
3. Appuyer sur la touche de Start pour confirmer la valeur de réglage.

Ajuste de la posición de plegado
Compruebe la distancia (b) desde el borde del papel a la posición de plegado. Si dicha distancia (b) supera el valor de referencia, realice el siguiente procedimiento para ajustar la posición.
<Valor de referencia (b)>
A4, Letter: Longitud del papel × 1/2 ±2 mm
A3, Ledger, B4: Longitud del papel × 1/2 ±3 mm

1. Entre en el modo de mantenimiento U246, seleccione Booklet y Booklet Pos.
2. Ajuste los valores.
3. Pulse la tecla de Start para confirmar el valor de configuración.

Einstellung der Mittenfaltposition
Überprüfen Sie den Abstand (b) zwischen der Papierkante und der Mittenfaltposition. Falls der Abstand (b) größer als der Bezugswert ist, ist die Position gemäß der nachstehenden Prozedur nachzustellen.
<Bezugswert (b)>
A4, Letter: Papierlänge × 1/2 ±2 mm
A3, Ledger, B4: Papierlänge × 1/2 ±3 mm

1. Schalten Sie in den Wartungsmodus U246, wählen Sie Booklet und Booklet Pos.
2. Die Werte einstellen.
3. Den Einstellwert durch Drücken der Start-Taste bestätigen.

Regolazione della posizione centrale di piegatura
Controllare la distanza (b) dal bordo della carta alla posizione centrale di piegatura. Se la distanza (b) è superiore al valore di riferimento, seguire la procedura riportata sotto per regolare la posizione.
<Valore di riferimento (b)>
A4, Letter: Lunghezza carta × 1/2 ±2 mm
A3, Ledger, B4: Lunghezza carta × 1/2 ±3 mm

1. Impostare la modalità manutenzione U246, selezionare Booklet e Booklet Pos.
2. Regolare i valori.
3. Premere il tasto di Start per confermare il valore dell'impostazione.

中缝折叠位置调整
检查从纸张头部到折叠位置的距离 (b)。如果距离 (b) 超出标准值范围，按照下列步骤调节折叠位置。
＜标准值 (b) ＞
A4,Letter: 纸张长度 ×1/2 ± 2mm
A3,Ledger,B4: 纸张长度 ×1/2 ± 3mm

1. 设置维护模式 U246，选择 Booklet、Booklet Pos。
2. 调整设定值。
3. 按 Start 键，以确定设定值。

접기 위치조정
용지 끝에서 접기 위치까지의 거리 (b) 를 확인합니다 . 거리 (b) 가 기준치 외의 경우에는 다음 순서로 조정을 합니다 .
＜기준치 (b) ＞
A4,Letter: 용지길이 ×1/2 ± 2mm
A3,Ledger,B4: 용지길이 ×1/2 ± 3mm

1. 메인터넌스 모드 U246 을 세트하고 Booklet, Booklet Pos 를 선택합니다 .
2. 설정치를 조정합니다 .
3. 시작키를 누르고 설정치를 확인합니다 .

中折り位置調整
用紙端から中折り位置までの距離 (b) を確認する。距離 (b) が基準値外の場合、次の手順で調整を行う。
＜基準値 (b) ＞
A4,Letter: 用紙長 ×1/2 ± 2mm
A3,Ledger,B4: 用紙長 ×1/2 ± 3mm

1. メンテナンスモード U246 をセットし、Booklet、Booklet Pos を選択する。
2. 設定値を調整する。
3. スタートキーを押し、設定値を確定する。

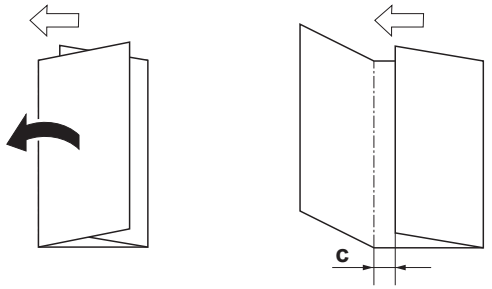

Adjustment of tri-folding position
Check the distance (c) from the edge of the paper to the second folding position. If the distance (c) is over the reference value, follow the procedure below to adjust the position.
<Reference value (c)> 7.0 ±2 mm

1. Set maintenance mode U246, select Booklet and Three Fold.
2. Adjust the values.
3. Press the Start key to confirm the setting value.

Réglage de la position de triple pliage
Vérifier la distance (c) entre le bord de la feuille de papier et la position du deuxième pliage. Si cette distance (c) est supérieure à la valeur de référence, régler la position en procédant de la manière suivante.
<Valeur de référence (c)> 7,0 ±2 mm

1. Passer en mode maintenance U246, sélectionner Booklet et Three Fold.
2. Régler les valeurs.
3. Appuyer sur la touche de Start pour confirmer la valeur de réglage.

Ajuste de la posición de plegado tríptico
Compruebe la distancia (c) desde el borde del papel a la segunda posición de plegado. Si dicha distancia (c) supera el valor de referencia, realice el siguiente procedimiento para ajustar la posición.
<Valor de referencia (c)> 7,0 ±2 mm

1. Entre en el modo de mantenimiento U246, seleccione Booklet y Three Fold.
2. Ajuste los valores.
3. Pulse la tecla de Start para confirmar el valor de configuración.

Einstellung der Dreilagenfaltposition
Überprüfen Sie den Abstand (c) zwischen der Papierkante und der zweiten Faltposition. Falls der Abstand (c) größer als der Bezugswert ist, ist die Position gemäß der nachstehenden Prozedur nachzustellen.
<Bezugswert (c)> 7,0 ±2 mm

1. Schalten Sie in den Wartungsmodus U246, wählen Sie Booklet und Three Fold.
2. Die Werte einstellen.
3. Den Einstellwert durch Drücken der Start-Taste bestätigen.

Regolazione della posizione di piegatura tripla
Controllare la distanza (c) dal bordo della carta alla posizione della seconda piegatura. Se la distanza (c) è superiore al valore di riferimento, seguire la procedura riportata sotto per regolare la posizione.
<Valore di riferimento (c)> 7,0 ±2 mm

1. Impostare la modalità manutenzione U246, selezionare Booklet e Three Fold.
2. Regolare i valori.
3. Premere il tasto di Start per confermare il valore dell'impostazione.

三折位置调整
检查从纸张头部到第 2 个折叠位置的距离 (c)。如果距离 (c) 超出标准值范围，按照下列步骤调节折叠位置。
＜标准 (c) ＞ 7.0±2mm

1. 设置维护模式 U246，选择 Booklet、Three Fold。
2. 调整设定值。
3. 按 Start 键，以确定设定值。

두번 접기 위치 조정
용지끝과 두번째 접히는 위치까지의 거리 (c) 를 확인합니다 . 거리 (c) 가 기준치 외의 경우에는 다음 순서로 조정을 합니다 .
＜기준치 (c) ＞ 7.0±2mm

1. 메인터넌스 모드 U246 을 세트하고 Booklet, Three Fold 를 선택합니다 .
2. 설정치를 조정합니다 .
3. 시작키를 누르고 설정치를 확인합니다 .

三折り位置調整
用紙端と二つ目の折り位置までの距離 (c) を確認する。距離 (c) が基準値外の場合、次の手順で調整を行う。
＜基準値 (c) ＞ 7.0±2mm

1. メンテナンスモード U246 をセットし、Booklet、Three Fold を選択する。
2. 設定値を調整する。
3. スタートキーを押し、設定値を確定する。

NOTICE
This accessory is for use only with the following Applicant's Listed Machine.
Machine: DF-790,DF-7110

AVIS
Cet accessoire est utilisable uniquement avec le copieur figurant dans la liste du demandeur suivant.
Modèle: DF-790,DF-7110

AVISO
Este accesorio es sólo para usar en las siguientes fotocopiadoras de la lista de solicitantes.
Modelo: DF-790,DF-7110

HINWEIS
Dieses Zubehör ist nur für den Einsatz mit der folgenden Antragstellerlisten-Kopiermaschine vorgesehen.
Modell: DF-790,DF-7110

NOTIFICA
Questo accessorio deve essere usato solo con le seguenti fotocopiatrici nella lista dell'applicante.
Modello: DF-790,DF-7110

注意
本产品适用于以下机型。
机型： DF-790,DF-7110

주의
본 제품은 이하의 기종에 적용됩니다 .
기종: DF-790,DF-7110

注意
本製品は、以下の機種に適用します。
機種: DF-790,DF-7110



2016. 3
303ND56710-02

BF-9100

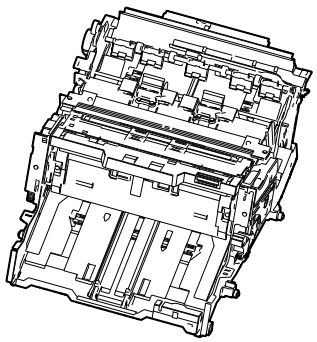

INSTALLATION GUIDE

GUIDE D'INSTALLATION

GUÍA DE INSTALACION

INSTALLATIONSANLEITUNG

GUIDA ALL'INSTALLAZIONE

安装手册

설치안내서

設置手順書

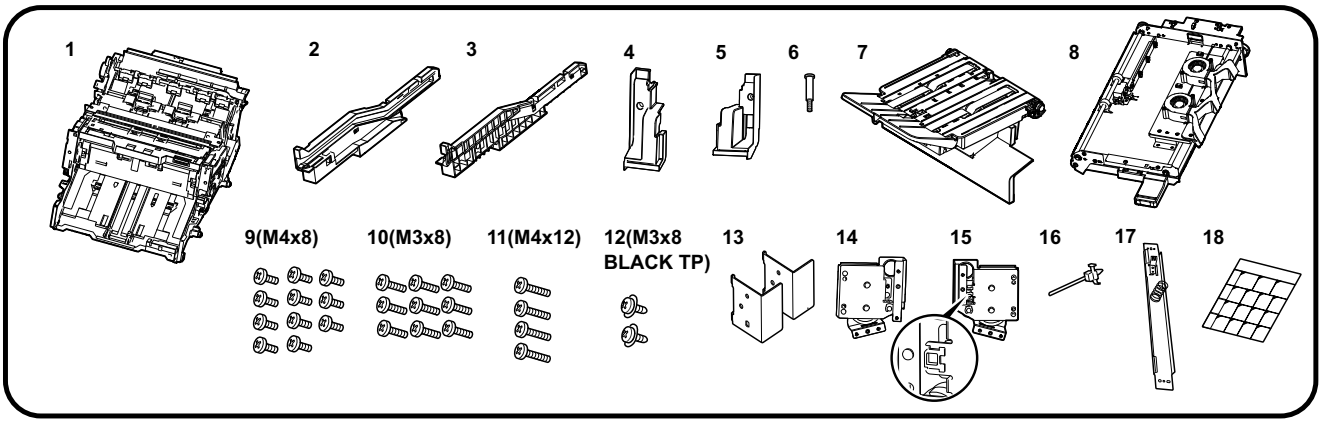

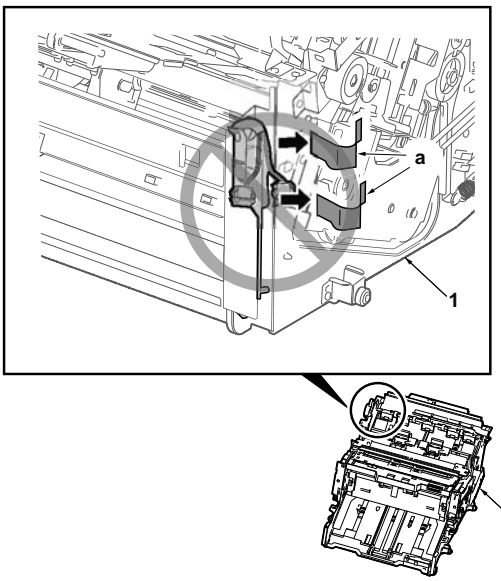

(EN) Be sure to remove any tape and/or cushioning materials from the parts supplied, except fixing tape of (a). Remove the fixing tape of (a) in step 21.

(FR) Veillez à retirer les morceaux de bande adhésive et/ou les matériaux de rembourrage des pièces fournies, à l' exception du ruban de fixation de (a). Retirez le ruban de fixation de (a) à l' étape 21.

(ES) Asegúrese de quitar cualquier cinta y/o material protector de las piezas suministradas, excepto la cinta de fijación de (a). Quite la cinta de fijación de (a) en el paso 21.

(DE) Stellen Sie sicher, dass alle Klebebänder und/oder Verpackungsreste von den gelieferten Teilen entfernt wurden, außer dem Fixierband aus (a). Entfernen Sie das Fixierband aus (a) in Schritt 21.

(IT) Rimuovere tutti i nastri adesivi e/o i materiali di protezione dalle parti fornite, ad eccezione del nastro di fissaggio di (a). Rimuovere il nastro di fissaggio di (a) al punto 21.

(ZHCN) 如果随机品上面有固定胶带和缓冲材料时，请一定要取下除了（a）的固定胶带以外的物品。在步骤 21 时剥除固定胶带（a）.

(KO) 고정테이프(a)를 제외하고, 제공된 부품에서 테이프 및 / 또는 완충재를 제거하십시오.
스텝21에서 고정 테이프(a)를 제거합니다.

(JA) 同梱品に固定テープ、緩衝材がついている場合は、(a) の固定テープ以外は必ず取り外すこと。
(a) の固定テープは手順 21 で外すこと。

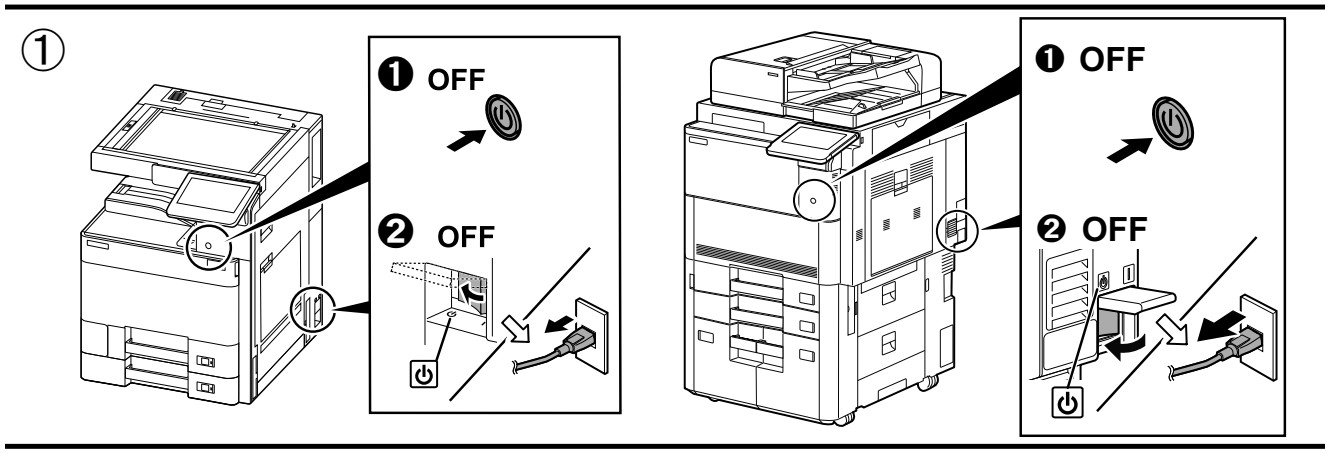

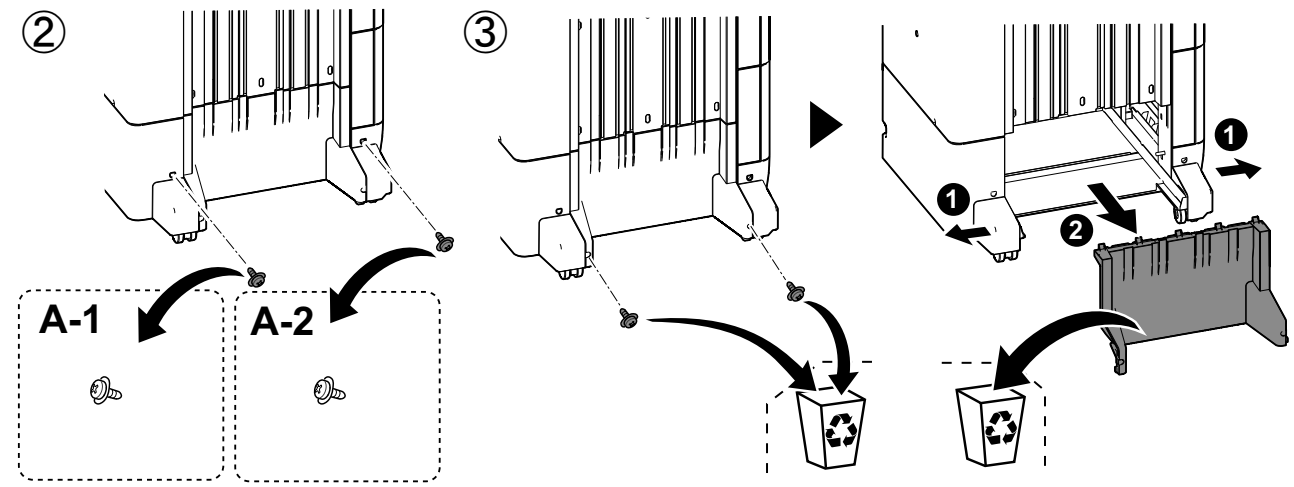

④

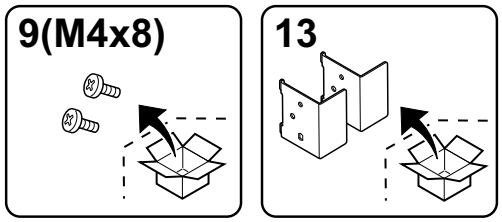
9(M4x8)
13

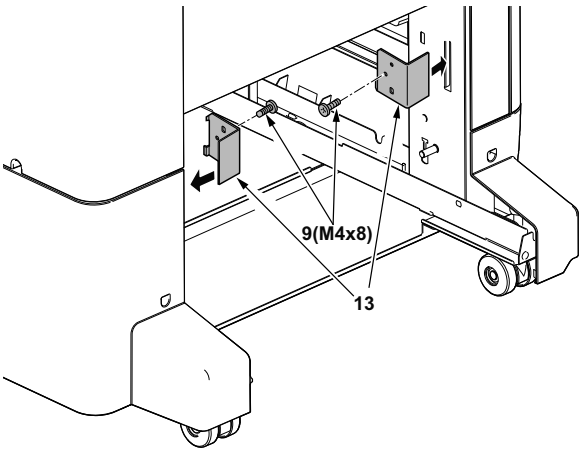
9(M4x8)
13

⑤

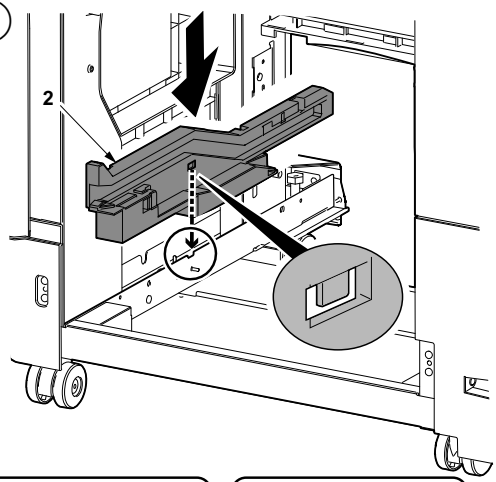
2

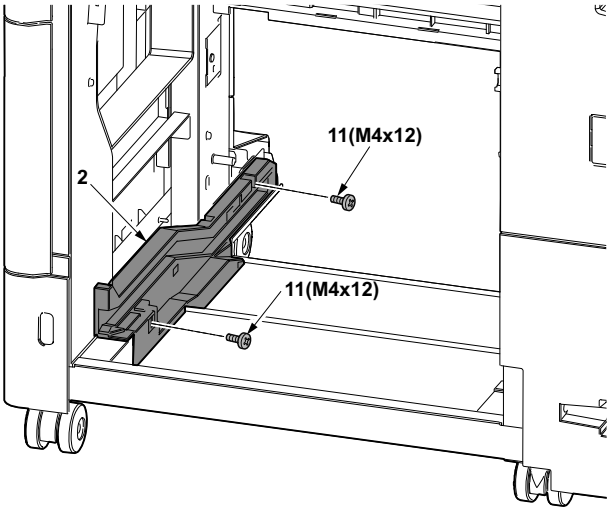
11(M4x12)
2
11(M4x12)

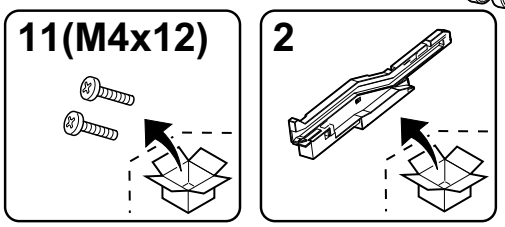
11(M4x12)
2

⑥

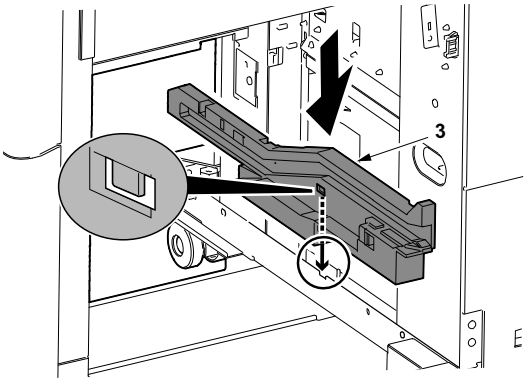
3

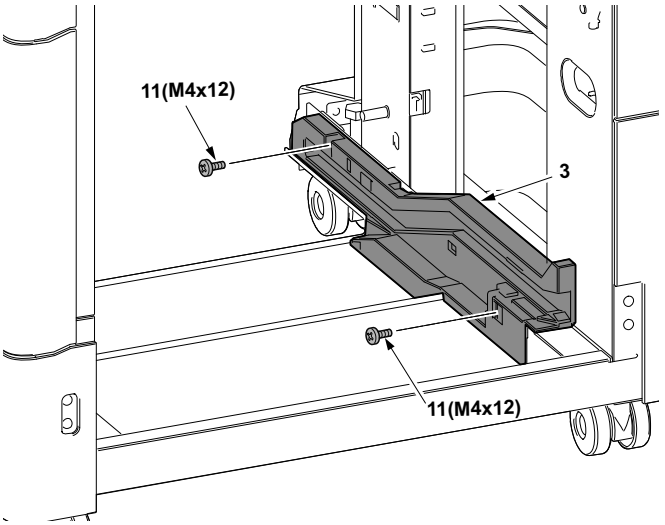
11(M4x12)
3
11(M4x12)

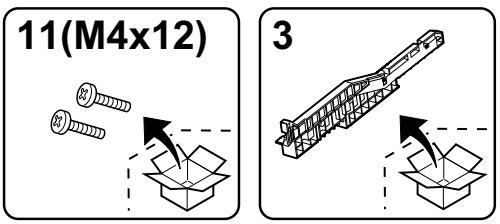
11(M4x12)
3

④

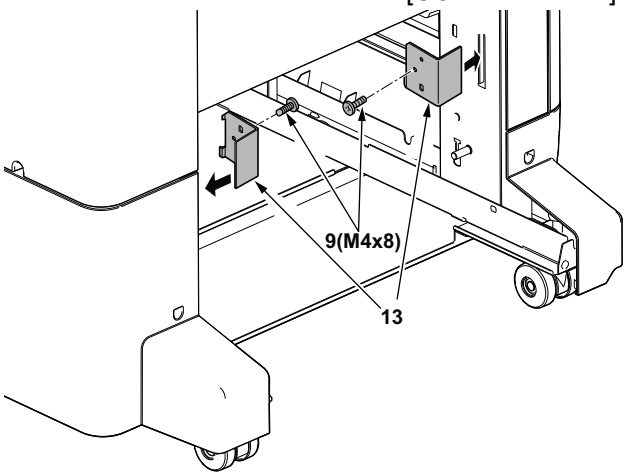
9(M4x8)
13

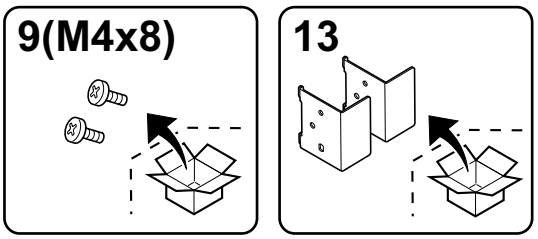
9(M4x8)

13

⑤

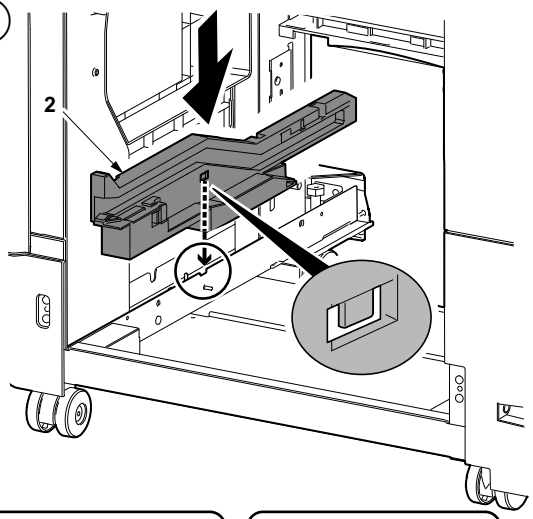
2

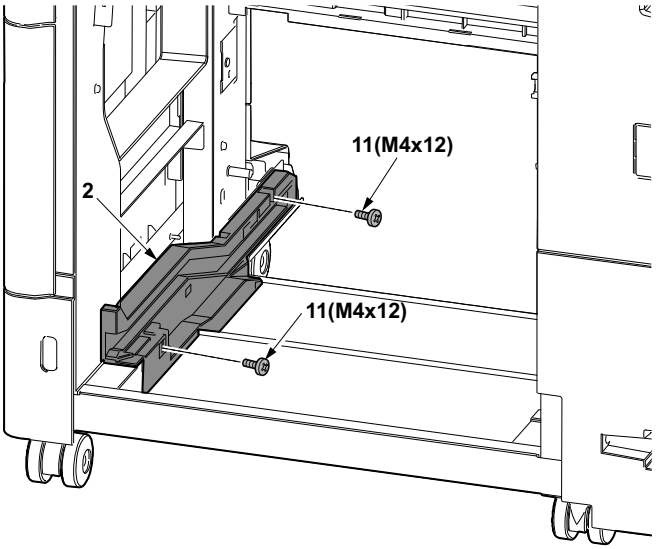
11(M4x12)
2
11(M4x12)

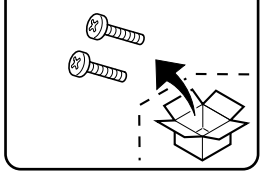
11(M4x12)

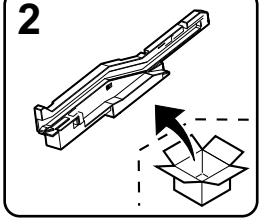
2

⑥

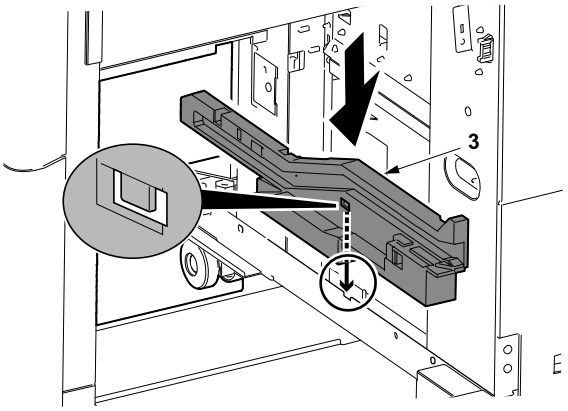
3

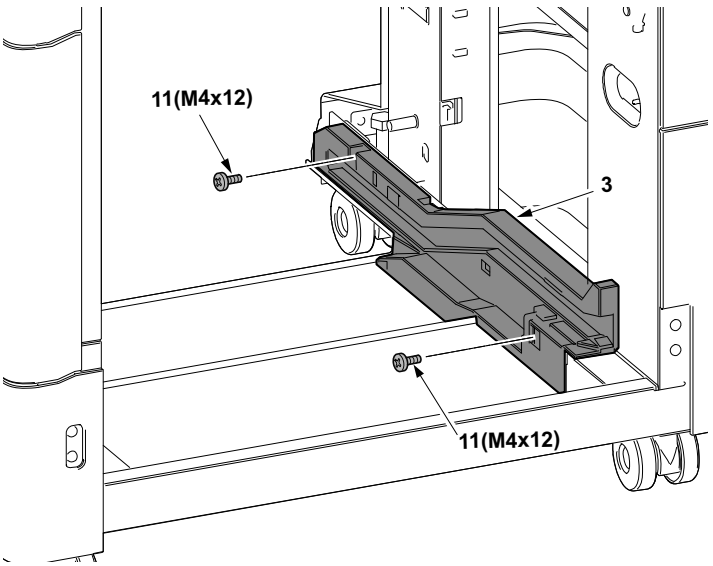
11(M4x12)
3
11(M4x12)

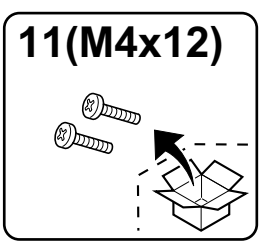
11(M4x12)

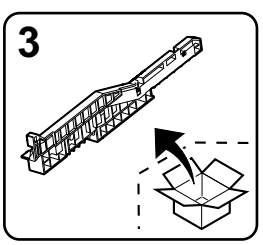
3

⑦

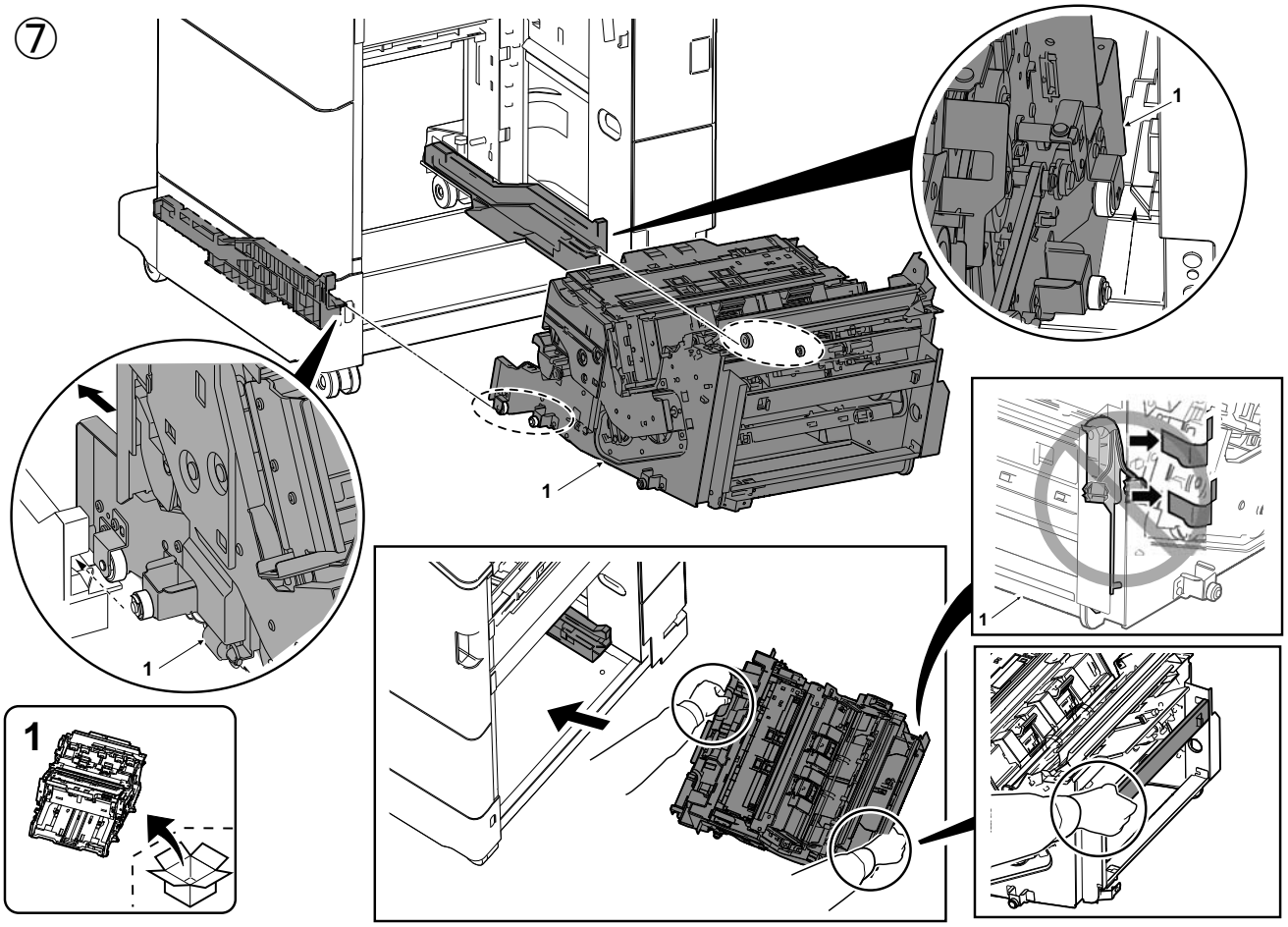

⑧

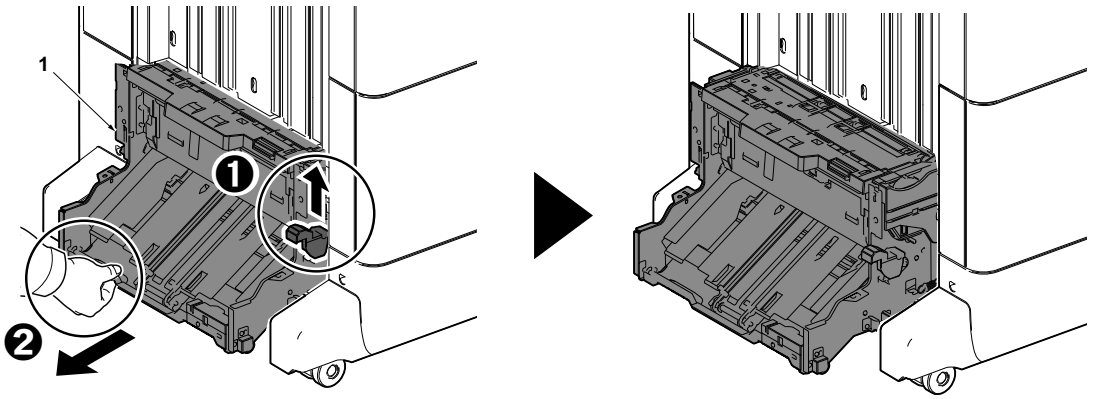

⑨

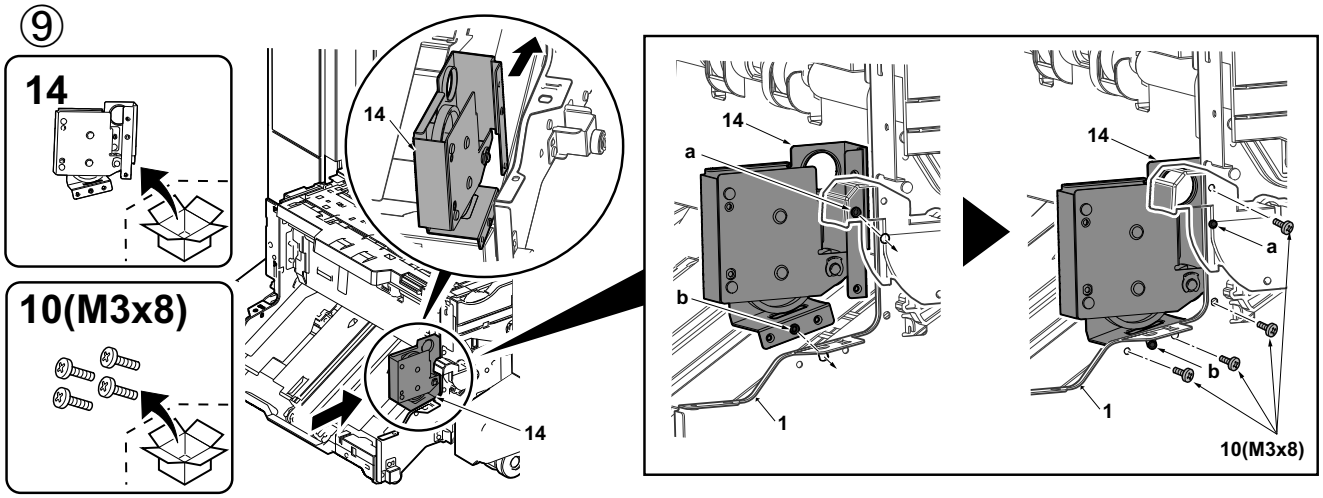

⑩

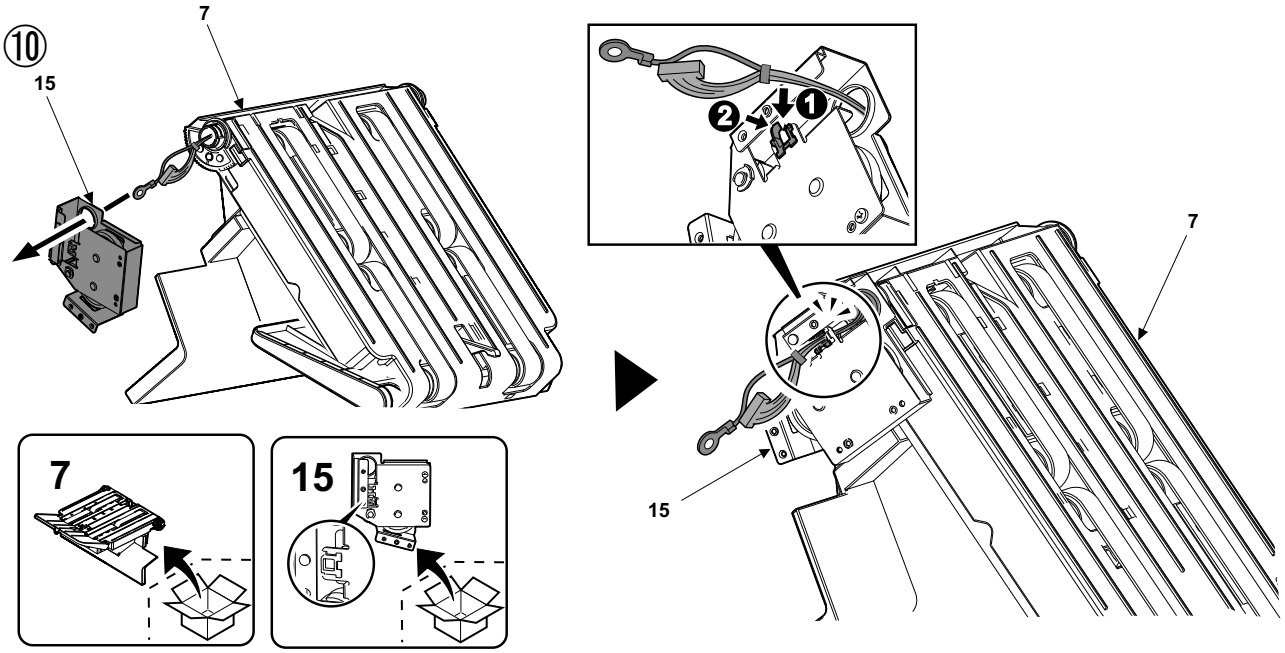

⑪

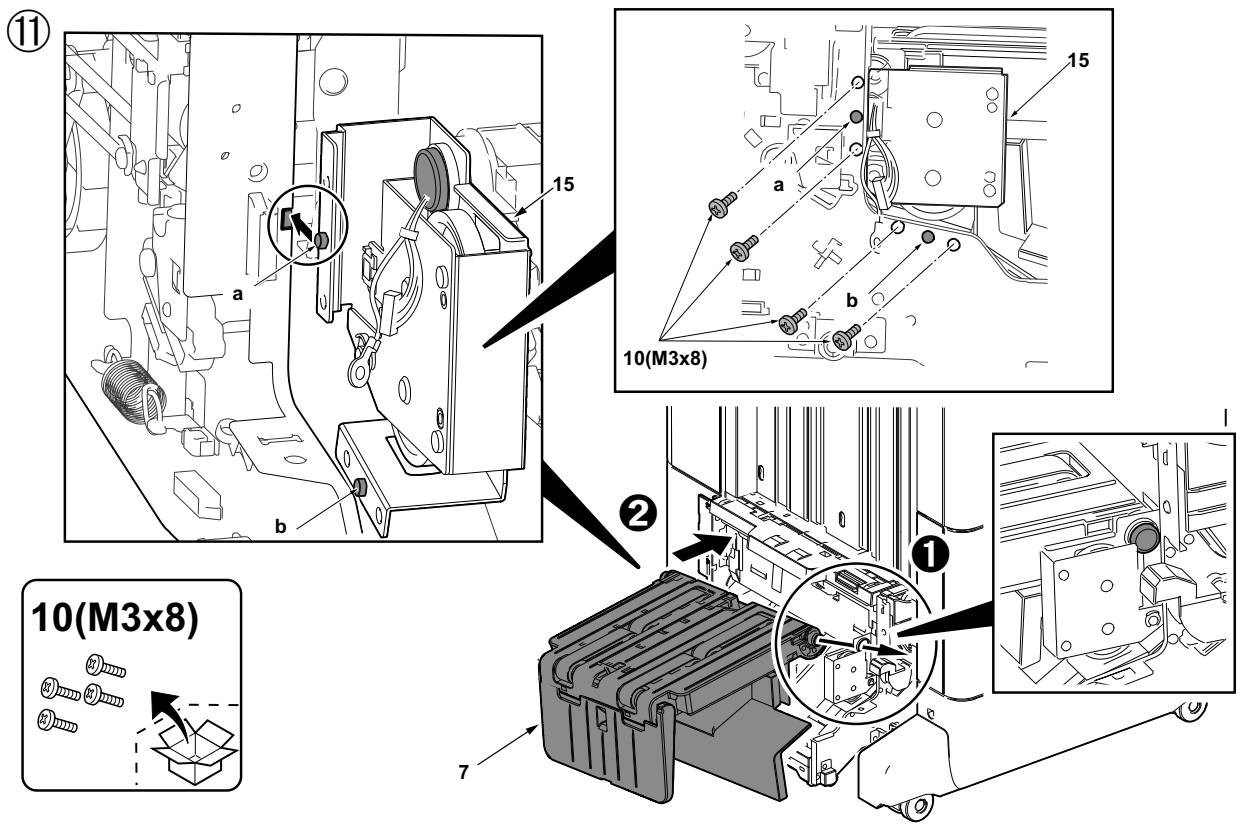

⑫

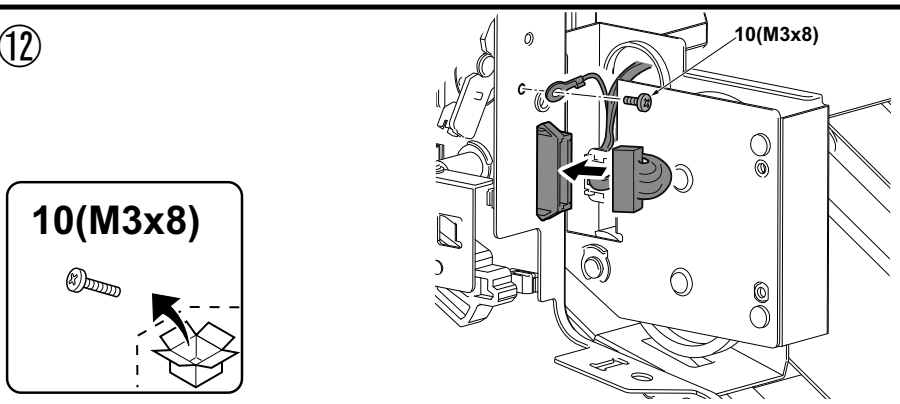

⑬

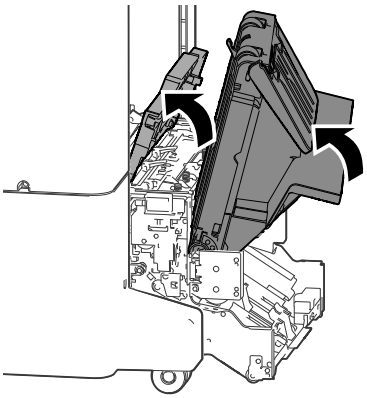

⑭

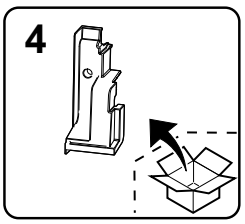

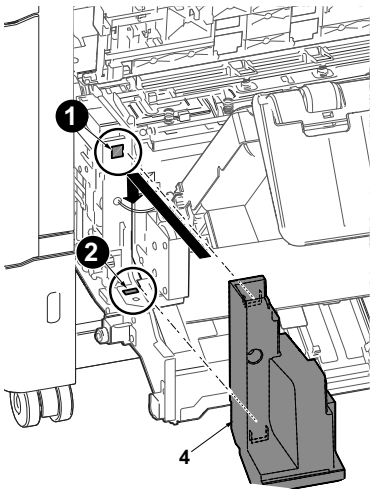

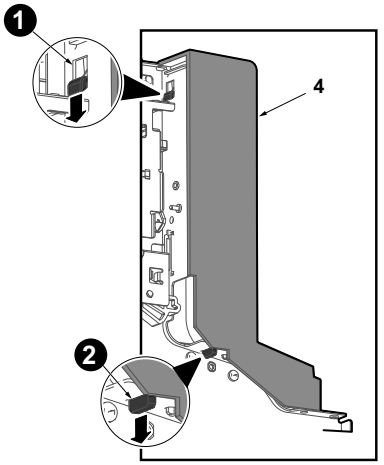

⑮

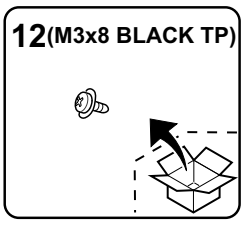

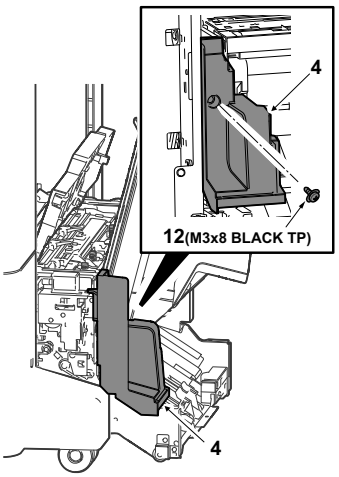

⑯

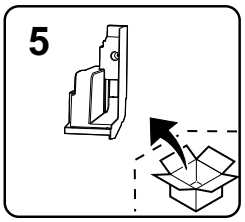

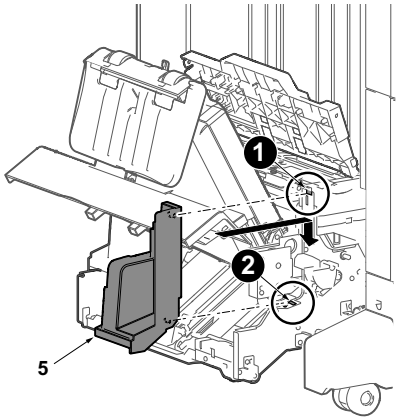

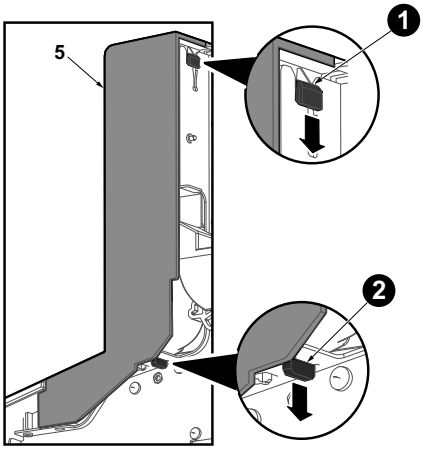

⑰

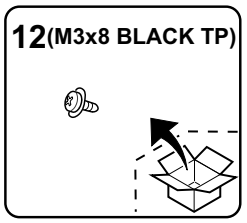

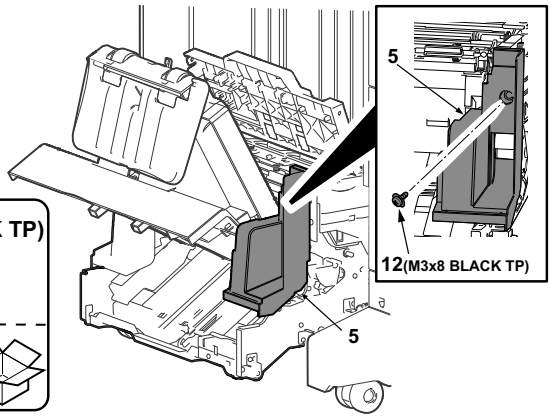

⑱

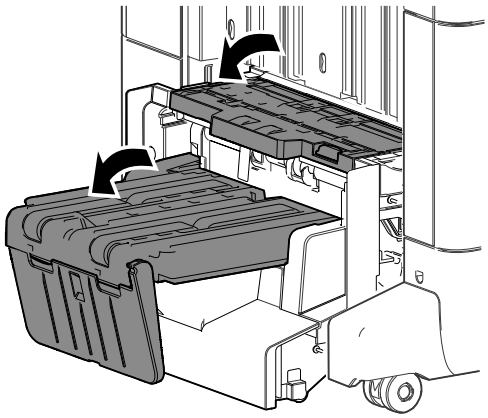

⑲

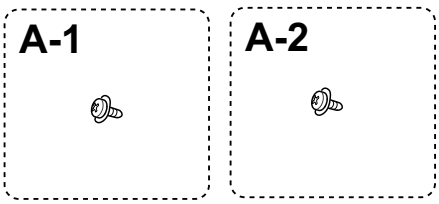

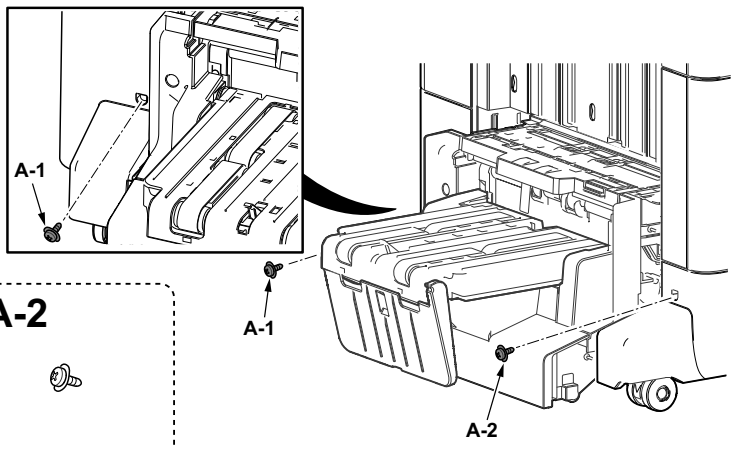

⑳

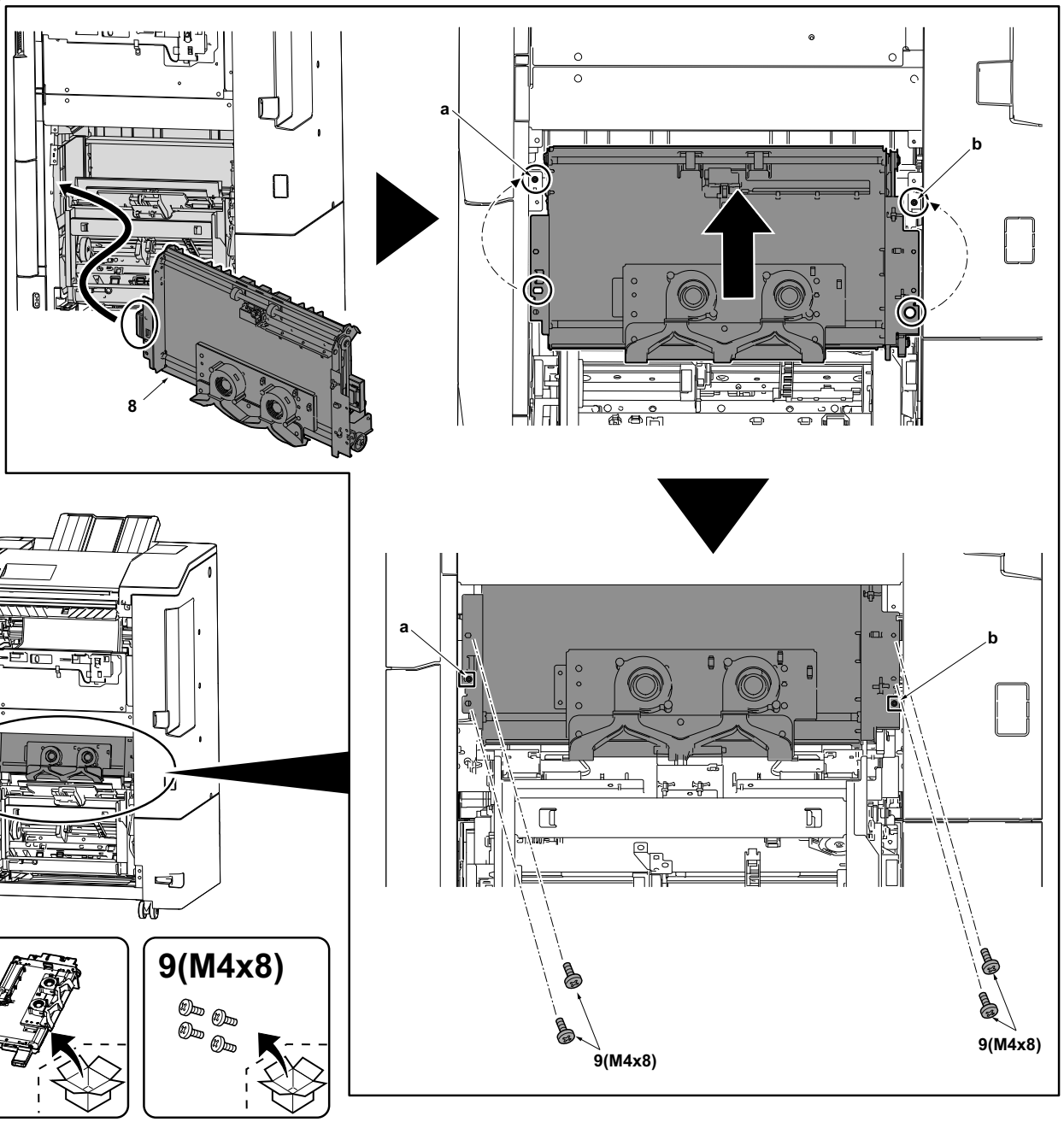

⑳

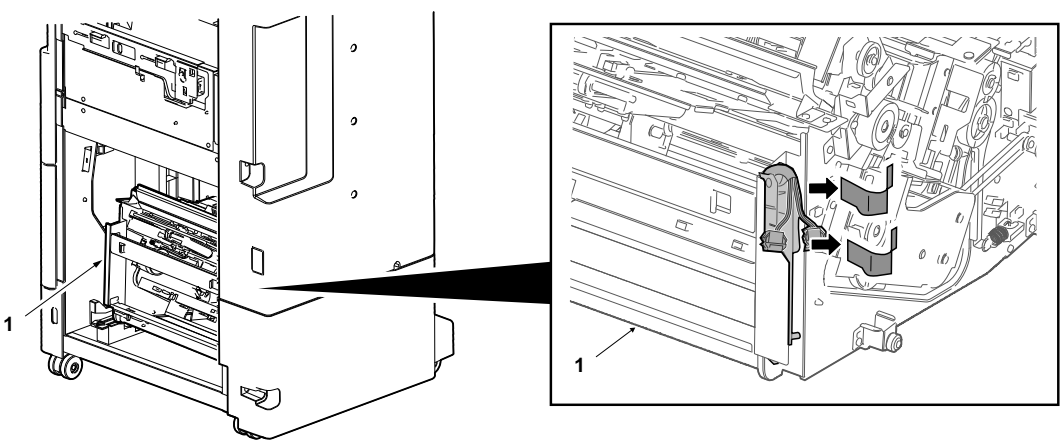

㉒

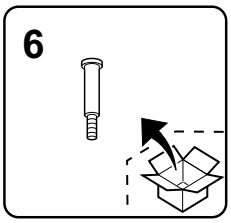

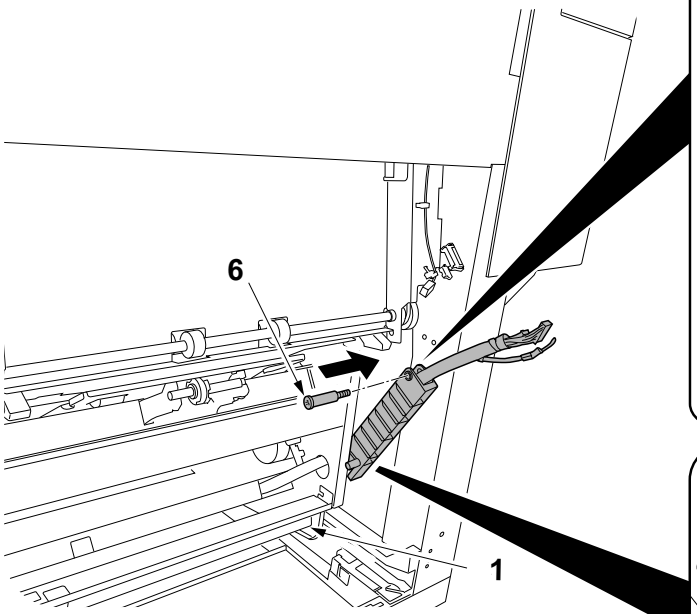

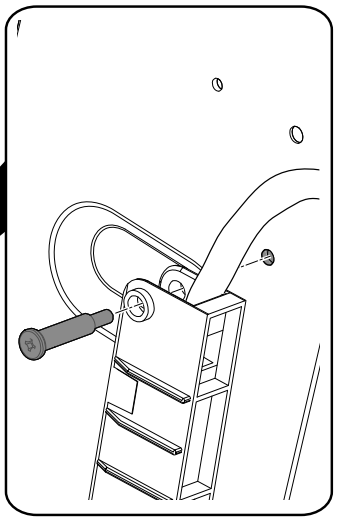

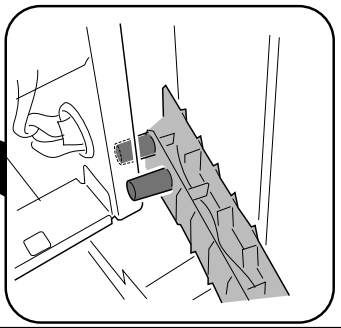

㉓

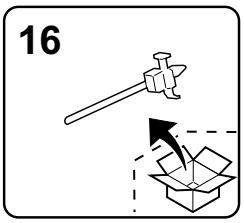

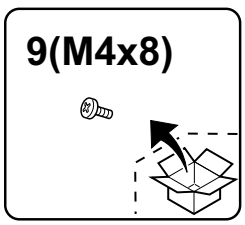

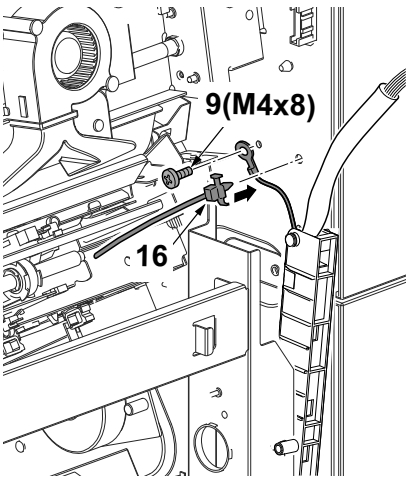

㉔

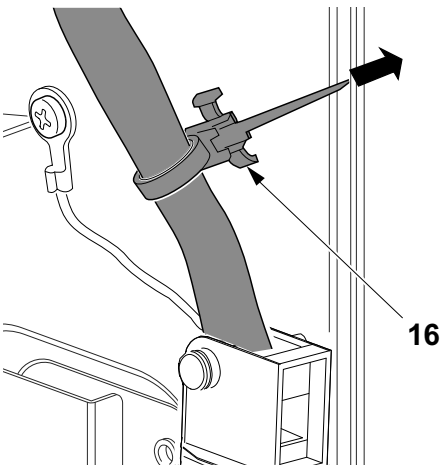

㉕

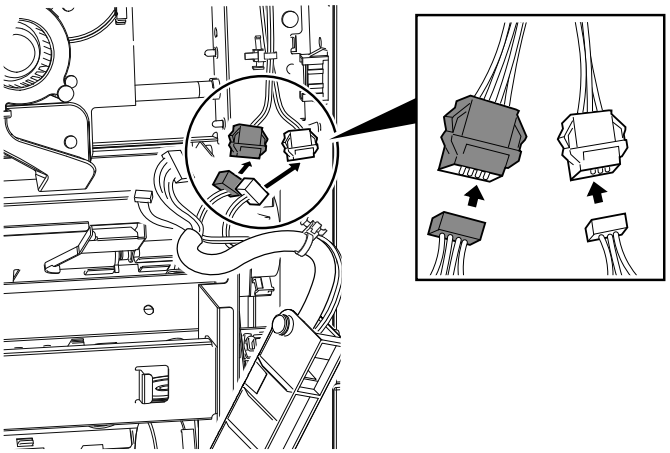

㉖

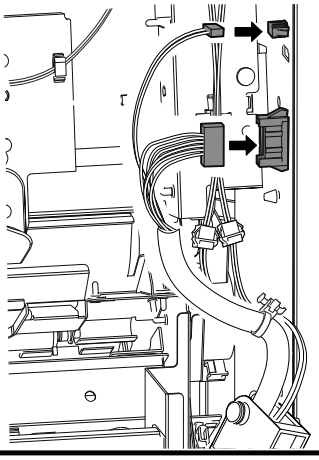

㉗

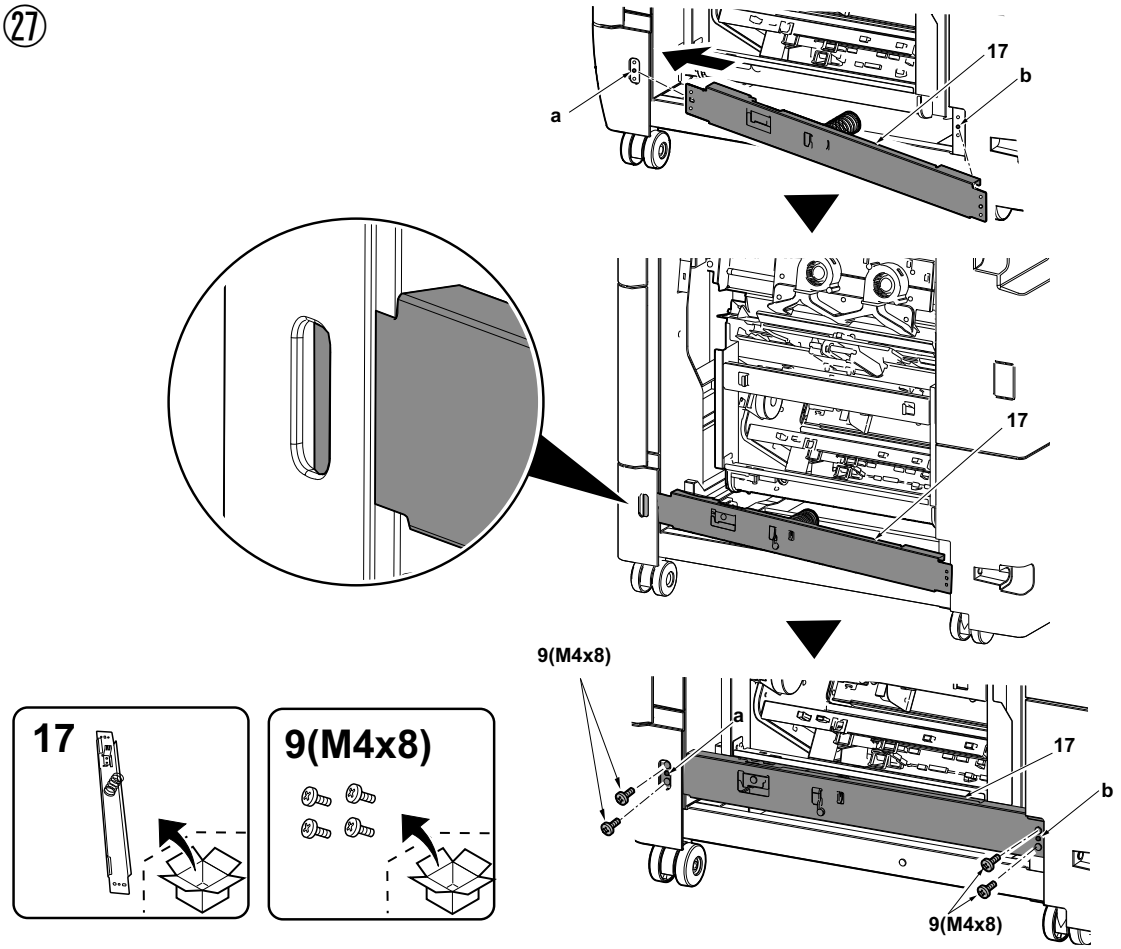

㉘

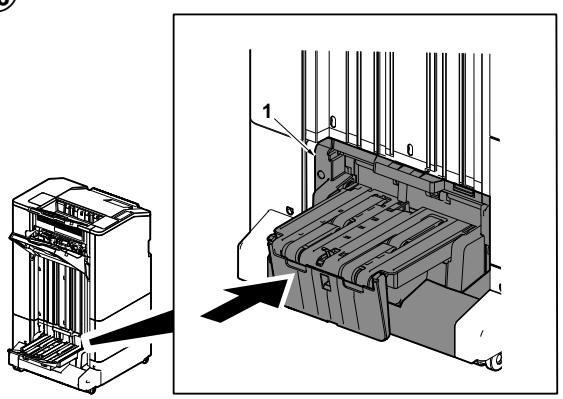

㉙

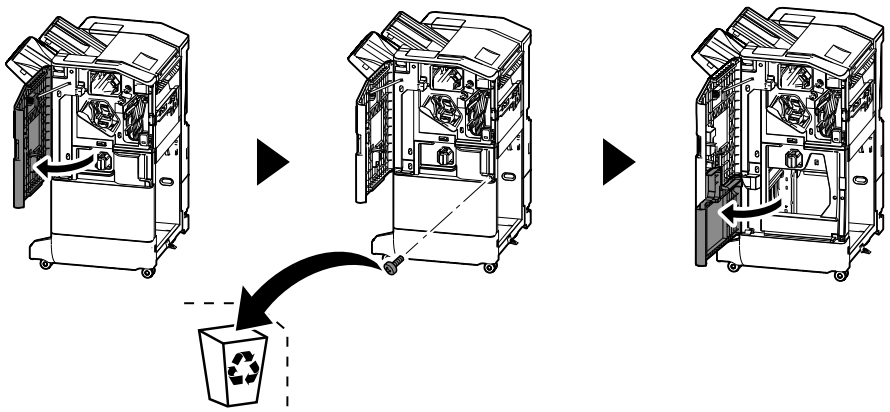

㉚

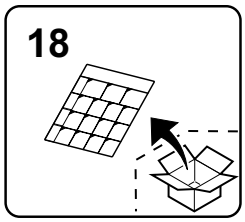

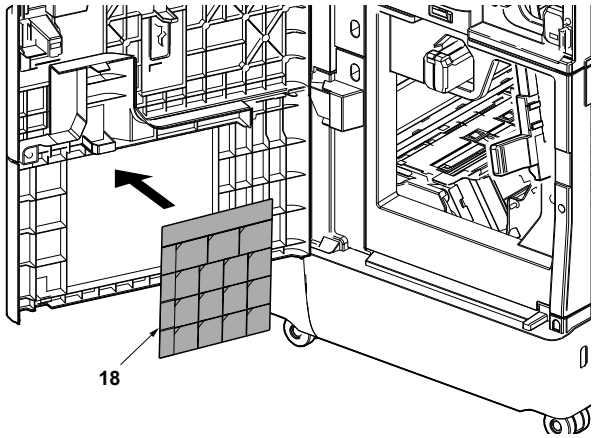

㉛

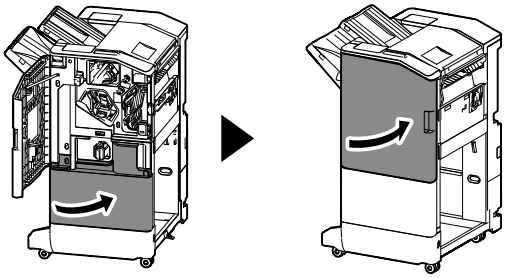

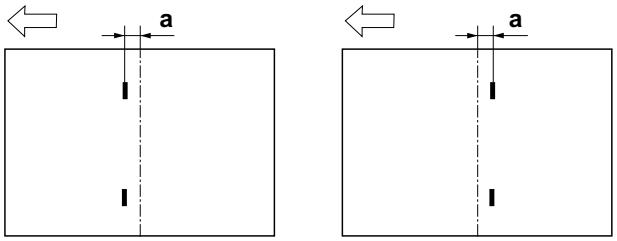

Adjustment of centerfold-stapling position
Check the distance (a) from the stapling position to the center of the paper. If the distance (a) is over the reference value, follow the procedure below to adjust the position.
<Reference value (a)> ±2 mm

1. Set maintenance mode U246, select Booklet and Staple Pos#.
2. Adjust the values.
3. Press the Start key to confirm the setting value.

Réglage de la position d'agrafage des pages centrales dépliables
Vérifier la distance (a) entre la position d'agrafage et le milieu de la feuille de papier. Si cette distance (a) est supérieure à la valeur de référence, régler la position en procédant de la manière suivante.
<Valeur de référence (a)> ±2 mm

1. Passer en mode maintenance U246, sélectionner Booklet et Staple Pos#.
2. Régler les valeurs.
3. Appuyer sur la touche de Start pour confirmer la valeur de réglage.

Ajuste de la posición de grapado de la unidad de plegado
Compruebe la distancia (a) desde la posición de grapado con respecto al centro del papel. Si dicha distancia (a) supera el valor de referencia, realice el siguiente procedimiento para ajustar la posición.
<Valor de referencia (a)> ±2 mm

1. Entre en el modo de mantenimiento U246, seleccione Booklet y Staple Pos#.
2. Ajuste los valores.
3. Pulse la tecla de Start para confirmar el valor de configuración.

Einstellung der Mittenfalt-Heftposition
Überprüfen Sie den Abstand (a) zwischen der Heftposition und der Papiermitte. Falls der Abstand (a) größer als der Bezugswert ist, ist die Position gemäß der nachstehenden Prozedur nachzustellen.
<Bezugswert (a)> ±2 mm

1. Schalten Sie in den Wartungsmodus U246, wählen Sie Booklet und Staple Pos#.
2. Die Werte einstellen.
3. Den Einstellwert durch Drücken der Start-Taste bestätigen.

Regolazione della posizione di cucitura dell'unità di piegatura centrale
Controllare la distanza (a) dalla posizione di spillatura al centro del foglio. Se la distanza (a) è superiore al valore di riferimento, seguire la procedura riportata sotto per regolare la posizione.
<Valore di riferimento (a)> ±2 mm

1. Impostare la modalità manutenzione U246, selezionare Booklet e Staple Pos#.
2. Regolare i valori.
3. Premere il tasto di Start per confermare il valore dell'impostazione.

中缝装订位置调整
检查从装订位置到纸张中心的距离 (a)。如果距离 (a) 超出标准值范围，按照下列步骤调节装订位置。
＜标准值 (a) ＞ ±2mm

1. 设置维护模式 U246，选择 Booklet>Staple Pos#。
2. 调整设定值。
3. 按 Start 键，以确定设定值。

접기 스테이플 위치조정
스테이플 위치에서 용지 중앙까지의 거리離 (a) 를 확인합니다 . 거리 (a) 가 기준치 외의 경우에는 다음 순서로 조정을 합니다 .
＜기준치 (a) ＞ ±2mm

1. 메인터넌스 모드 U246 을 세트하고 Booklet>Staple Pos# 를 선택합니다 .
2. 설정치를 조정합니다 .
3. 시작키를 누르고 설정치를 확인합니다 .

中とじステープル位置調整
ステープル位置から用紙センターまでの距離 (a) を確認する。距離 (a) が基準値外の場合、次の手順で調整を行う。
＜基準値 (a) ＞ ±2mm

1. メンテナンスモード U246 をセットし、Booklet>Staple Pos# を選択する。
2. 設定値を調整する。
3. スタートキーを押し、設定値を確定する。

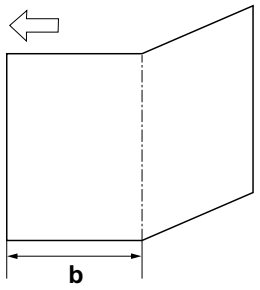

Adjustment of center folding position
Check the distance (b) from the edge of the paper to the center folding position. If the distance (b) is over the reference value, follow the procedure below to adjust the position.
<Reference value (b)>
A4, Letter: Length of paper × 1/2 ±2 mm
A3, Ledger, B4: Length of paper × 1/2 ±3 mm

1. Set maintenance mode U246, select Booklet and Booklet Pos#.
2. Adjust the values.
3. Press the Start key to confirm the setting value.

Réglage de la position de pliage central
Vérifier la distance (b) entre le bord de la feuille de papier et la position de pliage central. Si cette distance (b) est supérieure à la valeur de référence, régler la position en procédant de la manière suivante.
<Valeur de référence (b)>
A4, Letter : Longueur de la feuille × 1/2 ±2 mm
A3, Ledger, B4: Longueur de la feuille × 1/2 ±3 mm

1. Passer en mode maintenance U246, sélectionner Booklet et Booklet Pos#.
2. Régler les valeurs.
3. Appuyer sur la touche de Start pour confirmer la valeur de réglage.

Ajuste de la posición de plegado
Compruebe la distancia (b) desde el borde del papel a la posición de plegado. Si dicha distancia (b) supera el valor de referencia, realice el siguiente procedimiento para ajustar la posición.
<Valor de referencia (b)>
A4, Letter: Longitud del papel × 1/2 ±2 mm
A3, Ledger, B4: Longitud del papel × 1/2 ±3 mm

1. Entre en el modo de mantenimiento U246, seleccione Booklet y Booklet Pos#.
2. Ajuste los valores.
3. Pulse la tecla de Start para confirmar el valor de configuración.

Einstellung der Mittenfaltposition
Überprüfen Sie den Abstand (b) zwischen der Papierkante und der Mittenfaltposition. Falls der Abstand (b) größer als der Bezugswert ist, ist die Position gemäß der nachstehenden Prozedur nachzustellen.
<Bezugswert (b)>
A4, Letter: Papierlänge × 1/2 ±2 mm
A3, Ledger, B4: Papierlänge × 1/2 ±3 mm

1. Schalten Sie in den Wartungsmodus U246, wählen Sie Booklet und Booklet Pos#.
2. Die Werte einstellen.
3. Den Einstellwert durch Drücken der Start-Taste bestätigen.

Regolazione della posizione centrale di piegatura
Controllare la distanza (b) dal bordo della carta alla posizione centrale di piegatura. Se la distanza (b) è superiore al valore di riferimento, seguire la procedura riportata sotto per regolare la posizione.
<Valore di riferimento (b)>
A4, Letter: Lunghezza carta × 1/2 ±2 mm
A3, Ledger, B4: Lunghezza carta × 1/2 ±3 mm

1. Impostare la modalità manutenzione U246, selezionare Booklet e Booklet Pos#.
2. Regolare i valori.
3. Premere il tasto di Start per confermare il valore dell'impostazione.

中缝折叠位置调整
检查从纸张头部到折叠位置的距离 (b)。如果距离 (b) 超出标准值范围，按照下列步骤调节折叠位置。
＜标准值 (b) ＞
A4,Letter: 纸张长度 ×1/2 ± 2mm
A3,Ledger,B4: 纸张长度 ×1/2 ± 3mm

1. 设置维护模式 U246，选择 Booklet>Booklet Pos#。
2. 调整设定值。
3. 按 Start 键，以确定设定值。

접기 위치조정
용지 끝에서 접기 위치까지의 거리 (b) 를 확인합니다 . 거리 (b) 가 기준치 외의 경우에는 다음 순서로 조정을 합니다 .
＜기준치 (b) ＞
A4,Letter: 용지길이 ×1/2 ± 2mm
A3,Ledger,B4: 용지길이 ×1/2 ± 3mm

1. 메인터넌스 모드 U246 을 세트하고 Booklet> Booklet Pos# 를 선택합니다 .
2. 설정치를 조정합니다 .
3. 시작키를 누르고 설정치를 확인합니다 .

中折り位置調整
用紙端から中折り位置までの距離 (b) を確認する。距離 (b) が基準値外の場合、次の手順で調整を行う。
＜基準値 (b) ＞
A4,Letter: 用紙長 ×1/2 ± 2mm
A3,Ledger,B4: 用紙長 ×1/2 ± 3mm

1. メンテナンスモード U246 をセットし、Booklet>Booklet Pos# を選択する。
2. 設定値を調整する。
3. スタートキーを押し、設定値を確定する。

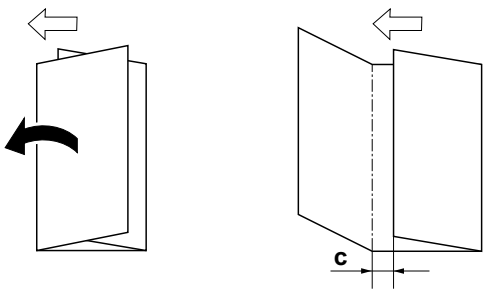

Adjustment of tri-folding position
Check the distance (c) from the edge of the paper to the second folding position. If the distance (c) is over the reference value, follow the procedure below to adjust the position.
<Reference value (c)> 7.0 ±2 mm

1. Set maintenance mode U246, select Booklet and Three Fold.
2. Adjust the values.
3. Press the Start key to confirm the setting value.

Réglage de la position de triple pliage
Vérifier la distance (c) entre le bord de la feuille de papier et la position du deuxième pliage. Si cette distance (c) est supérieure à la valeur de référence, régler la position en procédant de la manière suivante.
<Valeur de référence (c)> 7,0 ±2 mm

1. Passer en mode maintenance U246, sélectionner Booklet et Three Fold.
2. Régler les valeurs.
3. Appuyer sur la touche de Start pour confirmer la valeur de réglage.

Ajuste de la posición de plegado tríptico
Compruebe la distancia (c) desde el borde del papel a la segunda posición de plegado. Si dicha distancia (c) supera el valor de referencia, realice el siguiente procedimiento para ajustar la posición.
<Valor de referencia (c)> 7,0 ±2 mm

1. Entre en el modo de mantenimiento U246, seleccione Booklet y Three Fold.
2. Ajuste los valores.
3. Pulse la tecla de Start para confirmar el valor de configuración.

Einstellung der Dreilagenfaltposition
Überprüfen Sie den Abstand (c) zwischen der Papierkante und der zweiten Faltposition. Falls der Abstand (c) größer als der Bezugswert ist, ist die Position gemäß der nachstehenden Prozedur nachzustellen.
<Bezugswert (c)> 7,0 ±2 mm

1. Schalten Sie in den Wartungsmodus U246, wählen Sie Booklet und Three Fold.
2. Die Werte einstellen.
3. Den Einstellwert durch Drücken der Start-Taste bestätigen.

Regolazione della posizione di piegatura tripla
Controllare la distanza (c) dal bordo della carta alla posizione della seconda piegatura. Se la distanza (c) è superiore al valore di riferimento, seguire la procedura riportata sotto per regolare la posizione.
<Valore di riferimento (c)> 7,0 ±2 mm

1. Impostare la modalità manutenzione U246, selezionare Booklet e Three Fold.
2. Regolare i valori.
3. Premere il tasto di Start per confermare il valore dell'impostazione.

三折位置调整
检查从纸张头部到第 2 个折叠位置的距离 (c)。如果距离 (c) 超出标准值范围，按照下列步骤调节折叠位置。
＜标准 (c) ＞ 7.0±2mm

1. 设置维护模式 U246，选择 Booklet>Three Fold。
2. 调整设定值。
3. 按 Start 键，以确定设定值。

두번 접기 위치 조정
용지끝과 두번째 접히는 위치까지의 거리 (c) 를 확인합니다 . 거리 (c) 가 기준치 외의 경우에는 다음 순서로 조정을 합니다 .
＜기준치 (c) ＞ 7.0±2mm

1. 메인터넌스 모드 U246 을 세트하고 Booklet>Three Fold 를 선택합니다 .
2. 설정치를 조정합니다 .
3. 시작키를 누르고 설정치를 확인합니다 .

三折り位置調整
用紙端と二つ目の折り位置までの距離 (c) を確認する。距離 (c) が基準値外の場合、次の手順で調整を行う。
＜基準値 (c) ＞ 7.0±2mm

1. メンテナンスモード U246 をセットし、Booklet>Three Fold を選択する。
2. 設定値を調整する。
3. スタートキーを押し、設定値を確定する。



2019. 4
303SP5671002

DF-7100

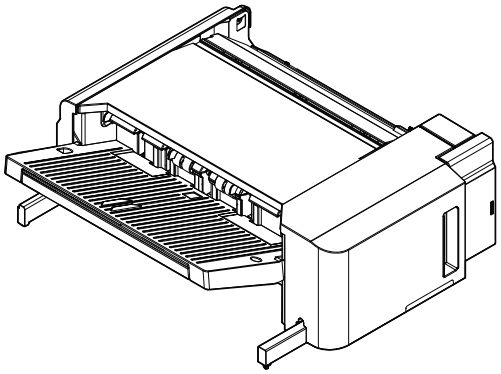

INSTALLATION GUIDE

GUIDE D'INSTALLATION

GUÍA DE INSTALACION

INSTALLATIONSANLEITUNG

GUIDA ALL'INSTALLAZIONE

安装手册

설치안내서

設置手順書

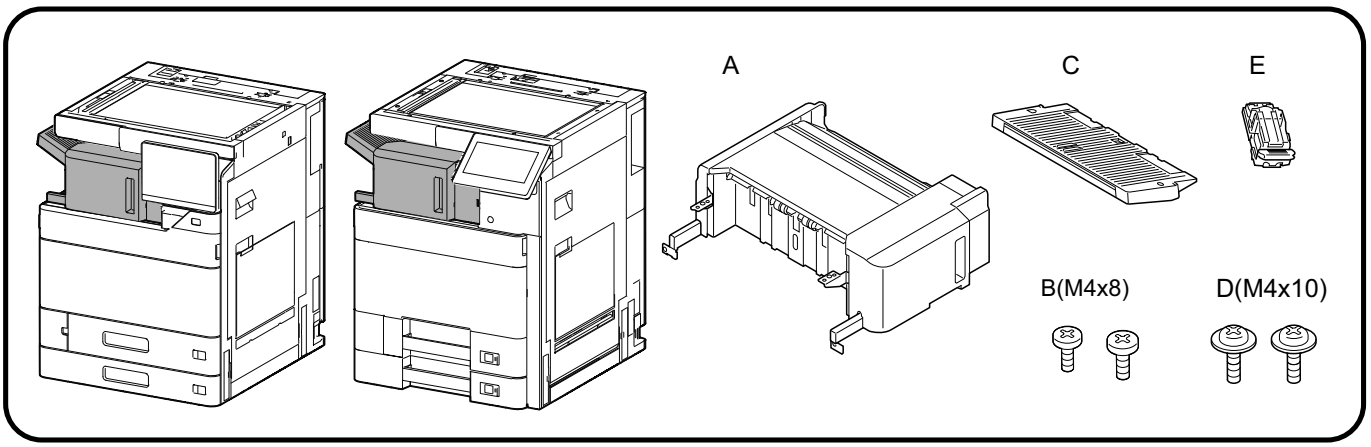

①

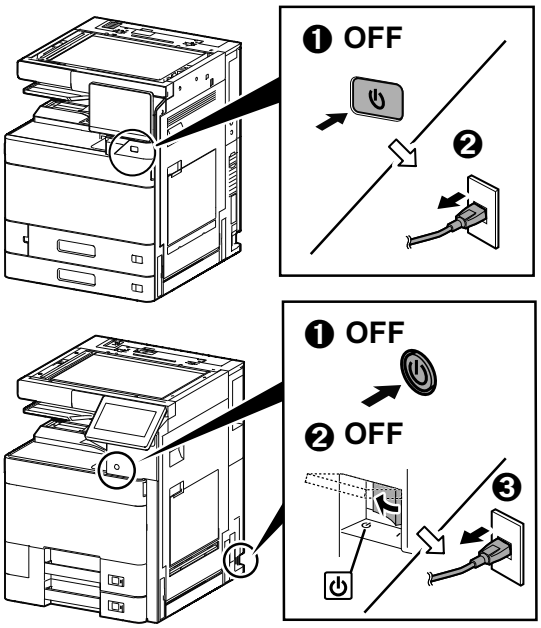

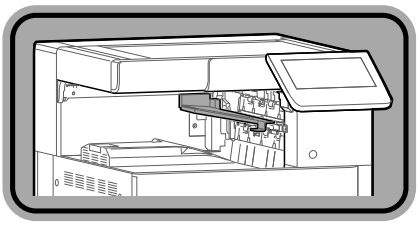

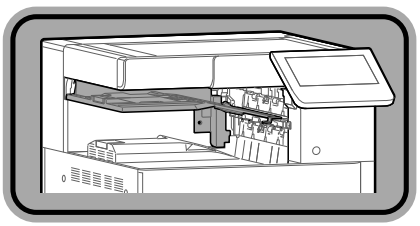

②–1

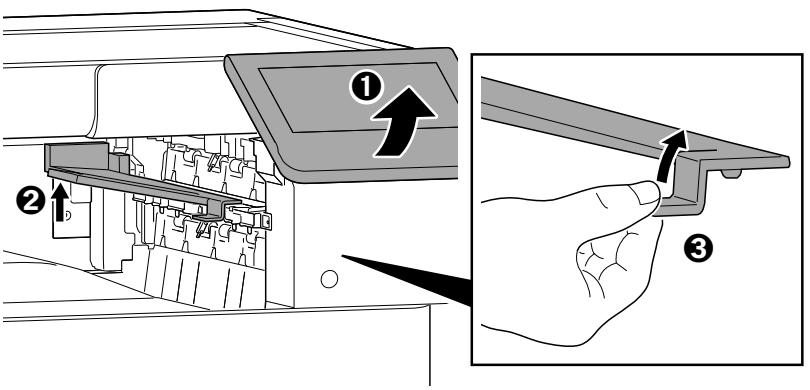

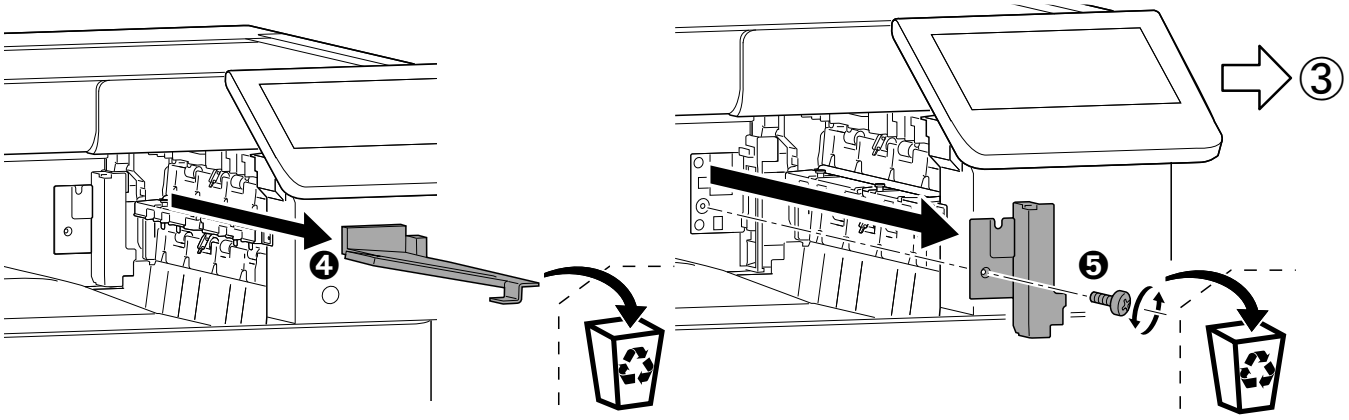

②-2

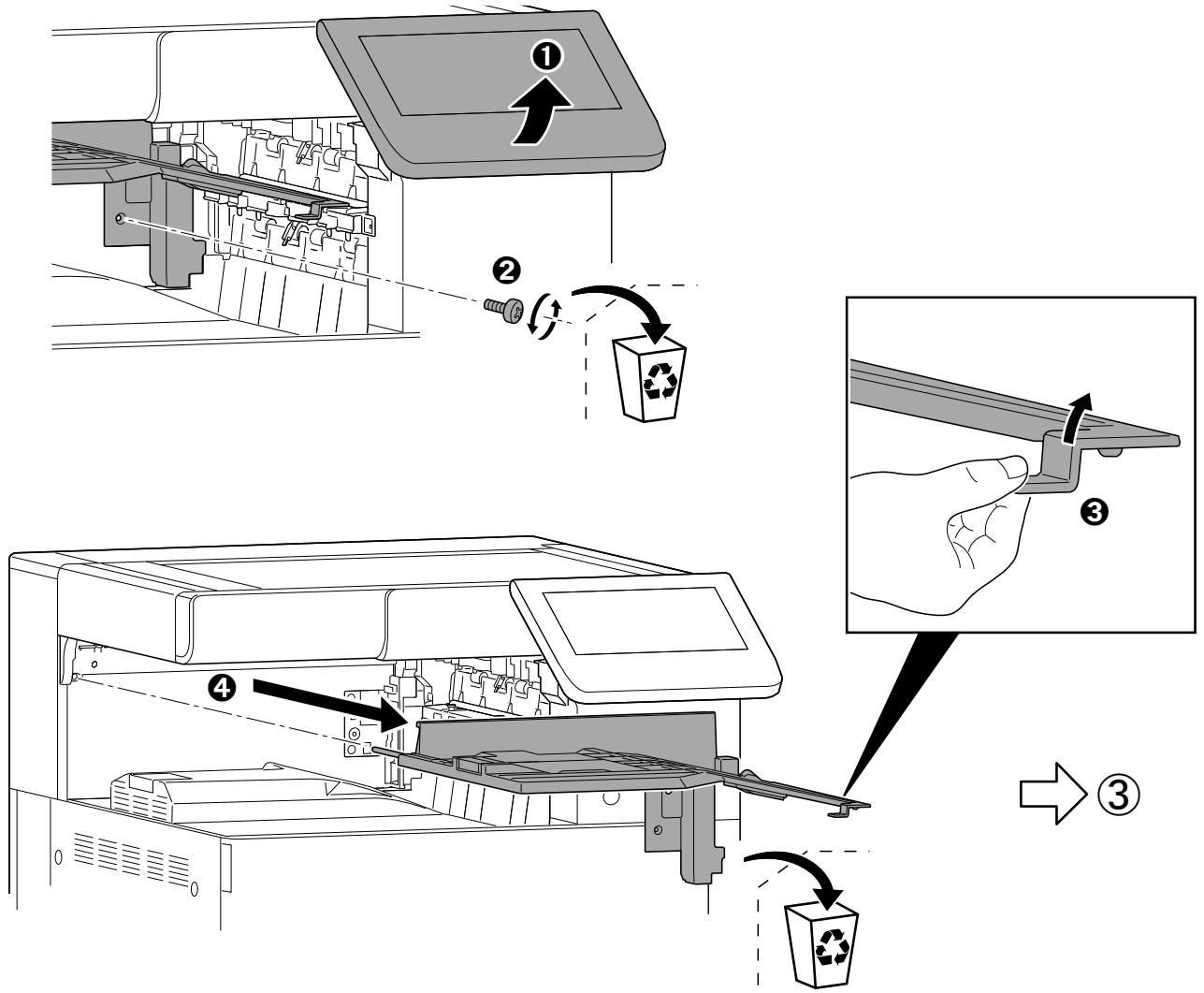

③

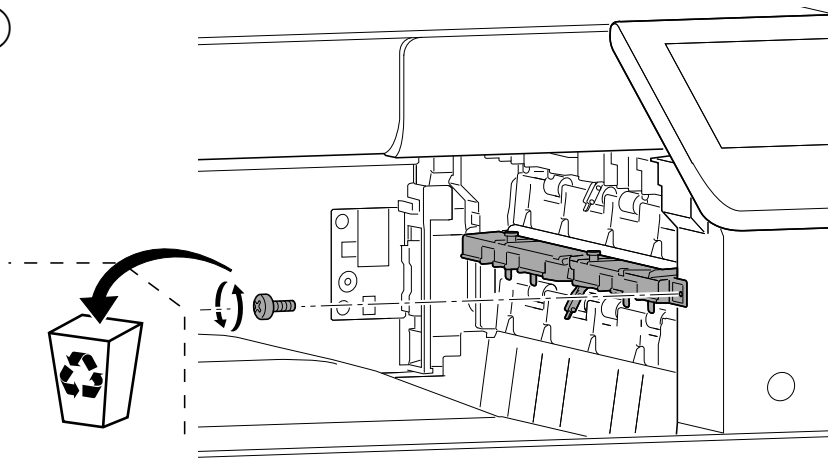

④

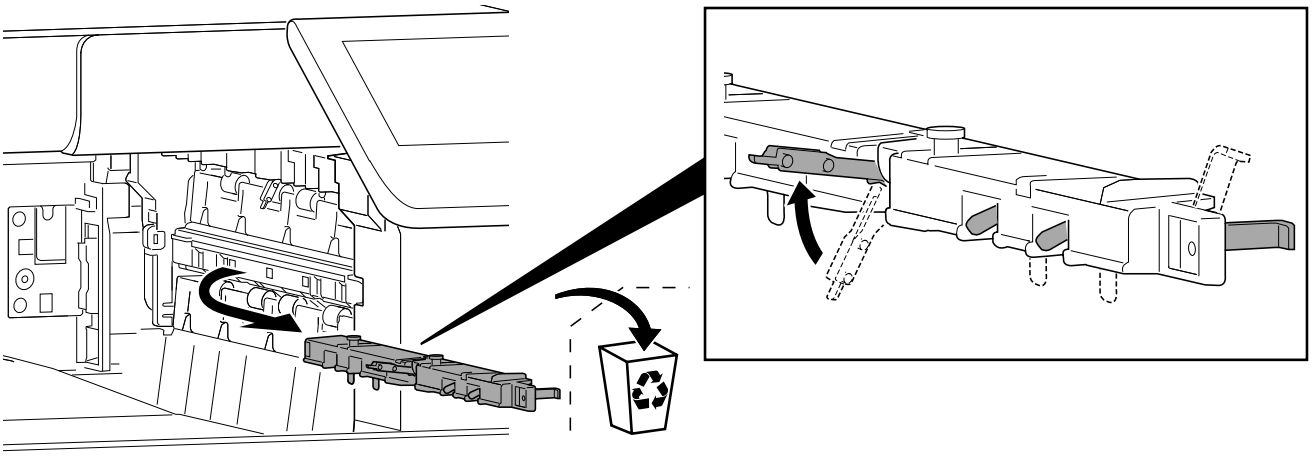

⑤

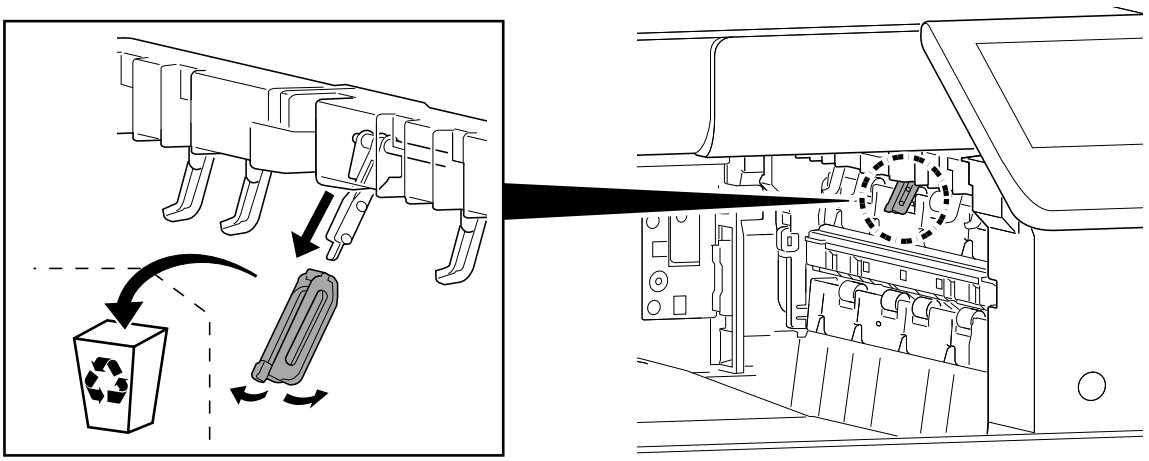

⑥

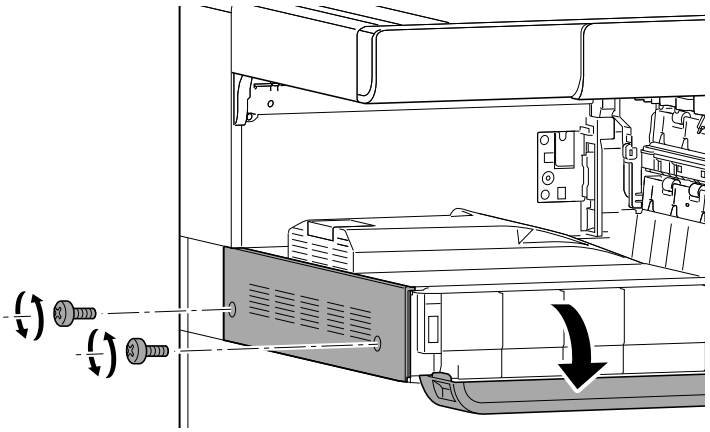

⑦

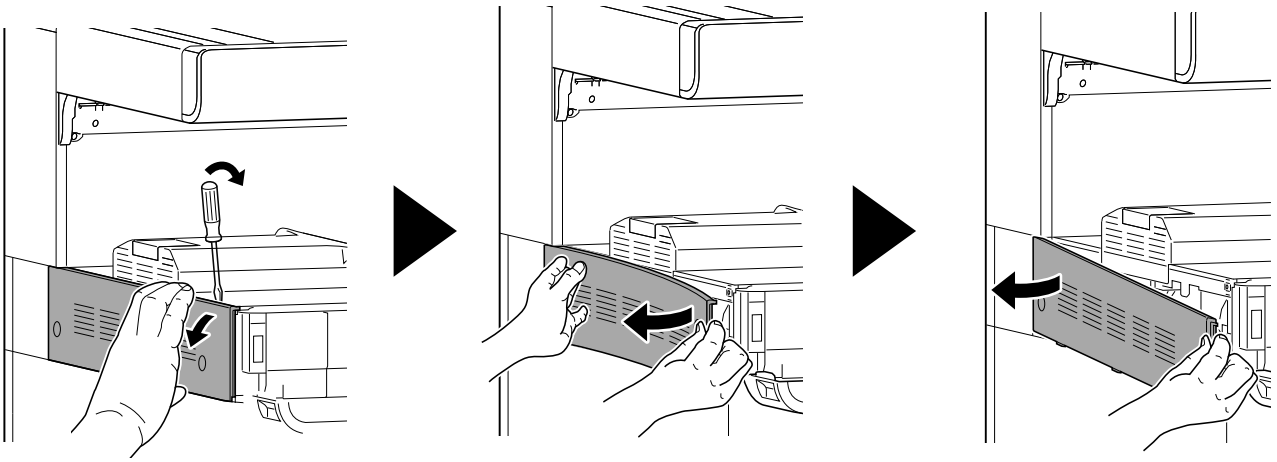

⑧

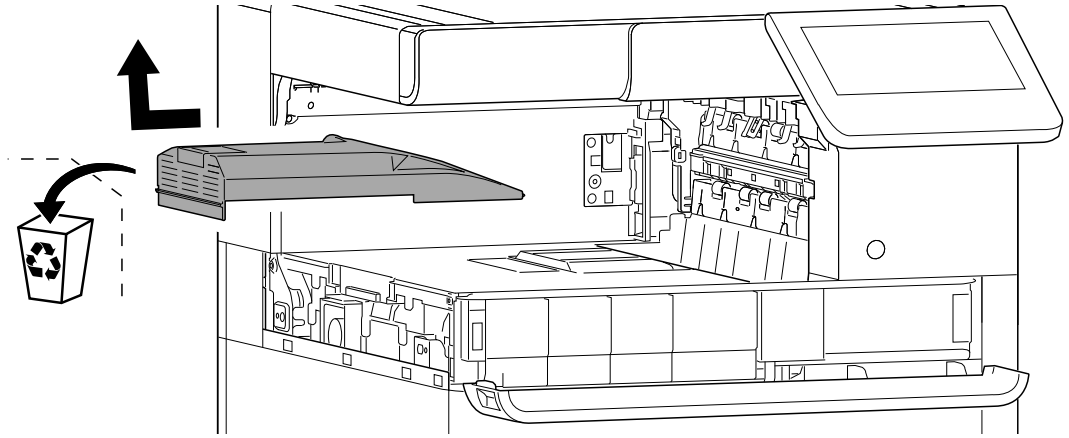

⑨

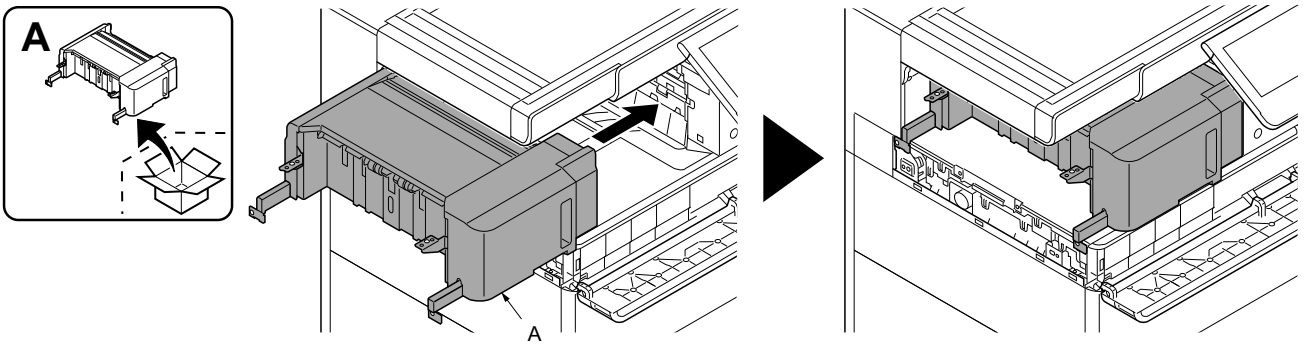

⑩

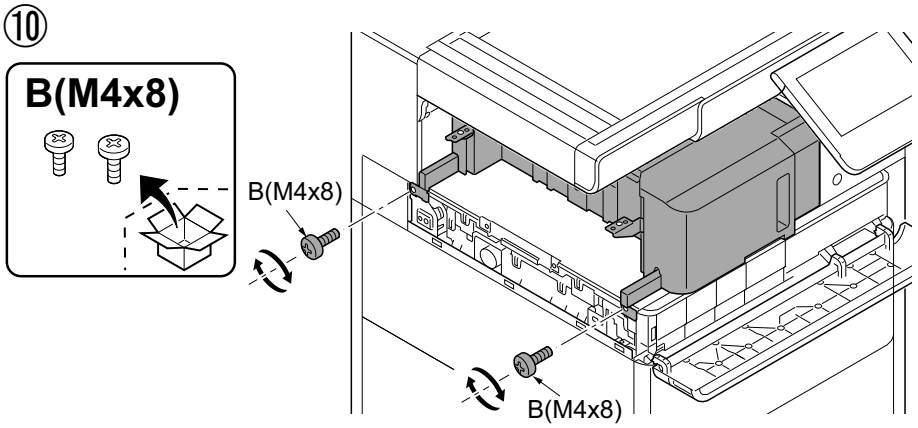

⑪

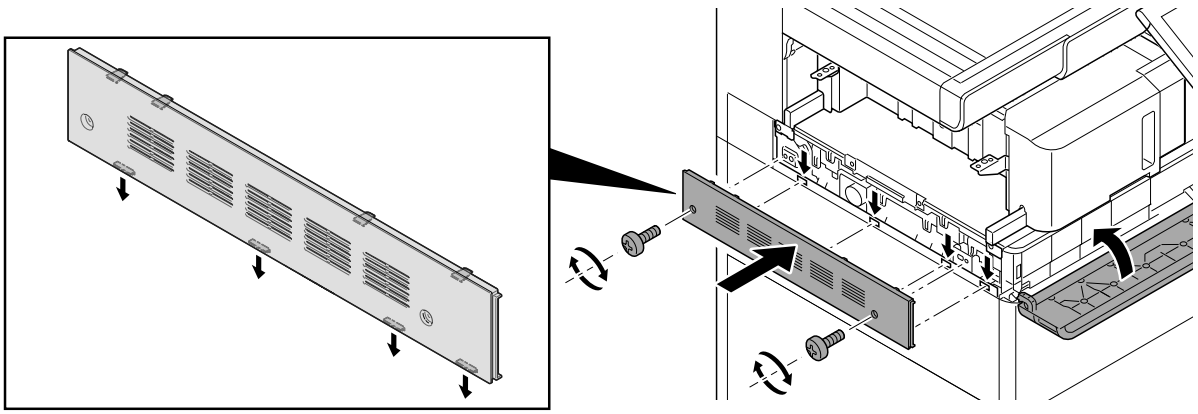

⑫

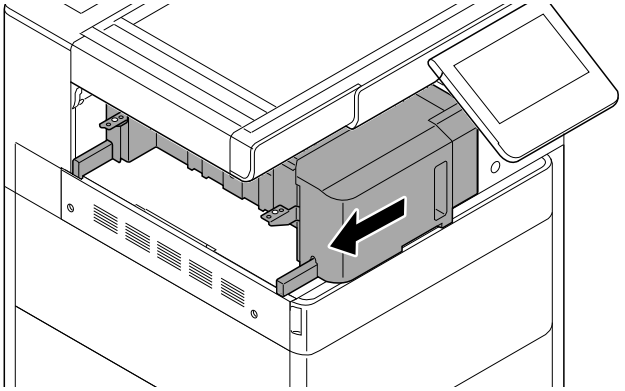

⑬

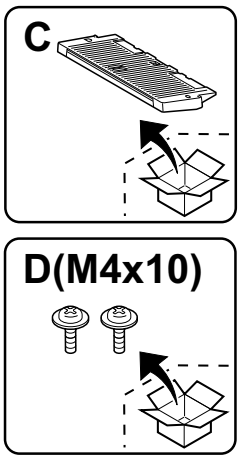

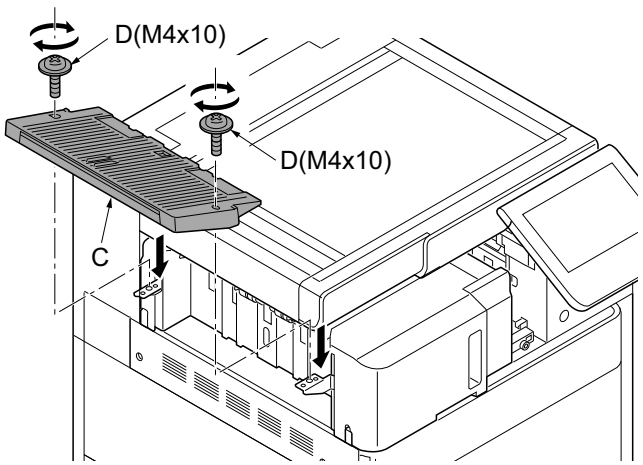

⑭

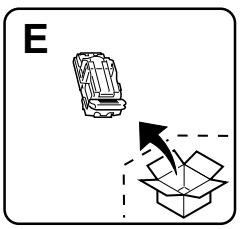

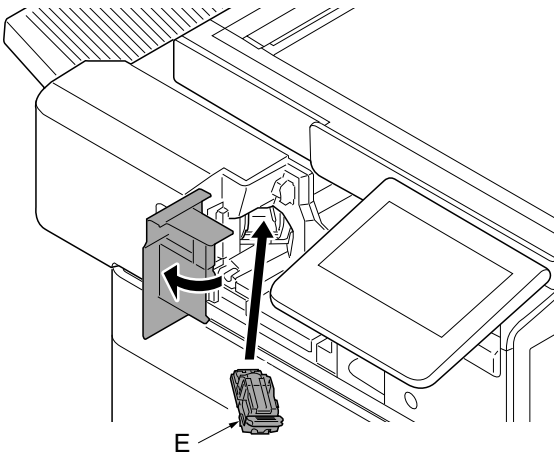

⑮

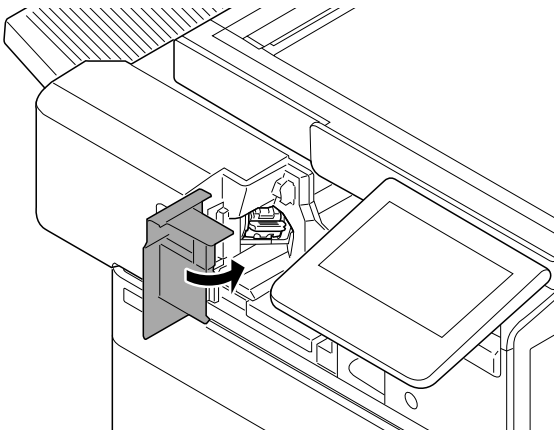

⑯

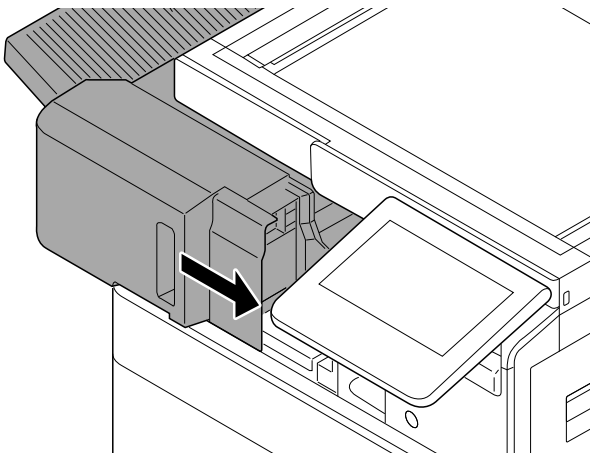

⑰

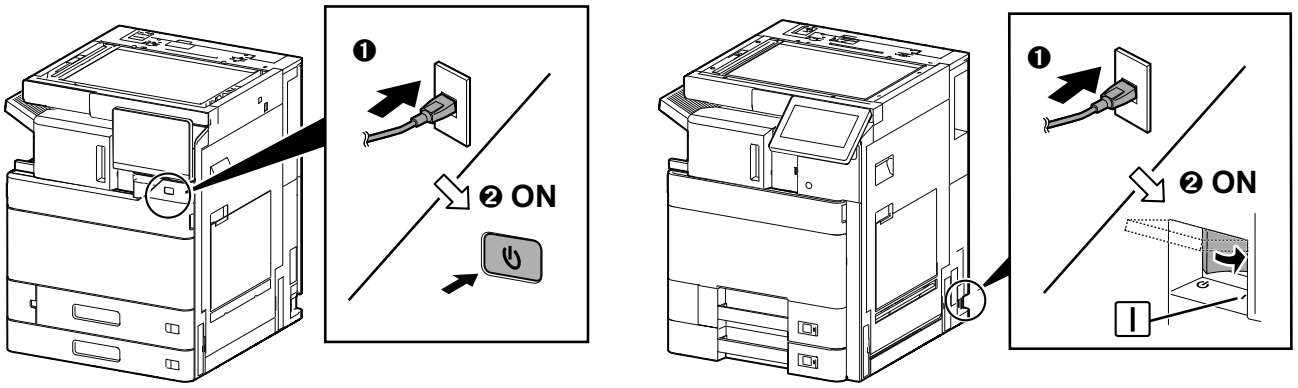

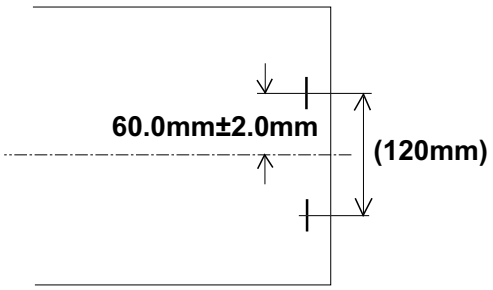

(EN)

Adjusting the stapling position

1. Connect the machine power plug to the wall outlet and turn the machine main power switch on.
2. Make a test copy using staple mode (double stapled).
3. Check whether the stapling position is off-center.If the staple position is off-center, follow the procedure below to adjust the position.
<Reference value> 60.0 mm ± 2.0 mm from the center of the paper

---

(FR)

Ajustement de la position d'agrafage

1. Insérer la fiche d'alimentation de la machine dans la prise murale et mettre la machine sous tension.
2. Procéder à une copie d'essai en mode agrafage (double agrafage).
3. Vérifier que la position d'agrafage n'est pas en décalage. Si la position d'agrafage est décalée, la régler en procédant de la manière suivante.
<Valeur de référence> 60,0 mm ± 2,0 mm depuis le milieu de la feuille de papier

---

(ES)

Ajuste de la posición de grapado

1. Conecte el enchufe de la máquina al receptáculo de pared y encienda el interruptor principal de la máquina.
2. Haga una copia de prueba en el modo de grapado (grapado doble).
3. Compruebe si la posición de grapado está descentrada. Si la posición de grapado está descentrada, realice el siguiente procedimiento para ajustar la posición.
<Valor de referencia> 60,0 mm ± 2,0 mm del centro del papel

(DE)

Justage der Heftposition

1. Stecken Sie den Netzstecker des Geräts in die Wandsteckdose und schalten Sie das Gerät am Gauptschalter ein.
2. Erstellen Sie eine Probekopie im Heftmodus (doppelt geheftet).
3. Prüfen Sie, ob die Heftposition außermittig ist. Falls die Heftposition außermittig ist, müssen Sie sie wie folgend einstellen.
<Bezugswert> 60,0 mm ± 2,0 mm von der Blattmitte

(IT)

Regolazione della posizione di pinzatura

1. Collegare la spina alla presa di corrente a muro e accendere l'interruttore di alimentazione della macchina.
2. Eseguire una copia di prova utilizzando la modalità di spillatura con punti metallici (spillatura doppia).
3. Verificare che la posizione di spillatura non sia fuori centro. Se la posizione di spillatura è fuori centro, seguire la procedura riportata sotto per regolare la posizione.
<Valore di riferimento> 60,0 mm ± 2,0 mm dal centro del foglio

---

(ZHCN)

调节装订位置

1. 将机器上的电源插头插入电源插座中，打开主电源开关。
2. 在装订模式（2 点固定）下进行测试复印。
3. 确认装订位置的中心偏差。 装订位置偏离中心时，按以下步骤进行调节。
＜基准值＞ 距离纸张中心 60.0mm±2.0mm

(KO)

스테이플 위치 조정

1. 본체 전원플러그를 콘센트에 꽂고 주 전원 스위치를 ON 으로 합니다 .
2. 스테이플 모드 (2 곳) 에서 시험복사를 합니다 .
3. 스테이플 위치의 센터 어긋남을 확인합니다 . 스테이플 위치가 중심에서 벗어난 경우 , 다음 순서로 조정을 합니다 .
＜기준치＞ 용지 센터에서 60.0mm±2.0mm

(JA)

ステープル位置の調整

1. 機械本体の電源プラグをコンセントに差し込み、主電源スイッチを ON にする。
2. ステープルモード(2 箇所止め)でテストコピーを行う。
3. ステープル位置のセンターずれを確認する。ステープル位置が中心からずれていた場合、次の手順で調整を行う。
＜基準値＞ 用紙センターより 60.0mm±2.0mm

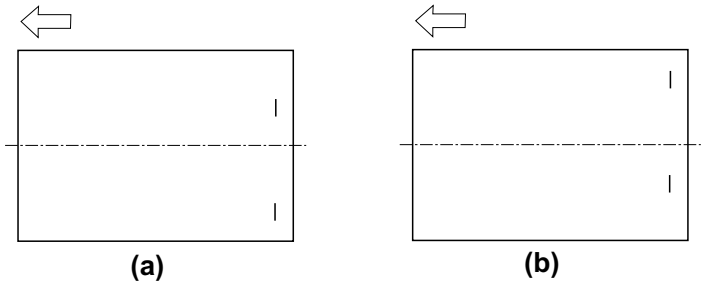

4. Set the maintenance mode U246 and select [Finisher] > [Staple HP].
5. Adjust the values.
If the paper is stapled too close to the front of the machine (a): Decrease the setting value.
If the paper is stapled too close to the rear of the machine (b): Increase the setting value.
Amount of change per step: 0.1 mm
6. Press the [Start] key to confirm the setting value.
7. Perform a test copy.
8. Repeat steps 4 to 7 until the staple position is within the reference value.
<Reference value> 60.0 mm ± 2.0 mm from the center of the paper

---

4. Passez en mode maintenance U246 et sélectionnez [Finisher] > [Staple HP].
5. Régler les valeurs.
Si le papier est agrafé trop près de l'avant de la machine (a): réduire la valeur de réglage.
Si le papier est agrafé trop près de l'arrière de la machine (b): augmenter la valeur de réglage.
Changement par graduation d'échelle : 0,1 mm
6. Appuyer sur la touche de [Départ] pour confirmer la valeur de réglage.
7. Effectuer une copie de test.
8. Recommencer les étapes 4 à 7 jusqu'à ce que la position d'agrafe soit conforme à la valeur de référence.
<Valeur de référence> 60,0 mm ± 2,0 mm depuis le milieu de la feuille de papier

---

4. Configure el modo de mantenimiento U246 y seleccione [Finisher] > [Staple HP].
5. Ajuste los valores.
Si el grapado del papel se encuentra demasiado cerca del frente de la máquina (a): disminuya el valor de configuración.
Si el grapado del papel se encuentra demasiado cerca de la parte posterior de la máquina (b): aumente el valor de configuración.
Magnitud del cambio por incremento: 0,1 mm
6. Pulse la tecla de [Inicio] para confirmar el valor de configuración.
7. Haga una copia de prueba.
8. Repita los pasos 4 a 7 hasta que la posición de grapado se encuentre dentro del valor de referencia.
<Valor de referencia> 60,0 mm ± 2,0 mm del centro del papel

---

4. Aktivieren Sie den Wartungsmodus U246 und wählen Sie [Finisher] > [Staple HP].
5. Die Werte einstellen.
Falls das Papier zu nahe am vorderen Rand des Geräts (a) abgestapelt wird: Verkleinern Sie den Stellwert.
Falls das Papier zu nahe am hinteren Rand des Geräts (b) abgestapelt wird:Vergrößern Sie den Stellwert.
Änderung pro Schritt: 0,1 mm
6. Den Einstellwert durch Drücken der [Start]-Taste bestätigen.
7. Eine Testkopie erstellen.
8. Wiederholen Sie die Schritte 4 bis 7, bis die Heftposition im Bereich des Bezugswerts liegt.
<Bezugswert> 60,0 mm ± 2,0 mm von der Blattmitte

---

4. Impostare la modalità manutenzione U246, quindi selezionare [Finisher] > [Staple HP].
5. Regolare i valori.
Se il foglio viene spillato troppo vicino alla parte anteriore della macchina (a): Diminuire il valore di impostazione.
Se il foglio viene spillato troppo vicino alla parte posteriore della macchina (b): Aumentare il valore di impostazione.
Entità modifica per passo: 0,1 mm
6. Premere il tasto di [Avvio] per confermare il valore dell'impostazione.
7. Eseguire una copia di prova.
8. Ripetere i passi 4 to 7 finché la posizione di spillatura risulta all'interno del valore di riferimento.
<Valore di riferimento> 60,0 mm ± 2,0 mm dal centro del foglio

---

4. 进入维修保养模式 U246，把 [Finisher]>[Staple HP] 。
5. 调整设定值。
装订位置向机器前部偏移时 (a) ：调低设定值。
装订位置向机器后部偏移时 (b) ：调高设定值。
设定值的一个调整单位变化量：0.1mm
6. 按 [开始] 键，以确定设定值。
7. 进行测试复印。
8. 重复步骤 4 ～ 7，直到装订位置在基准范围内为止。
＜基准值＞ 距离纸张中心 60.0mm±2.0mm

---

4. 메인터넌스 모드 U246 을 설정하고 [Finisher] > [Staple HP] 를 선택합니다 .
5. 설정치를 조정합니다 .
스테이플 위치가 기기앞측으로 벗어난 경우 (a):설정치를 낮춥니다 .
스테이플 위치가 기기뒷측으로 벗어난 경우 (b):설정치를 높입니다 .
1 스텝당 변화량:0.1mm
6. [복사 / 시작] 키를 누르고 설정치를 확인합니다 .
7. 시험복사를 합니다 .
8. 스테이플 위치가 기준치내가 될 때까지 순서 4 ~ 7 을 반복합니다 .
＜기준치＞ 용지 센터에서 60.0mm±2.0mm

---

4. メンテナンスモード U246 をセットし、[Finisher] > [Staple HP] を選択する。
5. 設定値を調整する。
ステープル位置が機械前側にずれている場合 (a):設定値を下げる。
ステープル位置が機械後側にずれている場合 (b):設定値を上げる。
1 ステップ当たりの変化量:0.1mm
6. [スタート] キーを押し、設定値を確定する。
7. テストコピーを行う。
8. ステープル位置が基準値内になるまで、手順 4 ～ 7 を繰り返す。
＜基準値＞ 用紙センターより 60.0mm±2.0mm


303RD5671101

DF-7120

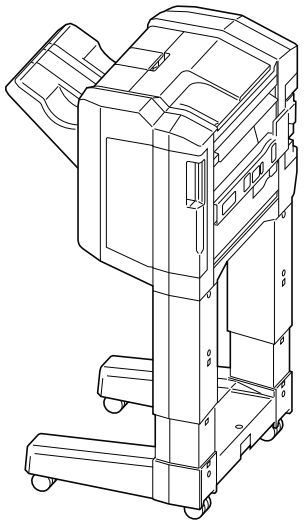

INSTALLATION GUIDE

GUIDE D'INSTALLATION

GUÍA DE INSTALACION

INSTALLATIONSANLEITUNG

GUIDA ALL'INSTALLAZIONE

安装手册

설치안내서

設置手順書

A

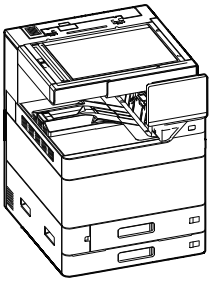

Color MFP
25/25ppm,
35/35ppm,
40/40ppm,
50/50ppm,
60/60ppm,
70/70ppm

Black & White MFP
40ppm, 50ppm,
60ppm,70ppm

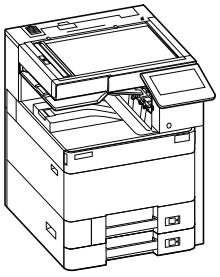

Color MFP
25/25ppm,
32/32ppm,
35/35ppm,
40/40ppm,
50/50ppm,
60/55ppm

Black & White MFP
40ppm, 50ppm,
60ppm

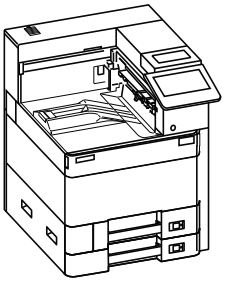

Color Printer
60/55ppm

Black & White Printer
60ppm

B

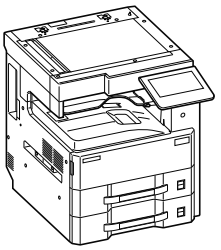

Black & White MFP
30ppm, 32ppm,
35ppm, 40ppm

(EN) A different procedure is required depending on the product which is installed with this unit.Each procedure is described in the following pages.
For installation with the MFP(A) / Printer, see Page 1 to Page 5, Page 14 to Page 15.
For installation with a MFP(B), see Page 6 to Page 15.

(FR) Une procédure différente est requise selon le produit qui est installé avec cette unité.
Chaque procédure est décrite dans les pages suivantes.
Pour l'installation avec une imprimante multifonction(A) / Imprimante, voir Page 1 à Page 5, Page 14 à Page 15.
Pour l'installation avec une imprimante multifonction(B), voir Page 6 à Page 15.

(ES) El procedimiento es diferente según el producto que se instale con esta unidad.En las siguientes páginas, se describe cada procedimiento.
Para la instalación con un MFP(A) / Impresora, consulte las páginas de la 1 a la 5, páginas de la 14 a la 15.
Para la instalación con un MFP(B), consulte las páginas de la 6 a la 15.

(DE) Je nach verwendetem Modell ist eine andere Vorgehensweise zur Installation dieses Teils erforderlich.Die unterschiedlichen Vorgehensweisen werden auf den folgenden Seiten erläutert.
Bei Installation an einem MFP(A) / Drucker siehe Seiten 1 bis 5, Seiten 14 bis 15.
Bei Installation an einem MFP(B) siehe Seiten 6 bis 15.

(IT) Si richiede una procedura diversa in funzione del prodotto su cui è installata l'unità.Le singole procedure sono descritte nelle pagine seguenti.
Per l'installazione con un MFP(A) / stampante, vedere le pagine da 1 a 5, pagine da 14 a 15.
Per l'installazione con un MFP(B), vedere le pagine da 6 a 15.

(ZHCN) 根据安装对象，安装步骤略有不同。各个步骤记载在下面的页面。
安装到MFP(A)/打印机上时，请参见P1-P5,P14-P15。
安装到MFP(B)上时，请参见P6-P15。

(KO) 이 장치에 설치되는 제품에 따라 절차가 다릅니다.다음 페이지에서 각 절차를 설명합니다.
MFP(A)/프린터에 설치하는 경우 1페이지~5페이지,14페이지~15페이지를 참조하십시오.
MFP(B)에 설치하는 경우 6페이지~15페이지를 참조하십시오.

(JA) 装着する対象によって、取付手順は異なります。それぞれ、以下のページに記載しています。
MFP(A)/プリンターに設置する場合；1ページ～5ページ、14ページ～15ページ
MFP(B)に設置する場合；6ページ～15ページ

A

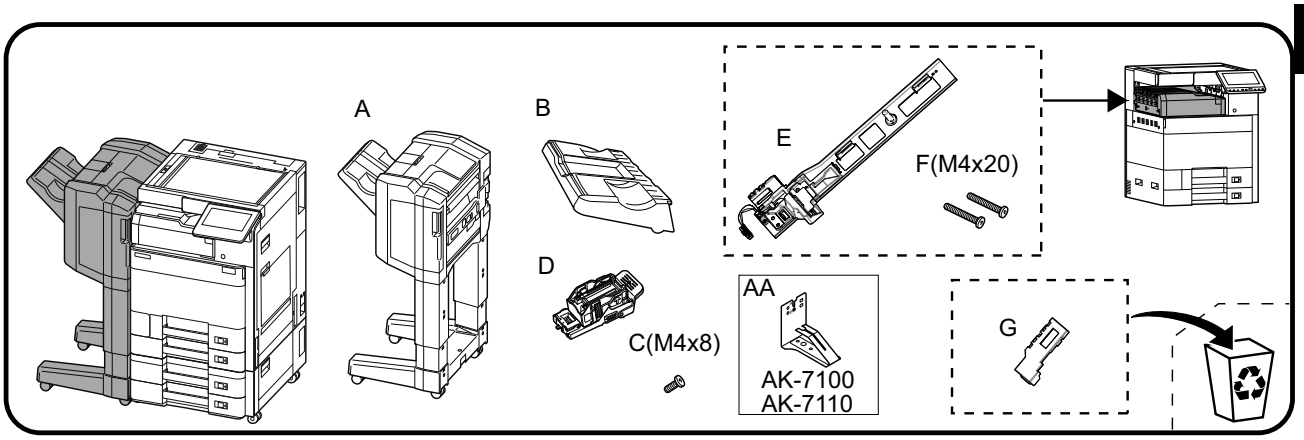

(EN) Be sure to remove any tape and/or cushioning materials from the parts supplied.

(FR) Veillez à retirer les morceaux de bande adhésive et/ou les matériaux de rembourrage des pièces fournies.

(ES) Asegúrese de quitar todas las cintas y/o material amortiguador de las partes suministradas.

(DE) Stellen Sie sicher, dass sämtliche Klebebänder und/oder Polstermaterial von den gelieferten Teilen entfernt wurden.

(IT) Rimuovere tutti i nastri adesivi e/o i materiali di protezione dalle parti fornite.

(ZHCN) 如果附属品上带有固定胶带、缓冲材料时，请务必揭下。

(KO) 동봉품에 고정 테이프 , 완충재가 붙어 있는 경우에는 반드시 제거하십시오.

(JA) 同梱品に固定テープ、緩衝材がついている場合は、必ず取り外すこと。

(EN) While the illustrations in this installation guide are for the MFP models, contents of the installation work are common for the MFP and printer models.

(FR) Les illustrations de ce guide d' installation concernent les modèles MFP, mais les interventions d' installation sont communes aux modèles MFP et imprimantes.

(ES) Aunque las ilustraciones de esta guía de instalación hacen referencia a los modelos MFP, el contenido de los procedimientos de instalación es el mismo para los modelos MFP y de impresora.

(DE) Obwohl die Abbildungen in dieser Installationsanleitung sich auf MFPs beziehen, ist die Vorgehensweise für MFPs und Drucker die gleiche.

(IT) Sebbene le illustrazioni contenute in questa guida di installazione siano relative a modelli MFP, i contenuti della procedura di installazione sono gli stessi per MFP e stampanti.

(ZHCN) 安装步骤中的视图是 MFP 机型，不过 MFP 和打印机的安装步骤是相同的。

(KO) 이 설치 가이드는 MFP모델용이지만, 설치 작업은 MFP와 프린터 공통입니다.

(JA) 設置手順書内のイラストは、MFP ですが、設置作業は MFP/ プリンター共通です。

①

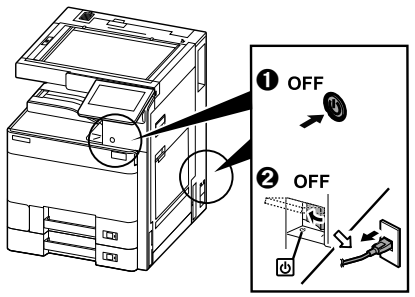

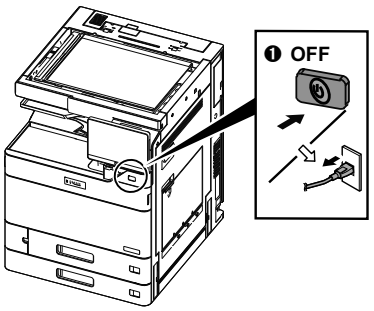

---

②

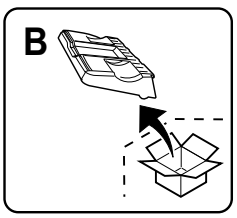

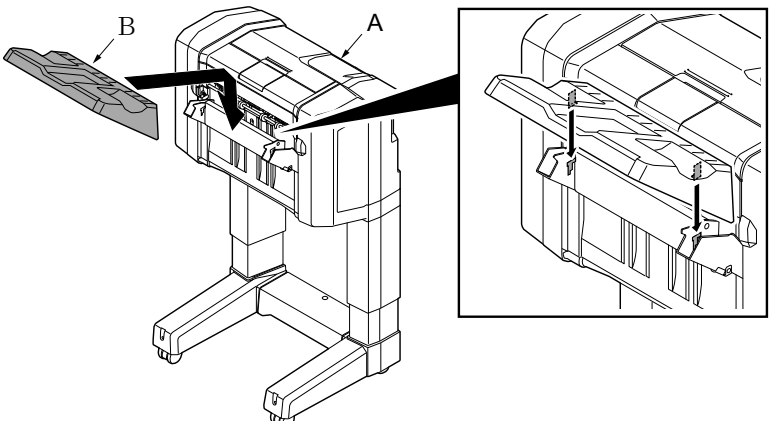

A

③

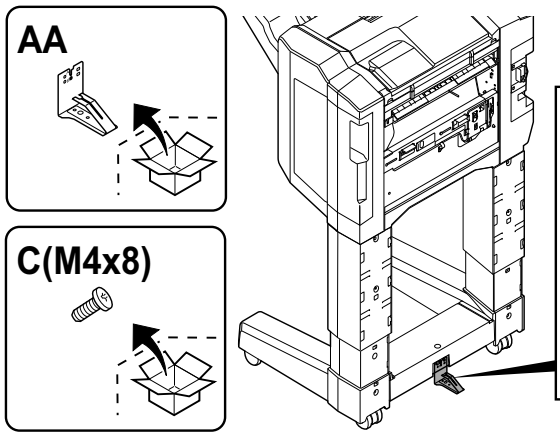

④

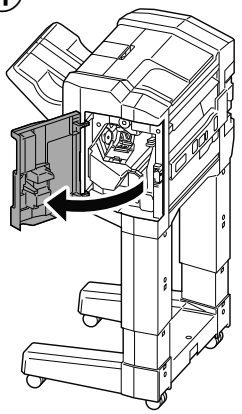

⑤

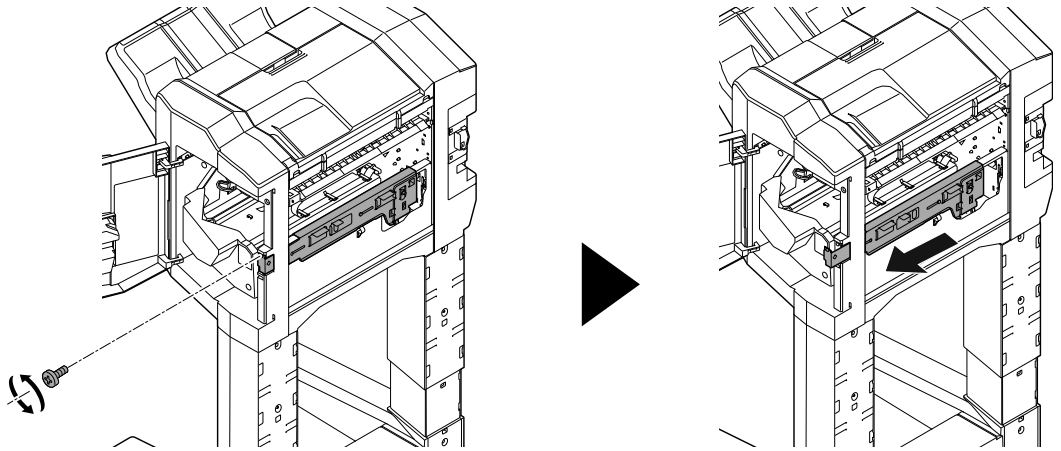

⑥

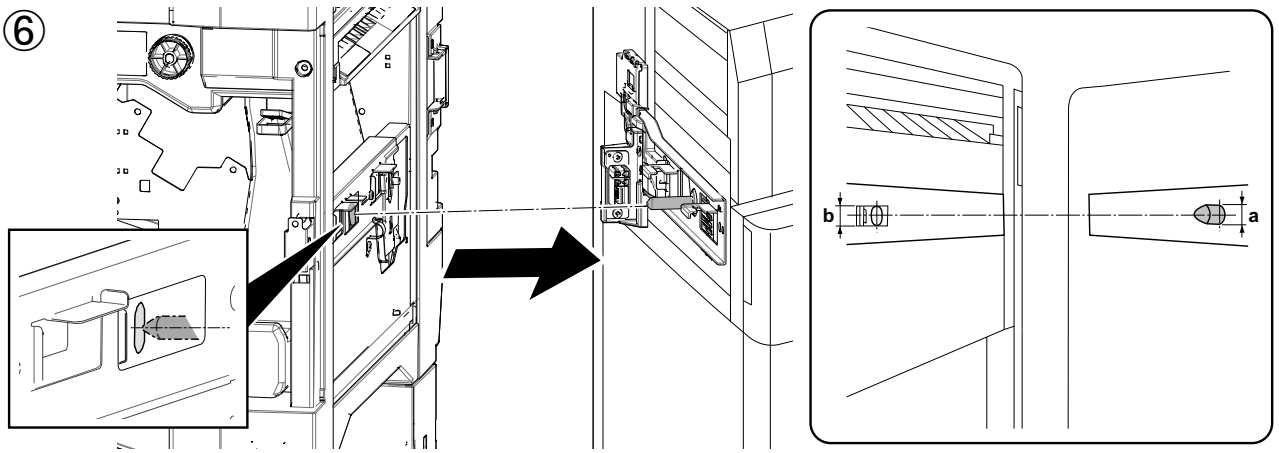

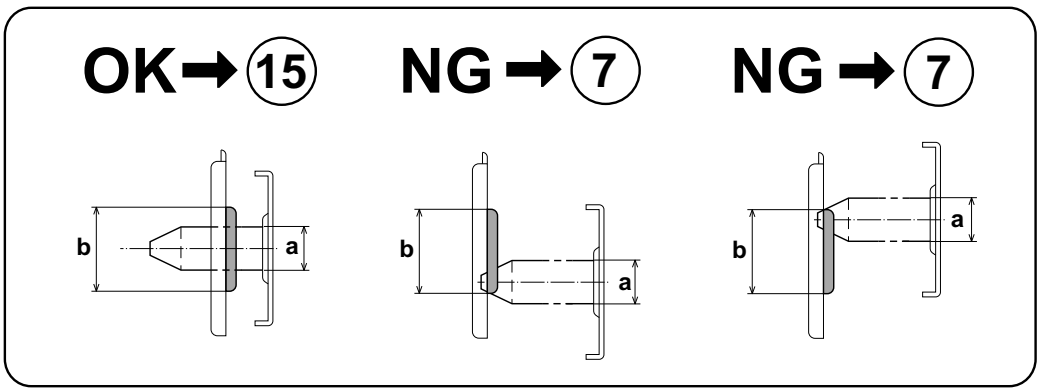

A

⑦

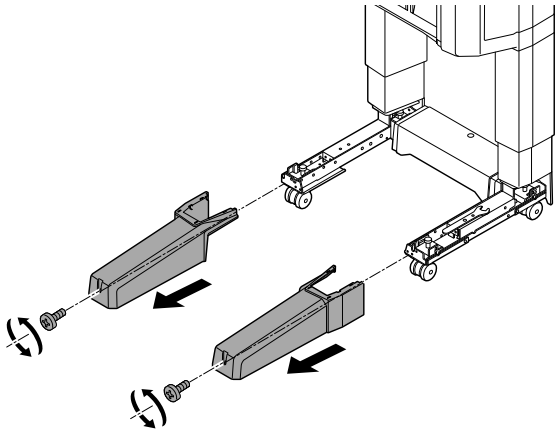

⑧

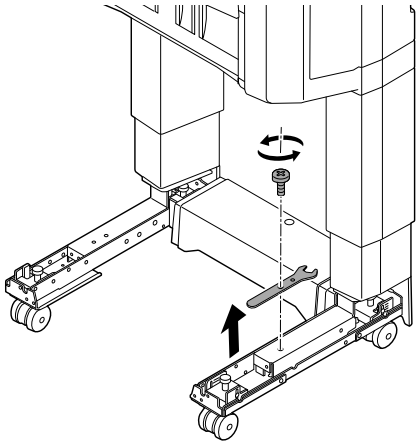

⑨

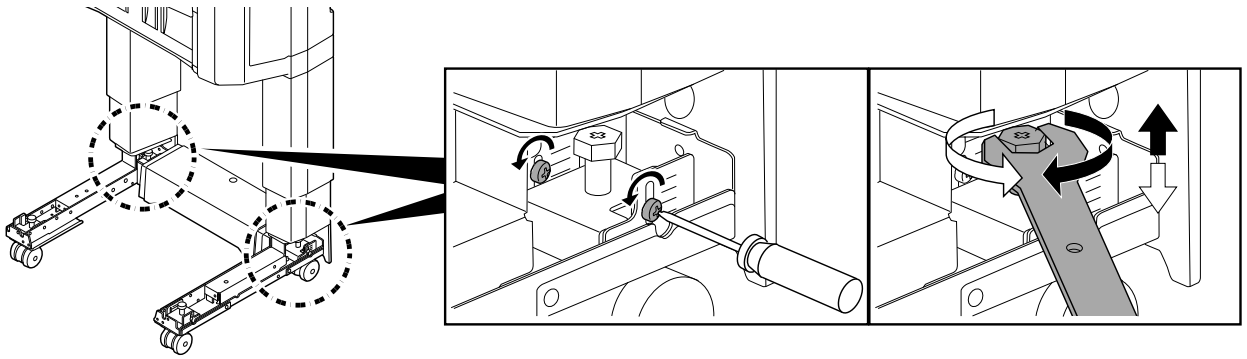

⑩

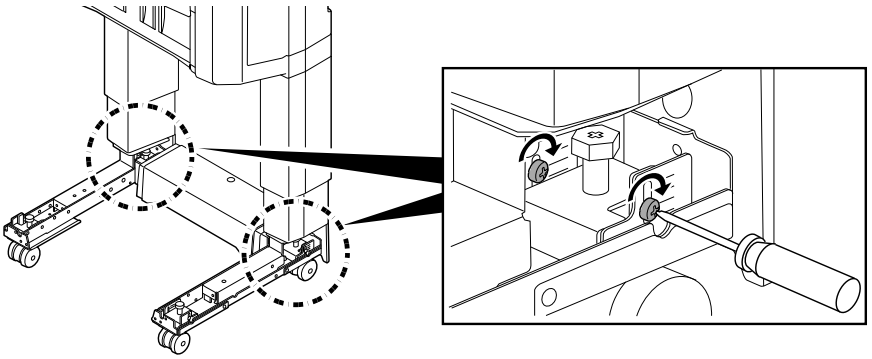

A

⑪

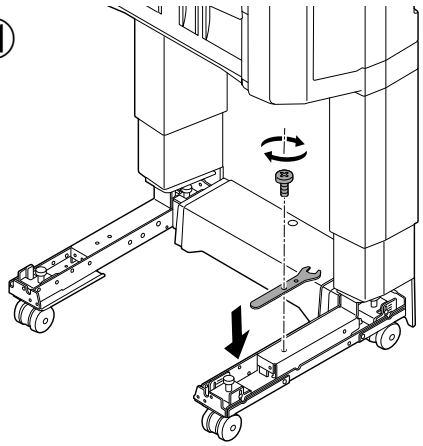

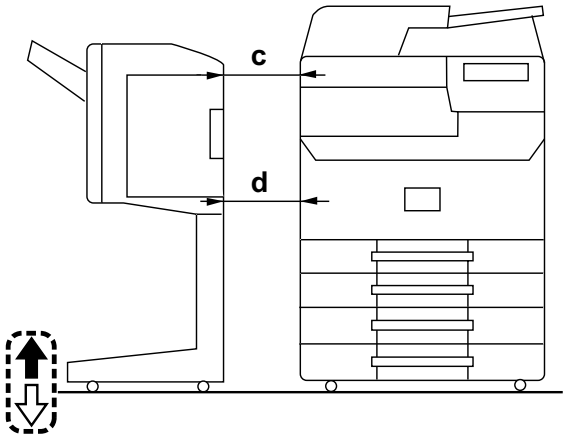

c = d ➡ ⑭

c > d , c < d ➡ ⑫

⑫

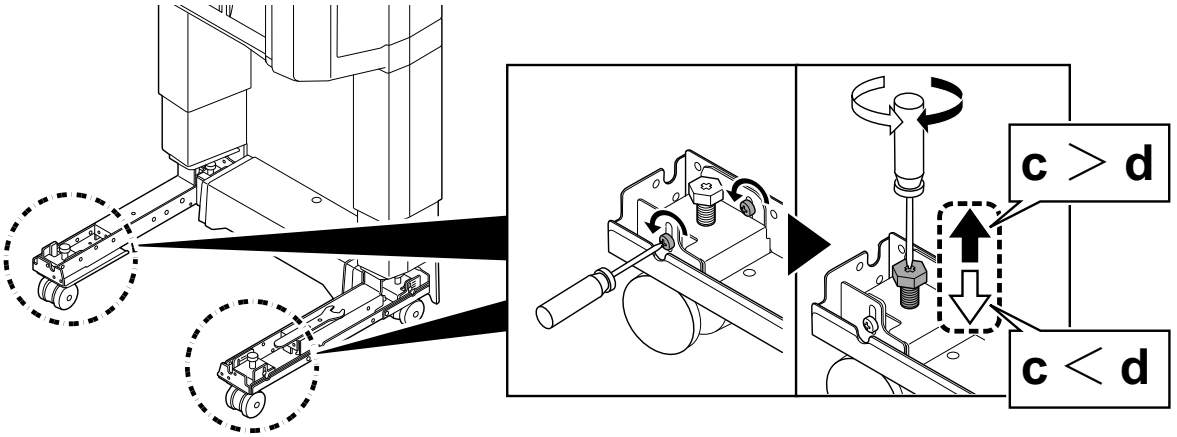

⑬

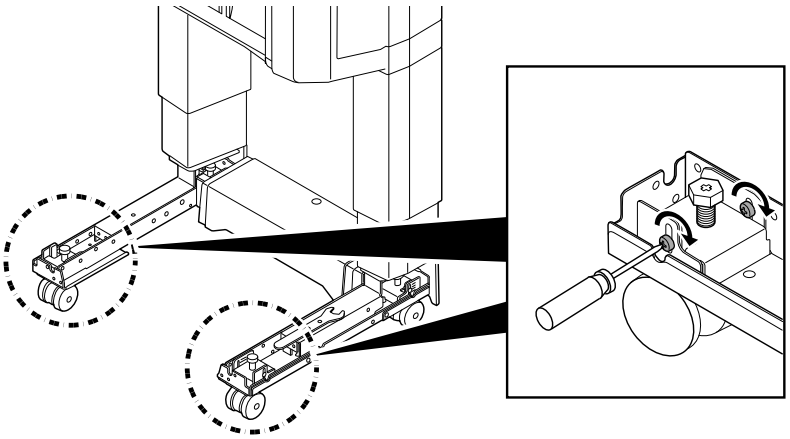

⑭

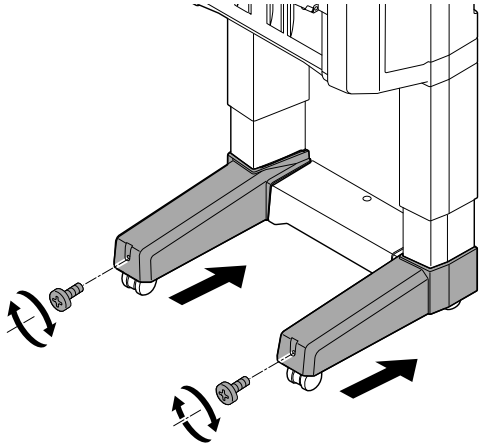

⑮

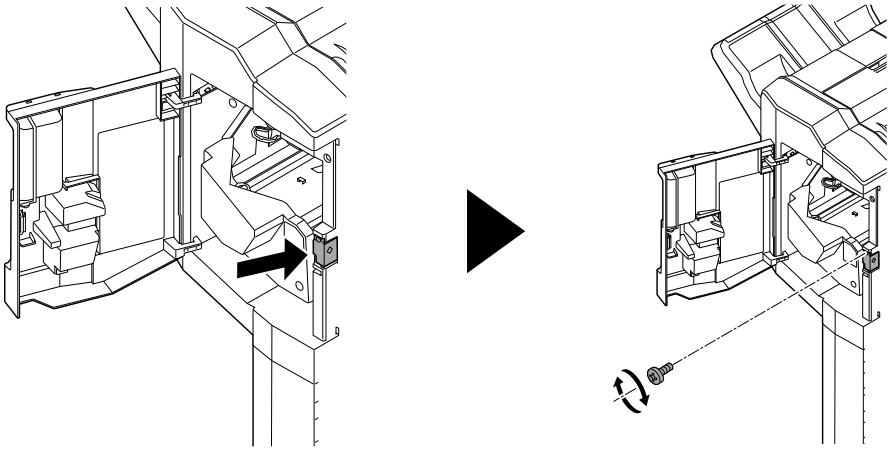

⑯

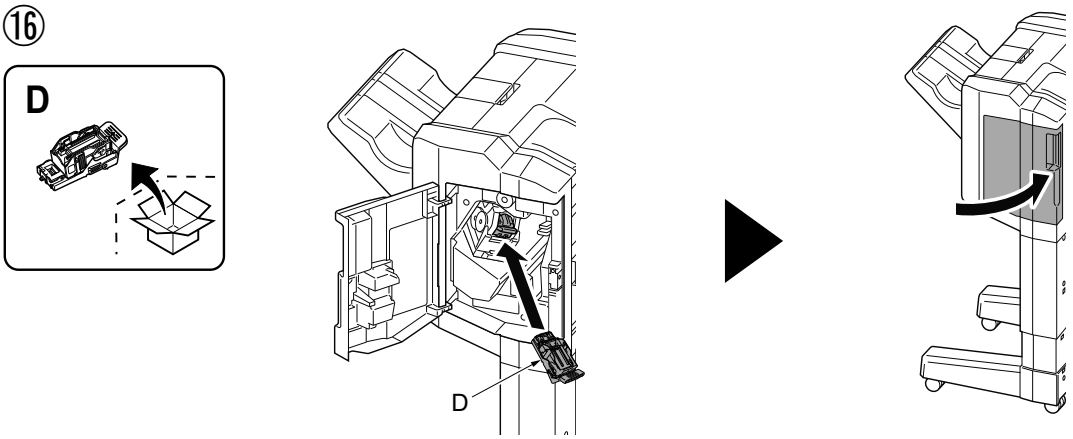

⑰

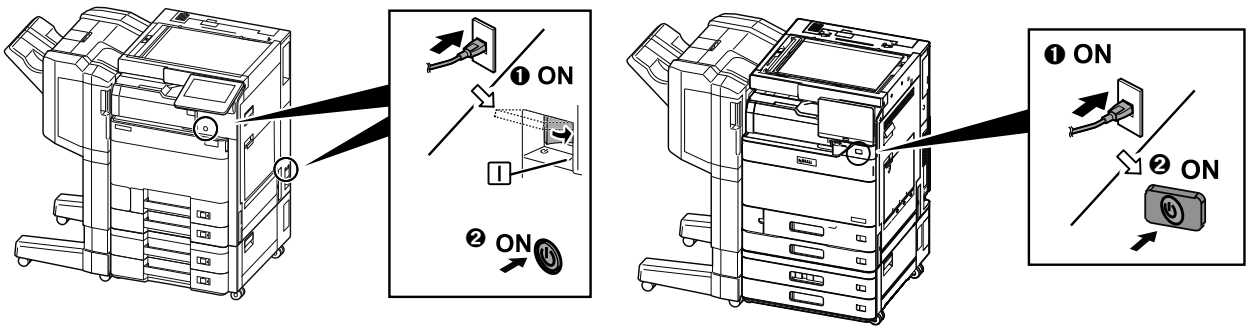

B

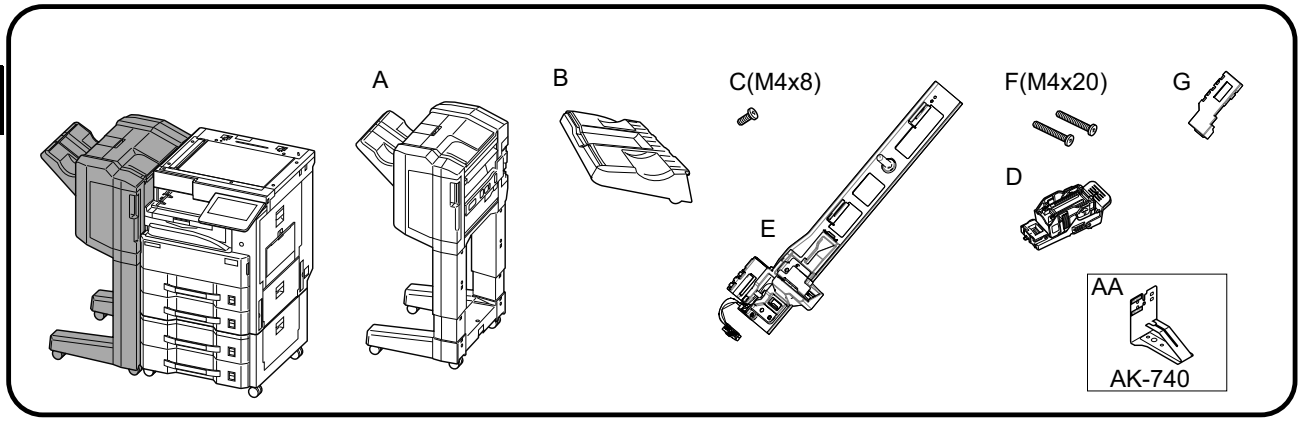

①

(EN) Be sure to remove any tape and/or cushioning materials from the parts supplied.

(FR) Veillez à retirer les morceaux de bande adhésive et/ou les matériaux de rembourrage des pièces fournies.

(ES) Asegúrese de quitar todas las cintas y/o material amortiguador de las partes suministradas.

(DE) Stellen Sie sicher, dass sämtliche Klebebänder und/oder Polstermaterial von den gelieferten Teilen entfernt wurden.

(IT) Rimuovere tutti i nastri adesivi e/o i materiali di protezione dalle parti fornite.

(ZHCN) 如果附属品上带有固定胶带，缓冲材料时务必揭下。

(KO) 동봉품에 고정 테이프 , 완충재가 붙어 있는 경우에는 반드시 제거하십시오.

(JA) 同梱品に固定テープ、緩衝材がついている場合は、必ず取り外すこと。

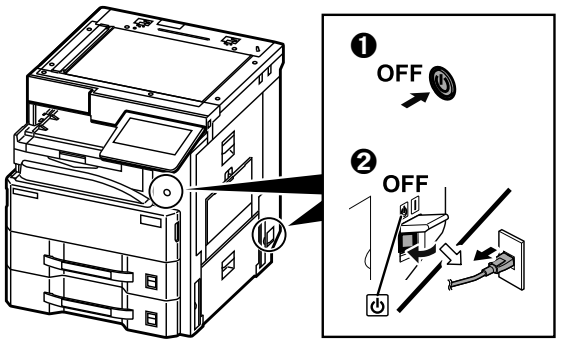

②

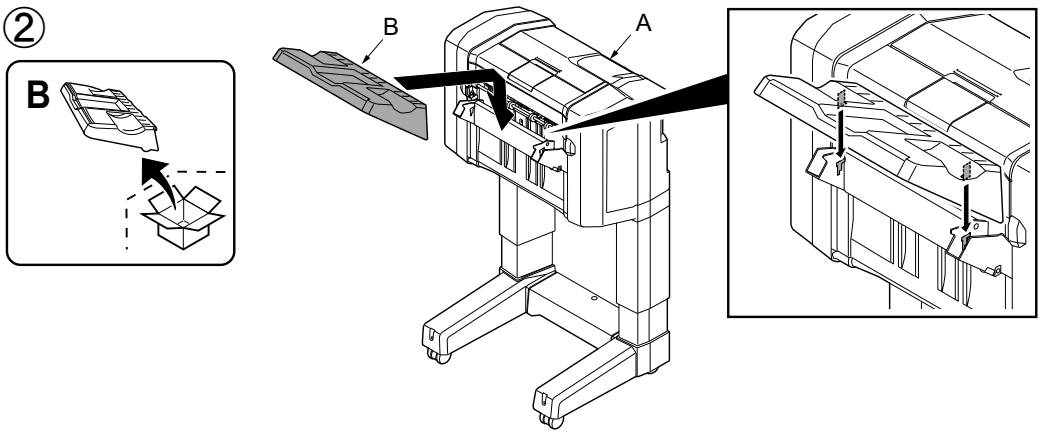

③

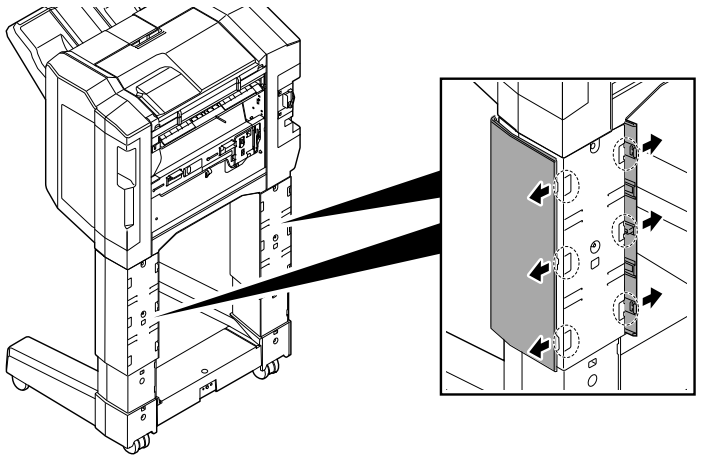

B

④

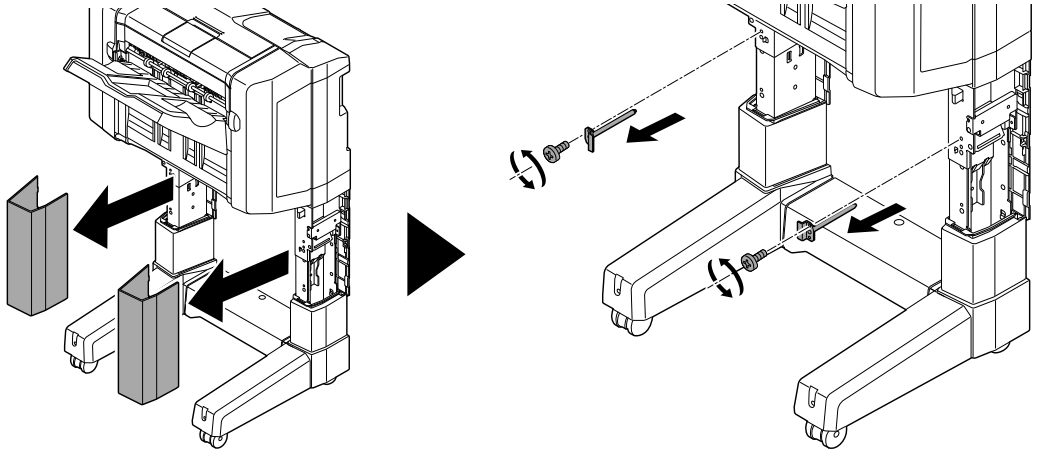

⑤

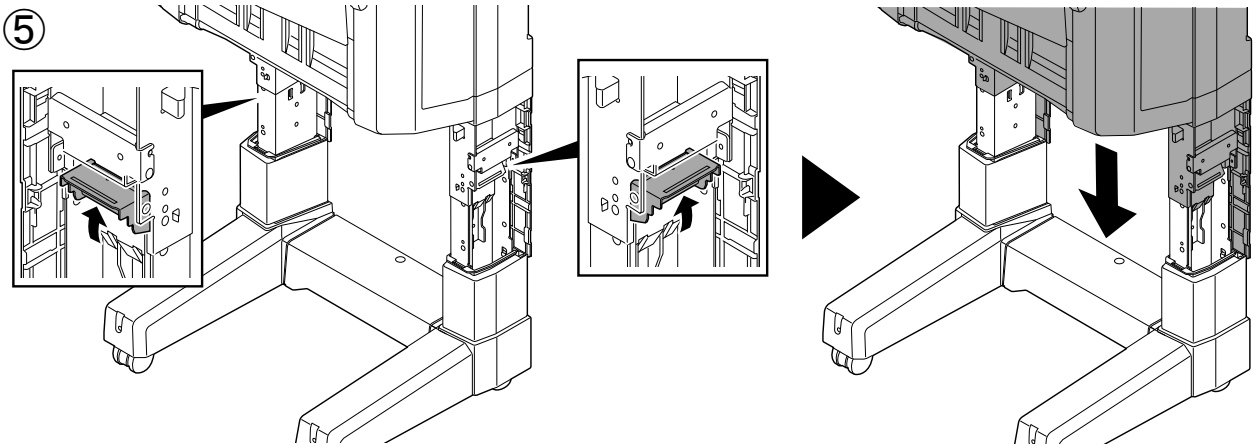

⑥

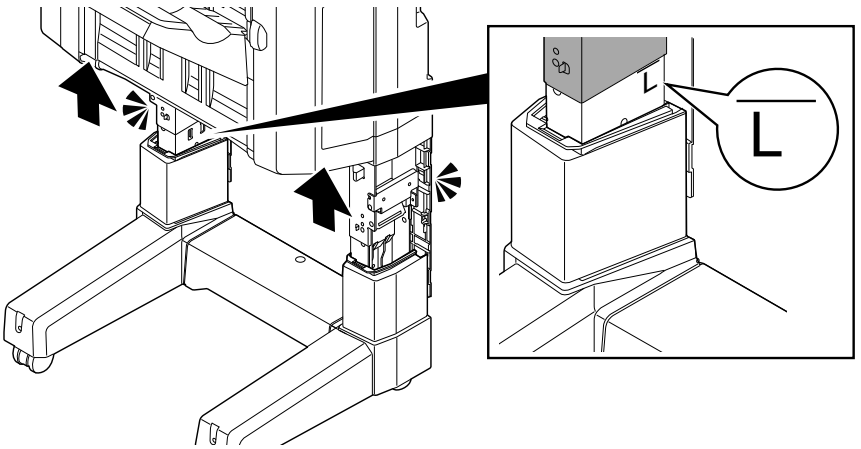

⑦

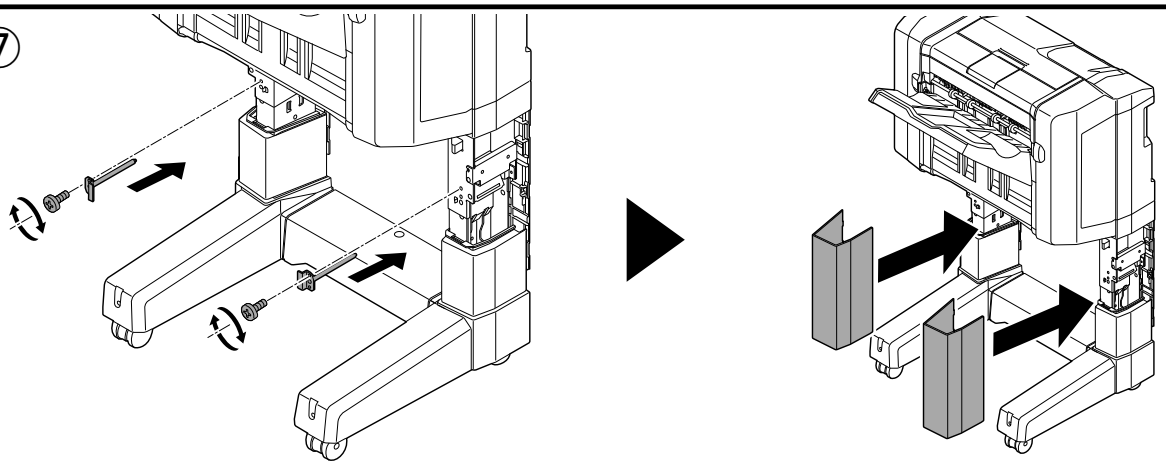

B

⑧

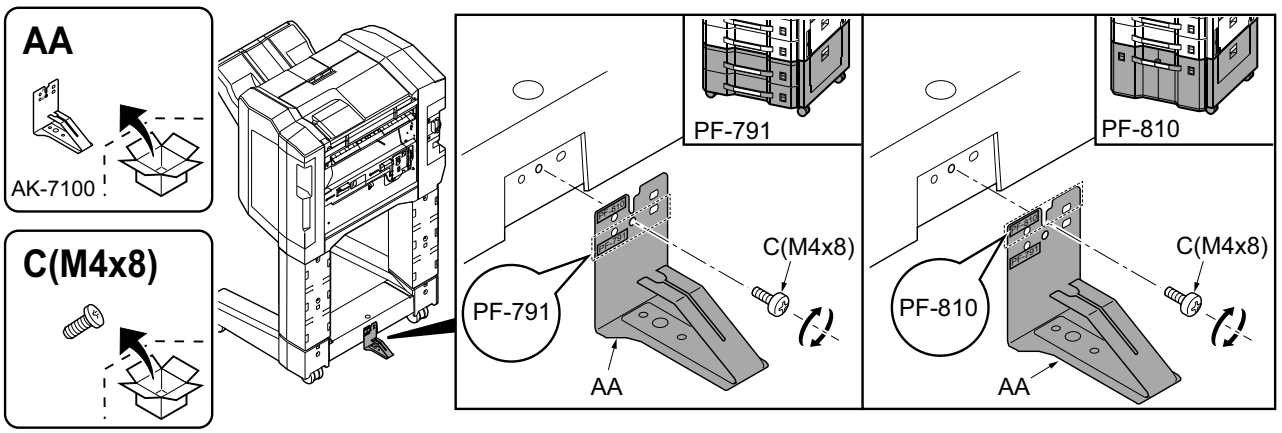
AA
AK-7100
C(M4x8)
PF-791
C(M4x8)
PF-791
AA
PF-810
C(M4x8)
PF-810
AA

⑨

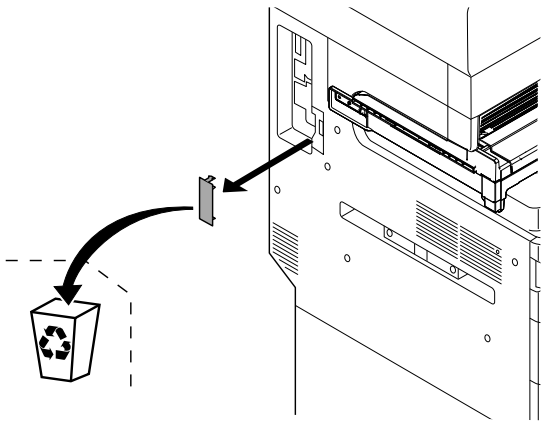

⑩

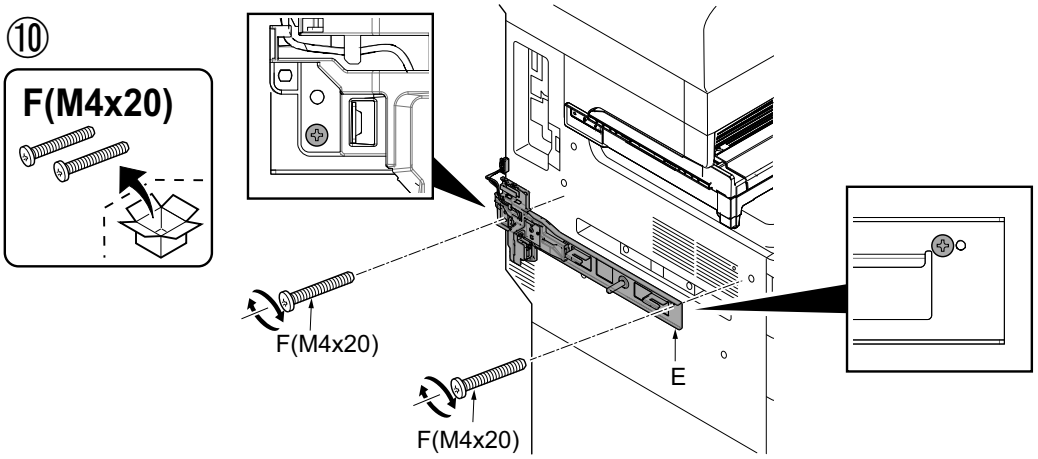
F(M4x20)
F(M4x20)
E

⑪

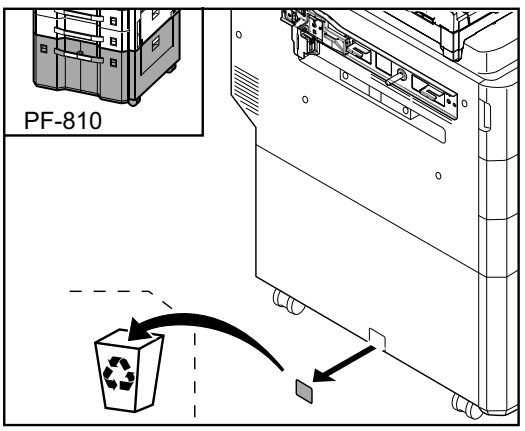
PF-810

B

⑫

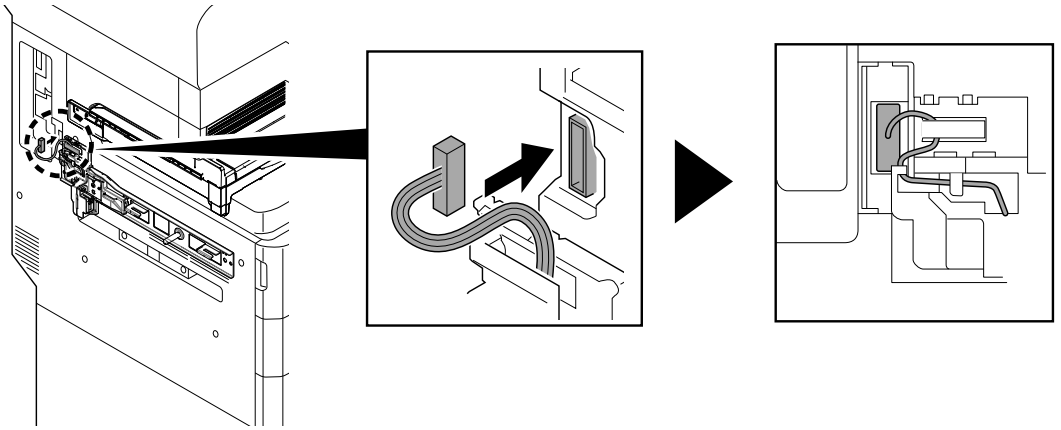

⑬

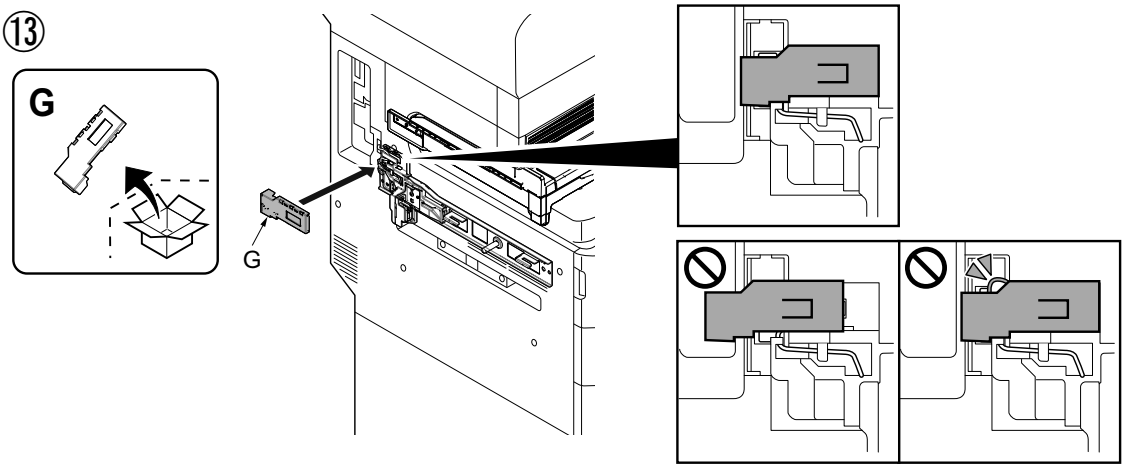

⑭

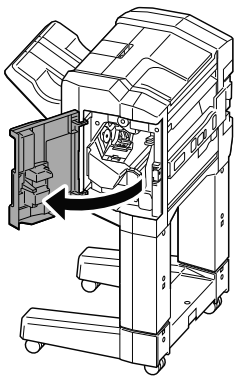

⑮

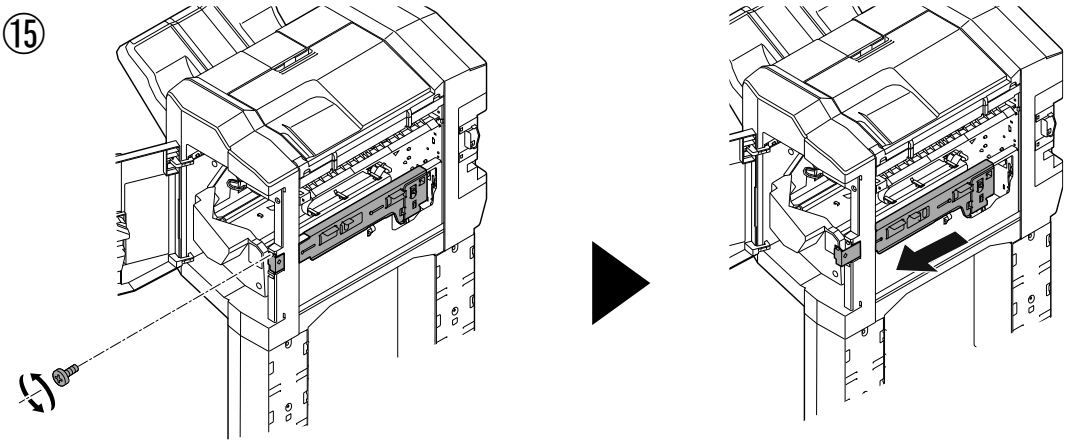

B

⑯

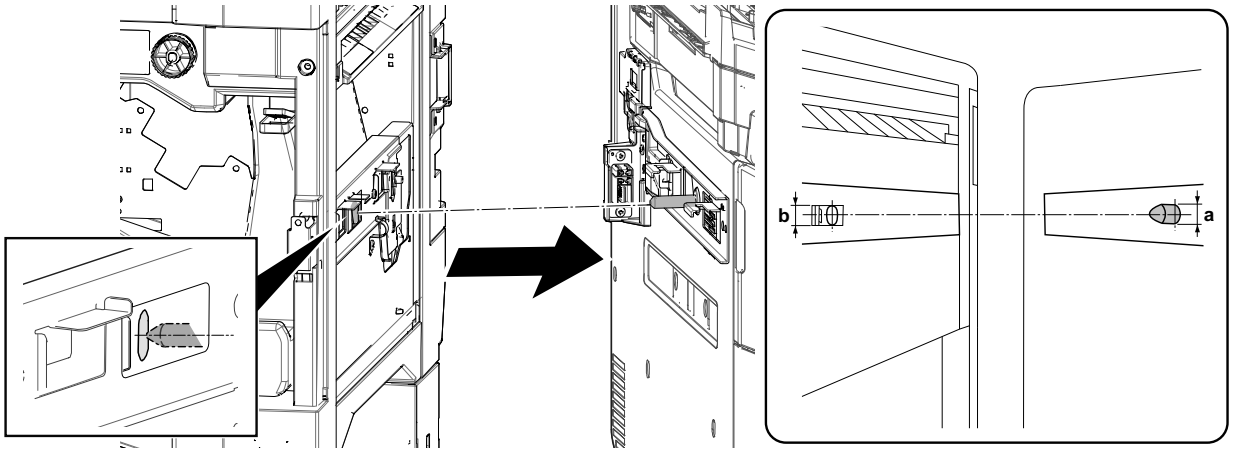

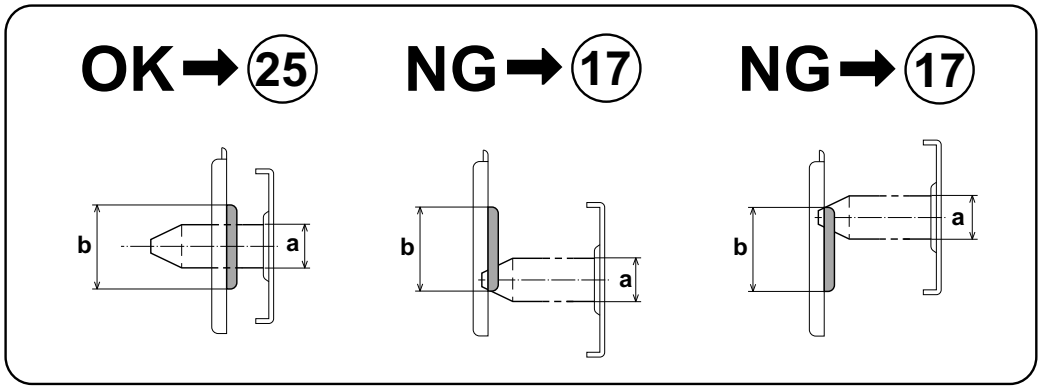

⑰

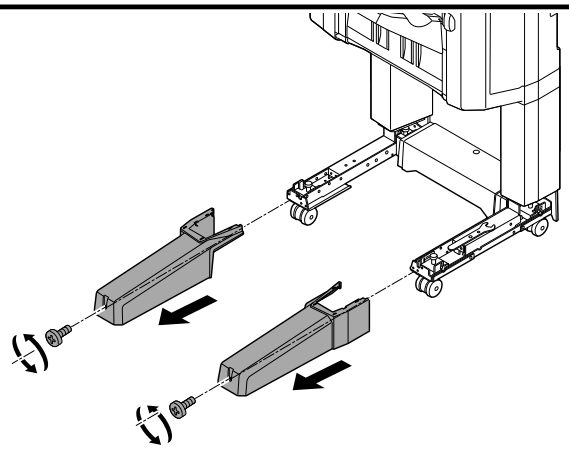

⑱

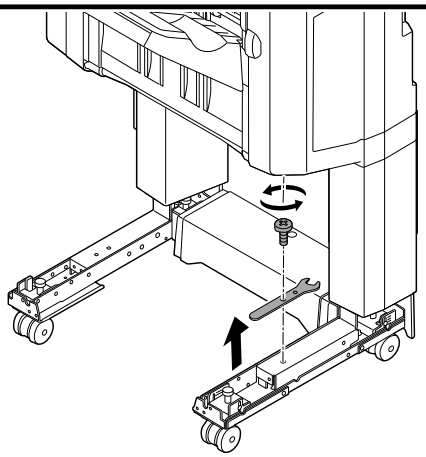

B

⑲

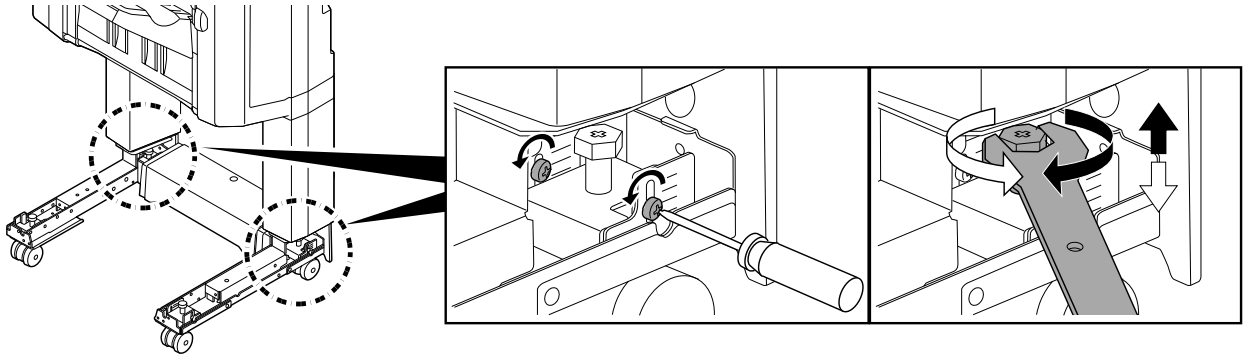

⑳

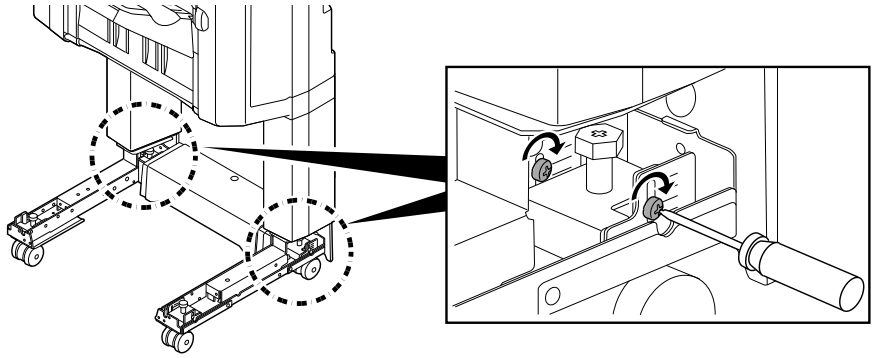

㉑

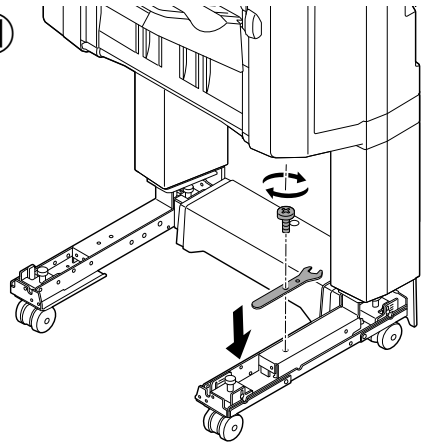

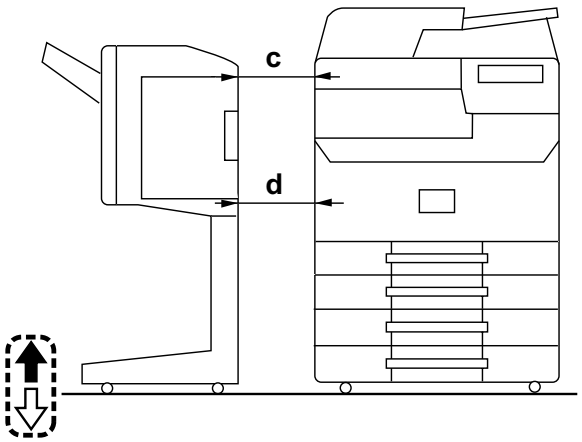

c = d ➡ ㉔

c > d , c < d ➡ ㉒

B

㉒

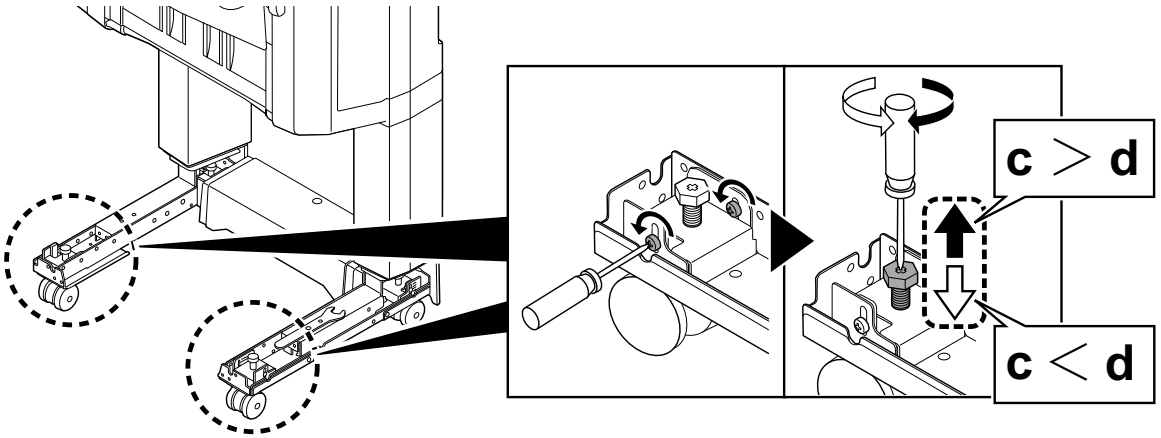

㉓

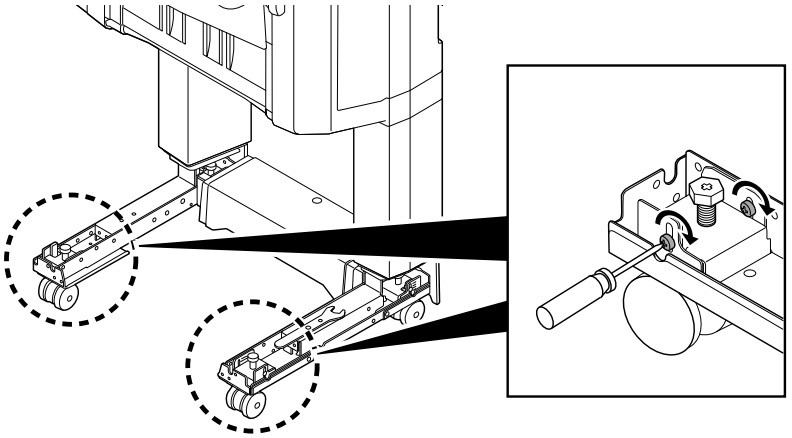

㉔

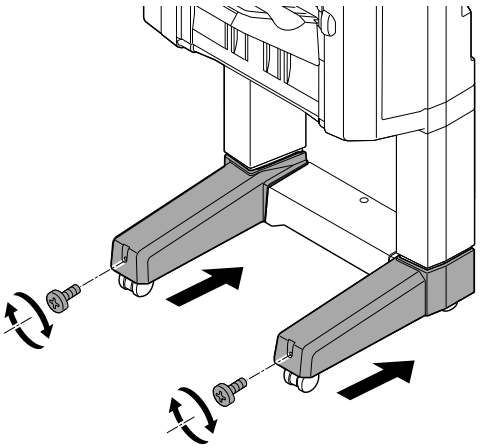

㉕

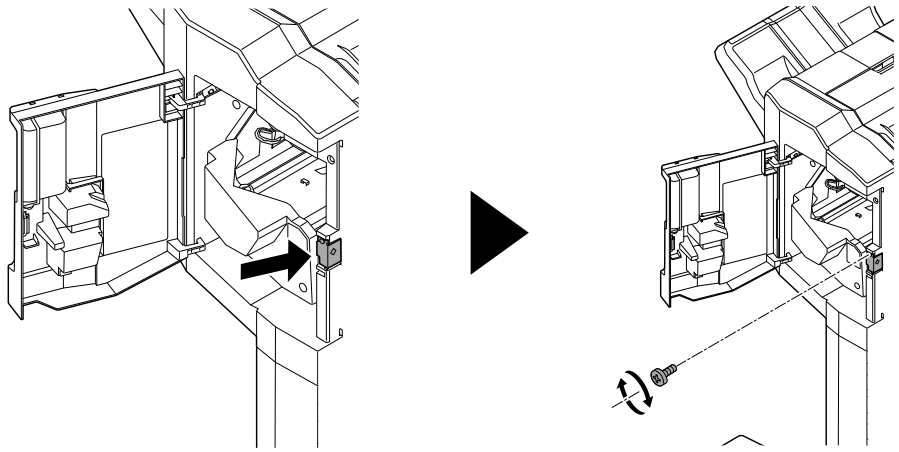

B

㉖

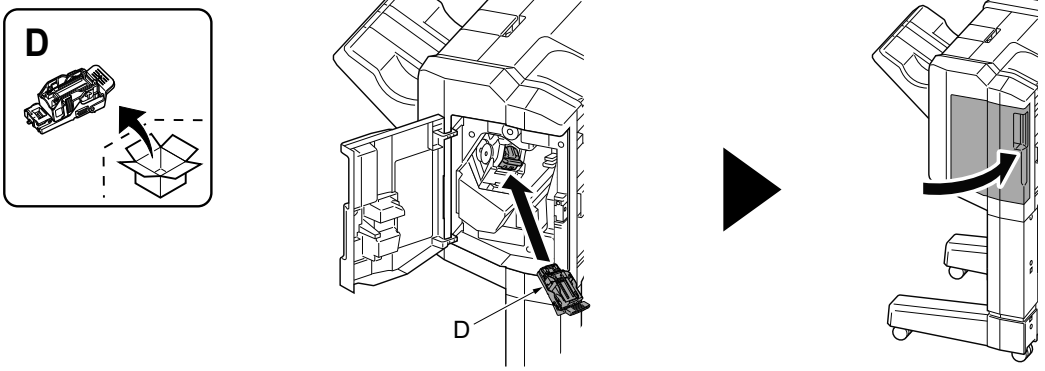

㉗

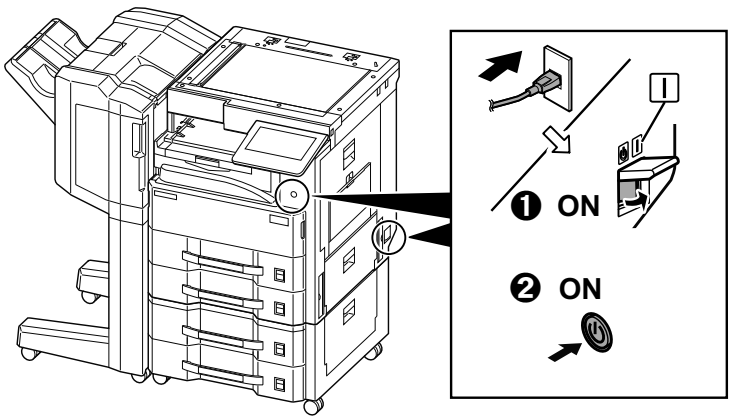

A

B

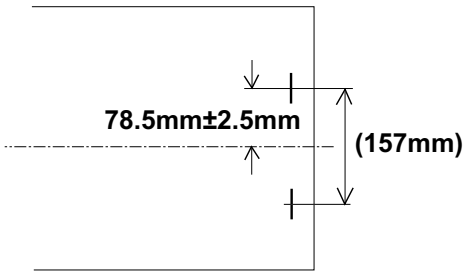

(EN) Adjusting the stapling position

1. Connect the machine power plug to the wall outlet and turn the machine main power switch on.
2. Make a test copy using staple mode (double stapled).
3. Check whether the stapling position is off-center.If the staple position is off-center, follow the procedure below to adjust the position.
<Reference value> 78.5 mm ± 2.5 mm from the center of the paper

---

(FR) Ajustement de la position d'agrafage

1. Insérer la fiche d'alimentation de la machine dans la prise murale et mettre la machine sous tension.
2. Procéder à une copie d'essai en mode agrafage (double agrafage).
3. Vérifier que la position d'agrafage n'est pas en décalage. Si la position d'agrafage est décalée, la régler en procédant de la manière suivante.
<Valeur de référence> 78,5 mm ± 2,5 mm depuis le milieu de la feuille de papier

---

(ES) Ajuste de la posición de grapado

1. Conecte el enchufe de la máquina al receptáculo de pared y encienda el interruptor principal de la máquina.
2. Haga una copia de prueba en el modo de grapado (grapado doble).
3. Compruebe si la posición de grapado está descentrada. Si la posición de grapado está descentrada, realice el siguiente procedimiento para ajustar la posición.
<Valor de referencia> 78,5 mm ± 2,5 mm del centro del papel

(DE) Justage der Heftposition

1. Stecken Sie den Netzstecker des Geräts in die Wandsteckdose und schalten Sie das Gerät am Gauptschalter ein.
2. Erstellen Sie eine Probekopie im Heftmodus (doppelt geheftet).
3. Prüfen Sie, ob die Heftposition außermittig ist. Falls die Heftposition außermittig ist, müssen Sie sie wie folgend einstellen.
<Bezugswert> 78,5 mm ± 2,5 mm von der Blattmitte

(IT) Regolazione della posizione di pinzatura

1. Collegare la spina alla presa di corrente a muro e accendere l'interruttore di alimentazione della macchina.
2. Eseguire una copia di prova utilizzando la modalità di spillatura con punti metallici (spillatura doppia).
3. Verificare che la posizione di spillatura non sia fuori centro. Se la posizione di spillatura è fuori centro, seguire la procedura riportata sotto per regolare la posizione.
<Valore di riferimento> 78,5 mm ± 2,5 mm dal centro del foglio

---

(ZHCN) 调节装订位置

1. 将机器上的电源插头插入电源插座中，打开主电源开关。
2. 在装订模式（2 点固定）下进行测试复印。
3. 确认装订位置的中心偏差。 装订位置偏离中心时，按以下步骤进行调节。
＜基准值＞ 距离纸张中心 78.5㎜±2.5㎜

(KO) 스테이플 위치 조정

1. 본체 전원플러그를 콘센트에 꽂고 주 전원 스위치를 ON 으로 합니다 .
2. 스테이플 모드 (2 곳) 에서 시험복사를 합니다 .
3. 스테이플 위치의 센터 어긋남을 확인합니다 . 스테이플 위치가 중심에서 벗어난 경우 , 다음 순서로 조정을 합니다 .
＜기준치＞ 용지 센터에서 78.5mm±2.5mm

(JA) ステープル位置の調整

1. 機械本体の電源プラグをコンセントに差し込み、主電源スイッチを ON にする。
2. ステープルモード(2 箇所止め)でテストコピーを行う。
3. ステープル位置のセンターずれを確認する。ステープル位置が中心からずれていた場合、次の手順で調整を行う。
＜基準値＞ 用紙センターより 78.5㎜±2.5㎜

A

B

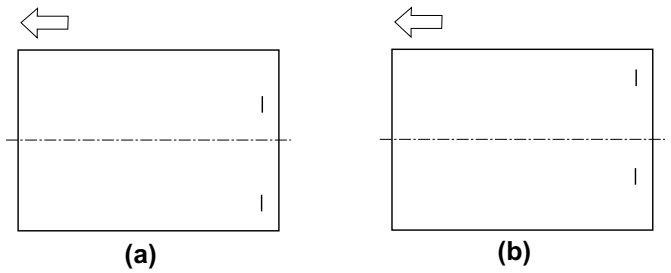

4. Set the maintenance mode U246 and select [Finisher] > [Staple HP].
5. Adjust the values.
If the paper is stapled too close to the front of the machine (a): Increase the setting value.
If the paper is stapled too close to the rear of the machine (b): Decrease the setting value.
Amount of change per step: 0.1 mm
6. Press the [Start] key to confirm the setting value.
7. Perform a test copy.
8. Repeat steps 4 to 7 until the staple position is within the reference value.
<Reference value> 78.5 mm ± 2.5 mm from the center of the paper

---

4. Passez en mode maintenance U246 et sélectionnez [Finisher] > [Staple HP].
5. Régler les valeurs.
Si le papier est agrafé trop près de l'avant de la machine (a): augmenter la valeur de réglage.
Si le papier est agrafé trop près de l'arrière de la machine (b): réduire la valeur de réglage.
Changement par graduation d'échelle : 0,1 mm
6. Appuyer sur la touche de [Départ] pour confirmer la valeur de réglage.
7. Effectuer une copie de test.
8. Recommencer les étapes 4 à 7 jusqu'à ce que la position d'agrafe soit conforme à la valeur de référence.
<Valeur de référence> 78,5 mm ± 2,5 mm depuis le milieu de la feuille de papier

---

4. Configure el modo de mantenimiento U246 y seleccione [Finisher] > [Staple HP].
5. Ajuste los valores.
Si el grapado del papel se encuentra demasiado cerca del frente de la máquina (a): aumente el valor de configuración.
Si el grapado del papel se encuentra demasiado cerca de la parte posterior de la máquina (b): disminuya el valor de configuración.
Magnitud del cambio por incremento: 0,1 mm
6. Pulse la tecla de [Inicio] para confirmar el valor de configuración.
7. Haga una copia de prueba.
8. Repita los pasos 4 a 7 hasta que la posición de grapado se encuentre dentro del valor de referencia.
<Valor de referencia> 78,5 mm ± 2,5 mm del centro del papel

---

4. Aktivieren Sie den Wartungsmodus U246 und wählen Sie [Finisher] > [Staple HP].
5. Die Werte einstellen.
Falls das Papier zu nahe am vorderen Rand des Geräts (a) abgestapelt wird: Vergrößern Sie den Stellwert.
Falls das Papier zu nahe am hinteren Rand des Geräts (b) abgestapelt wird: Verkleinern Sie den Stellwert.
Änderung pro Schritt: 0,1 mm
6. Den Einstellwert durch Drücken der [Start]-Taste bestätigen.
7. Eine Testkopie erstellen.
8. Wiederholen Sie die Schritte 4 bis 7, bis die Heftposition im Bereich des Bezugswerts liegt.
<Bezugswert> 78,5 mm ± 2,5 mm von der Blattmitte

---

4. Impostare la modalità manutenzione U246, quindi selezionare [Finisher] > [Staple HP].
5. Regolare i valori.
Se il foglio viene spillato troppo vicino alla parte anteriore della macchina (a): Aumentare il valore di impostazione.
Se il foglio viene spillato troppo vicino alla parte posteriore della macchina (b): Diminuire il valore di impostazione.
Entità modifica per passo: 0,1 mm
6. Premere il tasto di [Avvio] per confermare il valore dell'impostazione.
7. Eseguire una copia di prova.
8. Ripetere i passi 4 to 7 finché la posizione di spillatura risulta all'interno del valore di riferimento.
<Valore di riferimento> 78,5 mm ± 2,5 mm dal centro del foglio

---

4. 进入维修保养模式 U246，把 [Finisher]>[Staple HP] 。
5. 调整设定值。
装订位置向机器前部偏移时 (a) ：调高设定值。
装订位置向机器后部偏移时 (b) ：调低设定值。
设定值的一个调整单位变化量 ：0.1mm
6. 按 [开始] 键，以确定设定值。
7. 进行测试复印。
8. 重复步骤 4 ～ 7，直到装订位置在基准范围内为止。
＜基准值＞ 距离纸张中心 78.5mm±2.5mm

---

4. 메인터넌스 모드 U246 을 설정하고 [Finisher] > [Staple HP] 를 선택합니다 .
5. 설정치를 조정합니다 .
스테이플 위치가 기기앞측으로 벗어난 경우 (a):설정치를 높입니다 .
스테이플 위치가 기기뒷측으로 벗어난 경우 (b):설정치를 낮춥니다 .
1 스텝당 변화량:0.1mm
6. [복사 / 시작] 키를 누르고 설정치를 확인합니다 .
7. 시험복사를 합니다 .
8. 스테이플 위치가 기준치내가 될 때까지 순서 4 ~ 7 을 반복합니다 .
＜기준치＞ 용지 센터에서 78.5mm±2.5mm

---

4. メンテナンスモードU246 をセットし、[Finisher] > [Staple HP] を選択する。
5. 設定値を調整する。
ステープル位置が機械前側にずれている場合 (a):設定値を上げる。
ステープル位置が機械後側にずれている場合 (b):設定値を下げる。
1 ステップ当たりの変化量:0.1mm
6. [スタート] キーを押し、設定値を確定する。
7. テストコピーを行う。
8. ステープル位置が基準値内になるまで、手順 4 ～ 7 を繰り返す。
＜基準値＞ 用紙センターより 78.5mm±2.5mm


303RV5671101

DF-7140

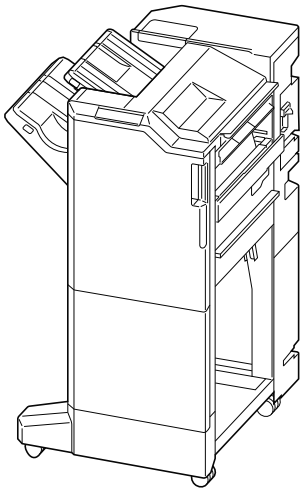

INSTALLATION GUIDE

GUIDE D'INSTALLATION

GUÍA DE INSTALACION

INSTALLATIONSANLEITUNG

GUIDA ALL'INSTALLAZIONE

安装手册

설치안내서

設置手順書

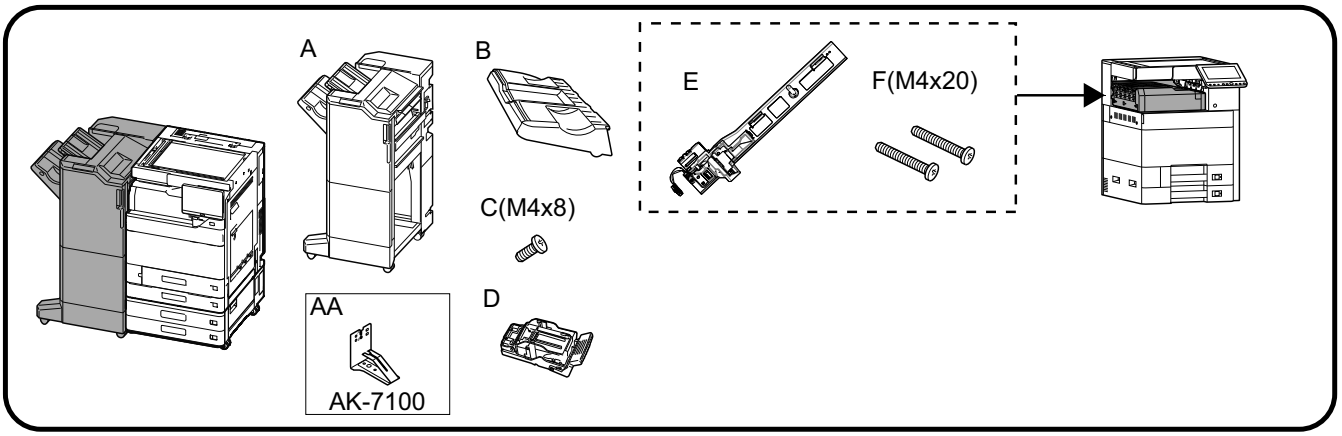

(EN) Be sure to remove any tape and/or cushioning materials from the parts supplied.

(FR) Veillez à retirer les morceaux de bande adhésive et/ou les matériaux de rembourrage des pièces fournies.

(ES) Asegúrese de quitar todas las cintas y/o material amortiguador de las partes suministradas.

(DE) Stellen Sie sicher, dass sämtliche Klebebänder und/oder Polstermaterial von den gelieferten Teilen entfernt wurden.

(IT) Rimuovere tutti i nastri adesivi e/o i materiali di protezione dalle parti fornite.

(ZHCN) 如果附属品上带有固定胶带、缓冲材料时，请务必揭下。

(KO) 동봉품에 고정 테이프 , 완충재가 붙어 있는 경우에는 반드시 제거하십시오.

(JA) 同梱品に固定テープ、緩衝材がついている場合は、必ず取り外すこと。

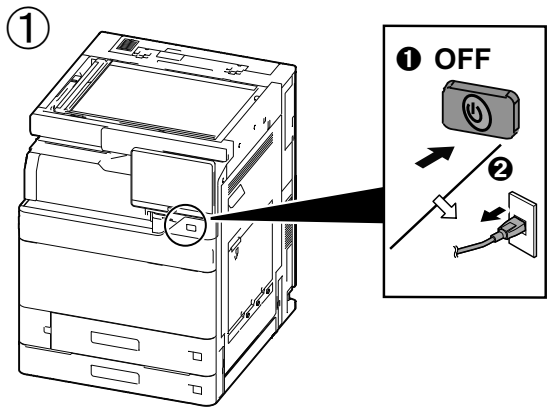

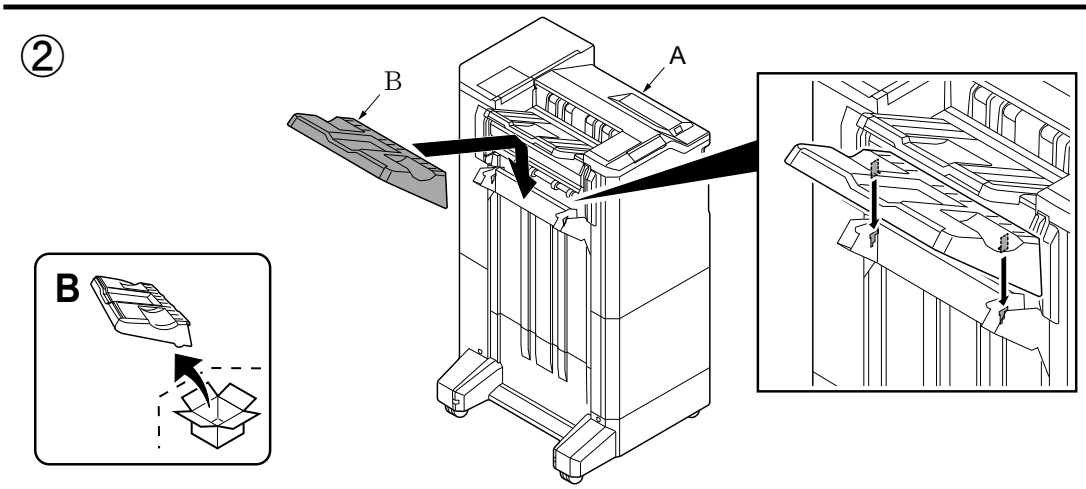

---

③

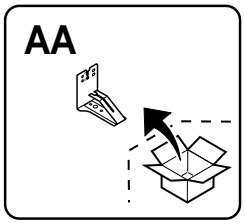

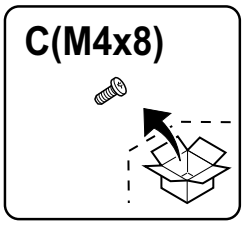

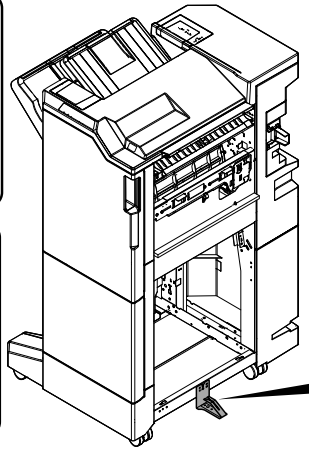

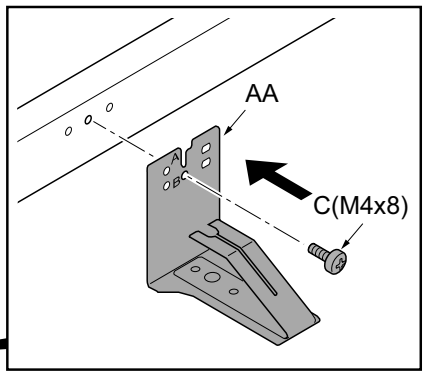

④

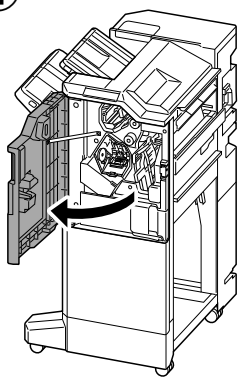

⑤

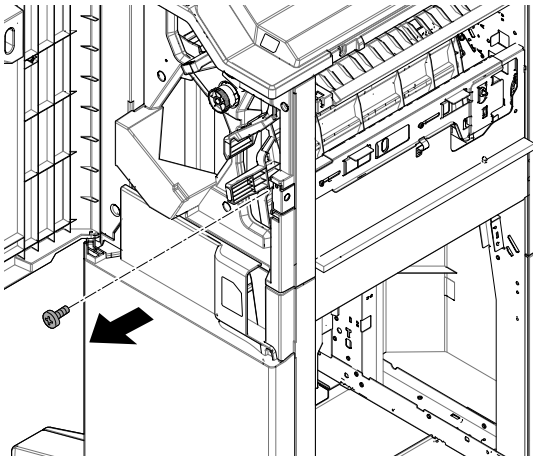

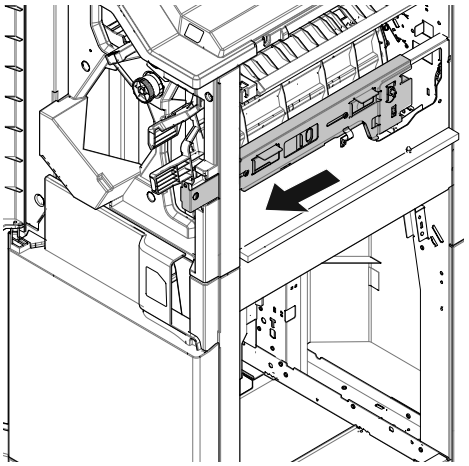

⑥

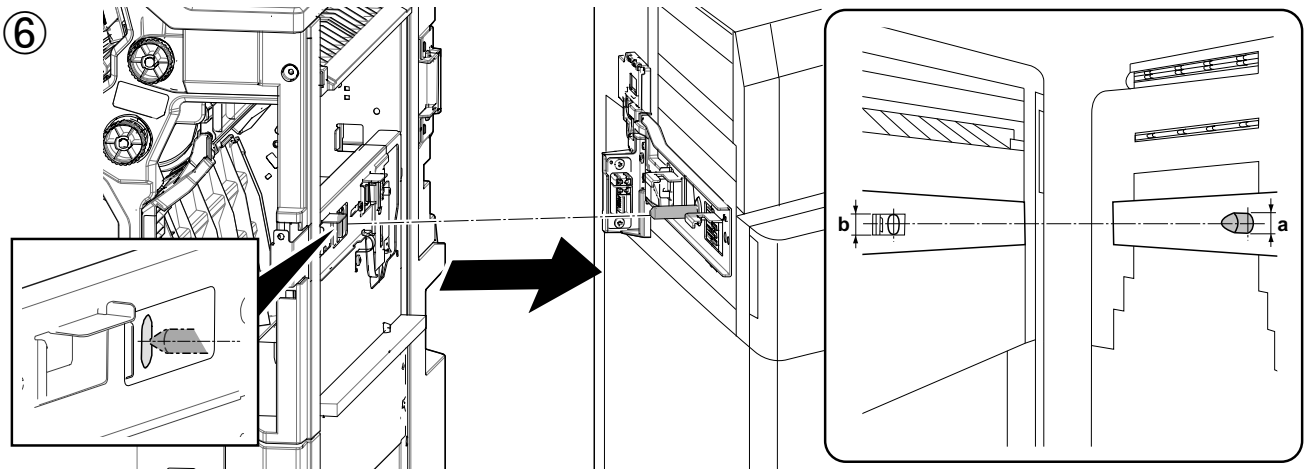

OK➡⑳ **NG➡⑦** **NG➡⑦**

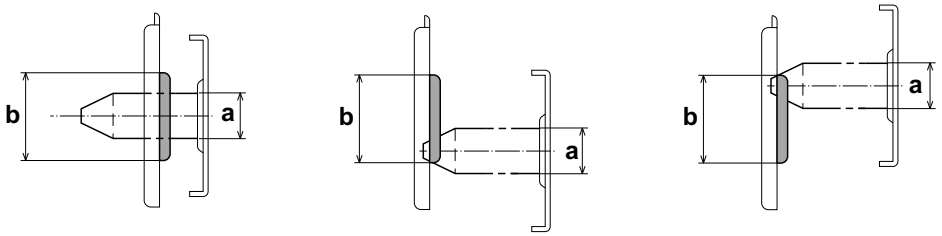

⑦

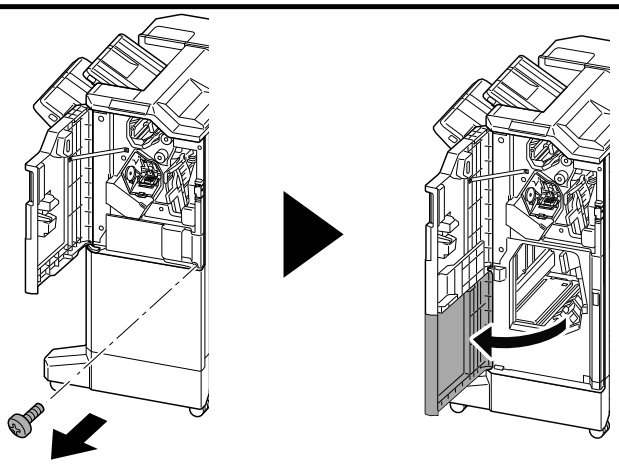

⑧

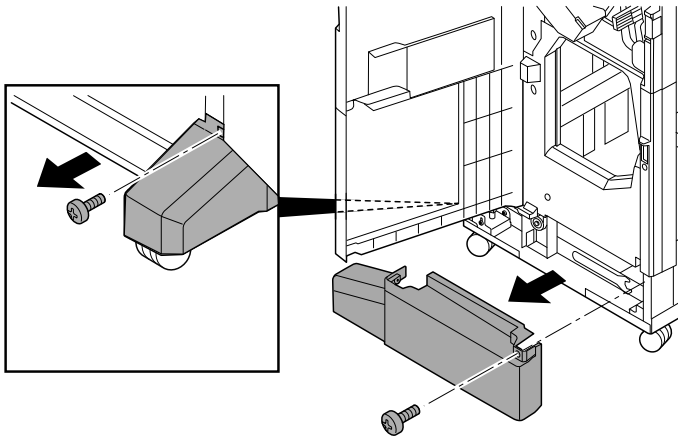

⑨

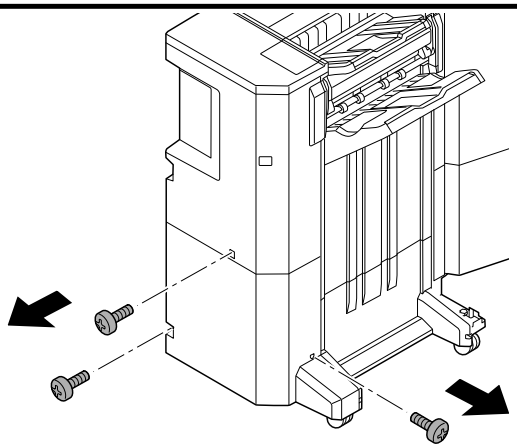

⑩

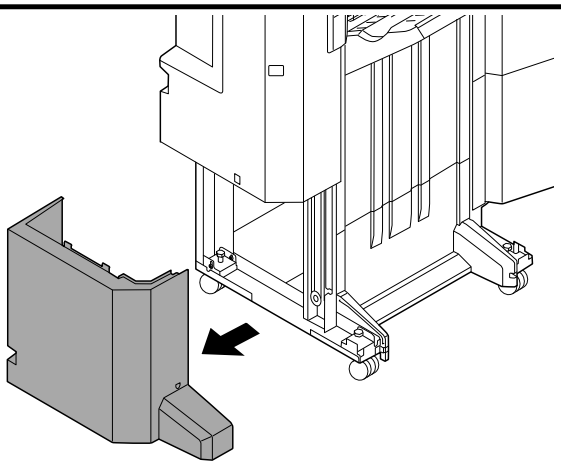

⑪

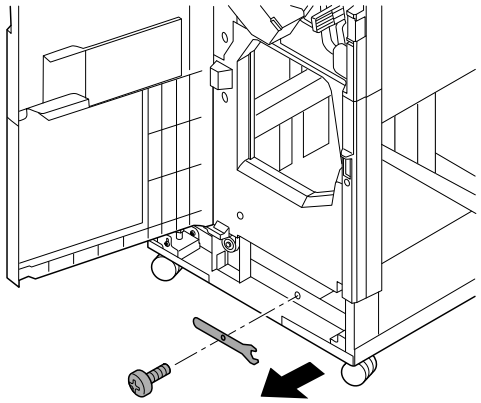

⑫

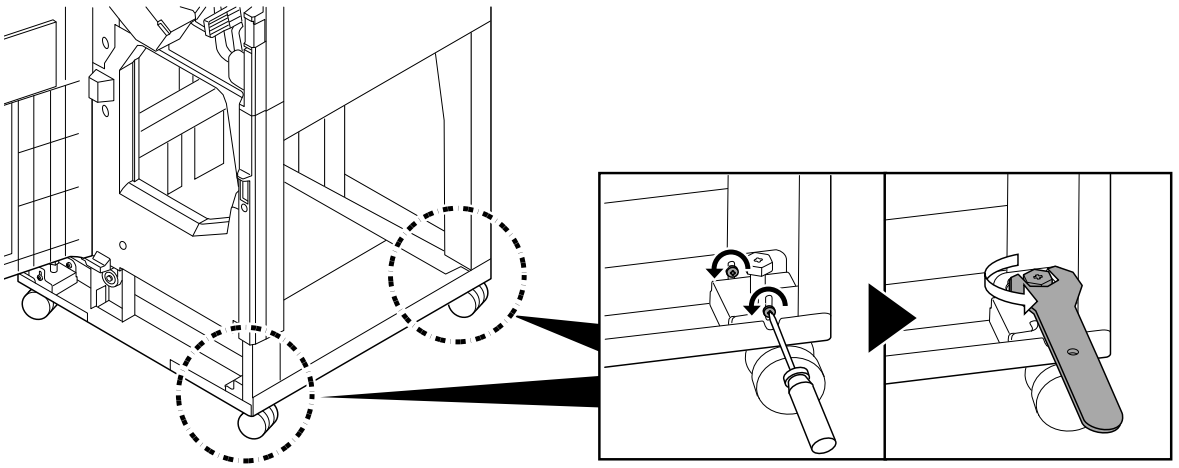

⑬

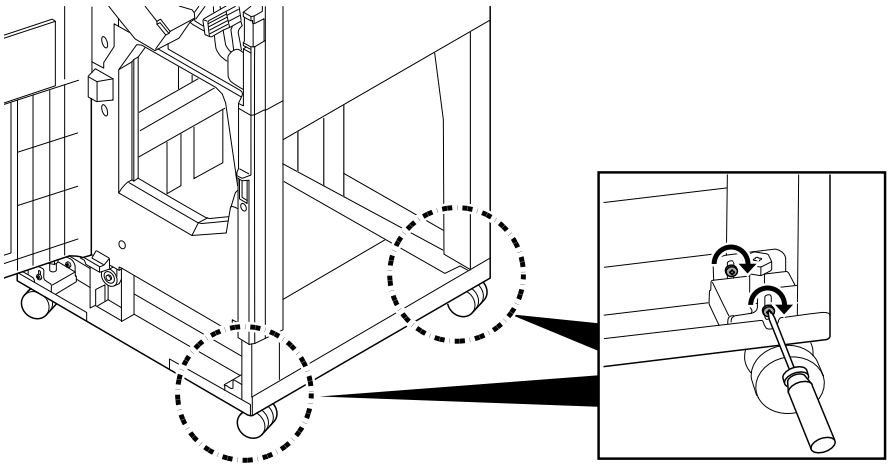

⑭

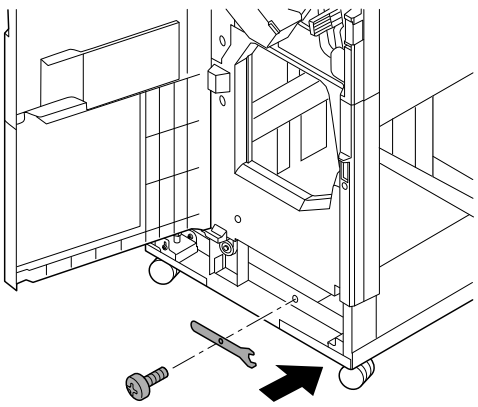

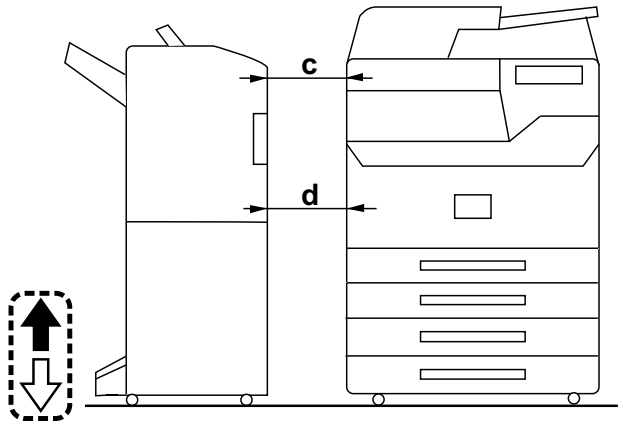

c = d ➡ ⑰

c > d , c < d ➡ ⑮

⑮

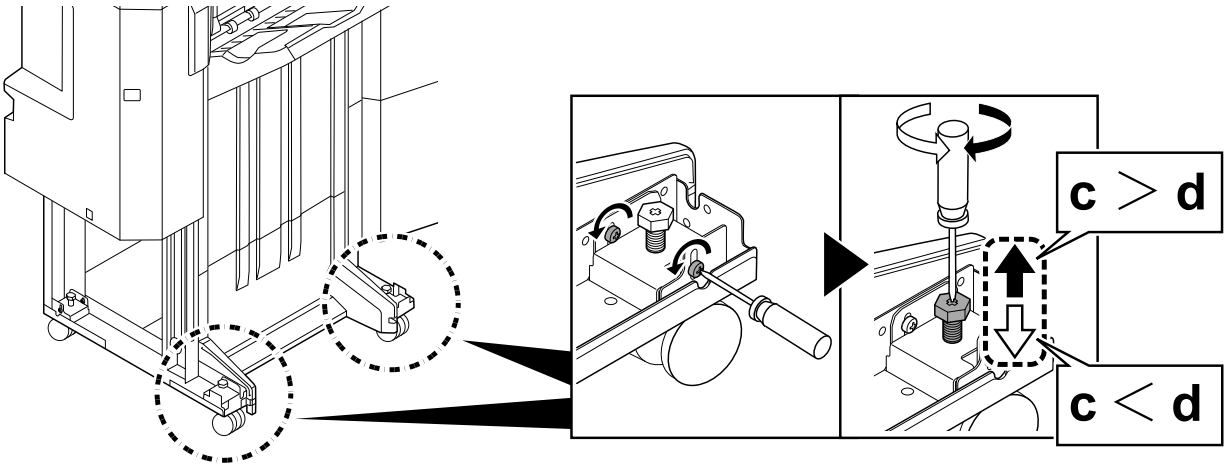

⑯

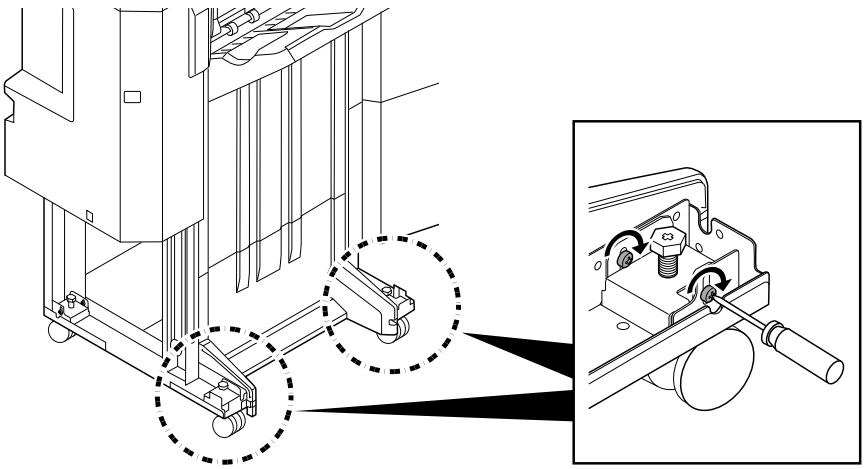

⑰

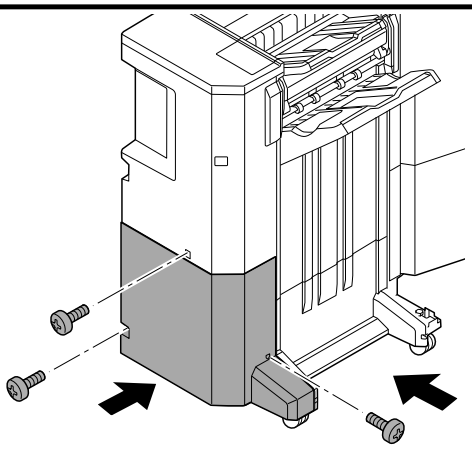

⑱

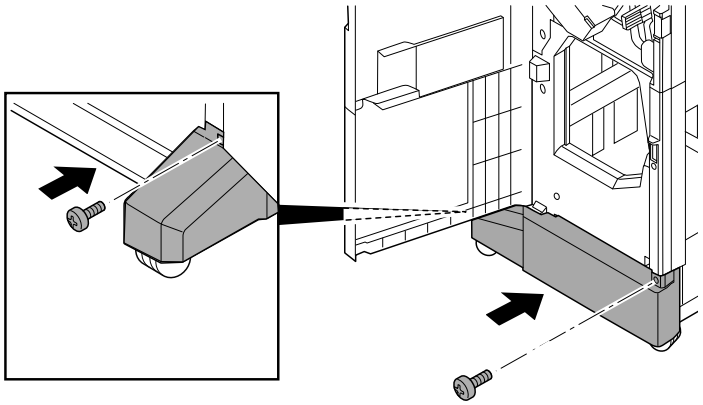

⑲

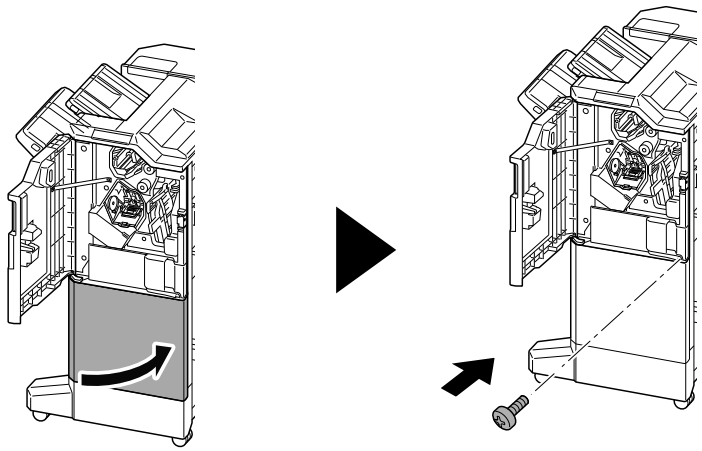

⑳

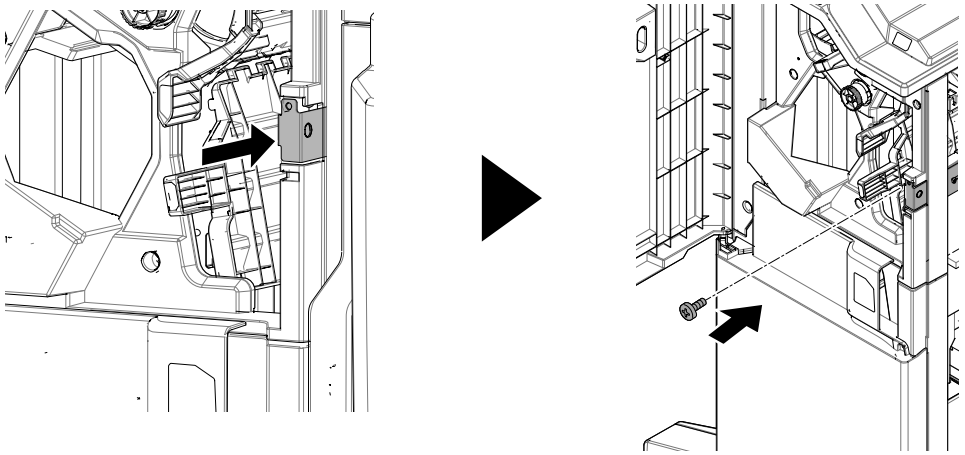

㉑

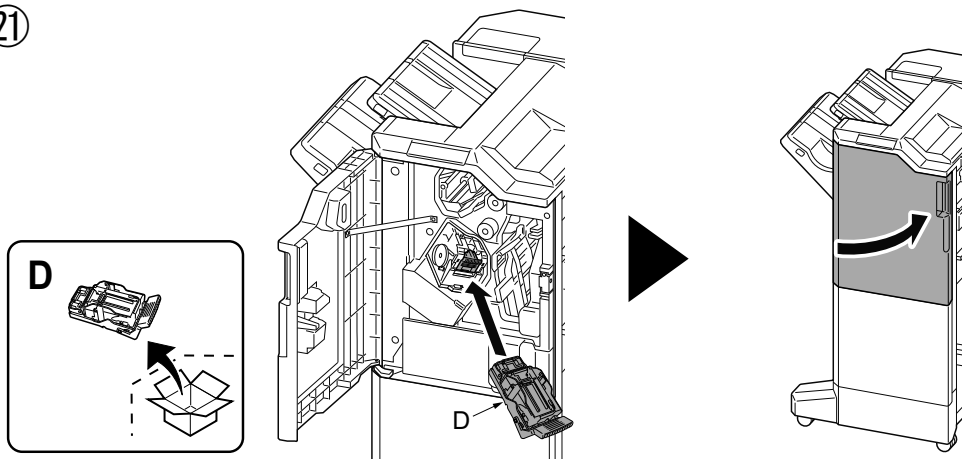

㉒

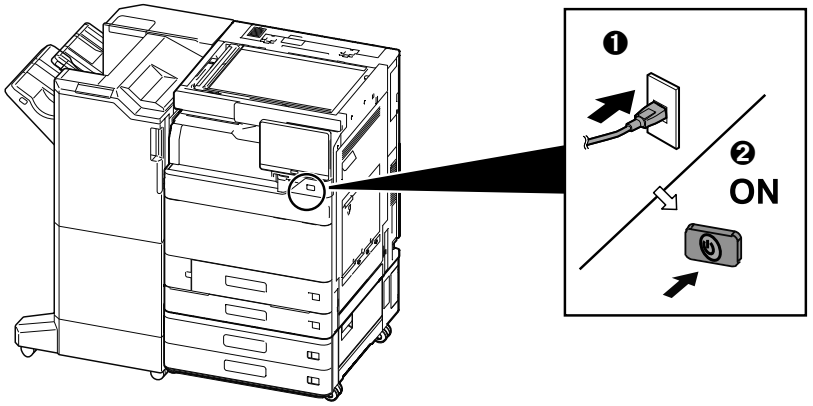

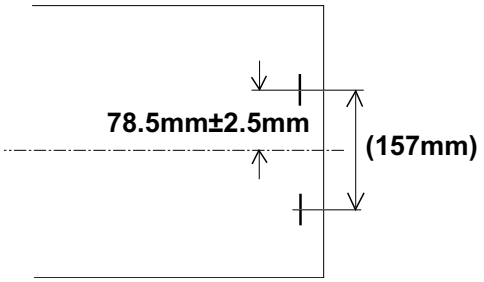

(EN) Adjusting the stapling position

1. Connect the machine power plug to the wall outlet and turn the machine main power switch on.
2. Make a test copy using staple mode (double stapled).
3. Check whether the stapling position is off-center.If the staple position is off-center, follow the procedure below to adjust the position.
<Reference value> 78.5 mm ± 2.5 mm from the center of the paper

---

(FR) Ajustement de la position d'agrafage

1. Insérer la fiche d'alimentation de la machine dans la prise murale et mettre la machine sous tension.
2. Procéder à une copie d'essai en mode agrafage (double agrafage).
3. Vérifier que la position d'agrafage n'est pas en décalage. Si la position d'agrafage est décalée, la régler en procédant de la manière suivante.
<Valeur de référence> 78,5 mm ± 2,5 mm depuis le milieu de la feuille de papier

---

(ES) Ajuste de la posición de grapado

1. Conecte el enchufe de la máquina al receptáculo de pared y encienda el interruptor principal de la máquina.
2. Haga una copia de prueba en el modo de grapado (grapado doble).
3. Compruebe si la posición de grapado está descentrada. Si la posición de grapado está descentrada, realice el siguiente procedimiento para ajustar la posición.
<Valor de referencia> 78,5 mm ± 2,5 mm del centro del papel

(DE) Justage der Heftposition

1. Stecken Sie den Netzstecker des Geräts in die Wandsteckdose und schalten Sie das Gerät am Gauptschalter ein.
2. Erstellen Sie eine Probekopie im Heftmodus (doppelt geheftet).
3. Prüfen Sie, ob die Heftposition außermittig ist. Falls die Heftposition außermittig ist, müssen Sie sie wie folgend einstellen.
<Bezugswert> 78,5 mm ± 2,5 mm von der Blattmitte

(IT) Regolazione della posizione di pinzatura

1. Collegare la spina alla presa di corrente a muro e accendere l'interruttore di alimentazione della macchina.
2. Eseguire una copia di prova utilizzando la modalità di spillatura con punti metallici (spillatura doppia).
3. Verificare che la posizione di spillatura non sia fuori centro. Se la posizione di spillatura è fuori centro, seguire la procedura riportata sotto per regolare la posizione.
<Valore di riferimento> 78,5 mm ± 2,5 mm dal centro del foglio

---

(ZHCN) 调节装订位置

1. 将机器上的电源插头插入电源插座中，打开主电源开关。
2. 在装订模式（2 点固定）下进行测试复印。
3. 确认装订位置的中心偏差。 装订位置偏离中心时，按以下步骤进行调节。
＜基准值＞ 距离纸张中心 78.5㎜±2.5㎜

(KO) 스테이플 위치 조정

1. 본체 전원플러그를 콘센트에 꽂고 주 전원 스위치를 ON 으로 합니다 .
2. 스테이플 모드 (2 곳) 에서 시험복사를 합니다 .
3. 스테이플 위치의 센터 어긋남을 확인합니다 . 스테이플 위치가 중심에서 벗어난 경우 , 다음 순서로 조정을 합니다 .
＜기준치＞ 용지 센터에서 78.5mm±2.5mm

(JA) ステープル位置の調整

1. 機械本体の電源プラグをコンセントに差し込み、主電源スイッチを ON にする。
2. ステープルモード(2 箇所止め)でテストコピーを行う。
3. ステープル位置のセンターずれを確認する。ステープル位置が中心からずれていた場合、次の手順で調整を行う。
＜基準値＞ 用紙センターより 78.5㎜±2.5㎜

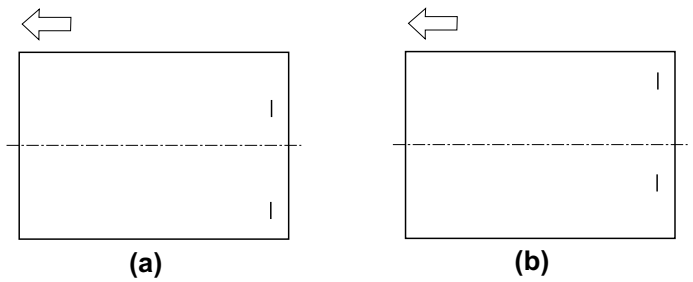

4. Set the maintenance mode U246 and select [Finisher] > [Staple HP].
5. Adjust the values.
If the paper is stapled too close to the front of the machine (a): Increase the setting value.
If the paper is stapled too close to the rear of the machine (b): Decrease the setting value.
Amount of change per step: 0.1 mm
6. Press the [Start] key to confirm the setting value.
7. Perform a test copy.
8. Repeat steps 4 to 7 until the staple position is within the reference value.
<Reference value> 78.5 mm ± 2.5 mm from the center of the paper

---

4. Passez en mode maintenance U246 et sélectionnez [Finisher] > [Staple HP].
5. Régler les valeurs.
Si le papier est agrafé trop près de l'avant de la machine (a): augmenter la valeur de réglage.
Si le papier est agrafé trop près de l'arrière de la machine (b): réduire la valeur de réglage.
Changement par graduation d'échelle : 0,1 mm
6. Appuyer sur la touche de [Départ] pour confirmer la valeur de réglage.
7. Effectuer une copie de test.
8. Recommencer les étapes 4 à 7 jusqu'à ce que la position d'agrafe soit conforme à la valeur de référence.
<Valeur de référence> 78,5 mm ± 2,5 mm depuis le milieu de la feuille de papier

---

4. Configure el modo de mantenimiento U246 y seleccione [Finisher] > [Staple HP].
5. Ajuste los valores.
Si el grapado del papel se encuentra demasiado cerca del frente de la máquina (a): aumente el valor de configuración.
Si el grapado del papel se encuentra demasiado cerca de la parte posterior de la máquina (b): disminuya el valor de configuración.
Magnitud del cambio por incremento: 0,1 mm
6. Pulse la tecla de [Inicio] para confirmar el valor de configuración.
7. Haga una copia de prueba.
8. Repita los pasos 4 a 7 hasta que la posición de grapado se encuentre dentro del valor de referencia.
<Valor de referencia> 78,5 mm ± 2,5 mm del centro del papel

---

4. Aktivieren Sie den Wartungsmodus U246 und wählen Sie [Finisher] > [Staple HP].
5. Die Werte einstellen.
Falls das Papier zu nahe am vorderen Rand des Geräts (a) abgestapelt wird: Vergrößern Sie den Stellwert.
Falls das Papier zu nahe am hinteren Rand des Geräts (b) abgestapelt wird: Verkleinern Sie den Stellwert.
Änderung pro Schritt: 0,1 mm
6. Den Einstellwert durch Drücken der [Start]-Taste bestätigen.
7. Eine Testkopie erstellen.
8. Wiederholen Sie die Schritte 4 bis 7, bis die Heftposition im Bereich des Bezugswerts liegt.
<Bezugswert> 78,5 mm ± 2,5 mm von der Blattmitte

---

4. Impostare la modalità manutenzione U246, quindi selezionare [Finisher] > [Staple HP].
5. Regolare i valori.
Se il foglio viene spillato troppo vicino alla parte anteriore della macchina (a): Aumentare il valore di impostazione.
Se il foglio viene spillato troppo vicino alla parte posteriore della macchina (b): Diminuire il valore di impostazione.
Entità modifica per passo: 0,1 mm
6. Premere il tasto di [Avvio] per confermare il valore dell'impostazione.
7. Eseguire una copia di prova.
8. Ripetere i passi 4 to 7 finché la posizione di spillatura risulta all'interno del valore di riferimento.
<Valore di riferimento> 78,5 mm ± 2,5 mm dal centro del foglio

---

4. 进入维修保养模式 U246，把 [Finisher]>[Staple HP] 。
5. 调整设定值。
装订位置向机器前部偏移时 (a) ：调高设定值。
装订位置向机器后部偏移时 (b) ：调低设定值。
设定值的一个调整单位变化量：0.1mm
6. 按 [开始] 键，以确定设定值。
7. 进行测试复印。
8. 重复步骤 4 ～ 7，直到装订位置在基准范围内为止。
＜基准值＞ 距离纸张中心 78.5mm±2.5mm

---

4. 메인터넌스 모드 U246 을 설정하고 [Finisher] > [Staple HP] 를 선택합니다 .
5. 설정치를 조정합니다 .
스테이플 위치가 기기앞측으로 벗어난 경우 (a):설정치를 높입니다 .
스테이플 위치가 기기뒷측으로 벗어난 경우 (b):설정치를 낮춥니다 .
1 스텝당 변화량:0.1mm
6. [복사 / 시작] 키를 누르고 설정치를 확인합니다 .
7. 시험복사를 합니다 .
8. 스테이플 위치가 기준치내가 될 때까지 순서 4 ~ 7 을 반복합니다 .
＜기준치＞ 용지 센터에서 78.5mm±2.5mm

---

4. メンテナンスモード U246 をセットし、[Finisher] > [Staple HP] を選択する。
5. 設定値を調整する。
ステープル位置が機械前側にずれている場合 (a):設定値を上げる。
ステープル位置が機械後側にずれている場合 (b):設定値を下げる。
1 ステップ当たりの変化量:0.1mm
6. [スタート] キーを押し、設定値を確定する。
7. テストコピーを行う。
8. ステープル位置が基準値内になるまで、手順 4 ～ 7 を繰り返す。
＜基準値＞ 用紙センターより 78.5mm±2.5mm



2020. 2
303V85671001

DF-7150

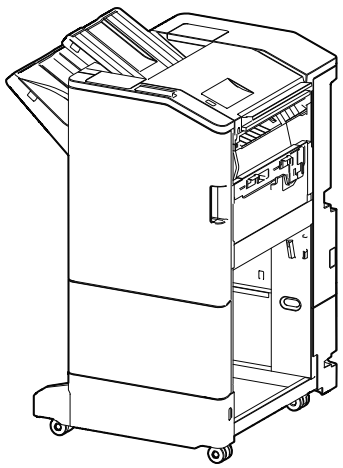

INSTALLATION GUIDE

GUIDE D'INSTALLATION

GUÍA DE INSTALACION

INSTALLATIONSANLEITUNG

GUIDA ALL'INSTALLAZIONE

安装手册

설치안내서

設置手順書

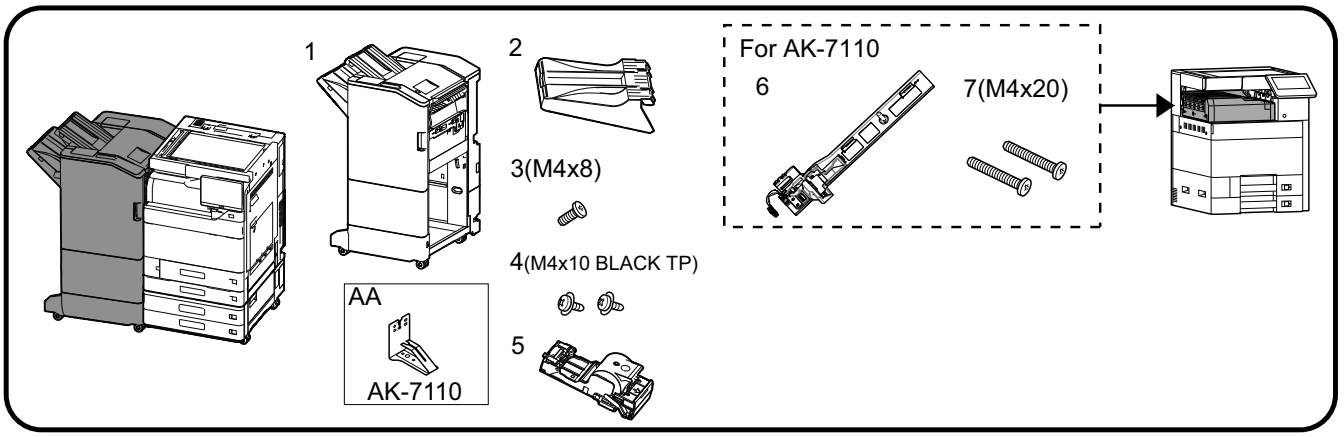

(EN) Be sure to remove any tape and/or cushioning materials from the parts supplied.

(FR) Veillez à retirer les morceaux de bande adhésive et/ou les matériaux de rembourrage des pièces fournies.

(ES) Asegúrese de quitar todas las cintas y/o material amortiguador de las partes suministradas.

(DE) Stellen Sie sicher, dass sämtliche Klebebänder und/oder Polstermaterial von den gelieferten Teilen entfernt wurden.

(IT) Rimuovere tutti i nastri adesivi e/o i materiali di protezione dalle parti fornite.

(ZHCN) 如果附属品上带有固定胶带、缓冲材料时，请务必揭下。

(KO) 동봉품에 고정 테이프 , 완충재가 붙어 있는 경우에는 반드시 제거하십시오.

(JA) 同梱品に固定テープ、緩衝材がついている場合は、必ず取り外すこと。

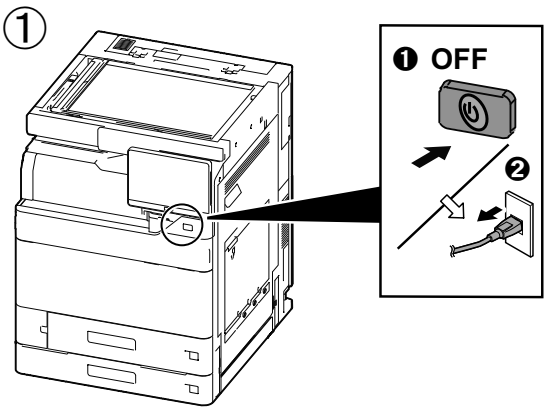

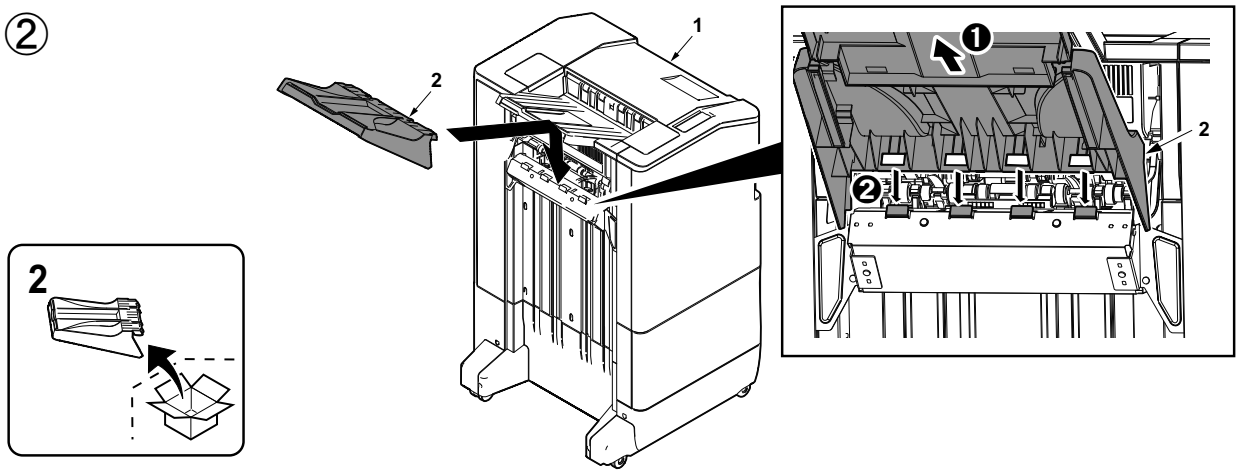

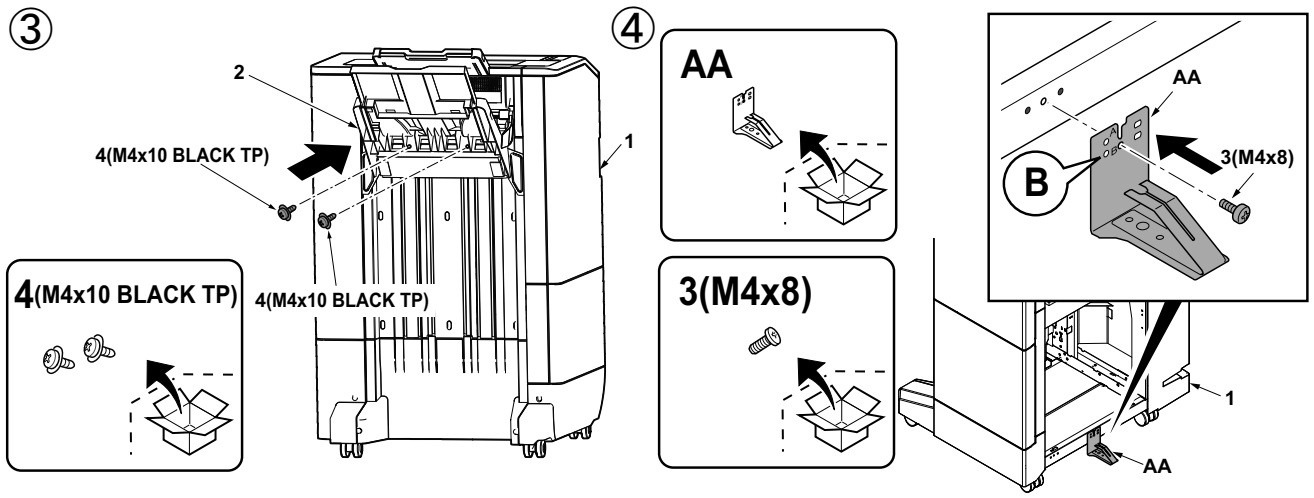

⑤

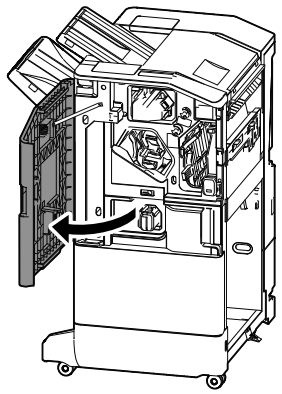

⑥

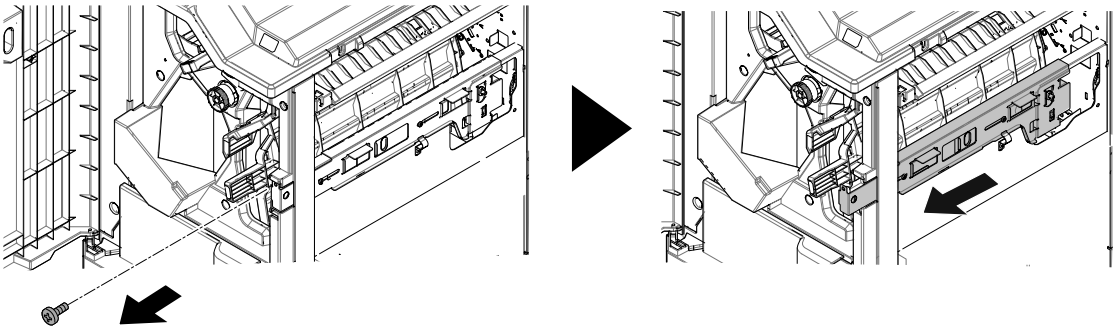

⑦

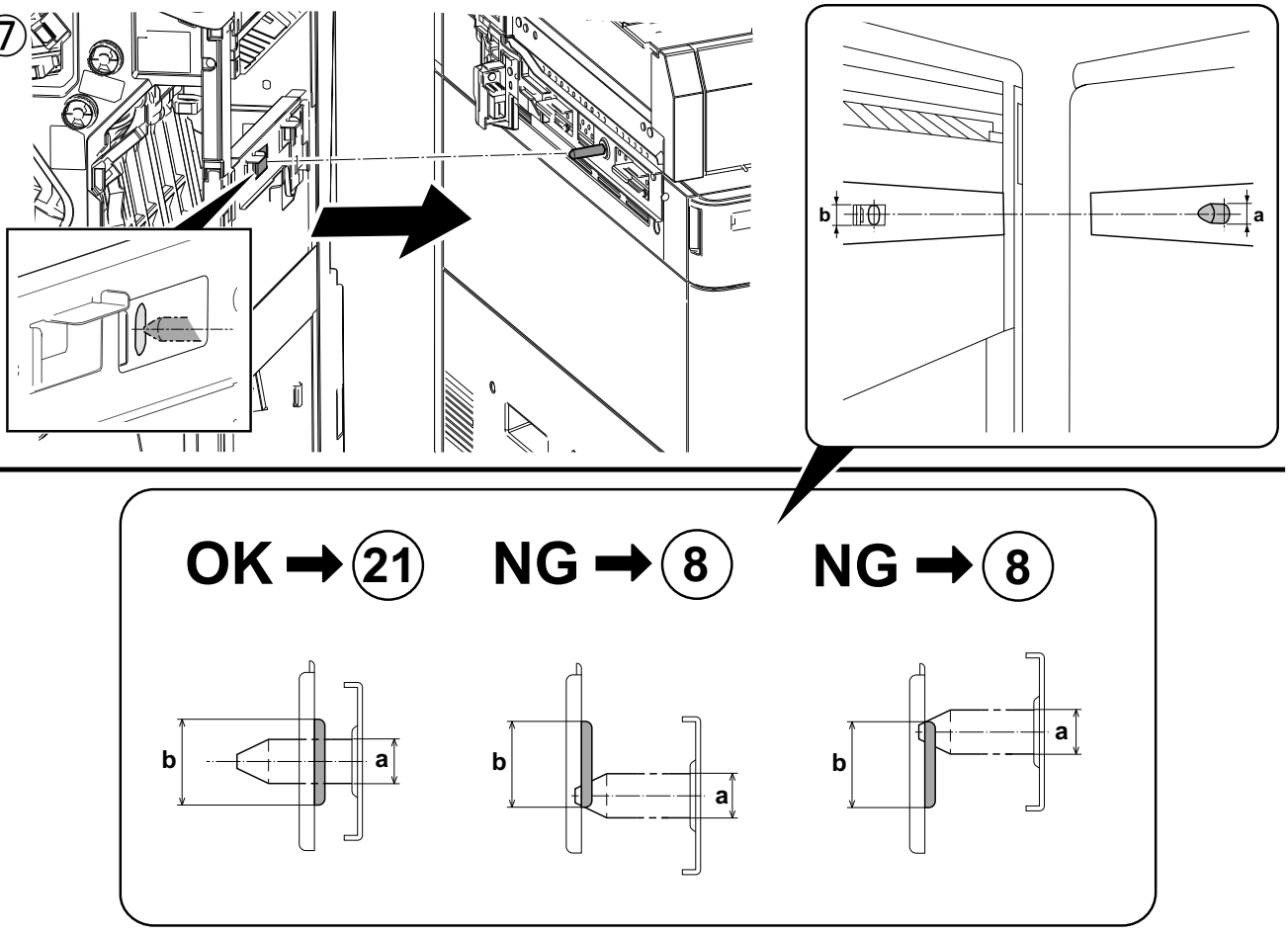

⑧

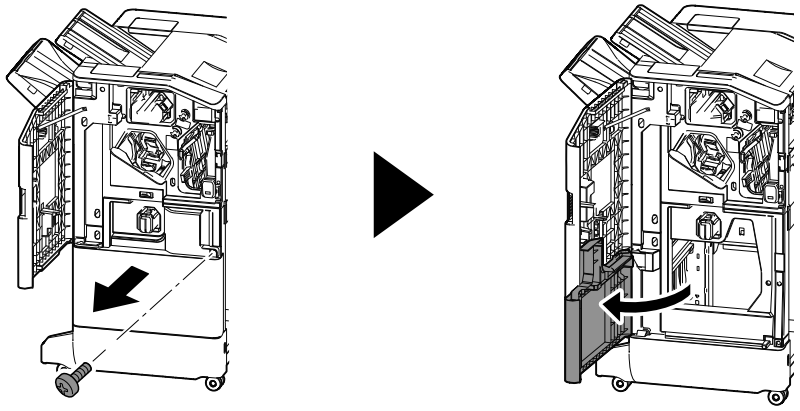

⑨

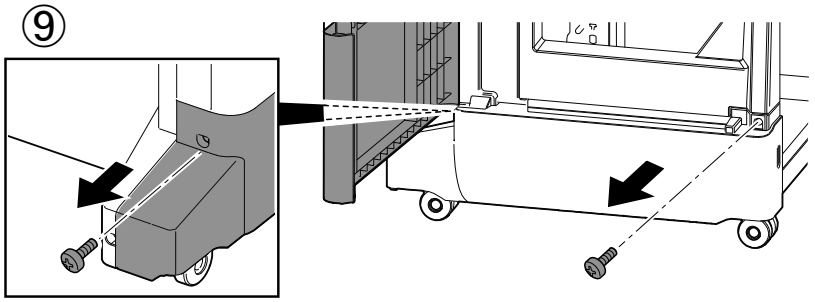

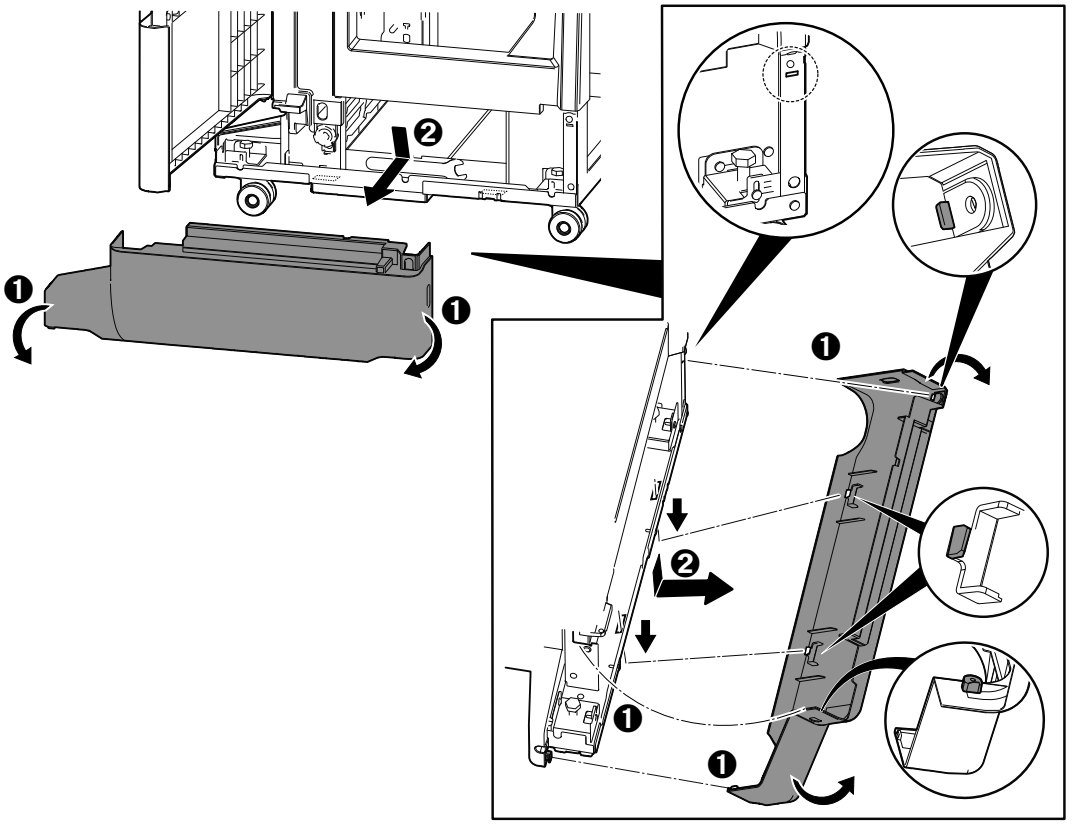

⑩

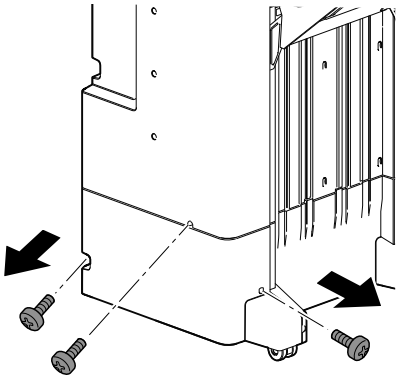

⑪

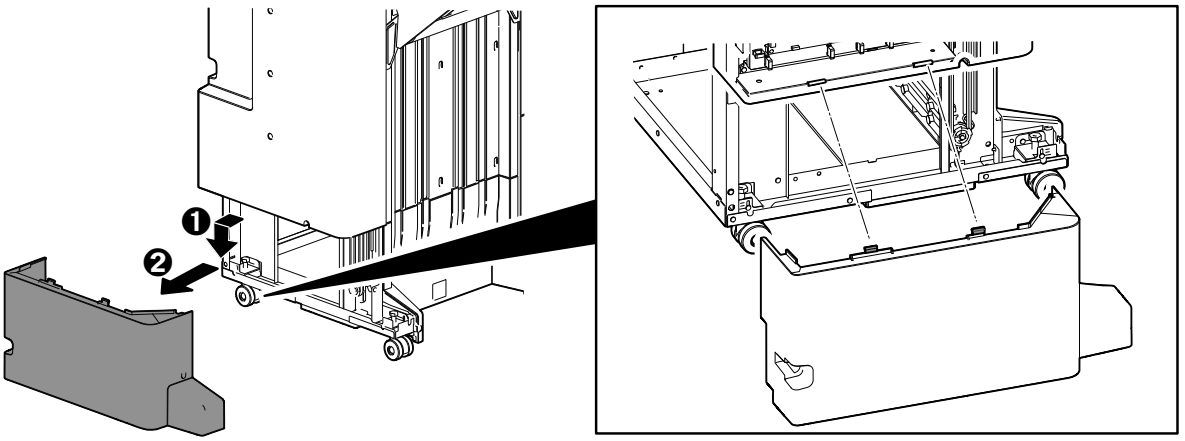

⑫

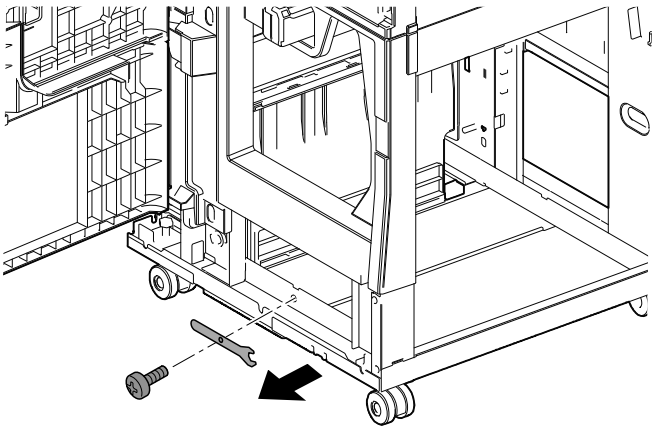

⑬

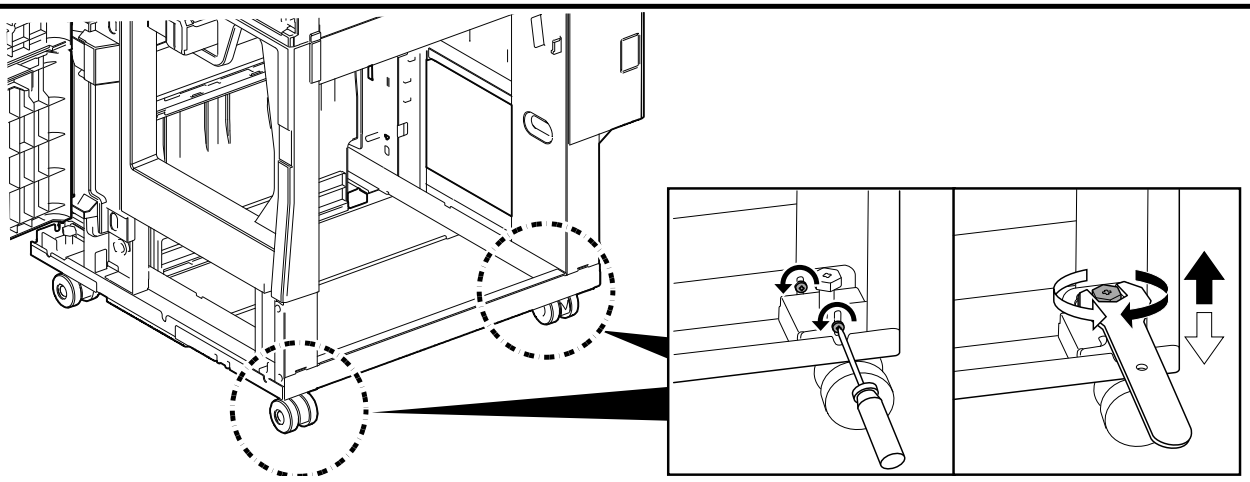

⑭

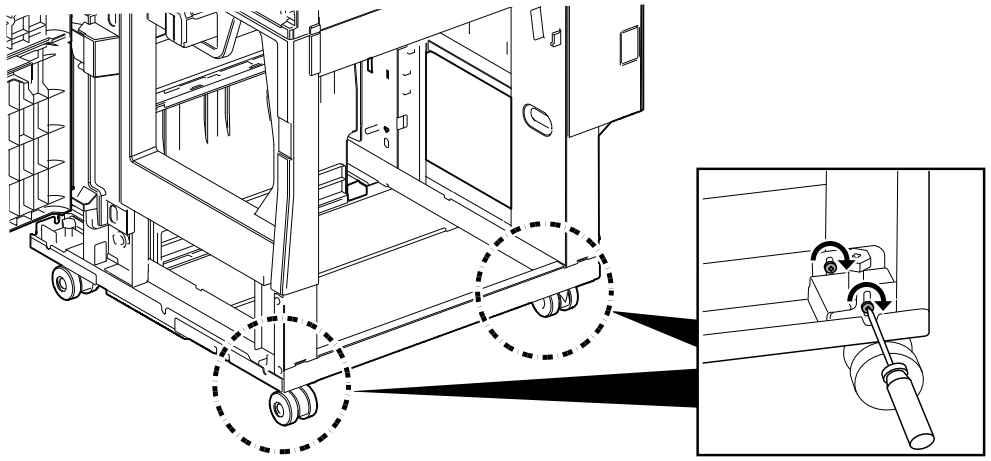

⑮

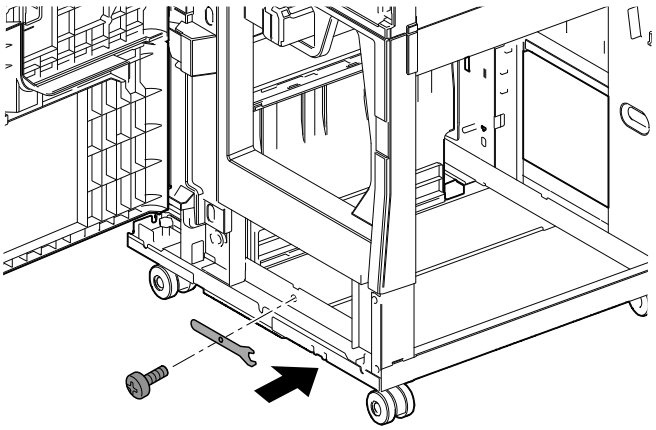

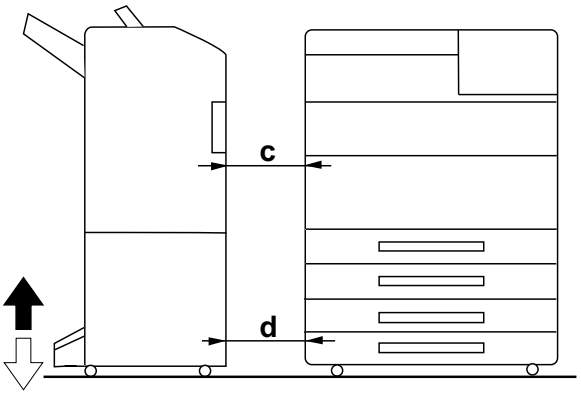

c = d ➡ ⑱

c > d , c < d ➡ ⑯

⑯

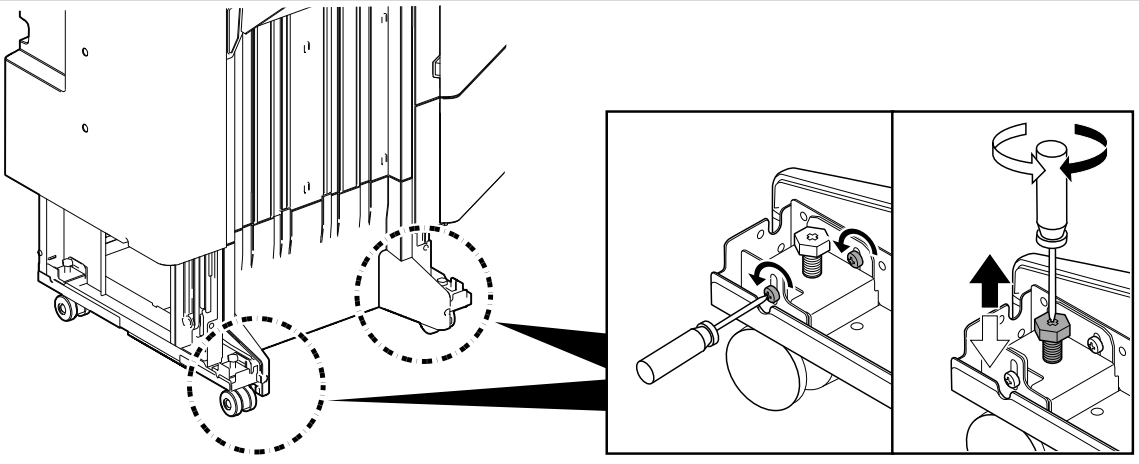

⑰

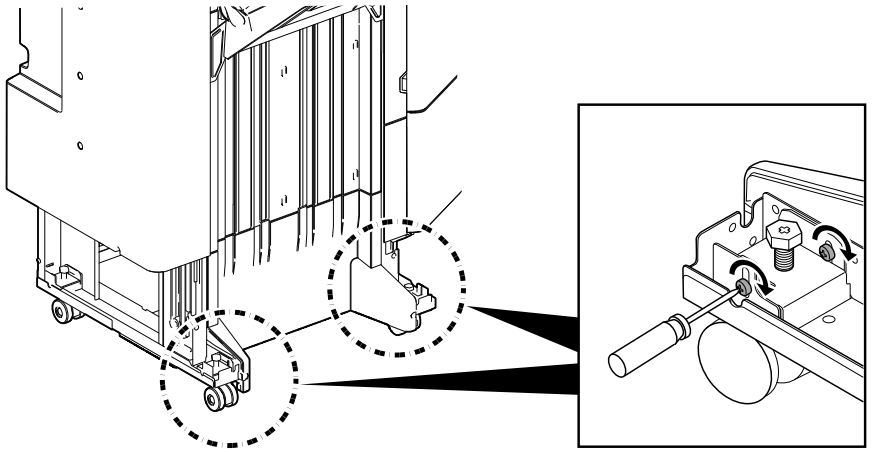

⑱

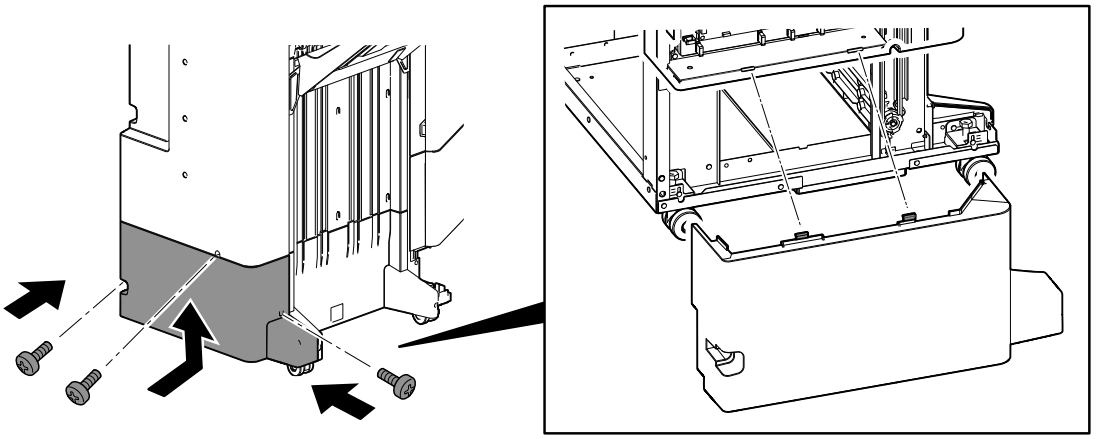

⑲

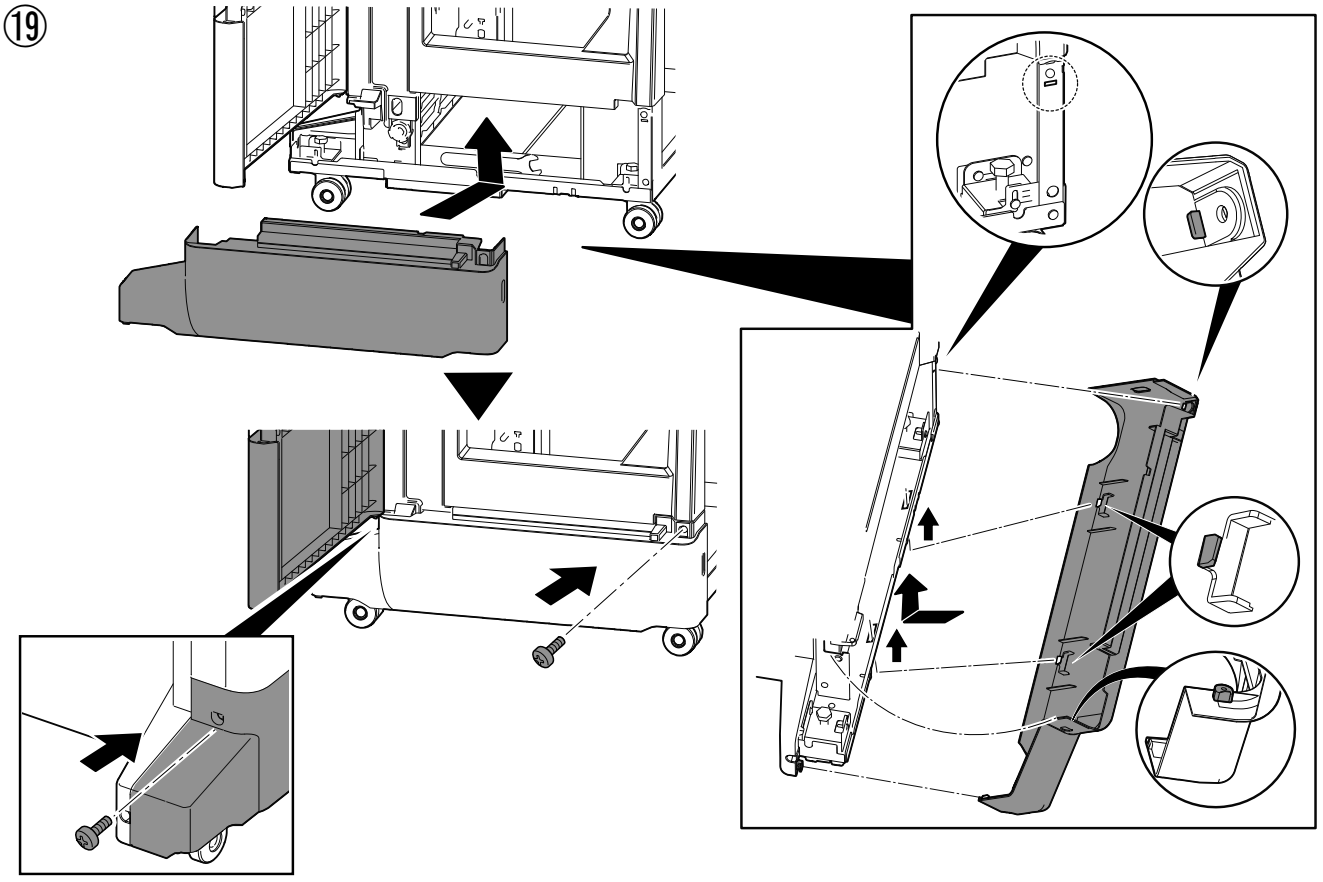

⑳

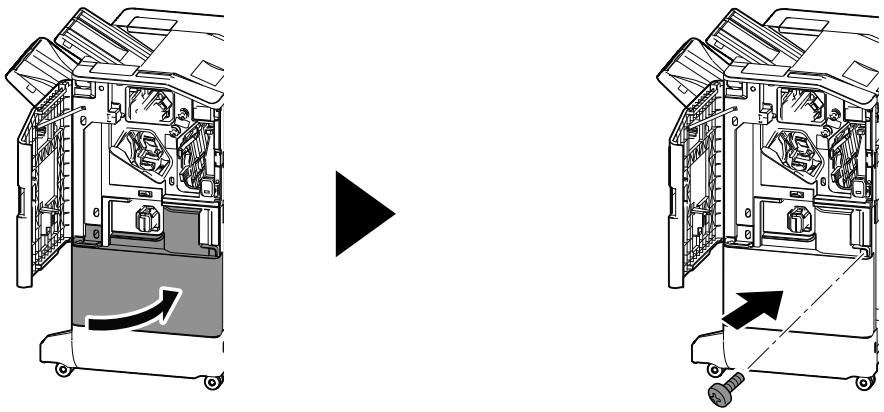

㉑

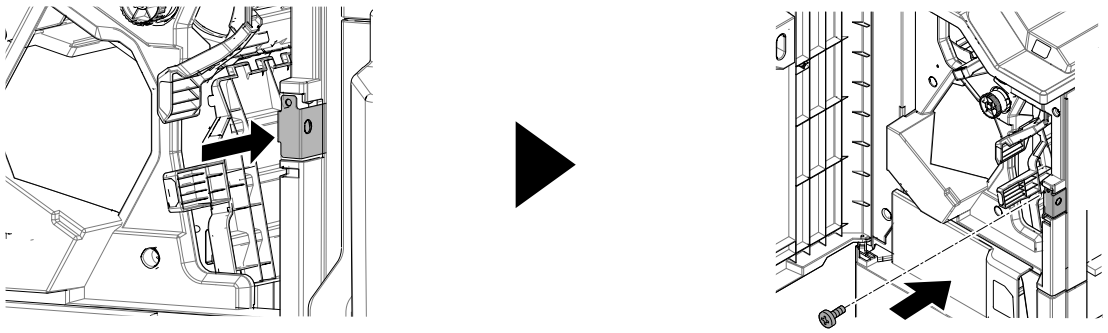

㉒

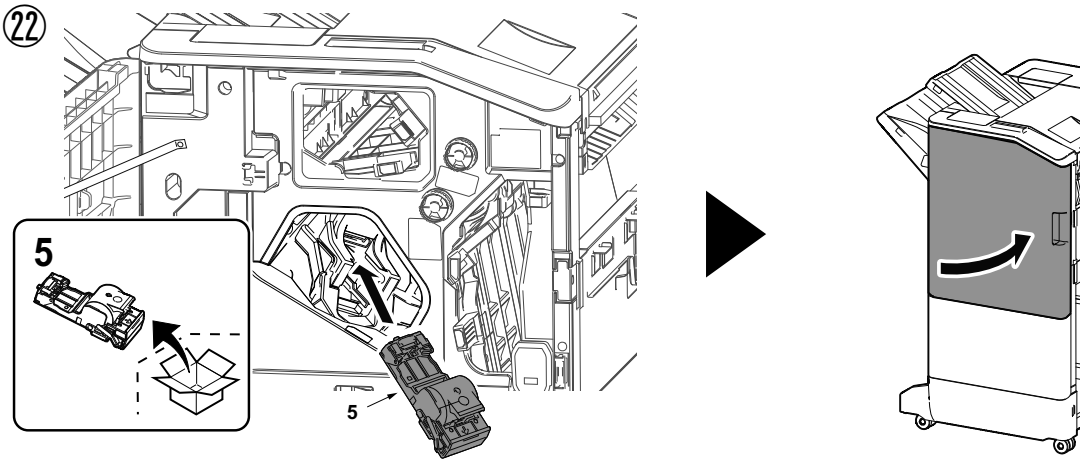

㉓

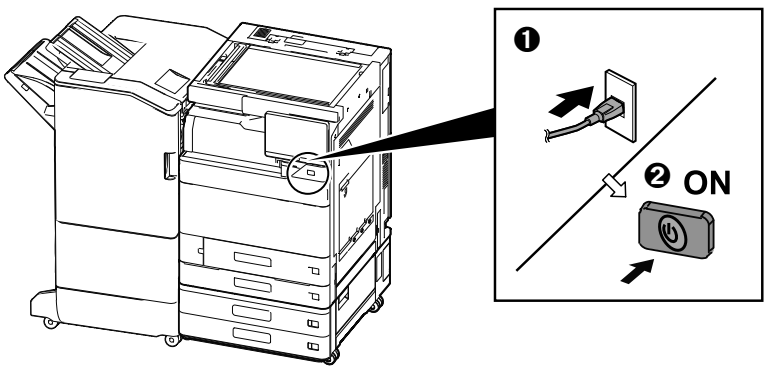



2020. 2
303V95671001

DP-7150

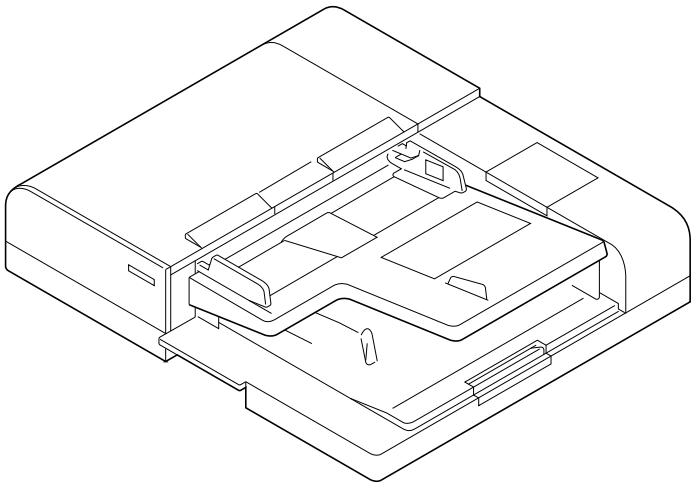

INSTALLATION GUIDE

GUIDE D'INSTALLATION

GUÍA DE INSTALACION

INSTALLATIONSANLEITUNG

GUIDA ALL'INSTALLAZIONE

安装手册

설치안내서

設置手順書

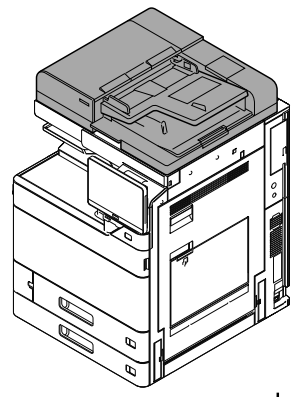

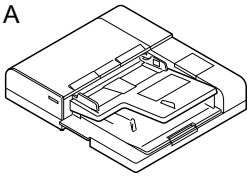



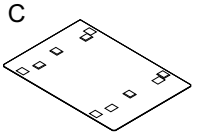

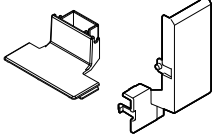

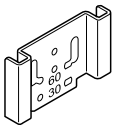



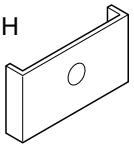



120V (North America / Latin America)

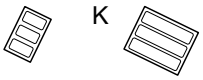

230V (Europe)

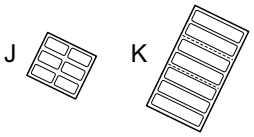

For Tiwan

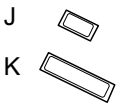

100V

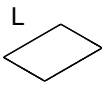

(EN) Be sure to remove any tape and/or cushioning materials from the parts supplied.
(FR) Veillez à retirer les morceaux de bande adhésive et/ou les matériaux de rembourrage des pièces fournies.
(ES) Asegúrese de quitar todas las cintas y/o material amortiguador de las partes suministradas.
(DE) Stellen Sie sicher, dass sämtliche Klebebänder und/oder Polstermaterial von den gelieferten Teilen entfernt wurden.
(IT) Rimuovere tutti i nastri adesivi e/o i materiali di protezione dalle parti fornite.
(ZHCN) 如果附属品上带有固定胶带，缓冲材料时务必揭下。
(KO) 동봉품에 고정 테이프，완충재가 붙어 있는 경우에는 반드시 제거하십시오.
(JA) 同梱品に固定テープ、緩衝材がついている場合は、必ず取り外すこと。

①

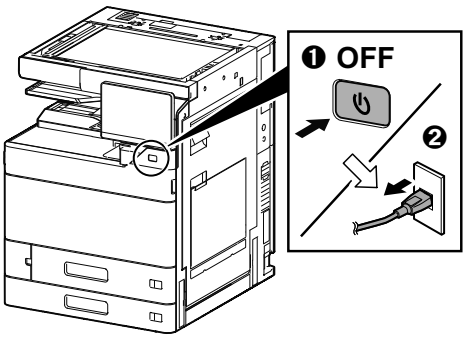

②

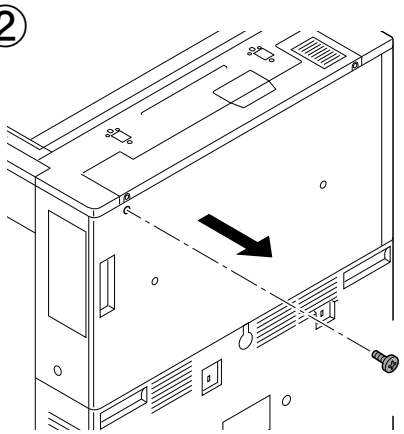

③

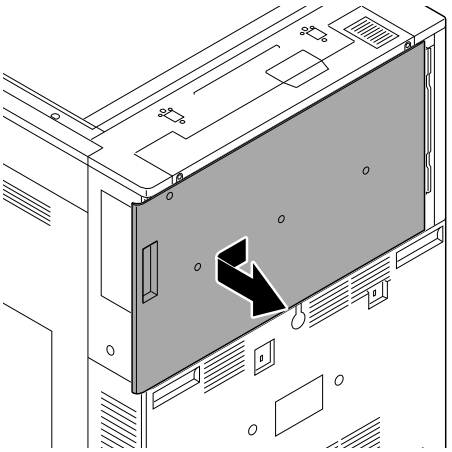

④

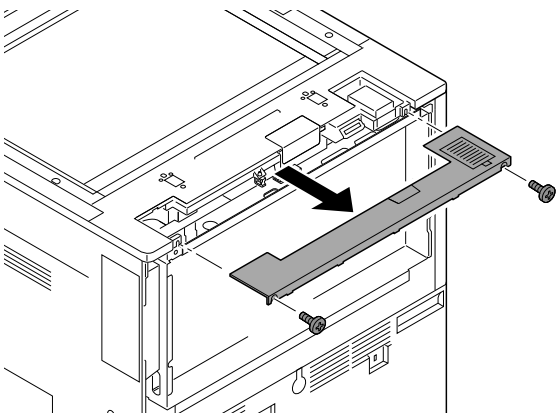

⑤

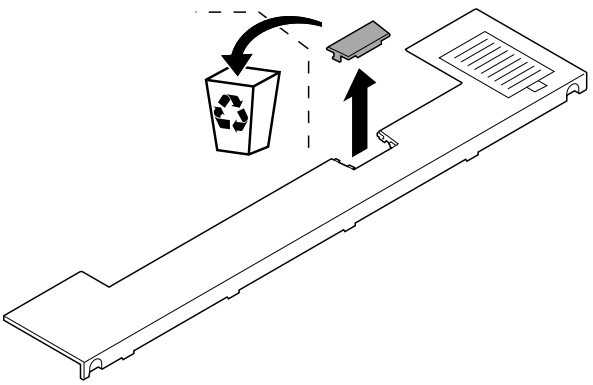

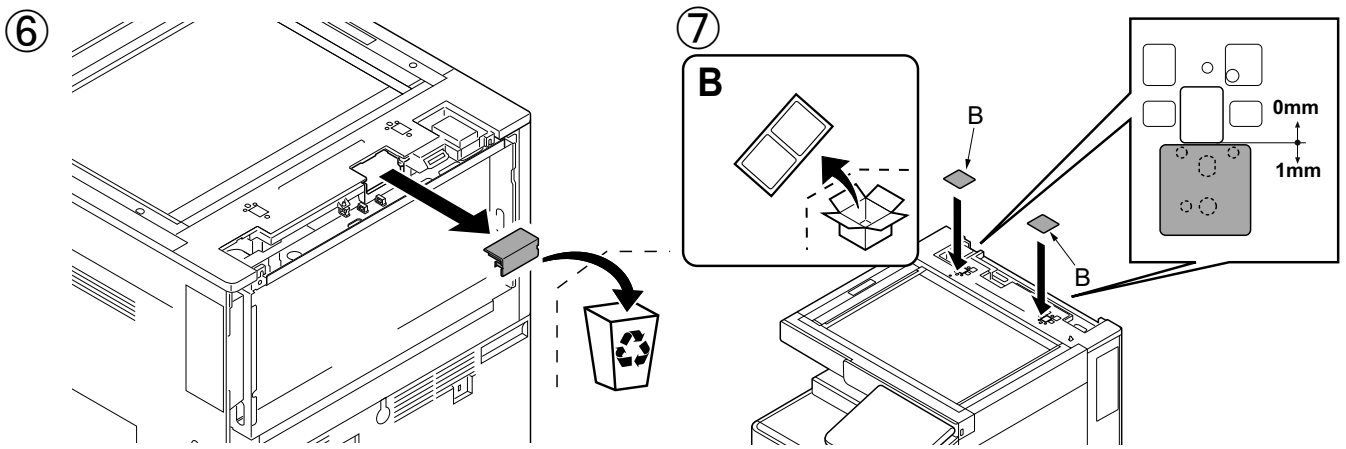
⑥
⑦
B
B
B
0mm
1mm

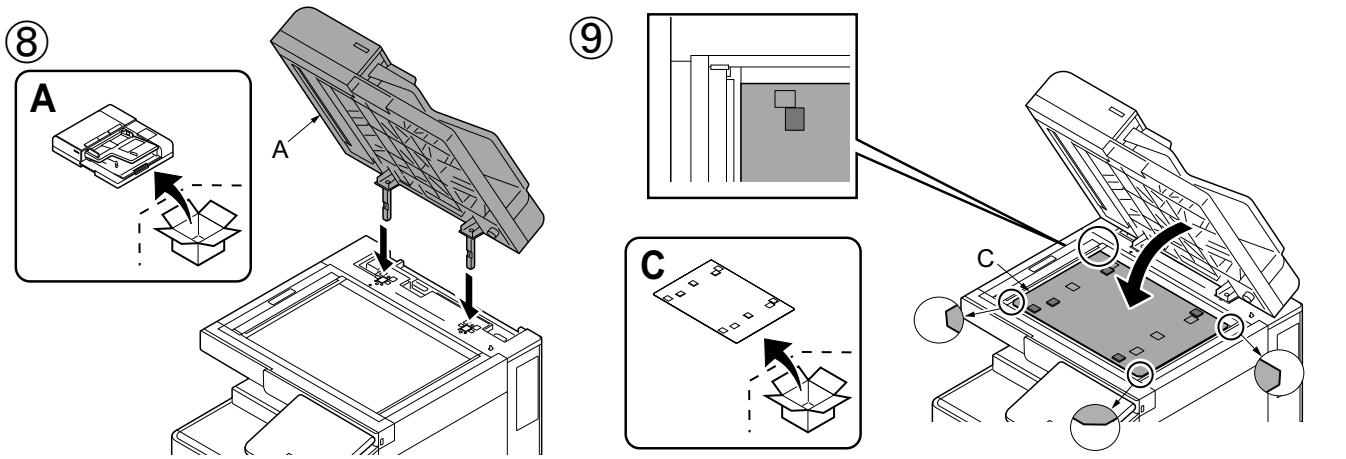
⑧
A
A
⑨
C
C

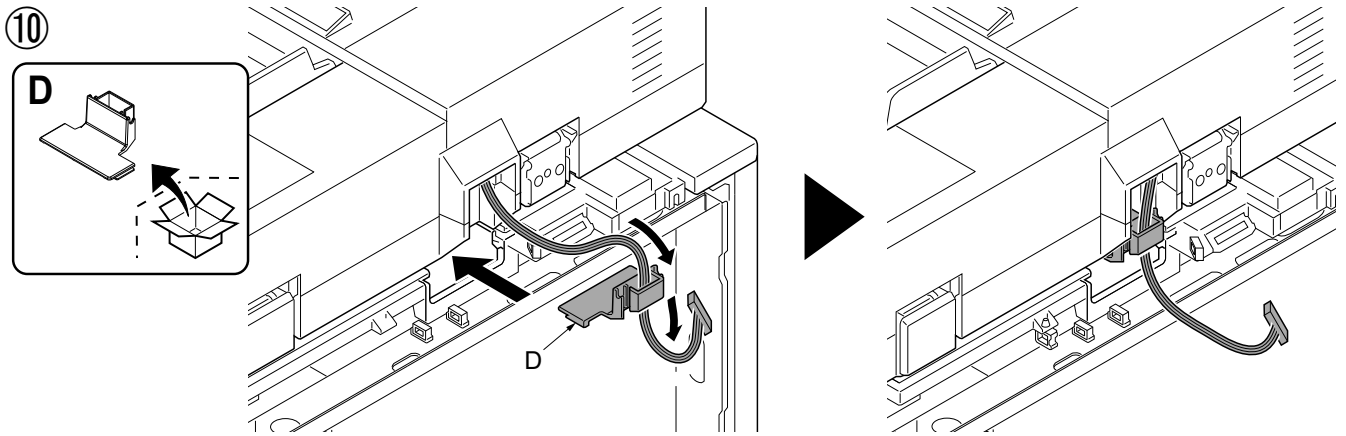
⑩
D
D

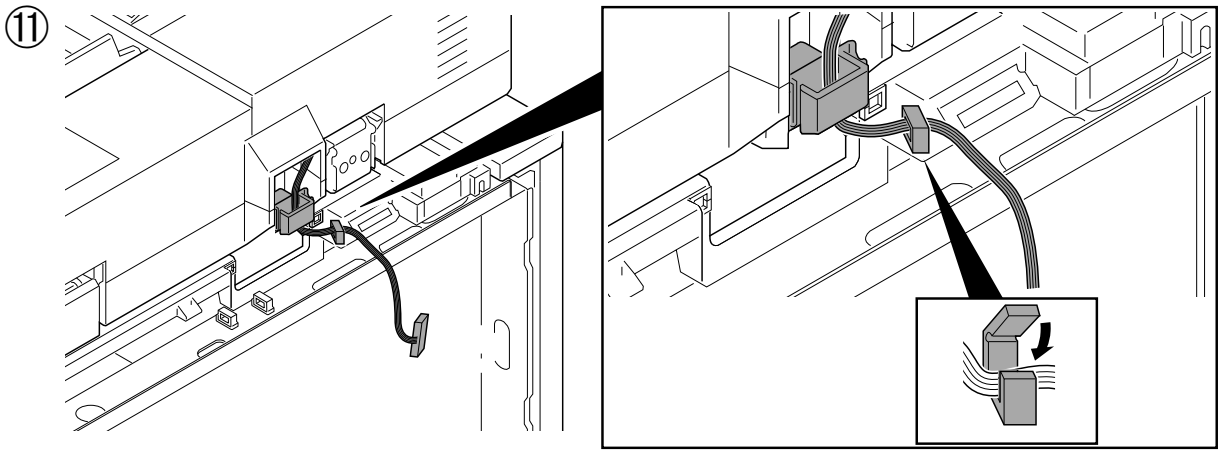
⑪

⑫

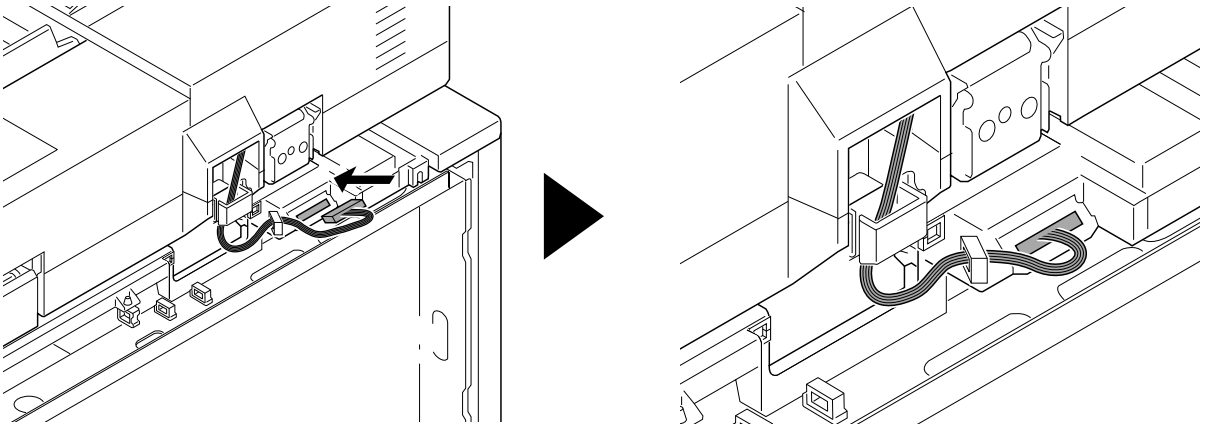

⑬

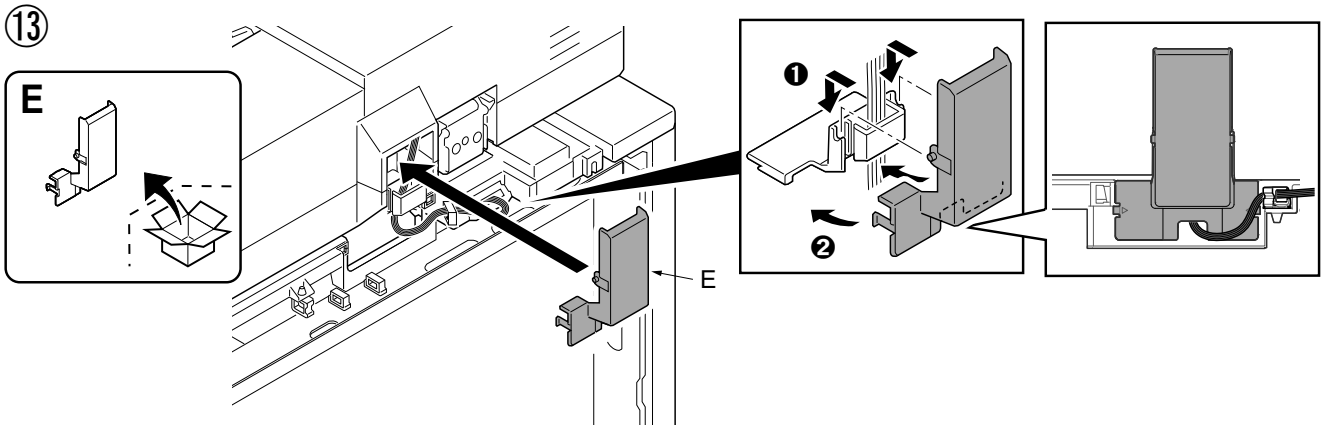

⑭

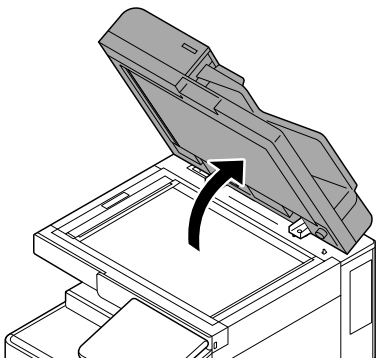

⑮

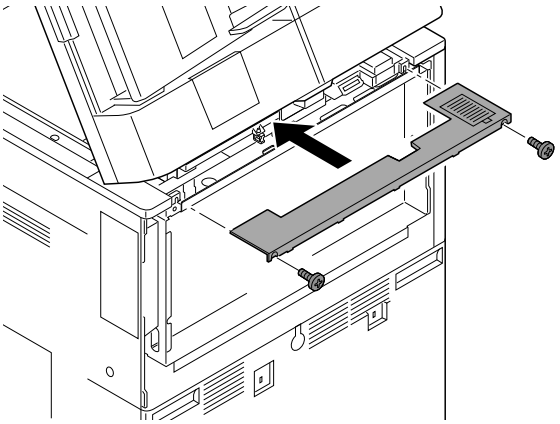

⑯

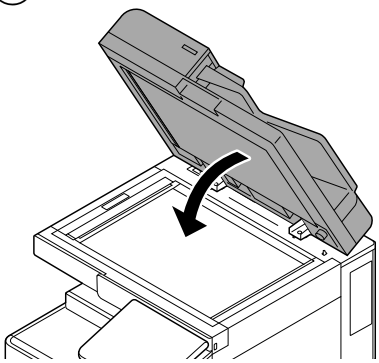

⑰

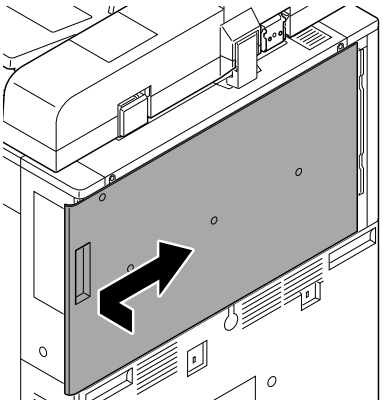

⑱

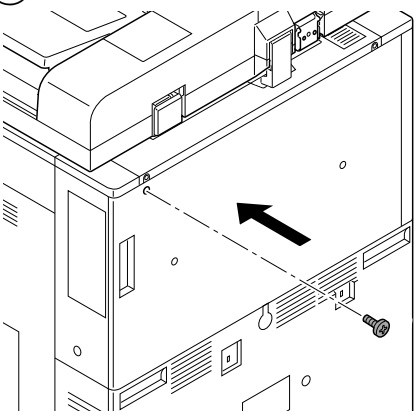

⑲

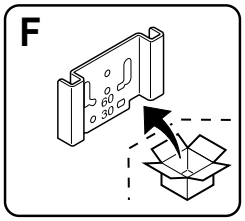

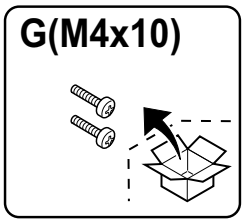

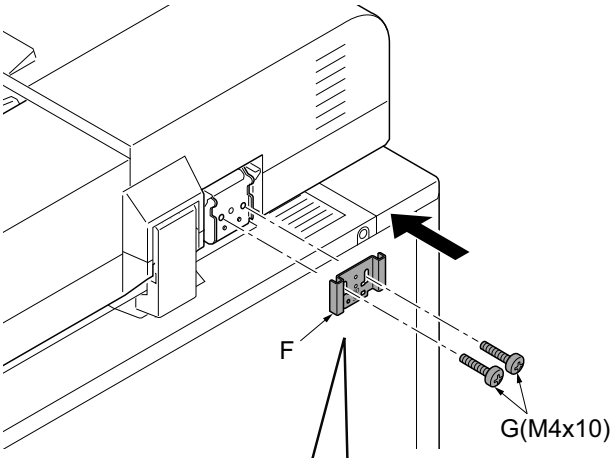

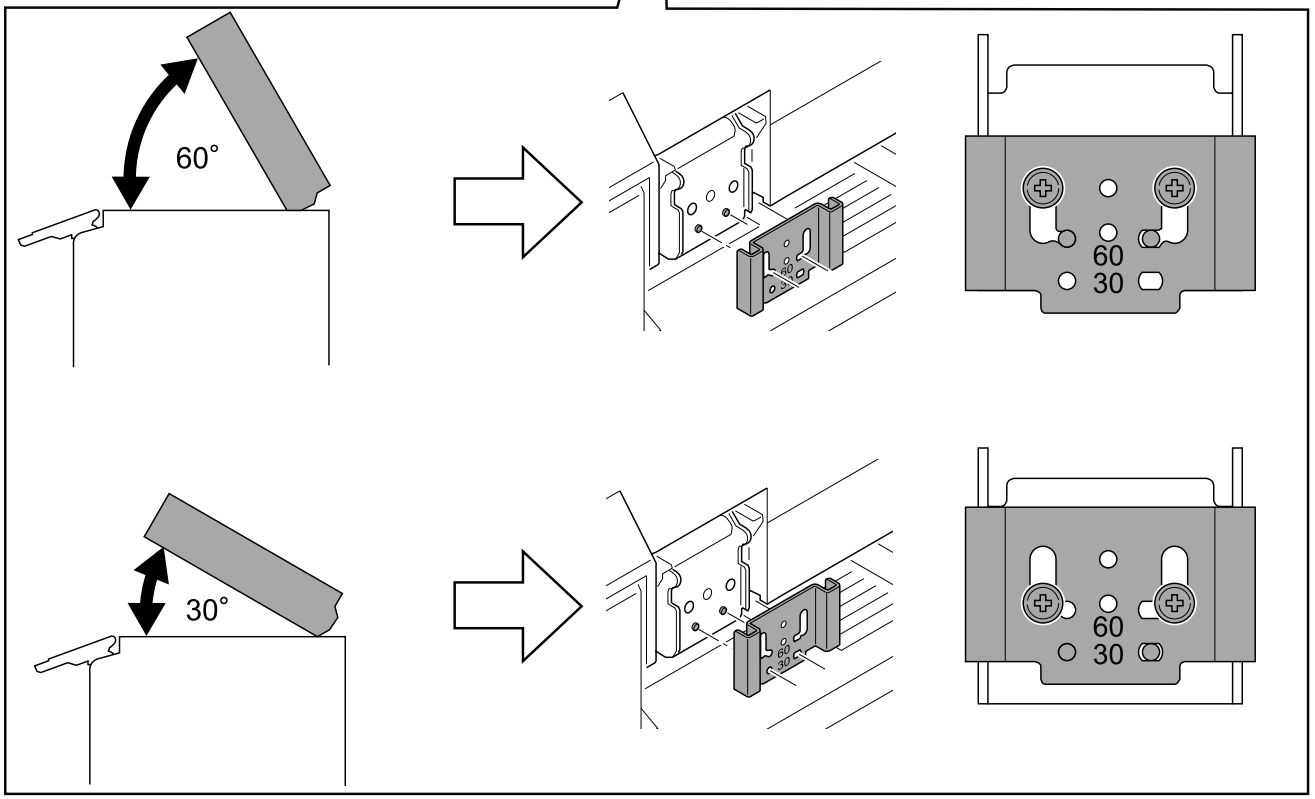

⑳

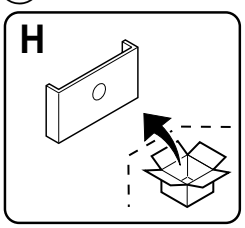

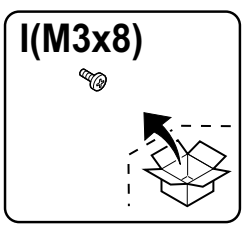

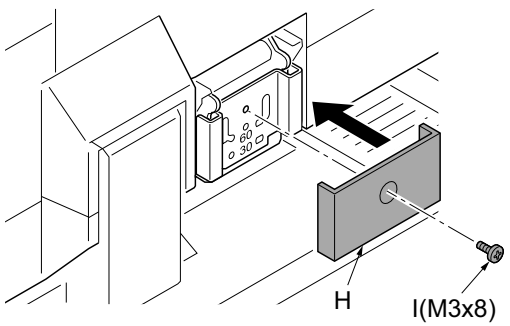

㉑

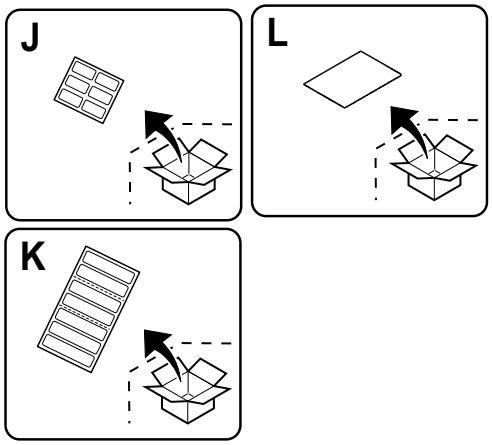

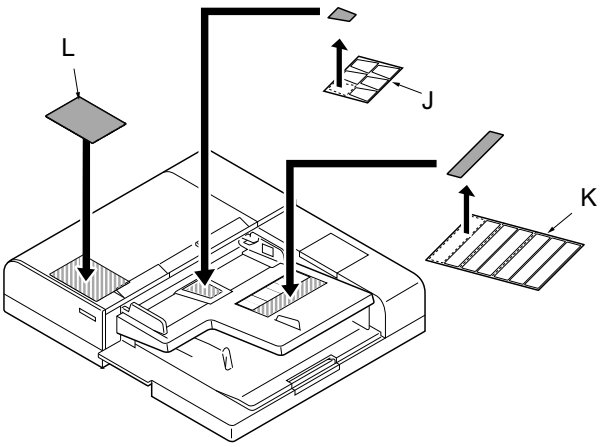

㉒

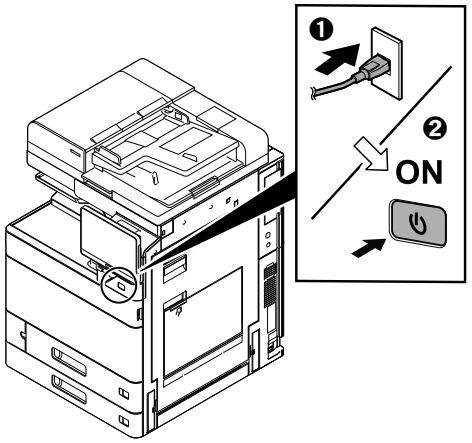

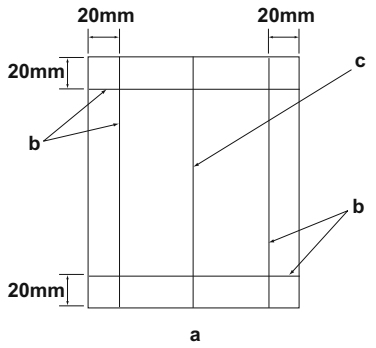

[Operation check]

1. To check the machine operation, prepare original (a) where 4 lines (b) are drawn 20 mm from the edges of the A3 sheet and 1 line (c) is drawn at its center.
2. Connect the power plug of the MFP into the wall outlet and turn the main power switch on.
3. Set the original (a) on the DP and perform a test copy to check the operation and the copy example.

[Vérification du fonctionnement]

1. Pour vérifier le bon fonctionnement de l'appareil, préparer un original (a) sur lequel sont tracées 4 lignes (b) à 20 mm des bords de la feuille A3 et 1 ligne (c) en son axe.
2. Brancher la fiche d'alimentation du MFP sur la prise murale et mettre l'appareil sous tension.
3. Placer l'original (a) sur le DP et effectuer une copie de test pour vérifier le fonctionnement et l'exemple de copie.

[Verifique el funcionamiento]

1. Para comprobar el funcionamiento del aparato, prepare un original (a) que contenga 4 líneas (b) dibujadas a 20 mm de los bordes de la hoja A3 y 1 línea (c) dibujada en el centro.
2. Conecte el enchufe eléctrico del MFP en el tomacorriente de la pared y encienda el interruptor principal.
3. Coloque el original (a) en el DP y haga una copia de prueba para verificar el funcionamiento y el ejemplo de copia.

[Funktionsprüfung]

1. Zum Prüfen der Gerätefunktion das Original (a) vorbereiten, auf das 4 Linien (b) 20 mm von den Kanten des A3-Blattes und 1 Linie (c) in der Mitte gezeichnet sind.
2. Den Netzstecker am MFP in die Steckdose stecken und den Strom einschalten.
3. Das Original (a) auf den DP legen und eine Testkopie erstellen, um die Funktion und das Kopierbeispiel zu prüfen.

[Verifica del funzionamento]

1. Per verificare il funzionamento della macchina, preparare l'originale (a) tirando 4 linee (b) a 20 mm dai bordi del foglio A3 e una linea (c) al centro.
2. Inserire la spina dell'alimentazione dell'MFP nella presa a muro, quindi posizionare l'interruttore principale su On.
3. Posizionare l'originale(a) sul DP ed eseguire una copia di prova per verificare il funzionamento e l'esempio di copia.

[动作确认]

1. 若要检查机器动作，准备一张 A3 原稿（a），距纸张边缘 20mm 画出 4 条线（b）并且在原稿中心画出 1 条线（c）。
2. 将 MFP 的电源插头插入墙壁插座并打开主电源。
3. 在 DP 上设定原稿（a）并进行测试复印，确认机器动作和复印样本。

[동작확인]

1. 기계 작동 확인을 위해서 , A3 용지 선단에서 20mm 떨어진 곳에 4 개의 선 (b) 과 센터에 1 개의 선 (c) 이 그려진 원고 (a) 를 준비 .
2. 콘센트에 MFP 전원플러그를 꽂고 메인 전원 스위치를 ON 으로 합니다 .
3. DP 상에 원고 (a) 를 준비하고 테스트 카피를 확인하여 작동 상태와 카피 샘플를 확인합니다 .

[動作確認]

1. A3 サイズ用紙の端から 20mm の位置に線 (b)4 本と、用紙の中心に線 (c)1 本を引いた、動作確認用の原稿 (a) を用意する。
2. MFP の電源プラグをコンセントに差し込み、主電源スイッチを ON にする。
3. 原稿 (a) を DP にセットし、テストコピーを行い、動作およびコピーサンプルを確認する。

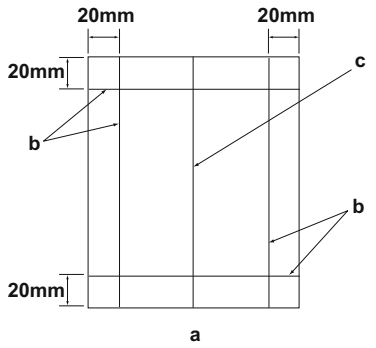

4. Compare original (a) with the copy example. If the gap exceeds the reference value, perform the following adjustments according to the type of the gap.
Check images of the DP after checking and adjusting images of the MFP. For details, see the service manual.
NOTICE: If there is any image fogging, adjust the U068 DP scanning position. If you change the scanning position with U068, adjust the U071 DP leading edge timing.

---

4. Comparer l'original (a) avec l'exemple de copie. Si l'écart excède la valeur de référence, effectuer les réglages suivants en fonction du type d'écart.
Vérifier les images du DP après avoir contrôlé et réglé les images du MFP. Pour plus de détails, se reporter au manuel d'entretien.
REMARQUE: Si l'image est floue, régler la position de balayage de U068 du DP. Si la position de balayage de U068 est modifiée, régler la synchronisation du bord d'attaque de U071.

---

4. Compare el original (a) con el ejemplo de copia. Si la separación supera el valor de referencia, realice los siguientes ajustes según el tipo de separación.
Compruebe las imágenes del DP después de comprobar y ajustar las imágenes del MFP. Para más detalles, lea el manual de servicio.
AVISO: Si la imagen estuviera borrosa, ajuste la posición de escaneo U068 del DP. Si cambia la posición de escaneo con U068, ajuste la sincronización de borde superior U071 del DP

---

4. Das Original (a) mit dem Kopierbeispiel vergleichen. Wenn der Abstand größer als der Bezugswert ist, die folgenden Einstellungen gemäß dem Abstandstyp durchführen.
Die Bilder des DP nach dem Prüfen und Einstellen der Bilder des MFP prüfen. Weitere Einzelheiten siehe Wartungsanleitung.
ANMERKUNG: Falls das Bild verschwommen wirkt, ist die U068 DP Scan-Position zu verstellen. Wenn Sie die Scan-Position mit U068 verstellen, müssen Sie das U071 DP-Vorderkanten-Timing entsprechend verstellen.

---

4. Confrontare l'originale (a) con l'esempio di copia. Se lo scostamento supera il valore di riferimento, eseguire le seguenti regolazioni in funzione del tipo di scostamento.
Controllare le immagini del DP dopo avere effettuato i controlli e le regolazioni delle immagini sull'MFP. Per ulteriori dettagli leggere il manuale d'istruzioni.
AVVISO: Se è presente una qualsiasi sfocatura dell'immagine, regolare la posizione di scansione DP U068. Se si cambia la posizione di scansione con U068, regolare la sincronizzazione del bordo principale DP U071.

---

4. 对比复印样本和原稿（a），如果偏移值在标准值以上时，对偏移原稿进行调整。
对 MFP 的图像确认和调整后再对 DP 的图像进行确认。详细内容请参见维修手册。
（注意）如果图像出现底灰，用 U068 来调整 DP 的扫描位置。如果用 U068 更改了扫描位置，则再用 U071 对 DP 的前端定时进行调整。

---

4. 원고 (a) 와 카피 샘플을 비교하여 차이가 기준치를 벗어나는 경우 , 차이 (틈) 의 형태에 따라 다음을 조정합니다 .
MFP 의 화상확인 및 조정을 하고나서 DP 의 화상확인을 할 것 . 상세는 서비스 매뉴얼을 참조할 것 .
(주의) 화상 카브리가 발생하는 경우 , U068DP 스캔위치 조정을 합니다 . U068 에서 스캔위치를 변경한 경우 U071DP 선단 타이밍 조정을 합니다 .

---

4. 原稿 (a) とコピーサンプルを比較し、基準値以上のずれがある場合、ずれ方に応じて調整を行う。
MFP の画像確認及び調整を行ってから DP の画像確認を行うこと。詳細はサービスマニュアルを参照のこと。
(注意)画像カブリが発生する場合、U068 DP 読み取り位置の調整を行う。U068 で読み取り位置を変更した場合、U071 DP 先端タイミング調整を行う。

Be sure to adjust in the following order. If not, the adjustment cannot be performed correctly.
For checking the angle of leading edge, see page 10. <Reference value> Simplex copying: within ±3.0 mm; Duplex copying: within ±4.0 mm
For checking the angle of trailing edge, see page 14. <Reference value> Simplex copying: within ±3.0 mm; Duplex copying: within ±4.0 mm
For checking the magnification, see page 18. <Reference value> Within ±1.5%

Veillez à effectuer le réglage en procédant dans l'ordre suivant. Sinon, il sera impossible d'obtenir un réglage correct.
Pour vérifier l'angle du bord avant, reportez-vous à la page 10. <Valeur de référence>Copie recto seul: ±3,0 mm max.; copie recto verso: ±4,0 mm max.
Pour vérifier l'angle du bord arrière, reportez-vous à la page 14. <Valeur de référence>Copie recto seul: ±3,0 mm max.; copie recto verso: ±4,0 mm max.
Pour vérifier l'agrandissement, reportez-vous à la page 18 <Valeur de référence>±1,5% max.

Asegúrese de ajustar en el siguiente orden. De lo contrario, el ajuste no puede hacerse correctamente.
Para verificar el ángulo del borde superior, vea la página 10. <Valor de referencia>Copia simple: dentro de ±3,0 mm; Copia duplex: dentro de ±4,0 mm
Para verificar el ángulo del borde inferior, vea la página 14. <Valor de referencia>Copia simple: dentro de ±3,0 mm; Copia duplex: dentro de ±4,0 mm
Para verificar el cambio de tamaño, vea la página 18. <Valor de referencia>Dentro de ±1,5 %

Die Einstellung in der folgenden Reihenfolge durchführen. Anderenfalls kann die Einstellung nicht korrekt durchgeführt werden.
Angaben zur Prüfung des Winkels der Vorderkante auf Seite 10. <Bezugswert>Simplexkopie: innerhalb ±3,0 mm; Duplexkopie: innerhalb ±4,0 mm
Angaben zur Prüfung des Winkels der Hinterkante auf Seite 14. <Bezugswert>Simplexkopie: innerhalb ±3,0 mm; Duplexkopie: innerhalb ±4,0 mm
Angaben zur Prüfung der Vergrößerung auf Seite 18. <Bezugswert> Innerhalb ±1,5 %

Accertarsi di eseguire le regolazioni in questa sequenza: in caso contrario, la regolazione non può essere effettuata correttamente.
Per controllare l'angolo del bordo principale, vedere pagina 10. <Valore di riferimento>Copia simplex: entro ±3,0 mm; Copia duplex: entro ±4,0 mm
Per controllare l'angolo del bordo di uscita, vedere pagina 14. <Valore di riferimento>Copia simplex: entro ±3,0 mm; Copia duplex: entro ±4,0 mm
Per controllare l'ingrandimento, vedere pagina 18. <Valore di riferimento>Entro ±1,5%

必须按照以下步骤进行调整，否则不能达到准确调整的要求。
·确认前端倾斜度 第 10 页 〈标准值〉 单面：±3.0㎜ 以内，双面：±4.0㎜ 以内
·确认后端倾斜度 第 14 页 〈标准值〉 单面：±3.0㎜ 以内，双面：±4.0㎜ 以内
·确认等倍值 第 18 页 〈标准值〉 ±1.5% 以内

반드시 하기의 순서로 조정을 할 것 . 순서대로 조정을 하지 않는 경우 바른 조정을 할 수 없습니다 .
·선단경사확인 10 페이지 <기준치> 단면 : ±3.0mm 이내 , 양면 : ±4.0mm 이내
·후단경사확인 14 페이지 <기준치> 단면 : ±3.0mm 이내 , 양면 : ±4.0mm 이내
·등배도 확인 18 페이지 <기준치> ±1.5% 이내

必ず下記の順序で調整を行うこと。順序通りに調整を行わない場合、正しい調整ができない。
·先端斜め確認 10 ページ ＜基準値＞片面 : ±3.0㎜ 以内、両面 : ±4.0㎜ 以内
·後端斜め確認 14 ページ ＜基準値＞片面 : ±3.0㎜ 以内、両面 : ±4.0㎜ 以内
·等倍度確認 18 ページ ＜基準値＞ ±1.5% 以内

For checking the leading edge timing, see page 20. <Reference value> Within ±2.5 mm
For checking the center line, see page 22. <Reference value> Simplex copying: within ±2.0 mm;
Duplex copying: within ±3.0 mm

When using the original for adjustment, automatic adjustment of magnification, leading edge timing and center line can be performed at a time.
For the automatic adjustment using the original for adjustment, see page 24.

Pour vérifier la synchronisation du bord avant, reportez-vous à la page 20. <Valeur de référence> ±2,5 mm max.
Pour vérifier la ligne médiane, reportez-vous à la page 22. <Valeur de référence> Copie recto seul: ±2,0 mm max.;
Copie recto verso: ±3,0 mm max.

Lorsque vous utilisez l'original pour effectuer le réglage, vous pouvez effectuer automatiquement le réglage de l'agrandissement, de la synchronisation du bord avant et de la ligne médiane en une seule fois.
Pour le réglage automatique en utilisant l'original pour effectuer le réglage, reportez-vous à la page 24.

Para verificar la sincronización del borde inferior, vea la página 20. <Valor de referencia> Dentro de ±2,5 mm
Para verificar la línea central, vea la página 22. <Valor de referencia> Copia simple: dentro de ±2,0 mm;
Copia duplex: dentro de ±3,0 mm

Cuando utilice el original para el ajuste, puede hacerse un ajuste automático del cambio de tamaño, sincronización del borde superior y línea central al mismo tiempo.
Para el ajuste automático utilizando el original para el ajuste, vea la página 24.

Angaben zur Prüfung des Vorderkanten-Timings auf Seite 20. <Bezugswert> Innerhalb ±2,5 mm
Angaben zur Prüfung der Mittellinie auf Seite 22. <Bezugswert> Simplexkopie: innerhalb ±2,0 mm;
Duplexkopie: innerhalb ±3,0 mm

Bei Verwendung des Originals für die Einstellung können die automatischen Einstellungen für Vergrößerung, Vorderkanten-Timing und Mittellinie gleichzeitig durchgeführt werden.
Angaben zur automatischen Einstellung mithilfe des Originals auf Seite 24.

Per controllare la sincronizzazione del bordo principale, vedere pagina 20. <Valore di riferimento> Entro ±2,5 mm
Per controllare la linea centrale, vedere pagina 22. <Valore di riferimento> Copia simplex: entro ±2,0 mm;
Copia duplex: entro ±3,0 mm

Quando si utilizza l'originale per la regolazione, la regolazione automatica dell'ingrandimento, della sincronizzazione del bordo principale e della linea centrale possono essere eseguiti contemporaneamente.
Per la regolazione automatica eseguita con l'originale, vedere pagina 24.

·确认前端定时调整 第 20 页 〈标准值〉 ±2.5㎜ 以内
·确认中心线 第 22 页 〈标准值〉 单面：±2.0㎜ 以内，
双面：±3.0㎜ 以内

使用调整用的原稿时，可以同时自动进行等倍值，前端定时以及中心线的调整。
·通过调整用原稿进行自动调整 第 24 页

·선단 타이밍 확인 20 페이지 <기준치> ±2.5mm 이내
·센터 라인확인 22 페이지 <기준치> 단면:±2.0mm 이내,
양면:±3.0mm 이내

조정용 원고를 사용하면 등배도 조정, 선단타이밍 조정, 센터 라인조정의 자동조정이 한번에 수행됩니다.
·조정용원고에 의한 자동조정 24 페이지

·先端タイミング確認 20 ページ ＜基準値＞ ±2.5㎜ 以内
·センターライン確認 22 ページ ＜基準値＞片面:±2.0㎜ 以内、
両面:±3.0㎜ 以内

調整用原稿を使用すると、等倍度調整、先端タイミング調整、センターライン調整の自動調整が一度におこなえる。
·調整用原稿による自動調整 24 ページ

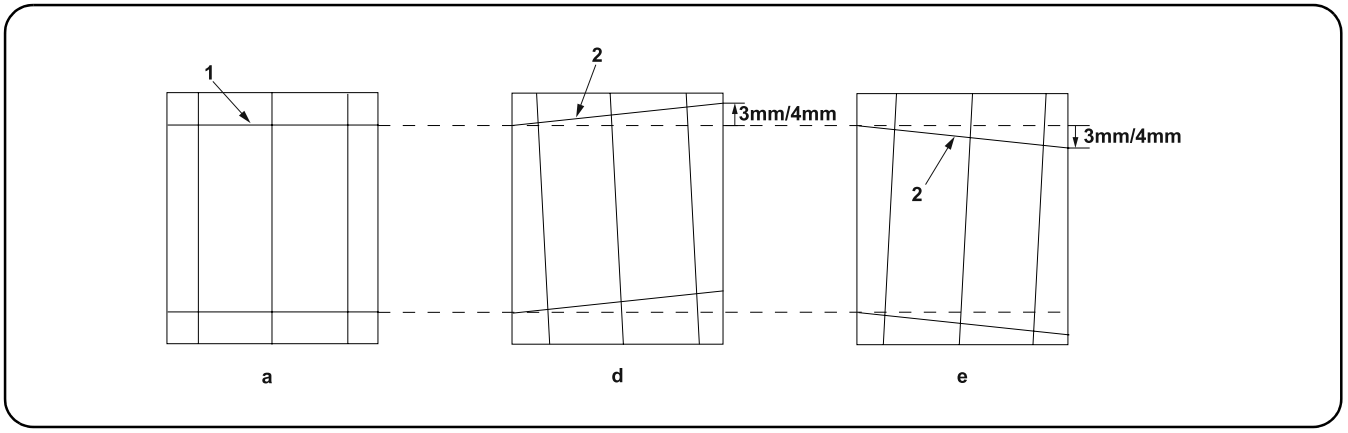

[Checking the angle of leading edge]

1. Check the horizontal gap between line (1) of original (a) and line (2) of copy example positions. If the gap exceeds the reference value, adjust the gap according to the following procedure.
<Reference value> For single copying: The horizontal gap of line (2) should be within ±3.0 mm.
For duplex copying: The horizontal gap of line (2) should be within ±4.0 mm.

[Vérification de l'angle du bord avant]

1. Vérifier l'écart horizontal entre la position de la ligne (1) de l'original (a) et celle de la ligne (2) de l'exemple de copie. Si l'écart excède la valeur de référence, le régler selon la procédure suivante.
<Valeur de référence> Pour la copie recto : l'écart horizontal de la ligne (2) doit être de ±3,0 mm.
Pour la copie recto-verso : l'écart horizontal de la ligne (2) doit être de ±4,0 mm.

[Verificación del ángulo del borde superior]

1. Compruebe la separación horizontal entre la línea (1) del original (a) y la línea (2) de las posiciones del ejemplo de copia. Si la separación supera el valor de referencia, ajústela siguiendo este procedimiento.
<Valor de referencia> Para el copiado por una cara: la separación horizontal de la línea (2) debe estar dentro de ±3,0 mm.
Para el copiado dúplex: la separación horizontal de la línea (2) debe estar dentro de ±4,0 mm.

[Überprüfen des Winkels der Vorderkante]

1. Den horizontalen Abstand zwischen der Linie (1) des Originals (a) und der Linie (2) der Kopierbeispielspositionen prüfen. Wenn der Abstand größer als der Bezugswert ist, den Abstand mit dem folgenden Verfahren einstellen.
<Bezugswert> Einzelkopie: Der horizontale Abstand der Linie (2) sollte innerhalb von ±3,0 mm liegen.
Duplexkopie: Der horizontale Abstand der Linie (2) sollte innerhalb von ±4,0 mm liegen.

[Controllo dell'angolo del bordo principale]

1. Verificare lo scostamento orizzontale fra la linea (1) dell'originale (a) e la linea (2) delle posizioni dell'esempio di copia. Se lo scostamento supera il valore di riferimento, regolare lo scostamento stesso seguendo questa procedura.
<Valore di riferimento> Per la copia singola: lo scostamento orizzontale della linea (2) deve limitarsi a ± 3,0 mm.
Per la copia duplex: lo scostamento orizzontale della linea (2) deve limitarsi a ±4,0 mm.

[确认前端倾斜度]

1. 确认原稿 (a) 上的线 (1) 和复印样本上的线 (2) 的左右偏移值。如果偏移值超过标准值，则按照下列步骤进行调整
< 标准值 > 单面复印时，线 (2) 的左右偏移值 : ±3.0㎜ 以内。
双面复印时，线 (2) 的左右偏移值 : ±4.0㎜ 以内。

[선단 경사확인]

1. 원고 (a) 의 선 (1) 과 벨크로의 선 (2) 의 좌우 차이를 확인합니다 . 차이가 기준치 외의 경우 다음의 순서대로 조정을 합니다 .
< 기준체 > 단면의 경우 선 (2) 의 좌우차이 : ±3.0mm 이내
양면의 경우 선 (2) 의 좌우차이 : ±4.0mm 이내

[先端斜め確認]

1. 原稿 (a) の線 (1) とコピーサンプルの線 (2) の左右のずれを確認する。ずれが基準値外の場合、次の手順で調整を行う。
< 基準値 > 片面の場合、線 (2) の左右ずれ : ±3.0㎜ 以内
両面の場合、線 (2) の左右ずれ : ±4.0㎜ 以内

2.

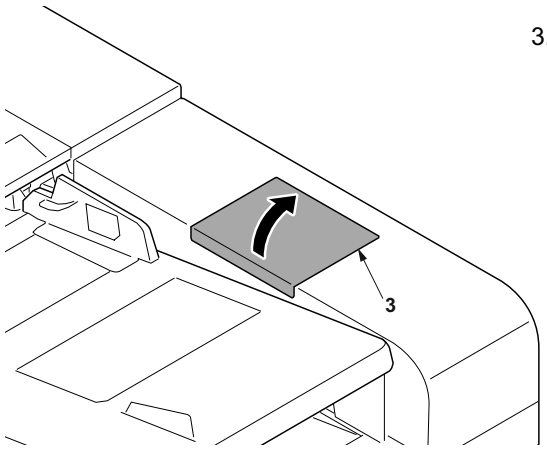

3.

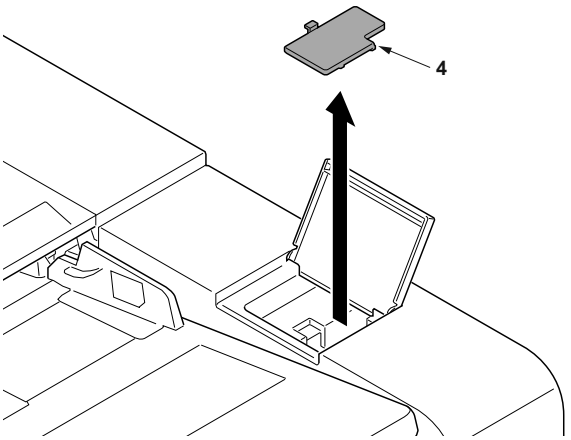

4.

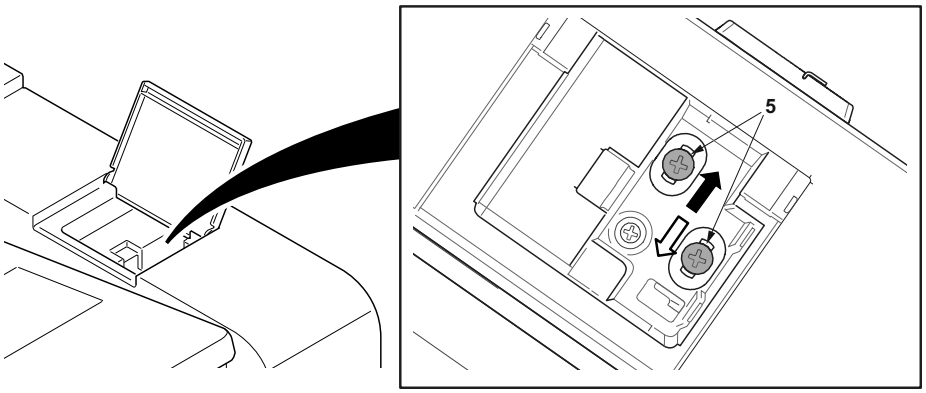

(EN)

Adjust the position of the DP unit (A).
Loosen the adjusting screw (5).
For copy example (d): Slide the DP unit (A) to the machine rear (➡).
For copy example (e): Slide the DP unit (A) to the machine front (⇨).
Tighten the adjusting screw (5).

(IT)

Regolare la posizione dell'unità DP (A).
Allentare la vite di regolazione (5).
Per un esempio di copia (d):
Far scivolare l'unità DP (A) verso il retro della macchina (➡).
Per un esempio di copia (e):
Far scivolare l'unità DP (A) verso la parte anteriore della macchina (⇨).
Stringere la vite di regolazione (5).

(FR)

Régler la position de l'unité CD (A).
Desserrez la vis de réglage (5).
Pour l'exemple de copie (d):
Faire glisser l'unité CD (A) à l'arrière de la machine (➡).
Pour l'exemple de copie (e):
Faire glisser l'unité CD (A) à l'avant de la machine (⇨).
Serrez la vis de réglage (5).

(ZHCN)

调节DP单元（A）的位置。
拧松调整螺丝（5）。
复印样张（d）时 ：DP单元（A）向机器后侧（➡）移动。
复印样张（e）时 ：DP单元（A）向机器前侧（⇨）移动。
紧固调整螺丝（5）。

(ES)

Ajuste la posición de la unidad DP (A).
Afloje el tornillo de ajuste (5).
Para la copia de muestra (d):
Deslice la unidad DP (A) hacia la parte posterior de la máquina (➡).
Para la copia de muestra (e):
Deslice la unidad DP (A) hacia el frente de la máquina (⇨).
Apriete el tornillo de ajuste (5).

(KO)

DP유니트 (A) 의 위치를 조정하세요.
조정나사(5)를 느슨하게 합니다.
샘플 카피(d)의 경우 :
DP유니트 (A) 를 기기의 뒤쪽(➡) 으로 밀어주세요.
샘플 카피(e)의 경우 :
DP유니트 (A) 를 기기의 앞쪽 (⇨) 으로 당겨주세요.
조정나사(5)를 조입니다.

(DE)

Stellen Sie die Position der DP-Einheit (A) ein.
Lösen Sie die Einstellschraube (5).
Für Kopienmuster (d):
Schieben Sie die DP-Einheit (A) zur Geräterückseite (➡).
Für Kopienmuster (e):
Schieben Sie die DP-Einheit (A) zur Gerätevorderseite (⇨).
Die Einstellschraube (5) festziehen.

(JA)

DPユニット(A) の位置調整を行う。
調整ビス(5)をゆるめる。
コピーサンプル(d)の場合：DPユニット(A) を機械後側（➡）にずらす。
コピーサンプル(e)の場合：DPユニット(A) を機械前側（⇨）にずらす。
調整ビス(5)を締める。

5.

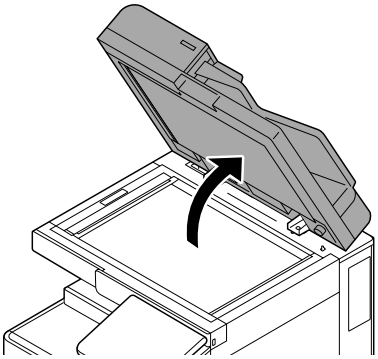

6.

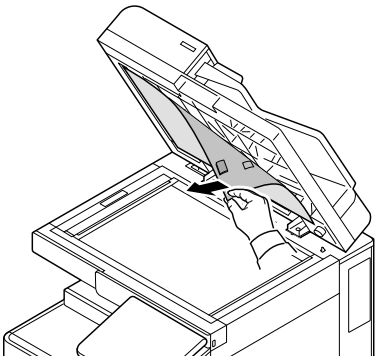

7.

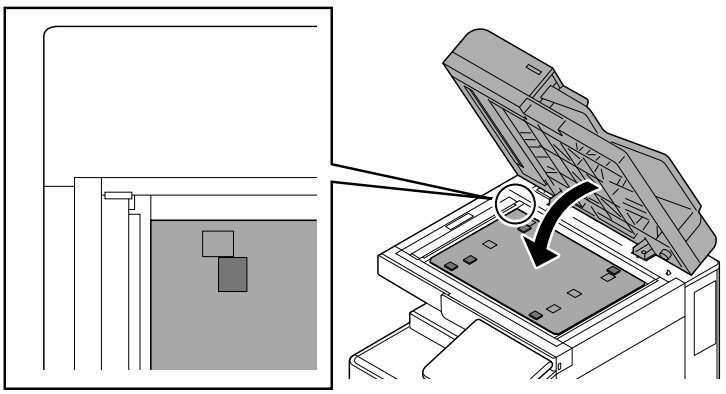

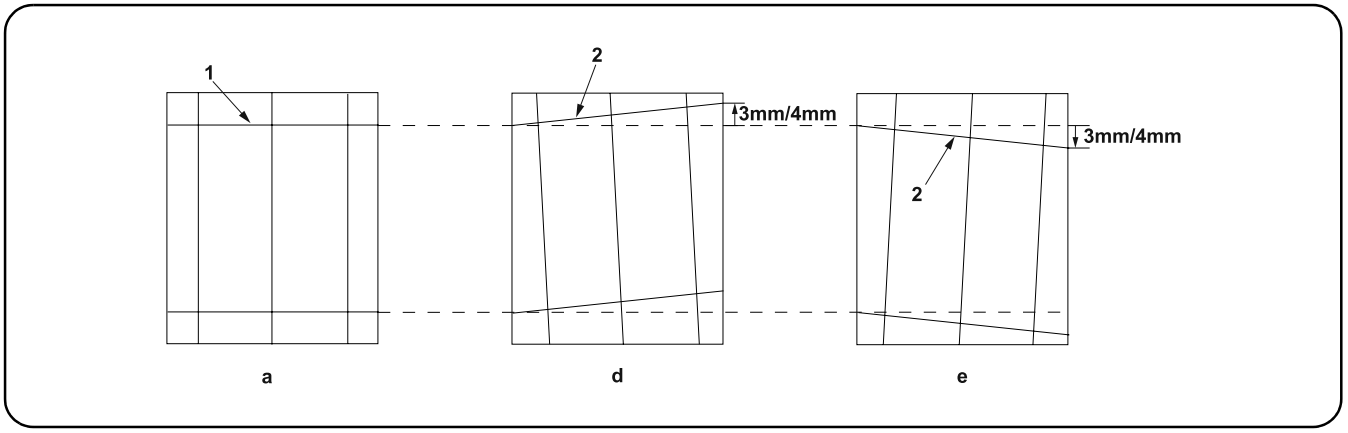

8.Perform a test copy.
9.Repeat the steps above until the gap of line (2) of copy example shows the following reference values.
<Reference value> For single copying: The horizontal gap of line (2) should be within ±3.0 mm.
For duplex copying: The horizontal gap of line (2) should be within ±4.0 mm.
10. After the adjustment, install the inner cover (4) which is removed in step 3.Close the DP cover (3).

8.Effectuer une copie de test.
9.Répéter les étapes ci-dessus jusqu'à ce que l'écart de la ligne (2) de l'exemple de copie indique les valeurs de référence suivantes.
<Valeur de référence>Pour la copie recto : l'écart horizontal de la ligne (2) doit être de ±3,0 mm.
Pour la copie recto-verso : l'écart horizontal de la ligne (2) doit être de ±4,0 mm.
10. Après l'ajustement, installez le capot interne (4) qui a été retiré à l'étape 3.Refermez le capot du DP (3).

8.Haga una copia de prueba.
9.Repita los pasos anteriores hasta que la separación de la línea (2) del ejemplo de copia presente los siguientes valores de referencia.
<Valor de referencia>Para el copiado por una cara: la separación horizontal de la línea (2) debe estar dentro de ±3,0 mm.
Para el copiado dúplex: la separación horizontal de la línea (2) debe estar dentro de ±4,0 mm.
10. Después del ajuste, instale la cubierta interna (4) que se quitó en el paso 3.Cierre la cubierta del DP (3).

8.Eine Testkopie erstellen.
9.Die obigen Schritte wiederholen, bis der Abstand der Linie (2) des Kopierbeispiels die folgenden Bezugswerte aufweist.
<Bezugswert>Einzelkopie: Der horizontale Abstand der Linie (2) sollte innerhalb von ±3,0 mm liegen.
Duplexkopie: Der horizontale Abstand der Linie (2) sollte innerhalb von ±4,0 mm liegen.
10. Nach der Einstellung installieren Sie die innere Abdeckung (4), die in Schritt 3 entfernt wurde.Schließen Sie die Abdeckung des DP (3).

8.Eseguire una copia di prova.
9.Ripetere le operazioni sopra descritte fino a quando lo scostamento della linea (2) dell'esempio di copia riporterà i valori di riferimento seguenti.
<Valore di riferimento>Per la copia singola: lo scostamento orizzontale della linea (2) deve limitarsi a ± 3,0 mm.
Per la copia duplex: lo scostamento orizzontale della linea (2) deve limitarsi a ±4,0 mm.
10. Al termine della regolazione, installare il coperchio interno (4), rimosso al punto 3.Chiudere il coperchio del DP (3).

---

8. 进行测试复印。
9. 重复上述步骤直至复印样本上的线(2)的偏移值达到标准值范围内。
〈标准值〉单面时，线(2)的左右偏移值：±3.0㎜以内
双面时，线(2)的左右偏移值：±4.0㎜以内
10. 调整结束后，重新安装在步骤3中取下的内部盖板(4)。关闭DP盖板(3)。

---

8. 테스트 카피를 합니다 .
9. 벨크로 선 (2) 차이가 기준치내가 될 때까지 조정을 반복합니다 .
<기준치>단면의 경우 선 (2) 의 좌우차이:±3.0mm 이내
양면의 경우 선 (2) 의 좌우차이:±4.0mm 이내
10. 조정 후에 순서 3 에서 분리한 내부 커버 (4) 를 설치합니다 .DP 커버 (3) 를 닫습니다 .

---

8. テストコピーを行う。
9. コピーサンプルの線 (2) のずれが基準値内になるまで、調整を繰り返す。
＜基準値＞
片面の場合、線 (2) の左右ずれ:±3.0㎜以内
両面の場合、線 (2) の左右ずれ:±4.0㎜以内
10. 調整終了後、手順3で外したインナーカバー(4) を取り付ける。DP カバー(3) を閉める。

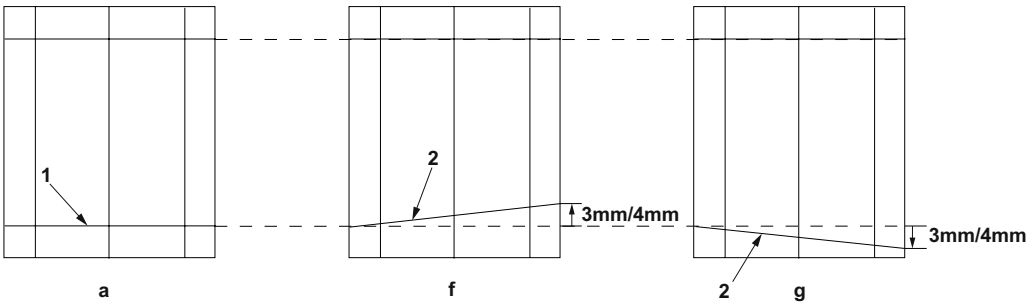

[Checking the angle of trailing edge]

1. Check the gap between line (1) of original (a) and line (2) of copy example. If the gap exceeds the reference value, perform the following adjustment.
<Reference value> For simplex copying: Within ±3.0 mm
For duplex copying: Within ±4.0 mm

[Vérification de l'angle du bord arrière]

1. Vérifiez l'écart entre la ligne (1) de l'original (a) et la ligne (2) de l'exemple de copie. Si l'écart est supérieur à la valeur de référence, effectuez le réglage suivant.
<Valeur de référence> Copie recto seul: ±3,0 mm max.
Copie recto verso: ±4,0 mm max.

[Verificación del ángulo del borde inferior]

1. Verifique la separación entre la línea (1) del original (a) y la línea (2) de la copia de muestra. Si la superación supera el valor de referencia, haga el siguiente ajuste.
<Valor de referencia> Para copia simple: Dentro de ±3,0 mm
Para copia duplex: Dentro de ±4,0 mm

[Überprüfen des Winkels der Hinterkante]

1. Die Abweichung der Linie (1) des Originals (a) und der Linie (2) des Kopienmusters prüfen. Überschreitet die Abweichung den Bezugswert, ist die folgende Einstellung durchzuführen.
<Bezugswert> Für Simplexkopie: Innerhalb ±3,0 mm
Für Duplexkopie: Innerhalb ±4,0 mm

[Controllo dell'angolo del bordo di uscita]

1. Controllare la differenza tra la linea (1) dell'originale (a) e la linea (2) della copia di esempio. Se la differenza supera il valore di riferimento, effettuare la seguente regolazione.
<Valore di riferimento> Per copia simplex: Entro ±3,0 mm
Per copia duplex: Entro ±4,0 mm

[确认后端倾斜度]

1. 确认原稿 (a) 上的线 (1) 和复印样本上的线 (2) 的偏移值。如果超过标准值时，必须进行调整。
〈标准值〉单面时：±3.0㎜ 以内
双面时：±4.0㎜ 以内

[후단 경사확인]

1. 원고 (a) 의 선 (1) 과 벨크로 선 (2) 의 차이를 확인합니다 . 차이가 기준치 외의 경우에는 조정을 합니다 .
＜기준치＞단면의 경우:±3.0mm 이내
양면의 경우:±4.0mm 이내

[後端斜め確認]

1. 原稿 (a) の線 (1) とコピーサンプルの線 (2) のずれを確認する。ずれが基準値外の場合は調整をおこなう。
＜基準値＞片面の場合:±3.0㎜ 以内
両面の場合:±4.0㎜ 以内

2.

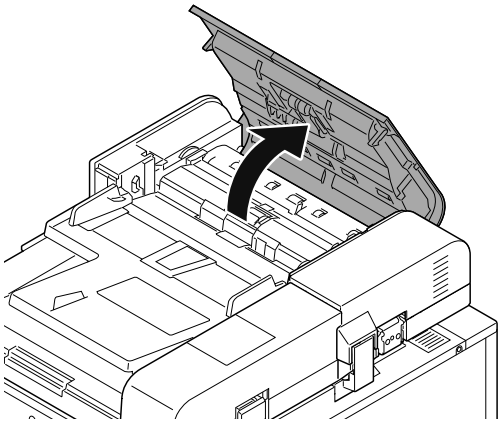

3.

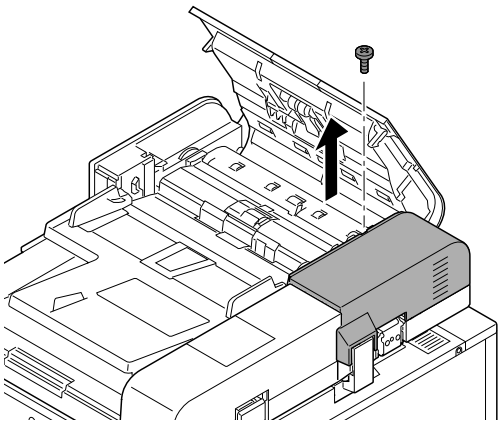

4.

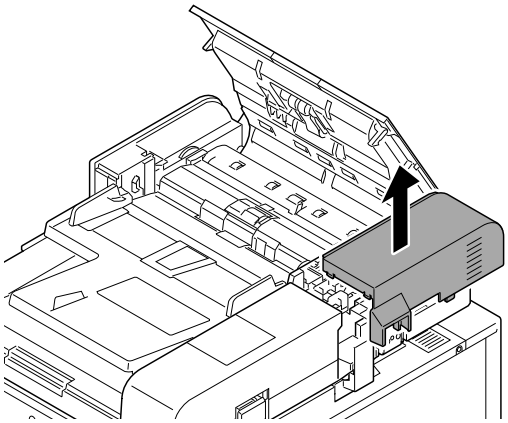

5.

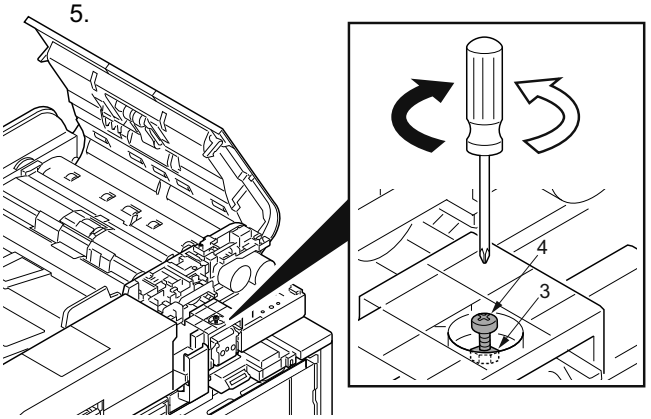

(EN)

Adjust the height of DP.
Loosen the nut (3).
For copy example (f): Loosen the adjusting screw (4).
For copy example (g): Tighten the adjusting screw (4).
Retighten the nut (3).

(FR)

Réglez la hauteur du DP.
Desserrez l'écrou (3).
Pour l'exemple de copie (f): Desserrez la vis de réglage (4).
Pour l'exemple de copie (g): Serrez la vis de réglage (4).
Resserrez l'écrou (3).

(ES)

Ajuste la altura del DP.
Afloje la tuerca (3).
Para la copia de muestra (f): Afloje el tornillo de ajuste (4).
Para la copia de muestra (g): Apriete el tornillo de ajuste (4).
Vuelva a apretar la tuerca (3).

(DE)

Die Höhe des DP einstellen.
Lösen Sie die Mutter (3).
Für Kopienmuster (f) : Lösen Sie die Einstellschraube (4).
Für Kopienmuster (g): Die Einstellschraube (4) festziehen.
Ziehen Sie die Mutter (3) wieder fest.

(IT)

Regolazione dell'altezza del DP
Allentare il dado (3).
Per un esempio di copia (f): Allentare la vite di regolazione (4).
Per un esempio di copia (g): Stringere la vite di regolazione (4).
Stringere di nuovo il dado (3).

(ZHCN)

调整DP的高度。
松驰螺母（3）。
复印样张（f）时 ：松弛调整螺丝（4）。
复印样张（g）时 ：紧固调整螺丝（4）。
将螺母（3）按原样紧固好。

(KO)

DP의 높이를 조정합니다.
너트(3)를 느슨하게 합니다.
벨크로(f)의 경우 : 조정나사(4)를 느슨하게 합니다.
벨크로(g)의 경우 : 조정나사(4)를 조입니다.
너트(3)를 원래대로 조입니다.

(JA)

DPの高さを調整する。
ナット(3)をゆるめる。
コピーサンプル(f)の場合：調整ビス(4)をゆるめる。
コピーサンプル(g)の場合：調整ビス(4)を締める。
ナット(3)を元通り締める。

6.

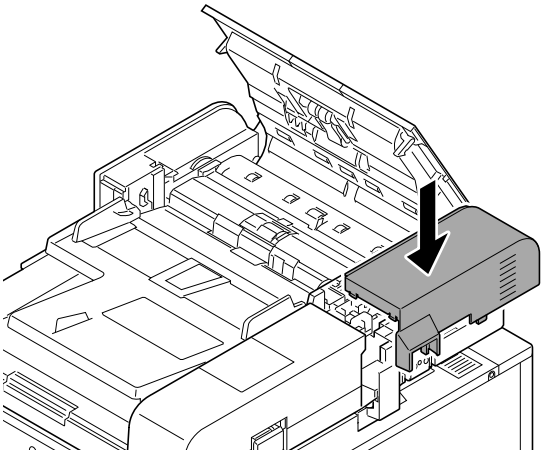

7.

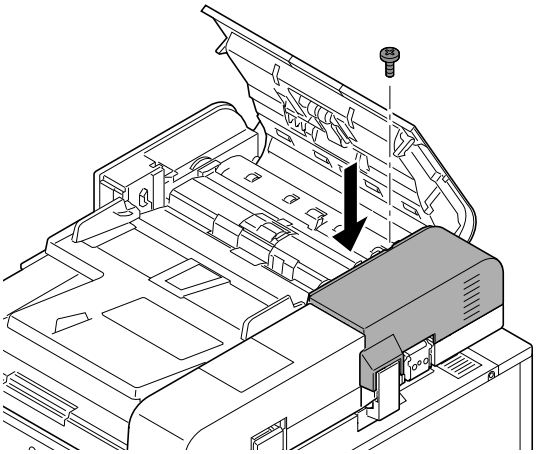

8.

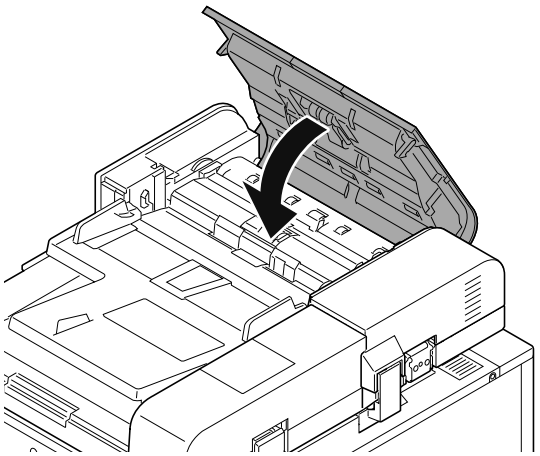

9.

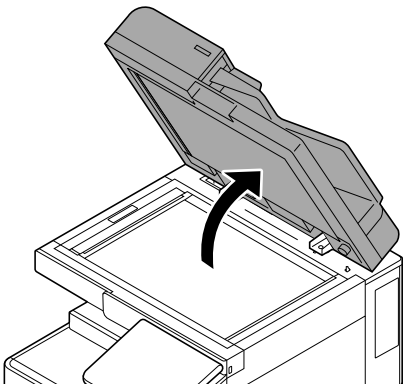

10.

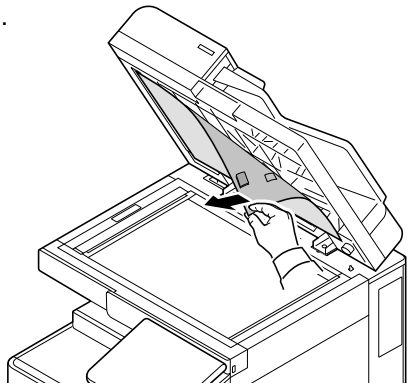

11.

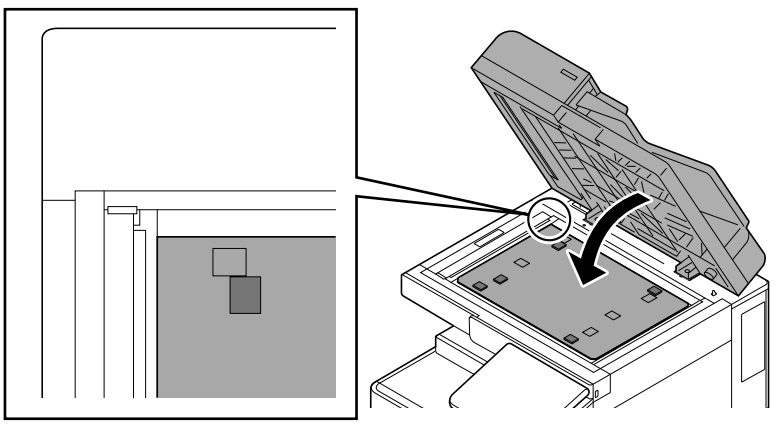

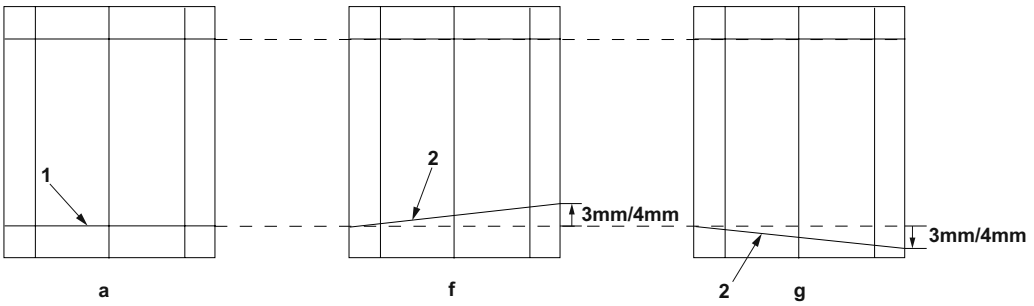

12. Make a proof copy again.
13. Repeat steps 1 to 12 until line (2) of copy example shows the following the reference values.
<Reference value> For simplex copying: Within ±3.0 mm
For duplex copying: Within ±4.0 mm

---

12. Effectuez à nouveau une copie de test.
13.Répétez les étapes 1 à 12 jusqu'à ce que la ligne (2) de l'exemple de copie corresponde aux valeurs de référence suivantes.
<Valeur de référence> Copie recto seul: ±3,0 mm max.
Copie recto verso: ±4,0 mm max.

---

12. Haga otra copia de prueba.
13. Repita los pasos 1 a 12 hasta que la línea (2) de la copia de muestra tenga los siguientes valores de referencia.
<Valor de referencia> Para copia simple: Dentro de ±3,0 mm
Para copia duplex: Dentro de ±4,0 mm

---

12. Eine erneute Probekopie anfertigen.
13. Die Schritte 1 bis 12 wiederholen, bis die Linie (2) des Kopienmusters die folgenden Bezugswerte aufweist.
<Bezugswert> Für Simplexkopie: Innerhalb ±3,0 mm
Für Duplexkopie: Innerhalb ±4,0 mm

---

12. Eseguire di nuovo una prova di copia.
13. Ripetere i passi da 1 a 12 fino a che la linea (2) dell'esempio di copia non mostra i seguenti valori di riferimento.
<Valore di riferimento>Per copia simplex: Entro ±3,0 mm
Per copia duplex: Entro ±4,0 mm

---

12. 再次进行测试复印。
13. 反复操作步骤 1~12，直至复印样张的线（2）为标准值内。
〈标准值〉单面时：±3.0mm 以内
双面时：±4.0mm 以内

---

12. 다시 벨크로를 합니다 .
13. 벨크로 선 (2) 이 기준치내로 될 때까지 순서 1 ~ 12 을 반복합니다 .
<기준치>단면의 경우:±3.0m 이내
양면의 경우:±4.0mm 이내

---

12. 再度テストコピーをおこなう。
13. コピーサンプルの線 (2) が基準値内になるまで、手順 1 ～ 12 を繰り返す。
＜基準値＞片面の場合:±3.0mm 以内
両面の場合:±4.0mm 以内

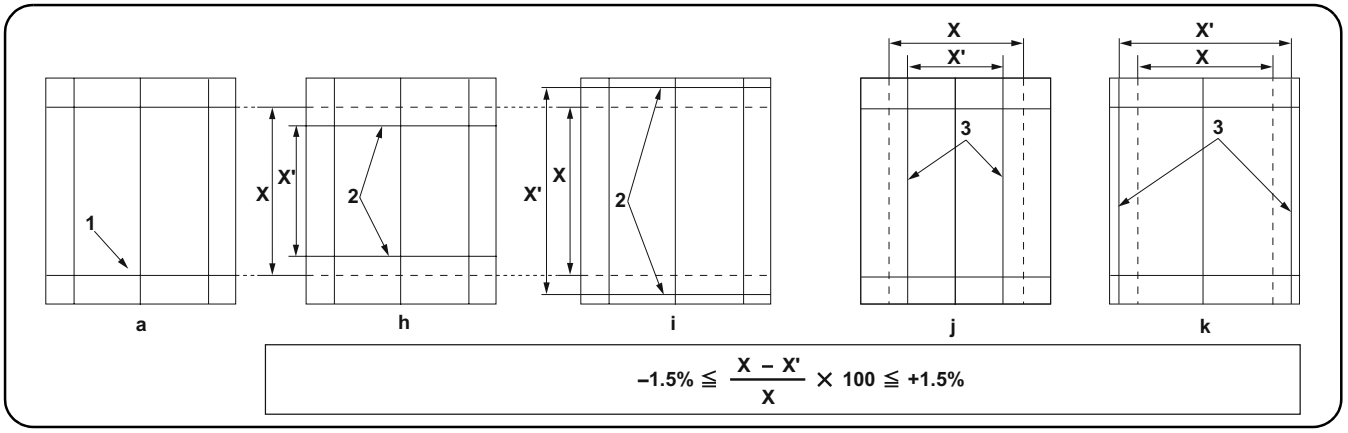

[Checking the magnification]

1. Check the gap between line (1) of original (a) and line (2) (3) of copy example. If the gap exceeds the reference value, adjust the gap according to the following procedure.
<Reference value>
For the sub-scan direction, vertical gap of line (2): within ±1.5%
For the main-scan direction, horizontal gap of line (3): within ±1.5%

2. Use the maintenance mode U070 to adjust the sub scan direction.
Sub Scan(F): Adjusts the scanner sub-scan magnification (front side)
Sub Scan(B): Adjusts the scanner sub-scan magnification (rear side)
Use the maintenance mode U065 to adjust the main scan direction by pressing [Main Scan].

[Vérification de l'agrandissement]

1. Vérifier l'écart entre la ligne (1) de l'original (a) et la ligne (2) (3) de l'exemple de copie. Si l'écart excède la valeur de référence, le régler selon la procédure suivante.
<Valeur de référence>
Pour la direction du balayage secondaire, l'écart vertical de la ligne (2) est de ±1,5%
Pour la direction du balayage principal, l'écart horizontal de la ligne (3) est de ±1,5%

2. Utilisez le mode maintenance U070 pour régler la direction de numérisation secondaire
Sub Scan(F): Permet de régler l'agrandissement du balayage secondaire du scanner (recto)
Sub Scan(B): Permet de régler l'agrandissement du balayage secondaire du scanner (arrière)
Utilisez le mode maintenance U065 pour régler la direction de numérisation principale en appuyant sur [Main Scan]

[Verificación del cambio de tamaño]

1. Compruebe la separación entre la línea (1) del original (a) y la línea (2) (3) del ejemplo de copia. Si la separación supera el valor de referencia, ajústela siguiendo este procedimiento.
<Valor de referencia>
Para la dirección de exploración secundaria, separación vertical de la línea (2): dentro de ±1,5%
Para la dirección de exploración principal, separación horizontal de la línea (3): dentro de ±1,5%

2. Use el modo de mantenimiento U070 para ajustar la dirección de escaneado secundario
Sub Scan(F): ajusta el cambio de tamaño de la dirección de exploración secundaria del escáner(anverso).
Sub Scan(B): ajusta el cambio de tamaño de la dirección de exploración secundaria del escáner(reverso).
Use el modo de mantenimiento U065 para ajustar la dirección de escaneado principal pulsando [Main Scan]

[Überprüfen der Vergrößerung]

1. Den Abstand zwischen der Linie (1) des Originals (a) und der Linie (2) (3) des Kopierbeispiels prüfen. Wenn der Abstand größer als der Bezugswert ist, den Abstand mit dem folgenden Verfahren einstellen.
<Bezugswert>
Subscanrichtung: Vertikaler Abstand der Linie (2): Innerhalb ±1,5%
Hauptscanrichtung: Horizontaler Abstand der Linie (3): Innerhalb ±1,5%

2. Zum Einstellen der Subscanrichtung den Wartungsmodus U070 verwenden.
Sub Scan(F): Zur Einstellung der Subscan-Vergrößerung (Vorderseite)
Sub Scan(B): Zur Einstellung der Subscan-Vergrößerung (Rückseite)
Zum Einstellen der Hauptscanrichtung den Wartungsmodus U065 verwenden, indem Sie auf [Main Scan] drücken.

[Controllo dell'ingrandimento]

1. Verificare lo scostamento fra la linea (1) dell'originale (a) e la linea (2) (3) dell'esempio di copia. Se lo scostamento supera il valore di riferimento, regolare lo scostamento stesso seguendo questa procedura.
<Valore di riferimento>
Per l'orientamento della scansione ausiliare, lo scostamento verticale della linea (2) deve essere compreso fra ±1,5%
Per l'orientamento della scansione principale, lo scostamento orizzontale della linea (3) deve essere compreso fra ±1,5%

2. Usare la modalità di manutenzione U070 per regolare l'orientamento della scansione secondaria
Sub Scan(F): Regola l'ingrandimento della scansione ausiliare dello scanner (fronte)
Sub Scan(B): Regola l'ingrandimento della scansione ausiliare dello scanner (retro)
Usare la modalità di manutenzione U065 per regolare l'orientamento della scansione principale premendo [Main Scan]

[确认等倍值]

1. 确认原稿 (a) 上的线 (1) 和复印样本上的线 (2)、(3) 之间的偏移值。
如果偏移值超过标准值，则按照下列步骤进行调整。
〈 标准值 〉
对于副扫描方向，线 (2) 的上下偏移值 : ±1.5% 以内
对于主扫描方向，线 (3) 的左右偏移值 : ±1.5% 以内

2. 使用维修模式 U070 调整副扫描方向。
Sub Scan(F) : 读取副扫描等倍度的调整 (正面)
Sub Scan(B) : 读取副扫描等倍度的调整 (反面)
使用维修模式 U065 通过按 [Main Scan] 来调整主扫描方向。

[등배도확인]

1. 원고 (a) 선 (1) 과 벨크로의 선 (2)(3) 의 차이를 확인합니다 .
차이가 기준이외의 경우 , 다음 순서로 조정을 합니다 .
< 기준치 >
부주사 방향의 경우 선 (2) 의 상하차이 : ±1.5% 이내
주주사 방향의 경우 선 (3) 의 좌우차이 : ±1.5% 이내

2. 메인터넌스 모드 U070 을 사용하여 서브 스캔 방향을 조정하십시오 .
Sub Scan(F) : 스캔 부주사등배도의 조정 (표면)
Sub Scan(B) : 스캔 부주사등배도의 조정 (뒷면)
메인터넌스 모드 U065 를 사용하여 [Main Scan] 을 눌러 주 스캔 방향을 조정하십시오 .

[等倍度確認]

1. 原稿 (a) の線 (1) とコピーサンプルの線 (2) (3) のずれを確認する。
ずれが基準値外の場合、次の手順で調整を行う。
< 基準値 >
副走査方向の場合、線 (2) の上下ずれ : ±1.5% 以内
主走査方向の場合、線 (3) の左右ずれ : ±1.5% 以内

2. 副走査方向はメンテナンスモード U070 で調整を行う。
Sub Scan(F) : 読み取り副走査等倍度の調整 (表面)
Sub Scan(B) : 読み取り副走査等倍度の調整 (裏面)
主走査方向はメンテナンスモード U065 をセットし、「Main Scan」を押して調整を行う。

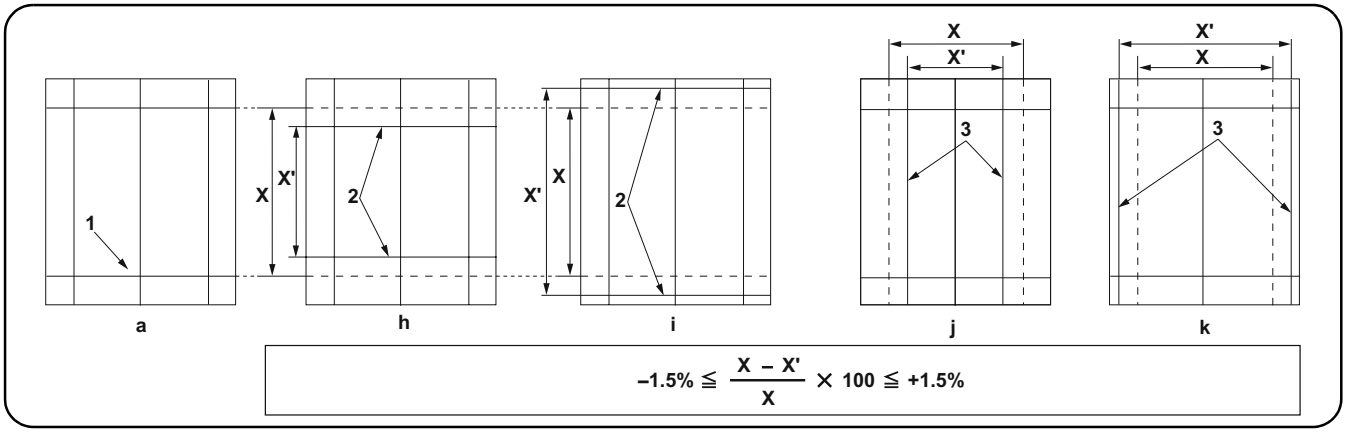

3. Adjust the values.
For the shorter length copy example (h)(j): Increases the value.
For the longer length copy example (i)(k): Decreases the value.
Amount of change per step: 0.1 %
4. Perform a test copy.
5. Repeat the steps 2 to 4 above until the gap of line (2) (3) of copy example shows the reference value.
<Reference value>
For the sub-scan direction, vertical gap of line (2): within ±1.5%
For the main-scan direction, horizontal gap of line (3): within ±1.5%

---

3. Régler les valeurs.
Pour l'exemple de copie dont la longueur est plus courte (h)(j) : augmenter la valeur.
Pour l'exemple de copie dont la longueur est plus longue (i)(k) : diminuer la valeur.
Changement par graduation d'échelle : 0,1 %
4. Effectuer une copie de test.
5. Répéter les étapes 2 à 4 jusqu'à ce que l'écart de la ligne (2) (3) de l'exemple de copie indique la valeur de référence.
<Valeur de référence>
Pour la direction du balayage secondaire, l'écart vertical de la ligne (2) est de ±1,5%
Pour la direction du balayage principal, l'écart horizontal de la ligne (3) est de ±1,5%

---

3. Ajuste los valores.
Para el ejemplo de copia más corto (h)(j): aumenta el valor.
Para el ejemplo de copia más largo (i)(k): disminuye el valor.
Magnitud del cambio por incremento: 0,1 %
4. Haga una copia de prueba.
5. Repita los pasos 2 a 4 anteriores hasta que la separación de la línea (2) (3) del ejemplo de copia presente el valor de referencia.
<Valor de referencia>
Para la dirección de exploración secundaria, separación vertical de la línea (2): dentro de ±1,5%
Para la dirección de exploración principal, separación horizontal de la línea (3): dentro de ±1,5%

---

3. Die Werte einstellen.
Für die kürzere Länge des Kopierbeispiels (h)(j): Den Wert erhöhen.
Für die längere Länge des Kopierbeispiels (i)(k): Den Wert verringern.
Änderung pro Schritt: 0,1%
4. Eine Testkopie erstellen.
5. Die Schritte 2 bis 4 wiederholen, bis der Abstand der Linie (2) (3) des Kopierbeispiels den Bezugswert aufweist.
<Bezugswert>
Subscanrichtung: Vertikaler Abstand der Linie (2): Innerhalb ±1,5%
Hauptscanrichtung: Horizontaler Abstand der Linie (3): Innerhalb ±1,5%

---

3. Regolare i valori.
Per l'esempio di copia di lunghezza inferiore (h)(j): aumenta il valore.
Per l'esempio di copia di lunghezza superiore (i)(k): riduce il valore.
Entità modifica per passo: 0,1 %
4. Eseguire una copia di prova
5. Ripetere le operazioni sopra descritte da 2 a 4 fino a quando lo scostamento della linea (2) (3) dell'esempio di copia riporterà i valori di riferimento.
<Valore di riferimento>
Per l'orientamento della scansione ausiliare, lo scostamento verticale della linea (2) deve essere compreso fra ±1,5%
Per l'orientamento della scansione principale, lo scostamento orizzontale della linea (3) deve essere compreso fra ±1,5%

---

3. 调整设定值。
在长度偏短时　复印样本（h）（j）：调高设定值
在长度偏长时　复印样本（i）（k）：调低设定值
设定值的一个调整单位变化量：0.1%
4. 进行测试复印。
5. 重复上述步骤 2 到 4，直至复印样本上的线（2）、（3）之间的偏移值达到标准值范围内。
〈标准值〉
对于副扫描方向，线（2）的上下偏移值：±1.5% 以内
对于主扫描方向，线（3）的左右偏移值：±1.5% 以内

---

3. 설정치를 조정합니다 .
길이가 짧은 경우 벨크로 (h)(j):설정치를 높입니다 .
길이가 긴 경우 벨크로 (i)(k):설정치를 내립니다 .
1 스텝당 변화량:0.1%
4. 벨크로를 합니다 .
5. 벨크로 선 (2)(3) 의 차이가 기준치내가 될 때까지 2 ~ 4 를 반복합니다 .
＜기준치＞
부주사 방향의 경우 선 (2) 의 상하차이:±1.5% 이내
주주사 방향의 경우 선 (3) 의 좌우차이:±1.5% 이내

---

3. 設定値を調整する。
長さが短い場合コピーサンプル (h)(j):設定値を上げる
長さが長い場合コピーサンプル (i)(k):設定値を下げる
1 ステップ当たりの変化量:0.1%
4. テストコピーを行う。
5. コピーサンプルの線 (2)(3) のずれが基準値内になるまで手順 2 ～ 4 を繰り返す。
＜基準値＞
副走査方向の場合、線 (2) の上下ずれ:±1.5% 以内
主走査方向の場合、線 (3) の左右ずれ:±1.5% 以内

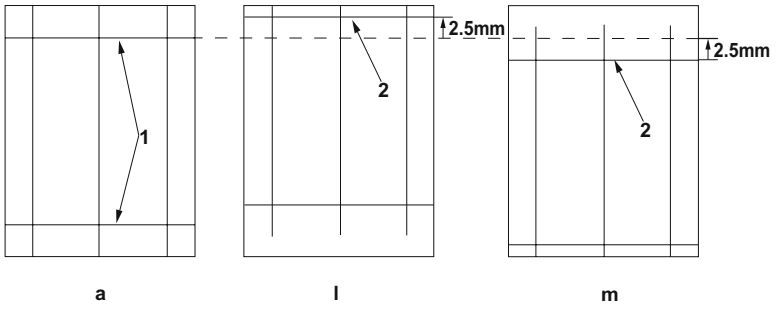

[Checking the leading edge timing]

1. Check the gap between line (1) on original (a) and line (2) of copy example. If the gap exceeds the reference value, adjust the gap according to the following procedure.
<Reference value>
Vertical gap of line (2): within ±2.5 mm

2. Use the maintenance mode U071 to adjust the timing.
Front Head: Adjusts the leading edge timing (front side)
Front Tail: Adjusts the trailing edge timing (front side)
Back Head: Adjusts the leading edge timing (rear side)
Back Tail: Adjusts the trailing edge timing(rear side)

[Vérification de la synchronisation du bord avant]

1. Vérifier l'écart entre la ligne (1) de l'original (a) et la ligne (2) de l'exemple de copie. Si l'écart excède la valeur de référence, le régler selon la procédure suivante.
<Valeur de référence>
Écart vertical de la ligne (2) : ±2,5 mm

2. Pour régler la synchronisation, utilisez le mode entretien U071.
Front Head: Permet de régler la synchronisation du bord de tête (recto)
Front Tail: Permet de régler la synchronisation du bord arrière (recto)
Back Head: Permet de régler la synchronisation du bord de tête (arrière)
Back Tail: Permet de régler la synchronisation du bord arrière (arrière)

[Cambio de la sincronización de borde superior]

1. Compruebe la separación entre la línea (1) del original (a) y la línea (2) del ejemplo de copia. Si la separación supera el valor de referencia, ajústela siguiendo este procedimiento.
<Valor de referencia>
Separación vertical de la línea (2): dentro de ±2,5 mm

2. Para ajustar la sincronización utilice el modo de mantenimiento U071.
Front Head: Ajusta la sincronización del borde superior (anverso).
Front Tail: Ajusta la sincronización del borde inferior (anverso).
Back Head: Ajusta la sincronización del borde superior (reverso).
Back Tail: Ajusta la sincronización del borde inferior (reverso).

[Überprüfen des Vorderkanten-Timings]

1. Den Abstand zwischen der Linie (1) des Originals (a) und der Linie (2) des Kopierbeispiels prüfen. Wenn der Abstand größer als der Bezugswert ist, den Abstand mit dem folgenden Verfahren einstellen.
<Bezugswert>
Vertikaler Abstand der Linie (2): Innerhalb ±2,5 mm

2. Zum Einstellen des Timing den Wartungsmodus U071 verwenden.
Front Head: Zur Einstellung des Vorderkanten-Timing (Vorderseite)
Front Tail: Zur Einstellung des Hinterkanten-Timing (Vorderseite)
Back Head: Zur Einstellung des Vorderkanten-Timing (Rückseite)
Back Tail: Zur Einstellung des Hinterkanten-Timing (Rückseite)

[Controllo della sincronizzazione del bordo principale]

1. Verificare lo scostamento fra la linea (1) sull'originale (a) e la linea (2) dell'esempio di copia. Se lo scostamento supera il valore di riferimento, regolare lo scostamento stesso seguendo questa procedura.
<Valore di riferimento>
Scostamento verticale della linea (2) compreso fra ±2,5 mm

2. Usare la modalità di manutenzione U071 per regolare la sincronizzazione.
Front Head: Regola la sincronizzazione del bordo principale (fronte)
Front Tail: Regola la sincronizzazione del bordo di uscita (fronte)
Back Head: Regola la sincronizzazione del bordo principale (retro)
Back Tail: Regola la sincronizzazione del bordo di uscita (retro)

[确认前端定时调整]

1. 确认原稿 (a) 上的线 (1) 和复印样本上的线 (2) 之间的偏移值。如果偏移值超过标准值，则按照下列步骤进行调整。
〈 标准值 〉
线 (2) 的上下偏移值 : ±2.5mm 以内

2. 使用维修模式 U071 调整定时。
Front Head : 调整前端对位 (正面)
Front Tail : 调整后端对位 (正面)
Back Head : 调整前端对位 (反面)
Back Tail : 调整后端对位 (反面)

[선단 타이밍확인]

1. 원고 (a) 선 (1) 과 벨크로 선 (2) 의 차이를 확인합니다 . 차이가 기준치 외의 경우 다음 순서로 조정을 합니다 .
< 기준치 >
선 (2) 의 상하차이 : ±2.5mm 이내

2. 메인터넌스 모드 U071 을 세트하고 조정을 합니다 .
Front Head : 선단 타이밍 (표면) 을 조정합니다 .
Front Tail : 후단 타이밍 (표면) 을 조정합니다 .
Back Head : 선단 타이밍 (뒷면) 을 조정합니다 .
Back Tail : 후단 타이밍 (뒷면) 을 조정합니다 .

[先端タイミング確認]

1. 原稿 (a) の線 (1) とコピーサンプルの線 (2) のずれを確認する。ずれが基準値外の場合、次の手順で調整を行う。
< 基準値 >
線 (2) の上下ずれ : ±2.5mm 以内

2. メンテナンスモード U071 をセットし、調整を行う。
Front Head : 先端タイミング (表面) を調整する
Front Tail : 後端タイミング (表面) を調整する
Back Head: 先端タイミング (裏面) を調整する
Back Tail: 後端タイミング (裏面) を調整する

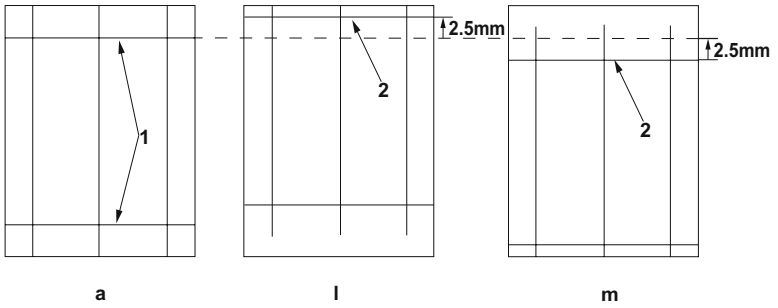

3. Adjust the values.
For the shorter leading edge timing, copy examples (l): Decreases the value.
For the longer leading edge timing, copy examples (m): Increases the value.
Amount of change per step: 0.21 mm
4. Perform a test copy.
5. Repeat the steps 2 to 4 above until the gap of line (2) of copy example shows the reference value.
<Reference value>
Vertical gap of line (2): within ±2.5 mm

---

3. Régler les valeurs.
Pour les exemples de copie dont la synchronisation du bord avant est plus rapide (l) : diminuer la valeur.
Pour les exemples de copie dont la synchronisation du bord avant est plus lente (m) : augmenter la valeur.
Changement par graduation d'échelle : 0,21 mm
4. Effectuer une copie de test.
5. Répéter les étapes 2 à 4 jusqu'à ce que l'écart de la ligne (2) de l'exemple de copie indique la valeur de référence.
<Valeur de référence>
Écart vertical de la ligne (2) : ±2,5 mm

---

3. Ajuste los valores.
Para una sincronización más rápida de extremo guía, ejemplos de copia (l): disminuye el valor.
Para una sincronización más lenta de extremo guía, ejemplos de copia (m): aumenta el valor.
Magnitud del cambio por incremento: 0,21 mm
4. Haga una copia de prueba.
5. Repita los pasos 2 a 4 anteriores hasta que la separación de la línea (2) del ejemplo de copia presente el valor de referencia.
<Valor de referencia>
Separación vertical de la línea (2): dentro de ±2,5 mm

---

3. Die Werte einstellen.
Für den schnelleren Vorderkantentakt, Kopierbeispiel (l): Den Wert verringern.
Für den langsameren Vorderkantentakt, Kopierbeispiel (m): Den Wert erhöhen.
Änderung pro Schritt: 0,21 mm
4. Eine Testkopie erstellen.
5. Die Schritte 2 bis 4 wiederholen, bis der Abstand der Linie (2) des Kopierbeispiels den Bezugswert aufweist.
<Bezugswert>
Vertikaler Abstand der Linie (2): Innerhalb ±2,5 mm

---

3. Regolare i valori.
Per accelerare la fasatura del bordo di entrata, esempi di copia (l): riduce il valore.
Per rallentare la fasatura del bordo di entrata, esempi di copia (m): aumenta il valore.
Entità modifica per passo: 0,21 mm
4. Eseguire una copia di prova
5. Ripetere le operazioni sopra descritte da 2 a 4 fino a quando lo scostamento della linea (2) dell'esempio di copia riporterà i valori di riferimento.
<Valore di riferimento>
Scostamento verticale della linea (2) compreso fra ±2,5 mm

---

3. 调整设定值。
在前端定时偏快时　复印样本(l)：调低设定值
在前端定时偏慢时　复印样本(m)：调高设定值
设定值的一个调整单位变化量：0.21mm
4. 进行测试复印。
5. 重复上述步骤 2 到 4，直至复印样本上的线(2)的偏移值达到标准值范围内。
〈标准值〉
线(2)的上下偏移值：±2.5mm 以内

---

3. 설정치를 조정합니다 .
선단 타이밍이 빠른 경우 벨크로 (l):설정치를 내립니다 .
선단 타이밍이 늦은 경우 벨크로 (m):설정치를 올립니다 .
1 스텝당 변화량:0.21mm
4. 벨크로를 합니다 .
5. 벨크로 선 (2) 의 차이가 기준치내가 될 때까지 2 ~ 4 를 반복합니다 .
<기준치>
선 (2) 의 상하차이:±2.5mm 이내

---

3. 設定値を調整する。
先端タイミングが短い場合コピーサンプル (l):設定値を下げる。
先端タイミングが長い場合コピーサンプル (m):設定値を上げる。
1 ステップ当たりの変化量:0.21mm
4. テストコピーを行う。
5. コピーサンプルの線 (2) のずれが基準値内になるまで手順 2 ～ 4 を繰り返す。
＜基準値＞
線 (2) の上下ずれ:±2.5mm 以内

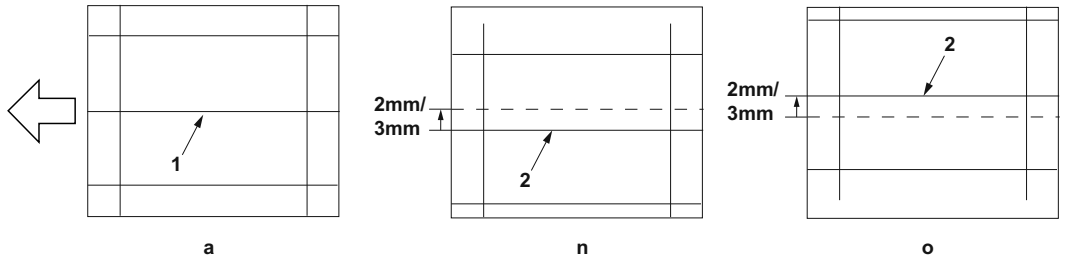

[Checking the center line]

1. Check the gap between center line (1) on original (a) and center line (2) of copy example. If the gap exceeds the reference value, adjust the gap according to the following procedure.
<Reference value>
Horizontal difference of center line (2) for the single copying: ±2.0 mm
Horizontal difference of center line (2) for the duplex copying: ±3.0 mm

2. Use the maintenance mode U072 to adjust the timing.
Front: Adjusts the center line (front side)
Back: Adjusts the center line (rear side)

[Vérification de la ligne médiane]

1. Vérifier l'écart entre l'axe (1) de l'original (a) et l'axe (2) de l'exemple de copie. Si l'écart excède la valeur de référence, le régler selon la procédure suivante.
<Valeur de référence>
Différence horizontale de l'axe (2) pour la copie recto : ±2,0 mm
Différence horizontale de l'axe (2) pour la copie recto-verso : ±3,0 mm

2. Pour régler la ligne médiane, utiliser le mode entretien U072.
Front: Permet de régler l'axe (recto)
Back: Permet de régler l'axe (arrière)

[Verificación de la línea central]

1. Compruebe la separación entre la línea de centro (1) del original (a) y la línea de centro (2) del ejemplo de copia. Si la separación supera el valor de referencia, ajústela siguiendo este procedimiento.
<Valor de referencia>
Diferencia horizontal de la línea de centro (2) para el copiado por una cara: ±2,0 mm
Diferencia horizontal de la línea de centro (2) para el copiado dúplex: ±3,0 mm

2. Para ajustar la línea central utilice el modo de mantenimiento U072.
Front: ajusta la línea central (anverso)
Back: ajusta la línea central (reverso)

[Überprüfen der Mittellinie]

1. Den Abstand zwischen der Mittellinie (1) des Originals (a) und der Mittellinie (2) des Kopierbeispiels prüfen. Wenn der Abstand größer als der Bezugswert ist, den Abstand mit dem folgenden Verfahren einstellen.
<Bezugswert>
Horizontaler Unterschied der Mittellinie (2) für die Einzelkopie: ±2,0 mm
Horizontaler Unterschied der Mittellinie (2) für die Duplexkopie: ±3,0 mm

2. Zum Einstellen der Mittellinie den Wartungsmodus U072 verwenden.
Front: Zur Einstellung der Mittellinie (Vorderseite)
Back: Zur Einstellung der Mittellinie (Rückseite)

[Controllo della linea centrale]

1. Verificare lo scostamento fra la linea centrale (1) sull'originale (a) e la linea centrale (2) dell'esempio di copia. Se lo scostamento supera il valore di riferimento, regolare lo scostamento stesso seguendo questa procedura.
<Valore di riferimento>
Differenza orizzontale della linea centrale (2) per la copia singola: ±2,0 mm
Differenza orizzontale della linea centrale (2) per la copia duplex: ±3,0 mm

2. Usare la modalità di manutenzione U072 per regolare la linea centrale.
Front: Regola la linea centrale (fronte)
Back: Regola la linea centrale (retro)

[确认中心线]

1. 确认原稿 (a) 中心线 (1) 和复印样本中心线 (2) 之间的偏移值。如果偏移值超过标准值，则按照下列步骤进行调整。
〈标准值〉单面复印时，中心线 (2) 的左右偏移值 : ±2.0mm 以内
双面复印时，中心线 (2) 的左右偏移值 : ±3.0mm 以内

2. 使用维修模式 U072 调整中心线。
Front : 中心位置 (正面) 的调整
Back : 中心位置 (反面) 的调整

[센터 라인 확인]

1. 원고 (a) 센터라인 (1) 과 벨크로 센터라인 (2) 의 차이를 확인합니다 . 차이가 기준치 외의 경우 다음 순서로 조정합니다 .
<기준치>단면의 경우 센터라인 (2) 의 좌우차이 : ±2.0mm 이내
양면의 경우 센터라인 (2) 의 좌우차이 : ±3.0mm 이내

2. 메인터넌스 모드 U072 을 세트하고 조정을 합니다 .
Front: 센터 위치 (표면) 의 조정
Back: 센터 위치 (뒷면) 의 조정

[センターライン確認]

1. 原稿 (a) の中心線 (1) とコピーサンプルの中心線 (2) のずれを確認する。ずれが基準値外の場合、次の手順で調整を行う。
＜基準値＞片面の場合、中心線 (2) の左右ずれ : ±2.0mm 以内
両面の場合、中心線 (2) の左右ずれ : ±3.0mm 以内

2. メンテナンスモード U072 をセットし、調整を行う。
Front : センター位置 (表面) の調整
Back : センター位置 (裏面) の調整

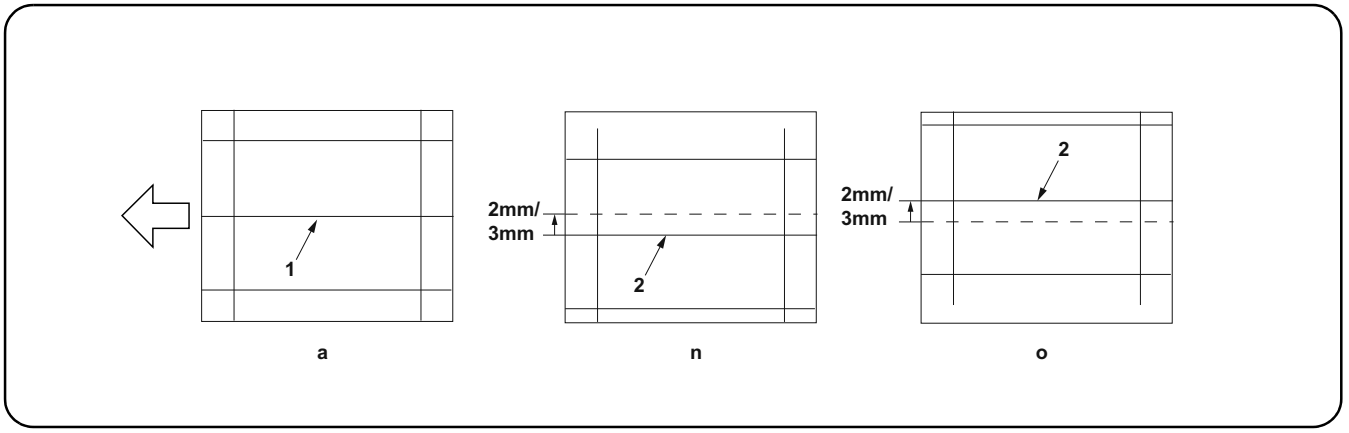

3. Adjust the values.
If the center moves more front, copy example (n): Decreases the value.
If the center moves inner, copy sample (o): Increases the value.
Amount of change per step: 0.085 mm
4. Perform a test copy.
5. Repeat the steps 2 to 4 above until the gap of line (2) of copy example shows the reference value.
<Reference value>
Horizontal difference of center line (2) for the single copying: ±2.0 mm
Horizontal difference of center line (2) for the duplex copying: ±3.0 mm

---

3. Régler les valeurs.
Pour l'exemple de copie (n) dont l'axe se déplace davantage vers l'avant : diminuer la valeur.
Pour l'exemple de copie (o) dont l'axe se déplace vers l'intérieur : augmenter la valeur.
Changement par graduation d'échelle : 0,085 mm
4. Effectuer une copie de test.
5. Répéter les étapes 2 à 4 jusqu'à ce que l'écart de la ligne (2) de l'exemple de copie indique la valeur de référence.
<Valeur de référence>
Différence horizontale de l'axe (2) pour la copie recto : ±2,0 mm
Différence horizontale de l'axe (2) pour la copie recto-verso : ±3,0 mm

---

3. Ajuste los valores.
Si el centro se desplaza más hacia el frente, ejemplo de copia (n): disminuye el valor.
Si el centro se desplaza hacia dentro, ejemplo de copia (0): aumenta el valor.
Magnitud del cambio por incremento: 0,085 mm
4. Haga una copia de prueba.
5. Repita los pasos 2 a 4 anteriores hasta que la separación de la línea (2) del ejemplo de copia presente el valor de referencia.
<Valor de referencia>
Diferencia horizontal de la línea de centro (2) para el copiado por una cara: ±2,0 mm
Diferencia horizontal de la línea de centro (2) para el copiado dúplex: ±3,0 mm

---

3. Die Werte einstellen.
Wenn die Mitte nach vorne verlagert ist, Kopierbeispiel (n): Den Wert verringern.
Wenn die Mitte nach innen verlagert ist, Kopierbeispiel (o): Den Wert erhöhen.
Änderung pro Schritt: 0,085 mm
4. Eine Testkopie erstellen.
5. Die Schritte 2 bis 4 wiederholen, bis der Abstand der Linie (2) des Kopierbeispiels den Bezugswert aufweist.
<Bezugswert>
Horizontaler Unterschied der Mittellinie (2) für die Einzelkopie: ±2,0 mm
Horizontaler Unterschied der Mittellinie (2) für die Duplexkopie: ±3,0 mm

---

3. Regolare i valori.
Se il centro si sposta più avanti, esempio di copia (n): riduce il valore.
Se il centro si sposta verso l'interno, esempio di copia (o): aumenta il valore.
Entità modifica per passo: 0,085 mm
4. Eseguire una copia di prova
5. Ripetere le operazioni sopra descritte da 2 a 4 fino a quando lo scostamento della linea (2) dell'esempio di copia riporterà i valori di riferimento.
<Valore di riferimento>
Differenza orizzontale della linea centrale (2) per la copia singola: ±2,0 mm
Differenza orizzontale della linea centrale (2) per la copia duplex: ±3,0 mm

---

3. 调整设定值。
当中心向前偏移时　复印样本（n）：调低设定值
当中心向内偏移时　复印样本（o）：调高设定值
设定值的一个调整单位变化量：0.085㎜
4. 进行测试复印。
5. 重复上述步骤 2 到 4，直至复印样本上的线（2）的偏移值达到标准值范围内。
〈标准值〉
单面复印时，中心线（2）的左右偏移值：±2.0㎜ 以内
双面复印时，中心线（2）的左右偏移值：±3.0㎜ 以内

---

3. 설정치를 조정합니다 .
센터가 바로 앞으로 틀려 있는 경우 샘플 카피 (n):설정치를 내립니다 .
센터가 안으로 틀려 있는 경우 샘플 카피 (o) : 설정치를 높입니다 .
1 스텝당 변화량:0.085mm
4. 벨크로를 합니다 .
5. 벨크로 센터라인 (2) 차이가 기준치 내가 될 때까지 순서 2 ~ 4 를 반복합니다 .
＜기준치＞
단면의 경우 센터라인 (2) 의 죄우차이:±2.0mm 이내
양면의 경우 센터라인 (2) 의 좌우차이:±3.0mm 이내

---

3. 設定値を調整する。
センターが手前にずれている場合コピーサンプル (n):設定値を下げる。
センターが奥にずれている場合コピーサンプル (o) 設定値を上げる。
1 ステップ当たりの変化量:0.085㎜
4. テストコピーを行う。
5. コピーサンプルの中心線 (2) ずれが基準値内になるまで手順 2 ～ 4 を繰り返す。
＜基準値＞
片面の場合、中心線 (2) の左右ずれ:±2.0㎜ 以内
両面の場合、中心線 (2) の左右ずれ:±3.0㎜ 以内

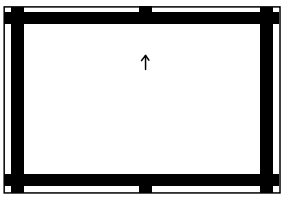

[Automatic adjustment using the original for adjustment]
If there is no DP auto adjustment origina

1. Set the maintenance mode U411 and press [DP Auto Adj] to output the adjustment original.
2. Set the printed original on the contact glass and press the Start key.
3. Set the original on the DP face up and press the Start key to carry out surface adjustment.
4. If "OK" appears on the display, the adjustment is completed.
   If the number appears, the adjustment failed. Check the original set position and repeat steps 2 and 3 until "OK" appears.
   For details, see the service manual.

[Réglage automatique en utilisant l'original pour effectuer le réglage]
Si la machine n'est pas pourvue de la fonction réglage automatique d'original du DP

1. Passez en mode maintenance U411 et appuyez sur [DP Auto Adj] pour imprimer l'original de réglage.
2. Placer l'original qui vient d'être imprimé sur la vitre d'exposition et appuyer sur la touche Start.
3. Placer l'original sur le DP côté imprimé en haut et appuyer sur la touche Start pour procéder au réglage de la surface.
4. Si le message "OK" apparaît sur l'affichage, le réglage est terminé. Si le numéro apparaît, le réglage a échoué. Vérififer la position de l'original et recommencer les opérations 2 et 3 jusqu'à ce que le message "OK" apparaisse.
   Pour plus de details, se reporter au manuel d'entretien.

[Ajuste automático utilizando el original para el ajuste]
Si no existe el original de ajuste automático del DP

1. Configure el modo de mantenimiento U411 y pulse [DP Auto Adj] para imprimir el original de ajuste.
2. Coloque el original impreso sobre el cristal de contacto y pulse la tecla de Start.
3. Coloque el original en el DP cara arriba y pulse la tecla de Start para realizar un ajuste de anverso.
4. Si aparece "OK" en la pantalla significa que el ajuste ha sido realizado. Si aparece el número, el ajuste ha fallado. Compruebe la posición ajustada del original y repita los pasos 2 y 3 hasta que aparezca "OK" en la pantalla.
   Para mas detalles, lea el manual de servicio.

[Automatische Einstellung mithilfe des Originals]
Falls keine automatische Einstellung des Originals des DP vorhanden ist

1. Aktivieren Sie den Wartungsmodus U411 und wählen Sie [DP Auto Adj], um das Original für die Anpassung auszudrucken.
2. Das ausgedruckte Original auf das Kontaktglas legen und die Start-Taste betätigen.
3. Das Original mit der Druckseite nach oben einlegen und die Start-Taste betätigen, um die Oberflächeneinstellung ausführen zu lassen.
4. Wenn am Display "OK" angezeigt wird, ist die Einstellung abgeschlossen. Wenn die Zahl angezeigt wird, ist die Einstellung fehlgeschlagen. Überprüfen Sie die Originalpositionierung und wiederholen Sie Schritte 2 und 3, bis "OK" angezeigt wird.
   Weitere Einzelheiten siehe Wartungsanleitung.

[Regolazione automatica eseguita con l'originale]
Se non è presente l'autoregolazione originale DP

1. Impostare la modalità manutenzione U411, quindi premere [DP Auto Adj] per stampare l'originale da utilizzare per la regolazione.
2. Posizionare l'originale stampato sul vetro di appoggio e premere il tasto di Start.
3. Posizionare l'originale sul DP rivolto verso l'alto e premere il tasto di Start per eseguire la regolazione della superficie.
4. Se "OK" appare sul display, la regolazione è completata. Se si visualizza il numero, la regolazione non è riuscita. Verificare la posizione di impostazione dell'originale e ripetere le operazioni 2 e 3 fino a quando appare "OK".
   Per ulteriori dettagli leggere il manuale d'istruzioni.

[通过调整用原稿进行自动调整]
没有 DP 调整用原稿时

1. 进入维修保养模式 U411，选择 [DP Auto Adj]，输出测试原稿。
2. 将输出的原稿放在稿台上，按 Start 键。
3. 将原稿面朝上放在 DP 主机上，按 Start 键以进行正面的调整。
4. 如果屏幕上出现 "OK"（完成），则表示调整完成。
   如果出现数字，则调整失败。检查原稿设定位置并重复步骤 2 和 3，直到 "OK"（完成）出现。
   详细内容请参照维修手册。

[조정용 원고를 이용한 자동조정]
DP 조정용 원고가 없는 경우

1. 메인터넌스 모드 U411 을 설정하고 [DP Auto Adj] 를 눌러 조정된 원고를 출력합니다 .
2. 출력한 원고를 원고 유리에 장착하고 시작 키를 누릅니다 .
3. 원고를 FaceUp 으로 DP 본체로 세트하고 시작 키를 눌러 표면조정을 합니다 .
4. 디스플레이에 "OK" 가 표시되면 조정완료가 됩니다 .
   숫자가 나타나면 조정이 실패했습니다 . 원고 장착위치를 확인하고 "OK" 가 표시될 때까지 순서 2 ~ 3 를 반복합니다 .
   상세는 서비스 매뉴얼을 참조

[調整用原稿による自動調整]
DP 調整用原稿が無い場合

1. メンテナンスモード U411 をセットし、[DP Auto Adj] を押し原稿を出力する。
2. 出力した原稿をコンタクトガラス上にセットし、Start キーを押す。
3. 原稿を FaceUp で DP へセットし、Start キーを押し、表面の調整を行う。
4. ディスプレイに「OK」が表示されれば調整完了となる。
   数字が表示された場合は調整失敗である。原稿のセット位置を確認し、「OK」が表示されるまで手順 2 ～ 3 を繰り返す。
   詳細はサービスマニュアルを参照のこと。

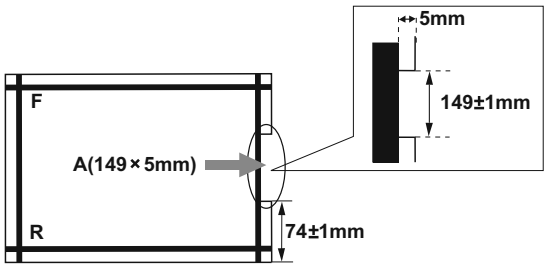

Using a DP auto adjustment original

1. Direct F and R of the DP auto adjustment original upward, and set the original from the place where F and R are marked.
2. Set the maintenance mode U411. Press the [DP FU(ChartB)] and the Start key in that order to carry out surface adjustment.
3. If "OK" appears on the display, the adjustment is completed.
If the number appears, the adjustment failed. Check the original set position and repeat steps 1 and 2 until "OK" appears.
For details, see the service manual.

Avec la fonction réglage automatique d'original du DP

1. Diriger F (avant) et R (arrière) de la fonction de réglage automatique d'original du DP vers le haut, puis placer l'original à partir de l'emplacement des repères F et R.
2. Passer au mode maintenance U411. Appuyer sur les touches [DP FU(ChartB)] et Start dans cet ordre pour procéder au réglage de la surface.
3. Si le message "OK" apparaît sur l'affichage, le réglage est terminé. Si le numéro apparaît, le réglage a échoué. Vérififer la position de l'original et recommencer les opérations 1 et 2 jusqu'à ce que le message "OK" apparaisse.
Pour plus de details, se reporter au manuel d'entretien.

Uso del original de ajuste automático del DP

1. Dirija F y R del original de ajuste automático del DP hacia arriba, y coloque el original a partir del sitio en que están marcados F y R.
2. Entre en el modo de mantenimiento U411. Pulse las teclas [DP FU(ChartB)] y la tecla de Start, en ese orden, para realizar el ajuste de anverso.
3. Si aparece "OK" en la pantalla significa que el ajuste ha sido realizado. Si aparece el número, el ajuste ha fallado. Compruebe la posición ajustada del original y repita los pasos 1 y 2 hasta que aparezca "OK" en la pantalla.
Para mas detalles, lea el manual de servicio.

Gebrauch der automatischen Einstellung des Originals des DP

1. F und R der automatischen Einstellung des Originals des DP nach oben zeigen und das Original an die mit F und R markierte Stelle setzen.
2. Den Wartungsmodus U411 einschalten. [DP FU(ChartB)] und die Start-Taste in dieser Reihenfolge betätigen, um die Oberflächeneinstellung ausführen zu lassen.
3. Wenn am Display "OK" angezeigt wird, ist die Einstellung abgeschlossen. Wenn die Zahl angezeigt wird, ist die Einstellung fehlgeschlagen. Überprüfen Sie die Originalpositionierung und wiederholen Sie Schritte 1 und 2, bis "OK" angezeigt wird.
Weitere Einzelheiten siehe Wartungsanleitung.

Uso di un'autoregolazione originale DP

1. Orientare F e R dell'autoregolazione originale DP verso l'alto e disporre l'originale rispetto ai punti in cui sono contrassegnati F e R.
2. Impostare la modalità manutenzione U411. Premere nell'ordine [DP FU(ChartB)] e il tasto di Start, per eseguire la regolazione della superficie.
3. Se "OK" appare sul display, la regolazione è completata. Se si visualizza il numero, la regolazione non è riuscita. Verificare la posizione di impostazione dell'originale e ripetere le operazioni 1 e 2 fino a quando appare "OK".
Per ulteriori dettagli leggere il manuale d'istruzioni.

使用 DP 自动调整用稿时

1. 将 DP 自动调整原稿的 F 和 R 向上，并把标有 F 和 R 的一侧插入 DP 来设定原稿。
2. 设置维护模式 U411，按顺序按 [DP FU(ChartB)]、Start 键以进行正面的调整。
3. 如果屏幕上出现 ”OK”（完成），则表示调整完成。
如果出现数字，则调整失败。检查原稿设定位置并重复步骤 1 和 2，直到 ”OK”（完成）出现。
详细内容请参照维修手册。

DP 자동조정용 원고를 사용하는 경우

1. DP 자동조정원고 F, R 을 위로 향하게 하고 F, R 이 쓰여져 있는 쪽에서 DP 본체로 세트합니다 .
2. 메인터넌스 모드 U411을 세트하고 [DP FU(ChartB)], 시작키의 순서로 눌러 표면 조정을 합니다 .
3. 디스플레이에 “OK” 가 표시되면 조정완료가 됩니다 .
숫자가 나타나면 조정이 실패했습니다 . 원고 장착위치를 확인하고 “OK” 가 표시될 때까지 순서 1 ~ 2 를 반복합니다 .
상세는 서비스 매뉴얼을 참조 .

DP 自動調整原稿を使用する場合

1. DP 自動調整原稿の F、R を上に向け、F、R が書かれている方から DP へセットする。
2. メンテナンスモード U411 をセットし、[DP FU(ChartB)]、Start キーの順に押し、表面の調整を行う。
3. ディスプレイに「OK」が表示されれば調整完了となる。
数字が表示された場合は調整失敗である。原稿のセット位置を確認し、「OK」が表示されるまで手順 1 ～ 2 を繰り返す
詳細はサービスマニュアルを参照のこと。

DP-7160
DP-7170

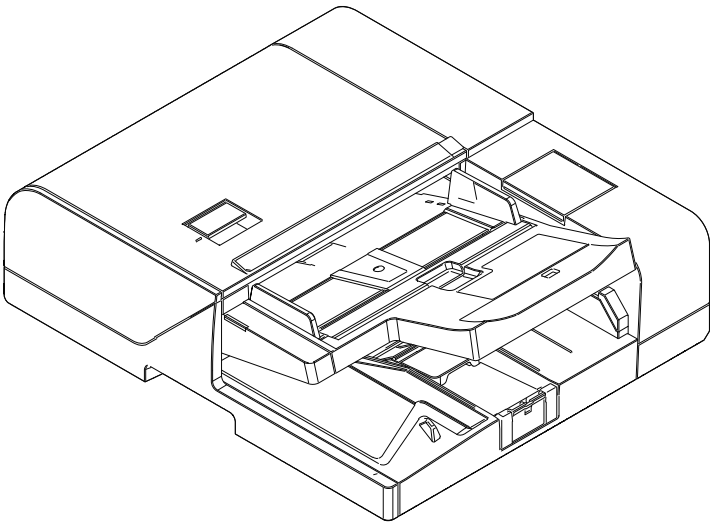

INSTALLATION GUIDE

GUIDE D'INSTALLATION

GUÍA DE INSTALACION

INSTALLATIONSANLEITUNG

GUIDA ALL'INSTALLAZIONE

安装手册

설치안내서

設置手順書

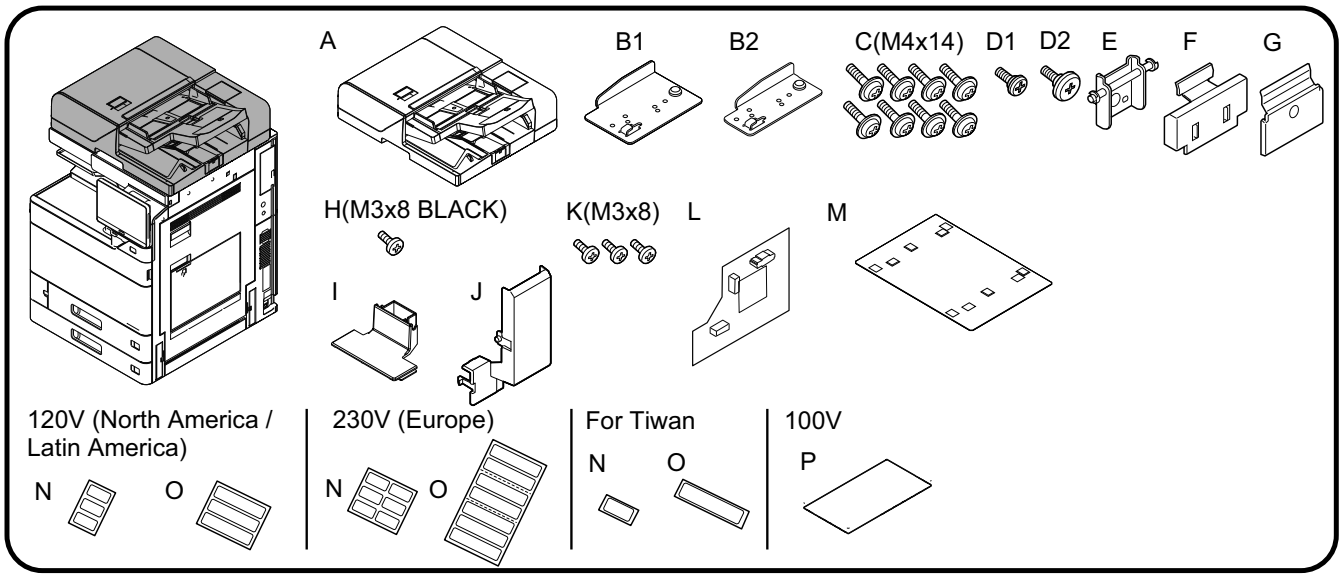

(EN) Be sure to remove any tape and/or cushioning materials from the parts supplied.

(FR) Veillez à retirer les morceaux de bande adhésive et/ou les matériaux de rembourrage des pièces fournies.

(ES) Asegúrese de quitar todas las cintas y/o material amortiguador de las partes suministradas.

(DE) Stellen Sie sicher, dass sämtliche Klebebänder und/oder Polstermaterial von den gelieferten Teilen entfernt wurden.

(IT) Rimuovere tutti i nastri adesivi e/o i materiali di protezione dalle parti fornite.

(ZHCN) 如果附属品上带有固定胶带，缓冲材料时务必揭下。

(KO) 동봉품에 고정 테이프 , 완충재가 붙어 있는 경우에는 반드시 제거하십시오.

(JA) 同梱品に固定テープ、緩衝材がついている場合は、必ず取り外すこと。

①

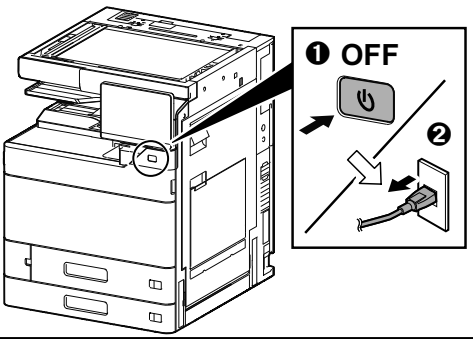

②

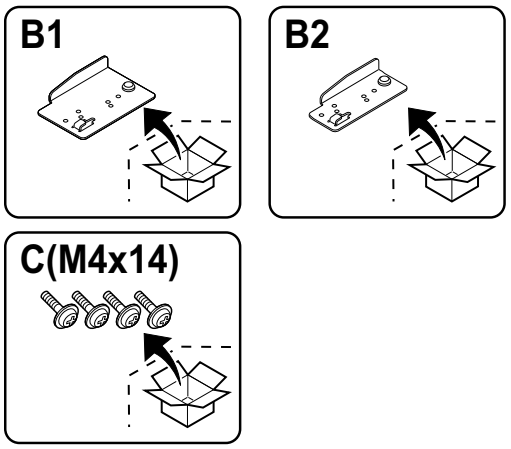

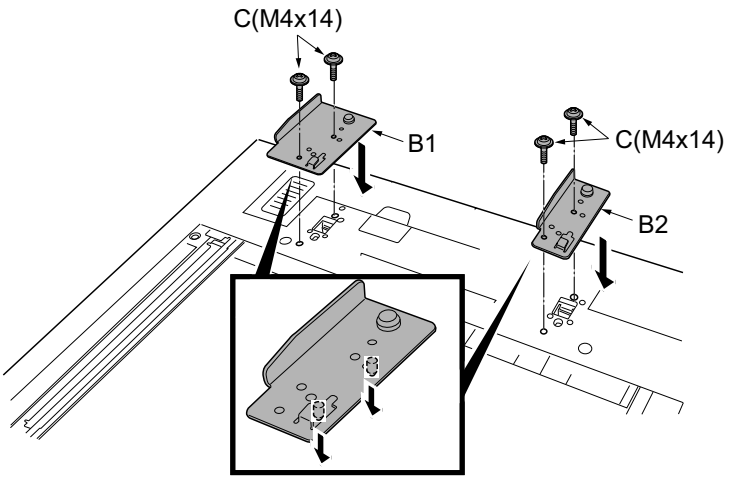

③

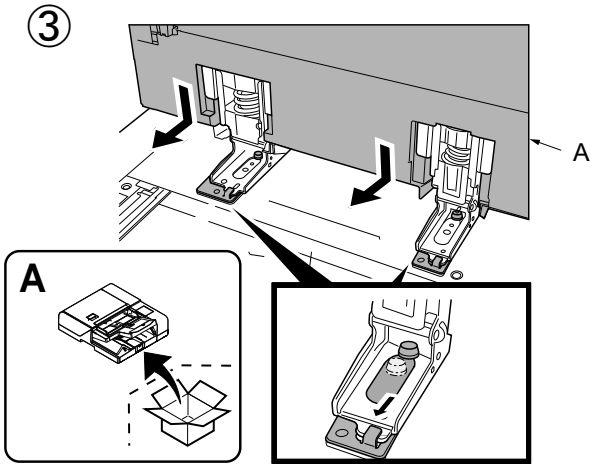

④

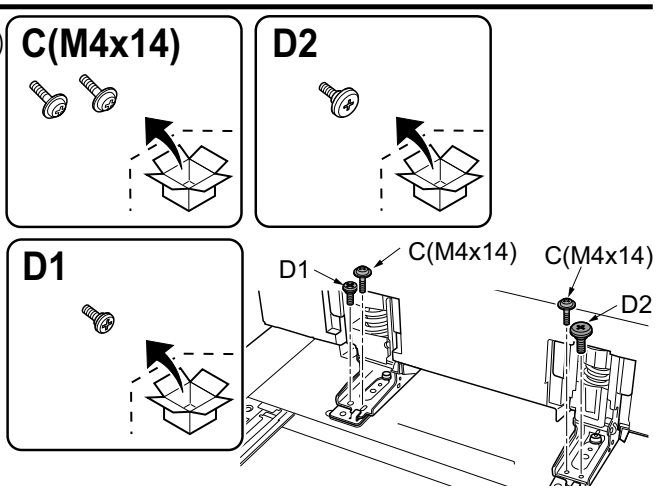

⑤

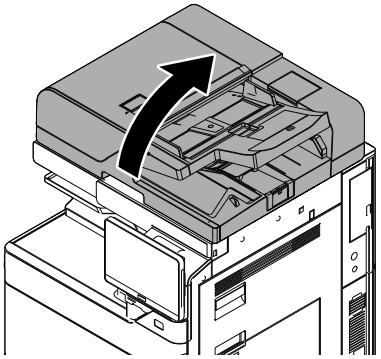

⑥

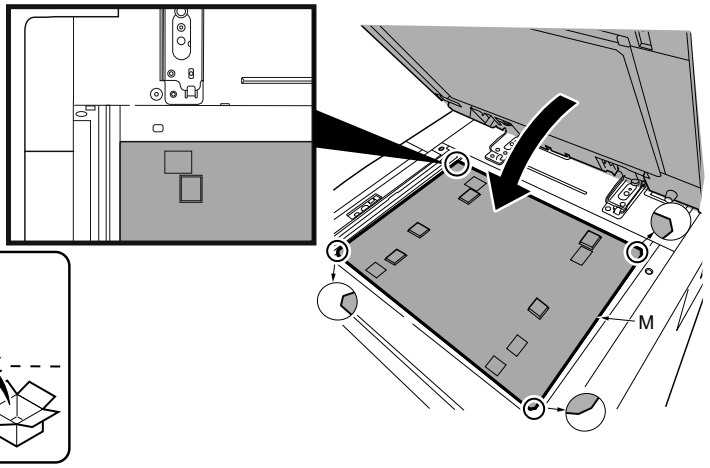

⑦

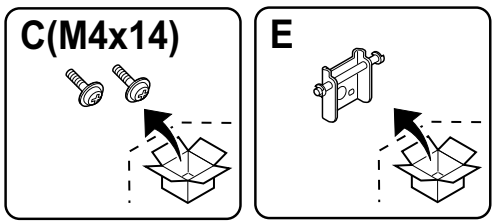

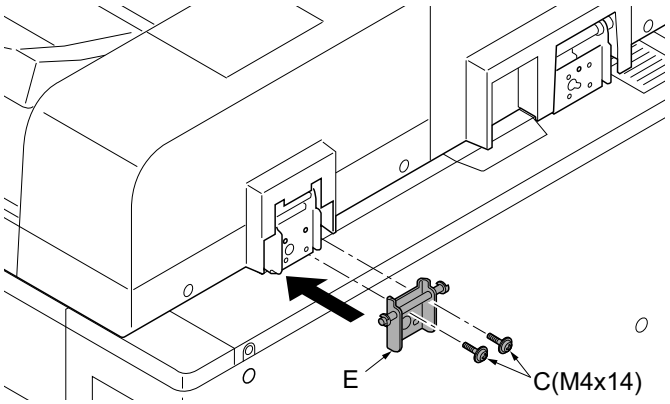

⑦-1

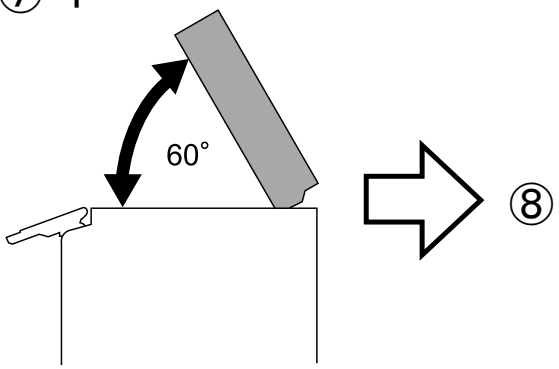

⑦-2

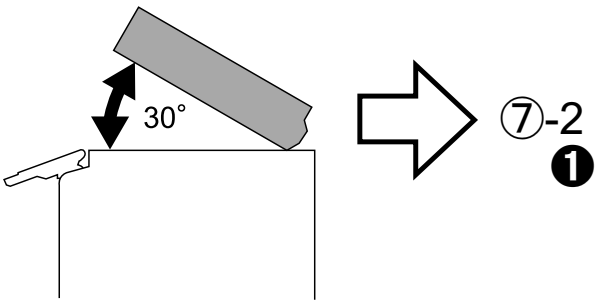

⑦-2 ❶

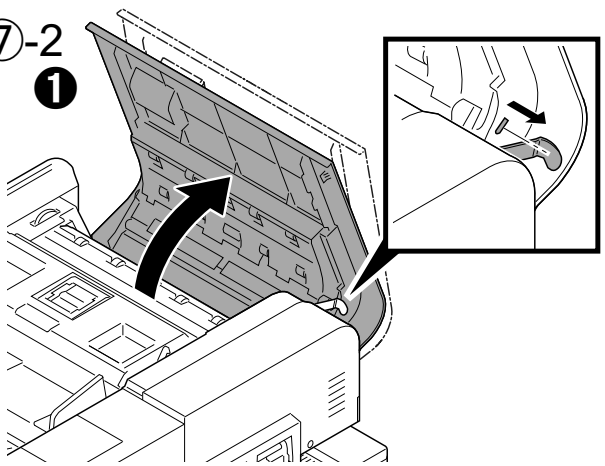

❷

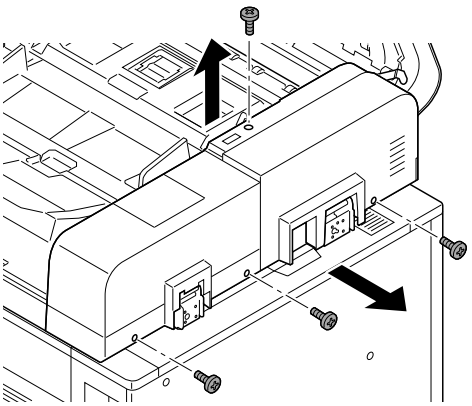

❸

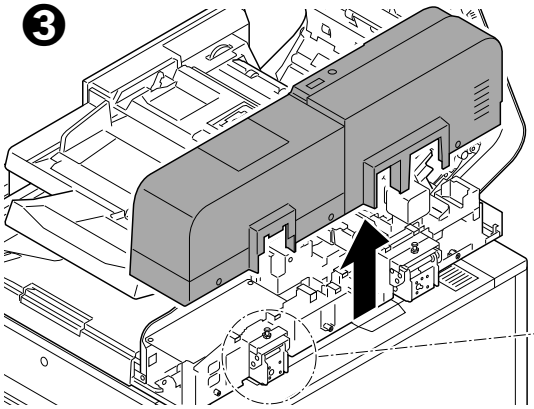

❹

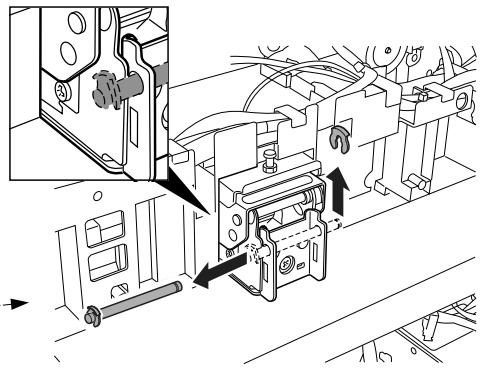

❺

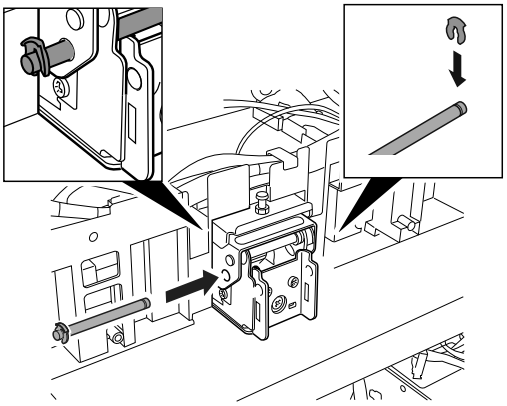

❻

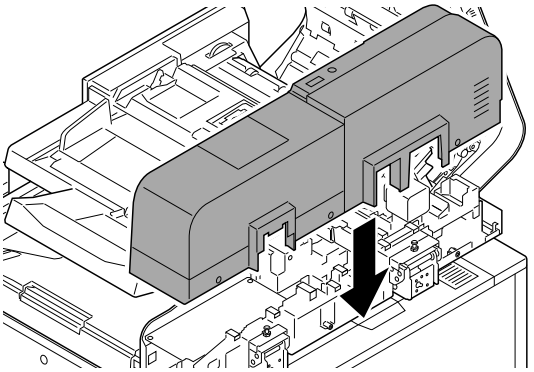

❼

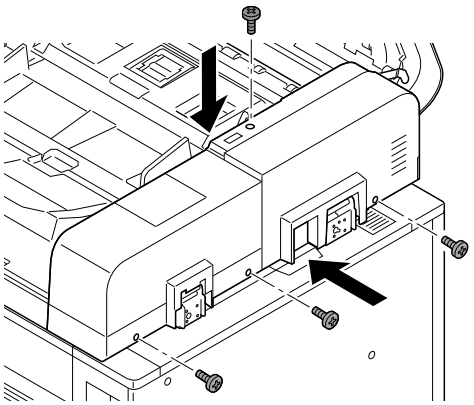

❽

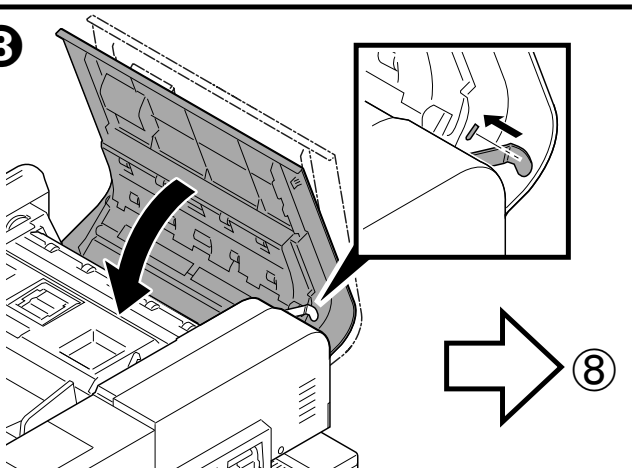

⑧

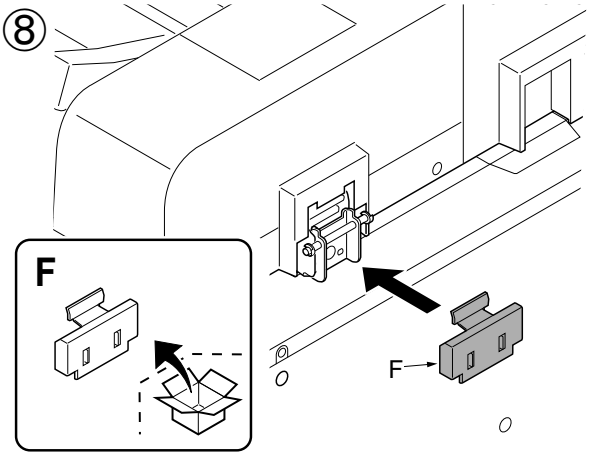

⑨

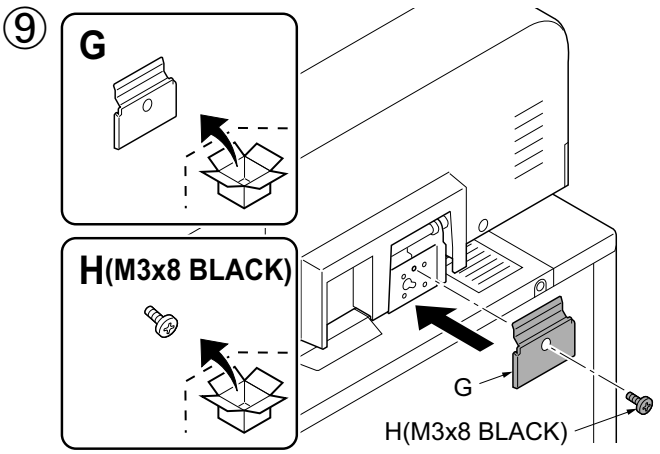

⑩

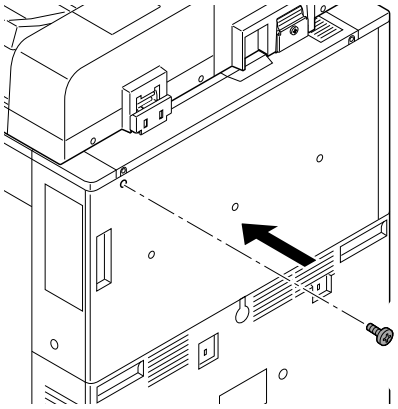

⑪

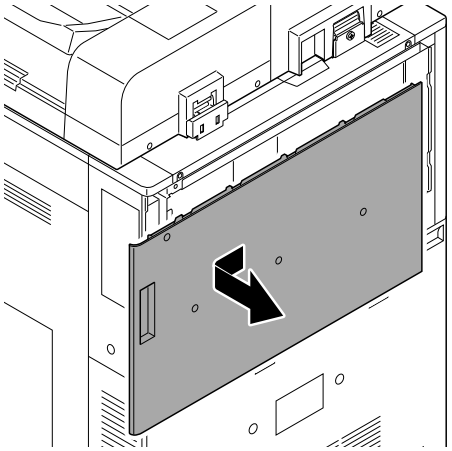

⑫

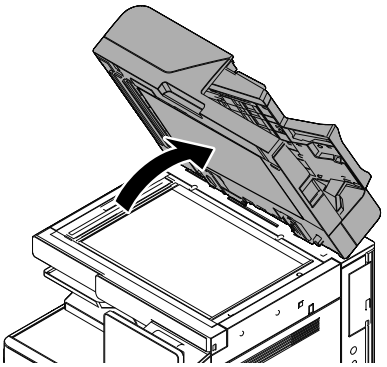

⑬

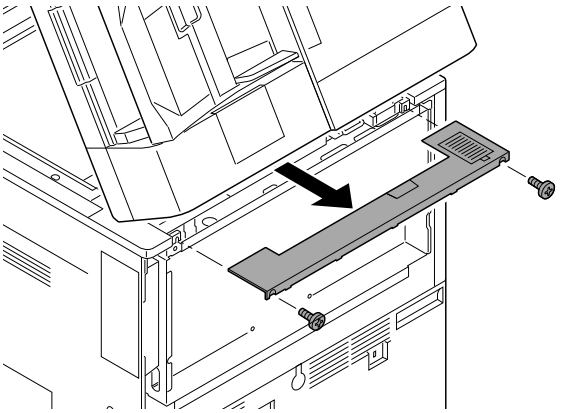

⑭

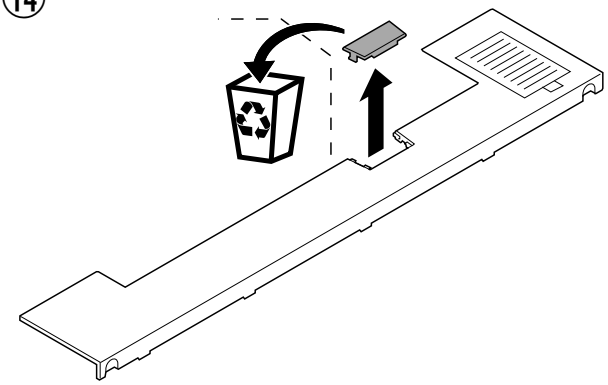

⑮

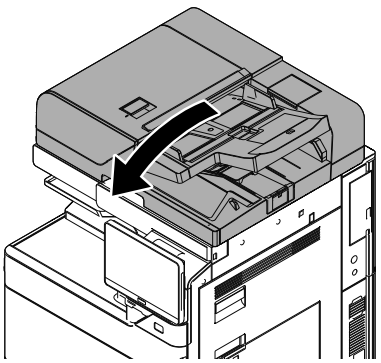

⑯

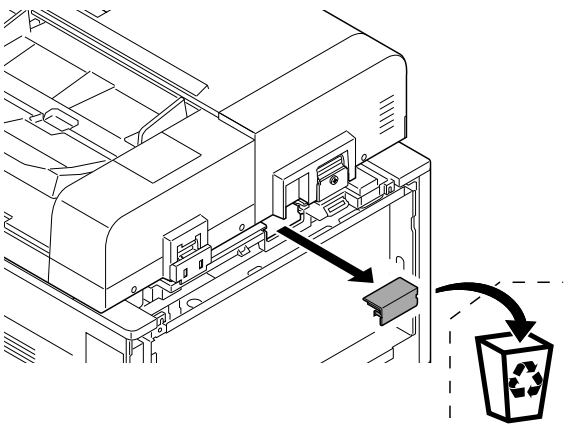

⑰

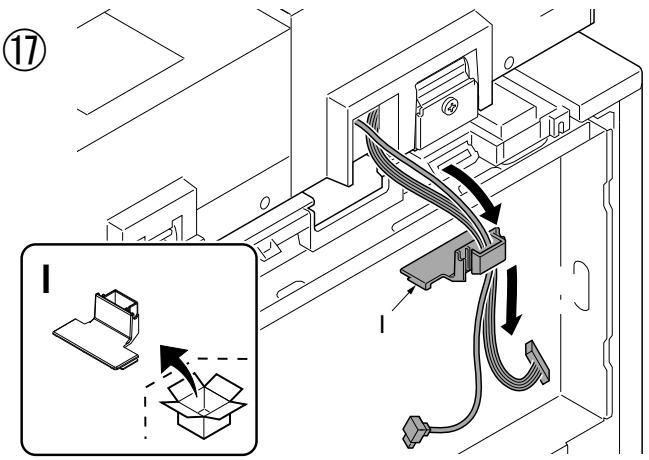

⑱

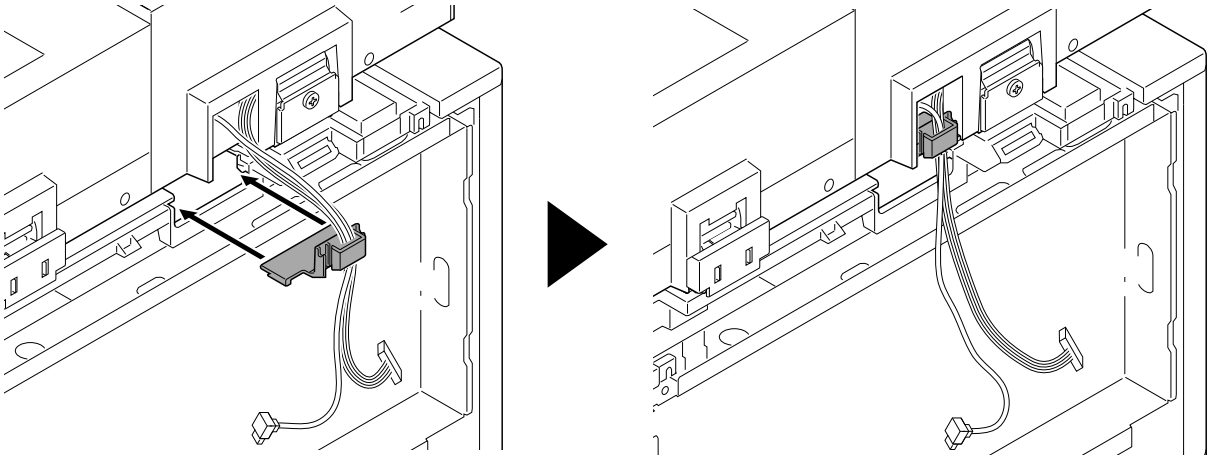

⑲

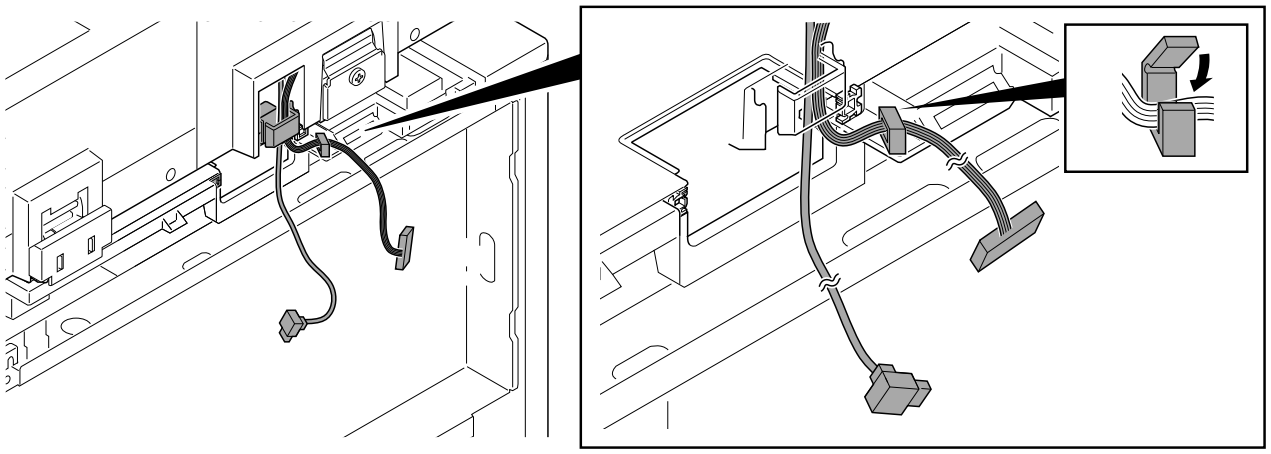

⑳

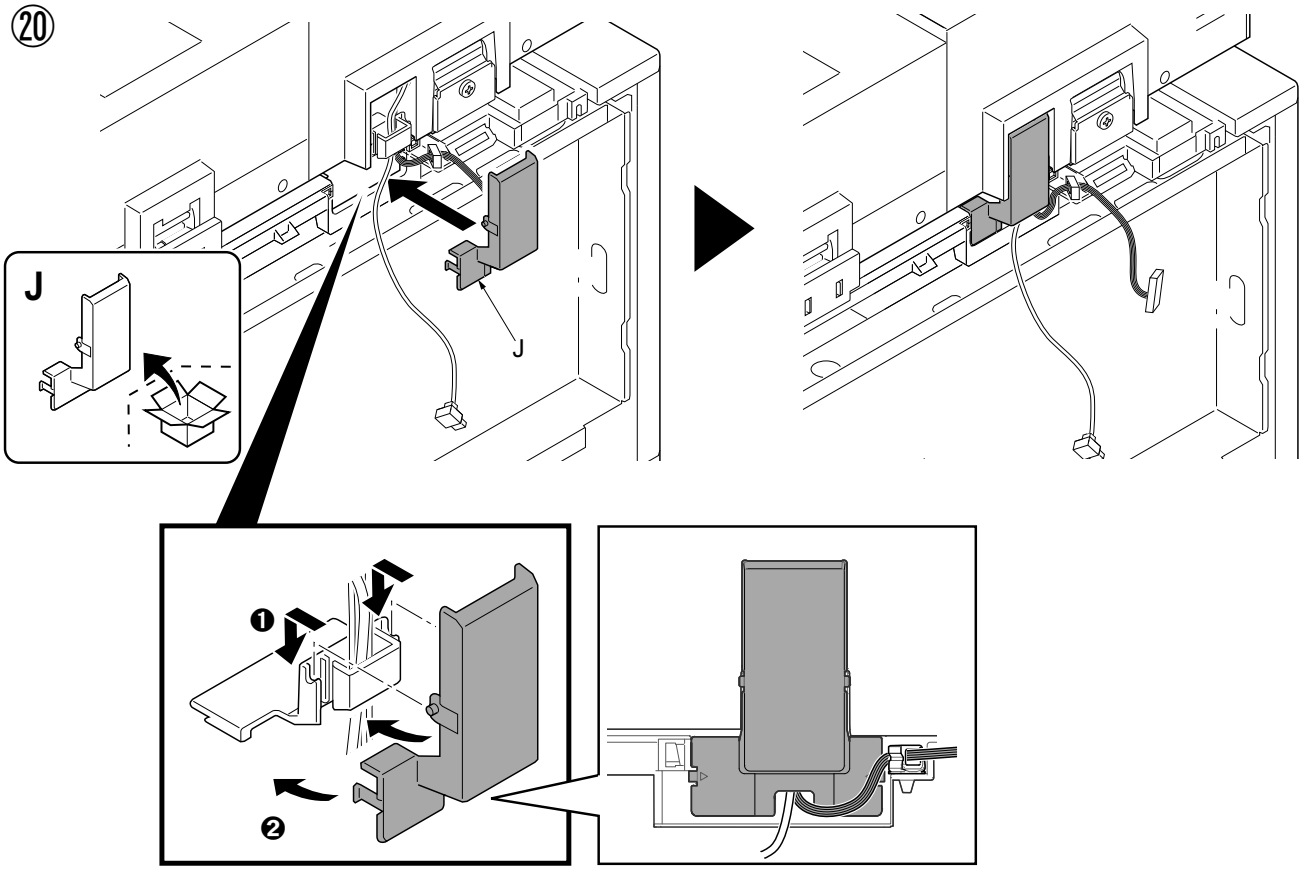

㉑

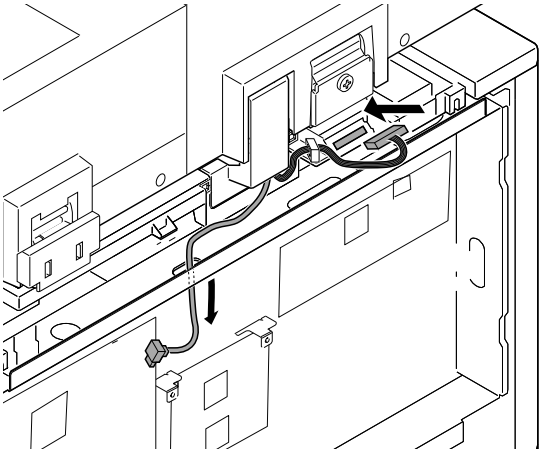

㉒

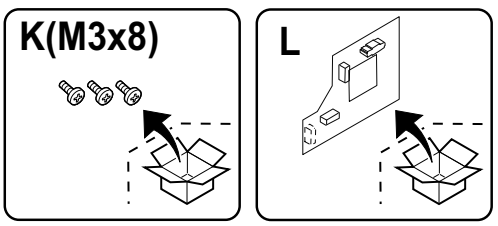

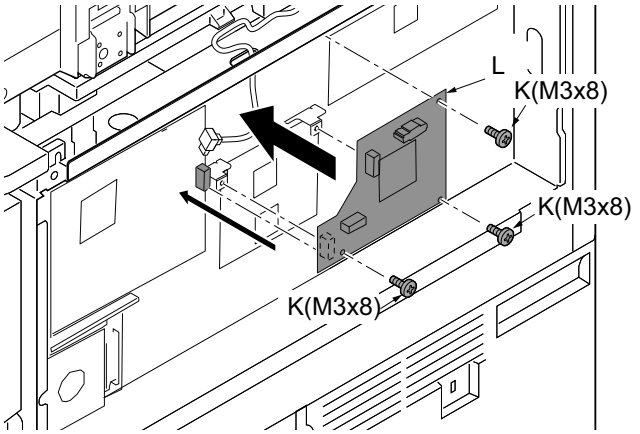

㉓

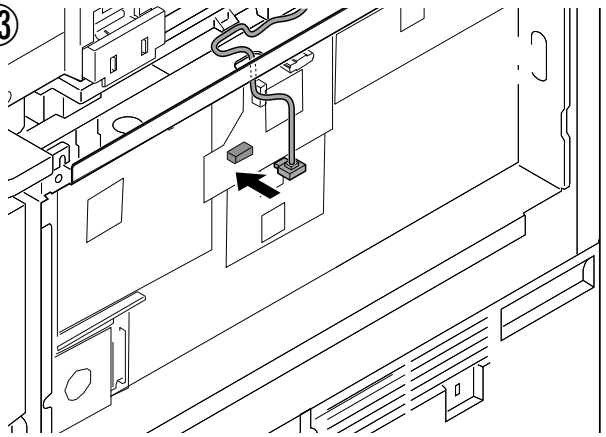

㉔

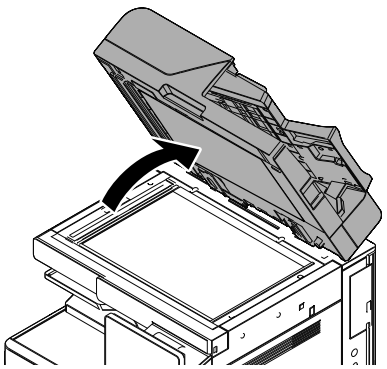

㉕

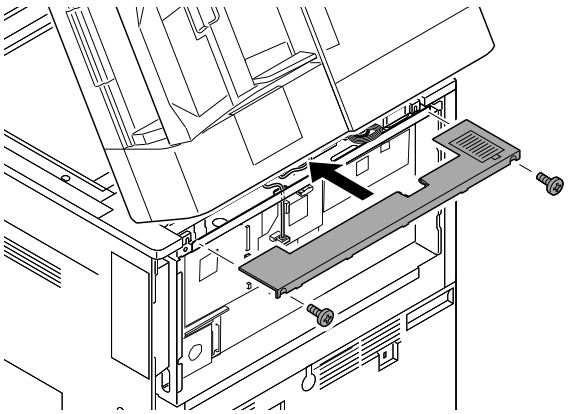

㉖

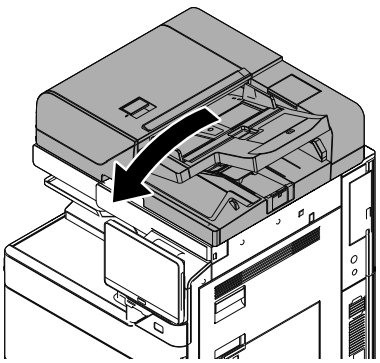

㉗

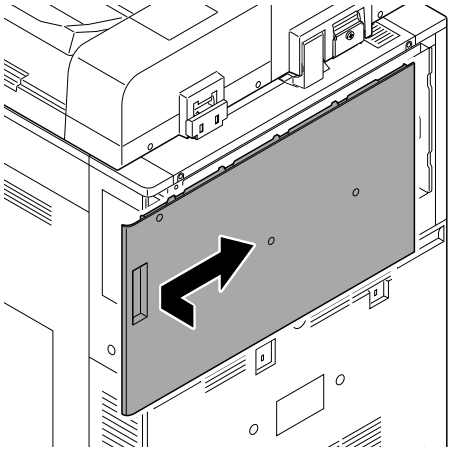

㉘

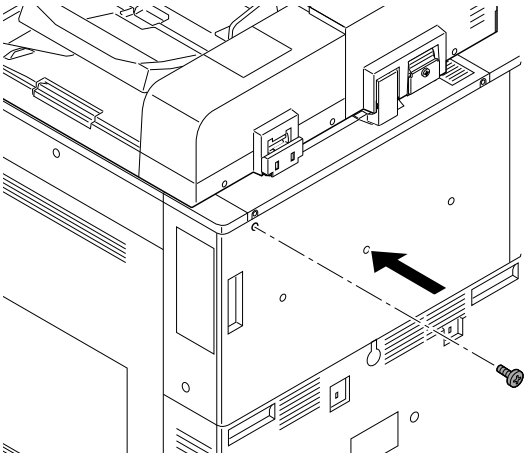

㉙

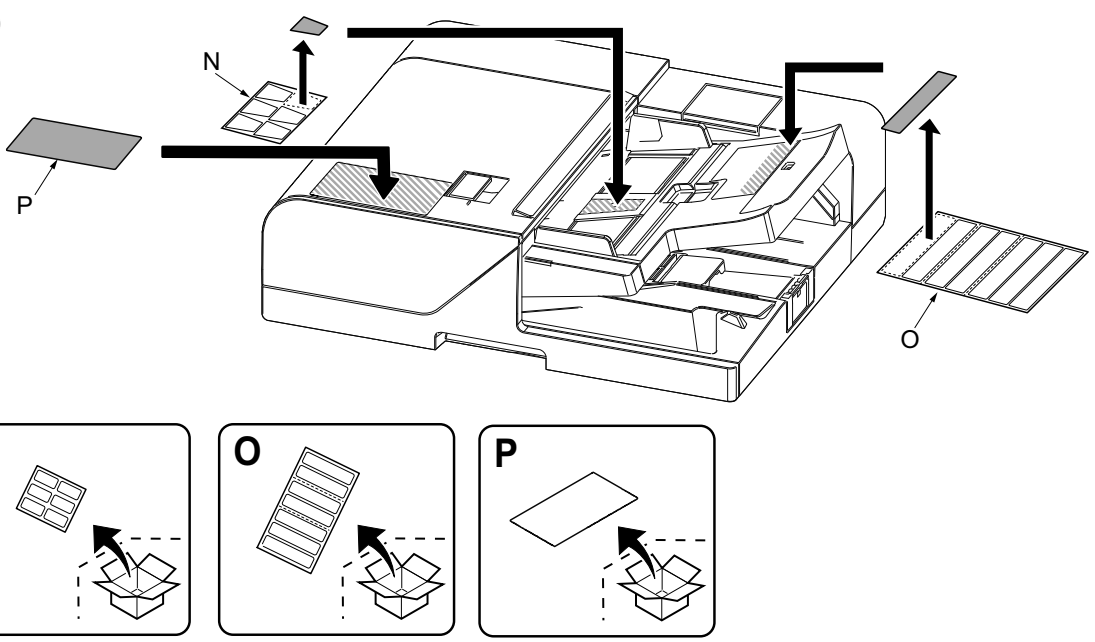

㉚

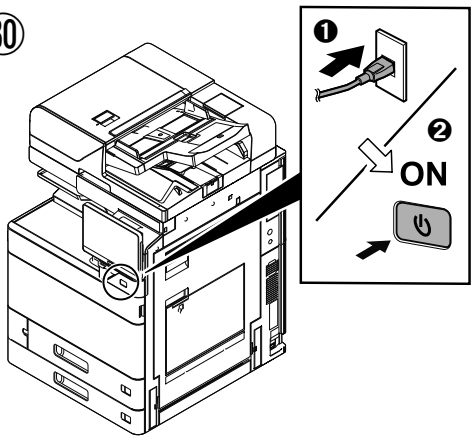

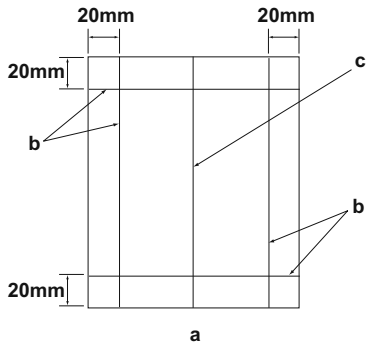

[Operation check]

1. To check the machine operation, prepare original (a) where 4 lines (b) are drawn 20 mm from the edges of the A3 sheet and 1 line (c) is drawn at its center.
2. Connect the power plug of the MFP into the wall outlet and turn the main power switch on.
3. Set the original (a) on the DP and perform a test copy to check the operation and the copy example.

[Vérification du fonctionnement]

1. Pour vérifier le bon fonctionnement de l'appareil, préparer un original (a) sur lequel sont tracées 4 lignes (b) à 20 mm des bords de la feuille A3 et 1 ligne (c) en son axe.
2. Brancher la fiche d'alimentation du MFP sur la prise murale et mettre l'appareil sous tension.
3. Placer l'original (a) sur le DP et effectuer une copie de test pour vérifier le fonctionnement et l'exemple de copie.

[Verifique el funcionamiento]

1. Para comprobar el funcionamiento del aparato, prepare un original (a) que contenga 4 líneas (b) dibujadas a 20 mm de los bordes de la hoja A3 y 1 línea (c) dibujada en el centro.
2. Conecte el enchufe eléctrico del MFP en el tomacorriente de la pared y encienda el interruptor principal.
3. Coloque el original (a) en el DP y haga una copia de prueba para verificar el funcionamiento y el ejemplo de copia.

[Funktionsprüfung]

1. Zum Prüfen der Gerätefunktion das Original (a) vorbereiten, auf das 4 Linien (b) 20 mm von den Kanten des A3-Blattes und 1 Linie (c) in der Mitte gezeichnet sind.
2. Den Netzstecker am MFP in die Steckdose stecken und den Strom einschalten.
3. Das Original (a) auf den DP legen und eine Testkopie erstellen, um die Funktion und das Kopierbeispiel zu prüfen.

[Verifica del funzionamento]

1. Per verificare il funzionamento della macchina, preparare l'originale (a) tirando 4 linee (b) a 20 mm dai bordi del foglio A3 e una linea (c) al centro.
2. Inserire la spina dell'alimentazione dell'MFP nella presa a muro, quindi posizionare l'interruttore principale su On.
3. Posizionare l'originale(a) sul DP ed eseguire una copia di prova per verificare il funzionamento e l'esempio di copia.

[动作确认]

1. 若要检查机器动作，准备一张 A3 原稿（a），距纸张边缘 20mm 画出 4 条线（b）并且在原稿中心画出 1 条线（c）。
2. 将 MFP 的电源插头插入墙壁插座并打开主电源。
3. 在 DP 上设定原稿（a）并进行测试复印，确认机器动作和复印样本。

[동작확인]

1. 기계 작동 확인을 위해서 , A3 용지 선단에서 20mm 떨어진 곳에 4 개의 선 (b) 과 센터에 1 개의 선 (c) 이 그려진 원고 (a) 를 준비 .
2. 콘센트에 MFP 전원플러그를 꽂고 메인 전원 스위치를 ON 으로 합니다 .
3. DP 상에 원고 (a) 를 준비하고 테스트 카피를 확인하여 작동 상태와 카피 샘플를 확인합니다 .

[動作確認]

1. A3 サイズ用紙の端から 20mm の位置に線 (b)4 本と、用紙の中心に線 (c)1 本を引いた、動作確認用の原稿 (a) を用意する。
2. MFP の電源プラグをコンセントに差し込み、主電源スイッチを ON にする。
3. 原稿 (a) を DP にセットし、テストコピーを行い、動作およびコピーサンプルを確認する。

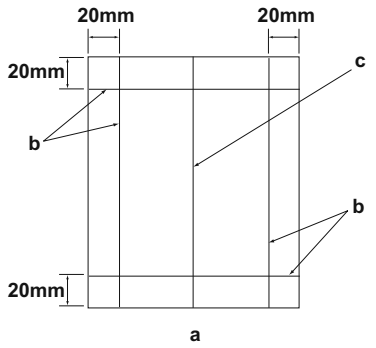

4. Compare original (a) with the copy example. If the gap exceeds the reference value, perform the following adjustments according to the type of the gap.
Check images of the DP after checking and adjusting images of the MFP. For details, see the service manual.
NOTICE: If there is any image fogging, adjust the U068 DP scanning position. If you change the scanning position with U068, adjust the U071 DP leading edge timing.

---

4. Comparer l'original (a) avec l'exemple de copie. Si l'écart excède la valeur de référence, effectuer les réglages suivants en fonction du type d'écart.
Vérifier les images du DP après avoir contrôlé et réglé les images du MFP. Pour plus de détails, se reporter au manuel d'entretien.
REMARQUE: Si l'image est floue, régler la position de balayage de U068 du DP. Si la position de balayage de U068 est modifiée, régler la synchronisation du bord d'attaque de U071.

---

4. Compare el original (a) con el ejemplo de copia. Si la separación supera el valor de referencia, realice los siguientes ajustes según el tipo de separación.
Compruebe las imágenes del DP después de comprobar y ajustar las imágenes del MFP. Para más detalles, lea el manual de servicio.
AVISO: Si la imagen estuviera borrosa, ajuste la posición de escaneo U068 del DP. Si cambia la posición de escaneo con U068, ajuste la sincronización de borde superior U071 del DP

---

4. Das Original (a) mit dem Kopierbeispiel vergleichen. Wenn der Abstand größer als der Bezugswert ist, die folgenden Einstellungen gemäß dem Abstandstyp durchführen.
Die Bilder des DP nach dem Prüfen und Einstellen der Bilder des MFP prüfen. Weitere Einzelheiten siehe Wartungsanleitung.
ANMERKUNG: Falls das Bild verschwommen wirkt, ist die U068 DP Scan-Position zu verstellen. Wenn Sie die Scan-Position mit U068 verstellen, müssen Sie das U071 DP-Vorderkanten-Timing entsprechend verstellen.

---

4. Confrontare l'originale (a) con l'esempio di copia. Se lo scostamento supera il valore di riferimento, eseguire le seguenti regolazioni in funzione del tipo di scostamento.
Controllare le immagini del DP dopo avere effettuato i controlli e le regolazioni delle immagini sull'MFP. Per ulteriori dettagli leggere il manuale d'istruzioni.
AVVISO: Se è presente una qualsiasi sfocatura dell'immagine, regolare la posizione di scansione DP U068. Se si cambia la posizione di scansione con U068, regolare la sincronizzazione del bordo principale DP U071.

---

4. 对比复印样本和原稿（a），如果偏移值在标准值以上时，对偏移原稿进行调整。
对 MFP 的图像确认和调整后再对 DP 的图像进行确认。详细内容请参见维修手册。
（注意）如果图像出现底灰，用 U068 来调整 DP 的扫描位置。如果用 U068 更改了扫描位置，则再用 U071 对 DP 的前端定时进行调整

---

4. 원고 (a) 와 카피 샘플을 비교하여 차이가 기준치를 벗어나는 경우 , 차이 (틈) 의 형태에 따라 다음을 조정합니다 .
MFP 의 화상확인 및 조정을 하고나서 DP 의 화상확인을 할 것 . 상세는 서비스 매뉴얼을 참조할 것 .
(주의) 화상 카브리가 발생하는 경우 , U068DP 스캔위치 조정을 합니다 . U068 에서 스캔위치를 변경한 경우 U071DP 선단 타이밍 조정을 합니다 .

---

4. 原稿 (a) とコピーサンプルを比較し、基準値以上のずれがある場合、ずれ方に応じて調整を行う。
MFP の画像確認及び調整を行ってから DP の画像確認を行うこと。詳細はサービスマニュアルを参照のこと。
(注意)画像カブリが発生する場合、U068 DP 読み取り位置の調整を行う。U068 で読み取り位置を変更した場合、U071 DP 先端タイミング調整を行う。

Be sure to adjust in the following order. If not, the adjustment cannot be performed correctly.
For checking the angle of leading edge, see page 12. <Reference value> Simplex copying: within ±3.0 mm; Duplex copying: within ±4.0 mm
For checking the angle of trailing edge, see page 15. <Reference value> Simplex copying: within ±3.0 mm; Duplex copying: within ±4.0 mm
For checking the magnification, see page 18. <Reference value> Within ±1.5%

Veillez à effectuer le réglage en procédant dans l'ordre suivant. Sinon, il sera impossible d'obtenir un réglage correct.
Pour vérifier l'angle du bord avant, reportez-vous à la page 12. <Valeur de référence>Copie recto seul: ±3,0 mm max.; copie recto verso: ±4,0 mm max.
Pour vérifier l'angle du bord arrière, reportez-vous à la page 15. <Valeur de référence>Copie recto seul: ±3,0 mm max.; copie recto verso: ±4,0 mm max.
Pour vérifier l'agrandissement, reportez-vous à la page 18. <Valeur de référence>±1,5% max.

Asegúrese de ajustar en el siguiente orden. De lo contrario, el ajuste no puede hacerse correctamente.
Para verificar el ángulo del borde superior, vea la página 12. <Valor de referencia>Copia simple: dentro de ±3,0 mm; Copia duplex: dentro de ±4,0 mm
Para verificar el ángulo del borde inferior, vea la página 15. <Valor de referencia>Copia simple: dentro de ±3,0 mm; Copia duplex: dentro de ±4,0 mm
Para verificar el cambio de tamaño, vea la página 18. <Valor de referencia>Dentro de ±1,5 %

Die Einstellung in der folgenden Reihenfolge durchführen. Anderenfalls kann die Einstellung nicht korrekt durchgeführt werden.
Angaben zur Prüfung des Winkels der Vorderkante auf Seite 12. <Bezugswert>Simplexkopie: innerhalb ±3,0 mm; Duplexkopie: innerhalb ±4,0 mm
Angaben zur Prüfung des Winkels der Hinterkante auf Seite 15. <Bezugswert>Simplexkopie: innerhalb ±3,0 mm; Duplexkopie: innerhalb ±4,0 mm
Angaben zur Prüfung der Vergrößerung auf Seite 18. <Bezugswert> Innerhalb ±1,5 %

Accertarsi di eseguire le regolazioni in questa sequenza: in caso contrario, la regolazione non può essere effettuata correttamente.
Per controllare l'angolo del bordo principale, vedere pagina 12. <Valore di riferimento>Copia simplex: entro ±3,0 mm; Copia duplex: entro ±4,0 mm
Per controllare l'angolo del bordo di uscita, vedere pagina 15. <Valore di riferimento>Copia simplex: entro ±3,0 mm; Copia duplex: entro ±4,0 mm
Per controllare l'ingrandimento, vedere pagina 18. <Valore di riferimento>Entro ±1,5%

必须按照以下步骤进行调整，否则不能达到准确调整的要求。
·确认前端倾斜度 第 12 页 〈标准值〉 单面：±3.0㎜以内，双面：±4.0㎜以内
?确认后端倾斜度 第 15 页 〈标准值〉 单面：±3.0㎜以内，双面：±4.0㎜以内
?确认等倍值 第 18 页 〈标准值〉 ±1.5%以内

반드시 하기의 순서로 조정을 할 것 . 순서대로 조정을 하지 않는 경우 바른 조정을 할 수 없습니다 .
·선단경사확인 12 페이지 <기준치>단면:±3.0mm 이내 , 양면:±4.0mm 이내
·후단경사확인 15 페이지 <기준치>단면:±3.0mm 이내 , 양면:±4.0mm 이내
·등배도 확인 18 페이지 <기준치> ±1.5% 이내

必ず下記の順序で調整を行うこと。順序通りに調整を行わない場合、正しい調整ができない。
·先端斜め確認 12 ページ ＜基準値＞片面:±3.0㎜以内、両面:±4.0㎜以内
·後端斜め確認 15 ページ ＜基準値＞片面:±3.0㎜以内、両面:±4.0㎜以内
·等倍度確認 18 ページ ＜基準値＞ ±1.5%以内

For checking the leading edge timing, see page 20. <Reference value> Within ±2.5 mm
For checking the center line, see page 22. <Reference value> Simplex copying: within ±2.0 mm;
Duplex copying: within ±3.0 mm

When using the original for adjustment, automatic adjustment of magnification, leading edge timing and center line can be performed at a time.
For the automatic adjustment using the original for adjustment, see page 24.

Pour vérifier la synchronisation du bord avant, reportez-vous à la page 20. <Valeur de référence> ±2,5 mm max.
Pour vérifier la ligne médiane, reportez-vous à la page 22. <Valeur de référence> Copie recto seul: ±2,0 mm max.;
Copie recto verso: ±3,0 mm max.

Lorsque vous utilisez l'original pour effectuer le réglage, vous pouvez effectuer automatiquement le réglage de l'agrandissement, de la synchronisation du bord avant et de la ligne médiane en une seule fois.
Pour le réglage automatique en utilisant l'original pour effectuer le réglage, reportez-vous à la page 24.

Para verificar la sincronización del borde inferior, vea la página 20. <Valor de referencia> Dentro de ±2,5 mm
Para verificar la línea central, vea la página 22. <Valor de referencia> Copia simple: dentro de ±2,0 mm;
Copia duplex: dentro de ±3,0 mm

Cuando utilice el original para el ajuste, puede hacerse un ajuste automático del cambio de tamaño, sincronización del borde superior y línea central al mismo tiempo.
Para el ajuste automático utilizando el original para el ajuste, vea la página 24.

Angaben zur Prüfung des Vorderkanten-Timings auf Seite 20. <Bezugswert> Innerhalb ±2,5 mm
Angaben zur Prüfung der Mittellinie auf Seite 22. <Bezugswert> Simplexkopie: innerhalb ±2,0 mm;
Duplexkopie: innerhalb ±3,0 mm

Bei Verwendung des Originals für die Einstellung können die automatischen Einstellungen für Vergrößerung, Vorderkanten-Timing und Mittellinie gleichzeitig durchgeführt werden.
Angaben zur automatischen Einstellung mithilfe des Originals auf Seite 24.

Per controllare la sincronizzazione del bordo principale, vedere pagina 20. <Valore di riferimento> Entro ±2,5 mm
Per controllare la linea centrale, vedere pagina 22. <Valore di riferimento> Copia simplex: entro ±2,0 mm;
Copia duplex: entro ±3,0 mm

Quando si utilizza l'originale per la regolazione, la regolazione automatica dell'ingrandimento, della sincronizzazione del bordo principale e della linea centrale possono essere eseguiti contemporaneamente.
Per la regolazione automatica eseguita con l'originale, vedere pagina 24.

·确认前端定时调整 第 20 页 〈标准值〉 ±2.5㎜ 以内
·确认中心线 第 22 页 〈标准值〉 单面：±2.0㎜ 以内，
双面：±3.0㎜ 以内

使用调整用的原稿时，可以同时自动进行等倍值，前端定时以及中心线的调整。
·通过调整用原稿进行自动调整 第 24 页

·선단 타이밍 확인 20 페이지 <기준치> ±2.5mm 이내
·센터 라인확인 22 페이지 <기준치> 단면:±2.0mm 이내,
양면:±3.0mm 이내

조정용 원고를 사용하는 경우, 등배도, 선단타이밍, 센터 라인의 자동조정이 한번에 수행됩니다.
·조정용원고를 사용한 자동조정은 24 페이지 참조

·先端タイミング確認 20 ページ ＜基準値＞ ±2.5㎜ 以内
·センターライン確認 22 ページ ＜基準値＞片面:±2.0㎜ 以内、
両面:±3.0㎜ 以内

調整用原稿を使用すると、等倍度調整、先端タイミング調整、センターライン調整の自動調整が一度におこなえる。
·調整用原稿による自動調整 24 ページ

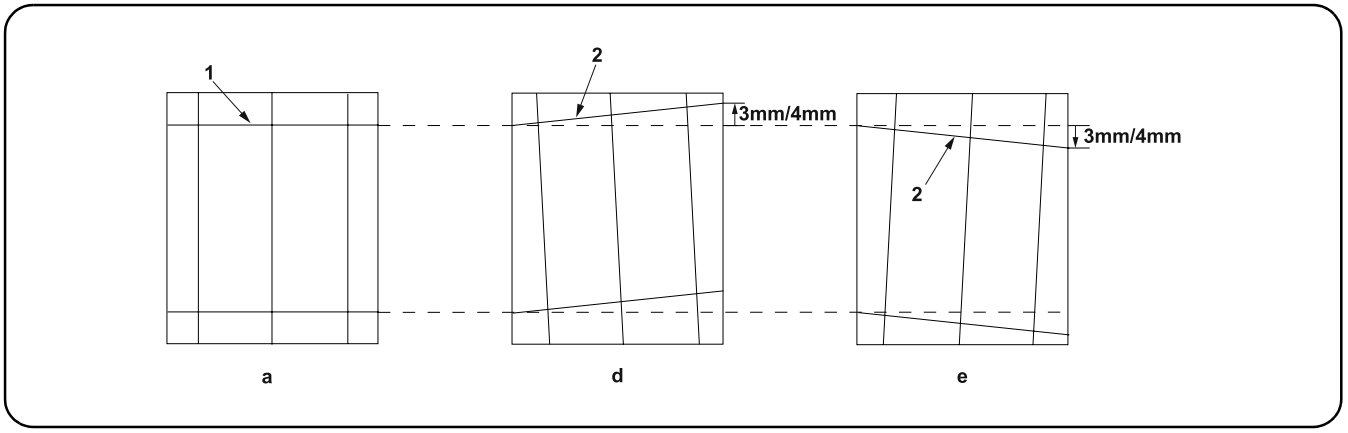

[Checking the angle of leading edge]

1. Check the horizontal gap between line (1) of original (a) and line (2) of copy example positions. If the gap exceeds the reference value, adjust the gap according to the following procedure.
<Reference value> For single copying: The horizontal gap of line (2) should be within ±3.0 mm.
For duplex copying: The horizontal gap of line (2) should be within ±4.0 mm.

[Vérification de l'angle du bord avant]

1. Vérifier l'écart horizontal entre la position de la ligne (1) de l'original (a) et celle de la ligne (2) de l'exemple de copie. Si l'écart excède la valeur de référence, le régler selon la procédure suivante.
<Valeur de référence> Pour la copie recto : l'écart horizontal de la ligne (2) doit être de ±3,0 mm.
Pour la copie recto-verso : l'écart horizontal de la ligne (2) doit être de ±4,0 mm.

[Verificación del ángulo del borde superior]

1. Compruebe la separación horizontal entre la línea (1) del original (a) y la línea (2) de las posiciones del ejemplo de copia. Si la separación supera el valor de referencia, ajústela siguiendo este procedimiento.
<Valor de referencia> Para el copiado por una cara: la separación horizontal de la línea (2) debe estar dentro de ±3,0 mm.
Para el copiado dúplex: la separación horizontal de la línea (2) debe estar dentro de ±4,0 mm.

[Überprüfen des Winkels der Vorderkante]

1. Den horizontalen Abstand zwischen der Linie (1) des Originals (a) und der Linie (2) der Kopierbeispielspositionen prüfen. Wenn der Abstand größer als der Bezugswert ist, den Abstand mit dem folgenden Verfahren einstellen.
<Bezugswert> Einzelkopie: Der horizontale Abstand der Linie (2) sollte innerhalb von ±3,0 mm liegen.
Duplexkopie: Der horizontale Abstand der Linie (2) sollte innerhalb von ±4,0 mm liegen.

[Controllo dell'angolo del bordo principale]

1. Verificare lo scostamento orizzontale fra la linea (1) dell'originale (a) e la linea (2) delle posizioni dell'esempio di copia. Se lo scostamento supera il valore di riferimento, regolare lo scostamento stesso seguendo questa procedura.
<Valore di riferimento> Per la copia singola: lo scostamento orizzontale della linea (2) deve limitarsi a ± 3,0 mm.
Per la copia duplex: lo scostamento orizzontale della linea (2) deve limitarsi a ±4,0 mm.

[确认前端倾斜度]

1. 确认原稿 (a) 上的线 (1) 和复印样本上的线 (2) 的左右偏移值。如果偏移值超过标准值，则按照下列步骤进行调整。
〈 标准值 〉单面复印时，线 (2) 的左右偏移值 ：±3.0㎜ 以内。
双面复印时，线 (2) 的左右偏移值 ：±4.0㎜ 以内。

[선단 경사확인]

1. 원고 (a) 의 선 (1) 과 샘플 카피의 선 (2) 의 좌우 차이를 확인합니다 . 차이가 기준치 외의 경우 다음의 순서대로 조정을 합니다 .
＜기준치＞단면의 경우 선 (2) 의 좌우차이 : ±3.0mm 이내
양면의 경우 선 (2) 의 좌우차이 : ±4.0mm 이내

[先端斜め確認]

1. 原稿 (a) の線 (1) とコピーサンプルの線 (2) の左右のずれを確認する。ずれが基準値外の場合、次の手順で調整を行う。
＜基準値＞片面の場合、線 (2) の左右ずれ : ±3.0㎜ 以内
両面の場合、線 (2) の左右ずれ : ±4.0㎜ 以内

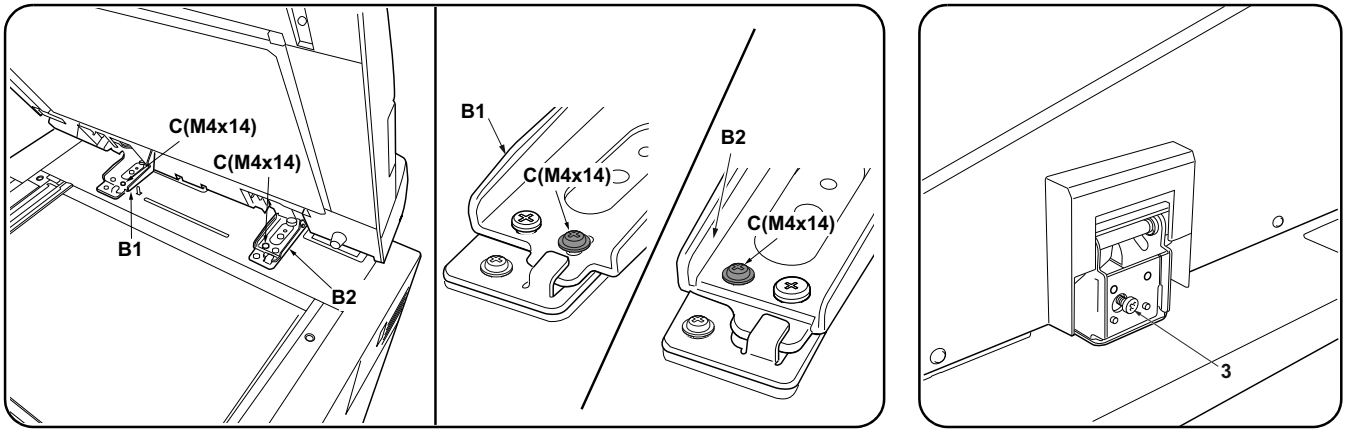

2. Remove the left hinge cover (F) and the angle control fitting (E). Loosen the 2 M4 × 14 screws (C) on the left and right fixing fittings (B1)(B2).
3. Turn adjusting screw (3) at the rear side of the right hinge to adjust the DP position.
For copy example (d): Turn the adjusting screw counterclockwise and move the DP to the inner side.
For copy example (e): Turn the adjusting screw clockwise and move the DP to the front side.
Amount of change per scale: Approx. 1.0 mm

---

2. Déposer le couvercle de la charnière gauche (F) et la fixation d'angle (assurant le contrôle de l'ouverture) (E). Desserrer les 2 vis M4 × 14 (C) sur les fixations gauche et droite (B1)(B2).
3. Tourner la vis de réglage (3) à l'arrière de la charnière droite pour régler la position du DP.
Pour l'exemple de copie (d) : tourner la vis de réglage dans le sens inverse des aiguilles d'une montre et déplacer le DP vers l'intérieur.
Pour l'exemple de copie (e) : tourner la vis de réglage dans le sens des aiguilles d'une montre et déplacer le DP vers l'avant.
Changement par graduation d'échelle : environ 1,0 mm

---

2. Quite la cubierta de la bisagra izquierda (F) y el herraje de control de ángulo (E). Afloje los 2 tornillos M4 × 14 (C) de los herrajes de fijación izquierdo y derecho (B1)(B2).
3. Gire el tornillo de ajuste (3) en el lado trasero de la bisagra derecha para ajustar la posición del DP.
Para el ejemplo de copia (d): gire el tornillo de ajuste en sentido antihorario y mueva el DP al lado interno.
Para el ejemplo de copia (e): gire el tornillo de ajuste en sentido horario y mueva el DP al lado frontal.
Magnitud del cambio por escala: aprox. 1,0 mm

---

2. Die linke Scharnierabdeckung (F) und die Winkeleinstellbefestigung (E) entfernen. Die 2 M4 × 14 Schrauben (C) an den linken und rechten Befestigungshalterungen(B1)(B2) lösen.
3. Die Einstellschraube (3) an der Rückseite des rechten Scharniers einstellen, um die DP-Position einzustellen.
Kopierbeispiel (d): Die Einstellschraube nach links drehen und den DP nach innen schieben.
Kopierbeispiel (e): Die Einstellschraube nach rechts drehen und den DP nach vorne schieben.
Änderung pro Maßstab: Ungefähr 1,0 mm

---

2. Rimuovere il coperchio cerniera sinistra (F) e l'accessorio di regolazione angolare (E). Allentare le 2 viti M4 × 14 (C) sui lati destro e sinistro degli accessori di fissaggio (B1)(B2) destro e sinistro.
3. Ruotare la vite di regolazione (3) sul lato posteriore della cerniera destra per regolare la posizione del DP.
Per l'esempio di copia (d): ruotare la vite di regolazione in senso antiorario e spostare il DP verso l'interno.
Per l'esempio di copia (e): ruotare la vite di regolazione in senso orario e spostare il DP in avanti.
Entità modifica per scala: circa 1,0 mm

---

2. 拆下左部铰链盖板 (F) 以及角度限制工具 (E)。拧松左右固定工具 (B1)(B2) 的 2 颗 M4x14(C) 螺丝。
3. 旋转右部铰链的后部的调整螺钉 (3) 以调整 DP 位置。
对于复印样本 (d) ：逆时针旋转调整螺钉并将 DP 移动到内侧。
对于复印样本 (e) ：顺时针旋转调整螺钉并将 DP 移动到正面。
按比例尺的更改量 ：约 1.0mm

---

2. 좌 힌지커버 (F) 및 각도 고정쇠 (E) 를 제거합니다 . 좌우의 고정쇠 (B1)(B2) 의 나사 M4x14(C) 2 개를 느슨하게 합니다 .
3. 우 힌지 뒷측 조정나사 (3) 를 돌려 DP 의 위치를 조정합니다 .
샘플 카피 (d) 의 경우:조정나사를 좌로 돌려 DP 를 안으로 넣습니다 .
샘플 카피 (e) 의 경우 : 조정나사를 오른쪽으로 돌려 DP 를 앞으로 뺍니다 .
1 개 변화량:약 1.0mm

---

2. 左ヒンジカバー(F) および角度規制金具 (E) を取り外す。左右の固定金具 (B1)(B2) のビス M4x14(C)2 本を緩める。
3. 右ヒンジ後側の調整ビス (3) を回し、DP の位置を調整する。
コピーサンプル (d) の場合:調整ビスを左に回し、DP を奥へ動かす。
コピーサンプル (e) の場合:調整ビスを右に回し、DP を手前へ動かす。
1 目盛り当たりの変化量:約 1.0mm

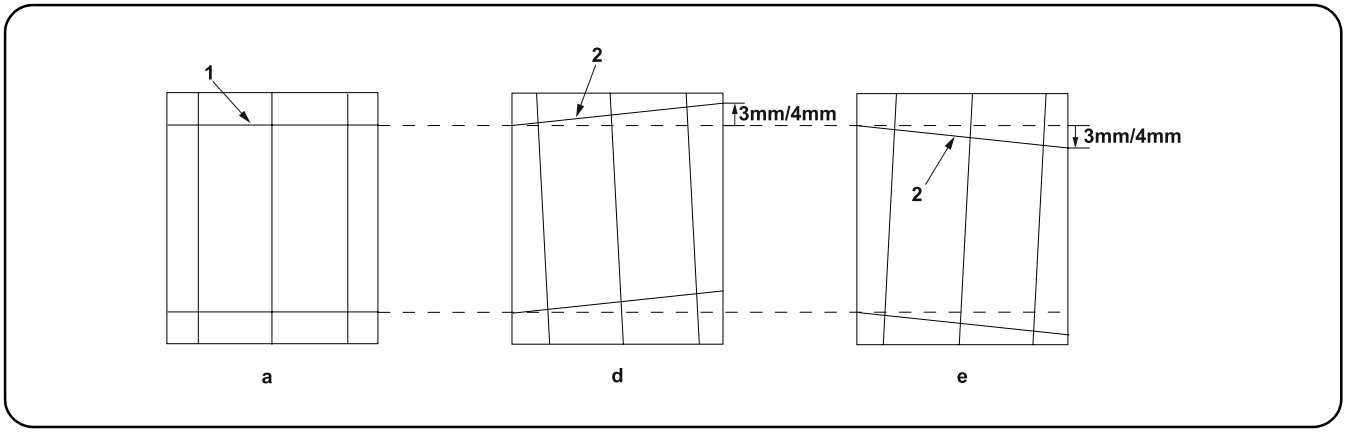

4.Perform a test copy.
5.Repeat the steps above until the gap of line (2) of copy example shows the following reference values.
<Reference value>For single copying: The horizontal gap of line (2) should be within ±3.0 mm.
For duplex copying: The horizontal gap of line (2) should be within ±4.0 mm.
6.After adjustment is completed, retighten two M4 × 14 screws (C) that have been loosened in step 2.
7.Remove the original mat (M) and refit it (see steps 6 on page 2).

4.Effectuer une copie de test.
5.Répéter les étapes ci-dessus jusqu'à ce que l'écart de la ligne (2) de l'exemple de copie indique les valeurs de référence suivantes.
<Valeur de référence>Pour la copie recto : l'écart horizontal de la ligne (2) doit être de ±3,0 mm.
Pour la copie recto-verso : l'écart horizontal de la ligne (2) doit être de ±4,0 mm.
6.Une fois le réglage effectué, resserrer les deux vis M4 × 14 (C) desserrées à l'étape 2.
7.Retirez le tapis d'original (M) et remettez-le en place (Reportez-vous aux étapes 6 à la page 2).

4.Haga una copia de prueba.
5.Repita los pasos anteriores hasta que la separación de la línea (2) del ejemplo de copia presente los siguientes valores de referencia.
<Valor de referencia>Para el copiado por una cara: la separación horizontal de la línea (2) debe estar dentro de ±3,0 mm.
Para el copiado dúplex: la separación horizontal de la línea (2) debe estar dentro de ±4,0 mm.
6.Una vez hecho el ajuste, vuelva a apretar los dos tornillos M4 × 14 (C) que ha aflojado en el paso 2.
7.Desmonte la plancha de original (M) y vuelva a colocar (vea los pasos 6 en la página 2).

4.Eine Testkopie erstellen.
5.Die obigen Schritte wiederholen, bis der Abstand der Linie (2) des Kopierbeispiels die folgenden Bezugswerte aufweist.
<Bezugswert>Einzelkopie: Der horizontale Abstand der Linie (2) sollte innerhalb von ±3,0 mm liegen.
Duplexkopie: Der horizontale Abstand der Linie (2) sollte innerhalb von ±4,0 mm liegen.
6.Nach der Einstellung die zwei M4 × 14 Schrauben (C), die in Schritt 2 gelöst wurden, wieder festziehen.
7.Die Originalmatte (M) abnehmen und wieder anbringen (siehe Schritte 6 auf Seite 2).

4.Eseguire una copia di prova.
5.Ripetere le operazioni sopra descritte fino a quando lo scostamento della linea (2) dell'esempio di copia riporterà i valori di riferimento seguenti.
<Valore di riferimento>Per la copia singola: lo scostamento orizzontale della linea (2) deve limitarsi a ± 3,0 mm.
Per la copia duplex: lo scostamento orizzontale della linea (2) deve limitarsi a ±4,0 mm.
6.Una volta conclusa la regolazione, serrare nuovamente le viti M4 × 14 (C) che erano state allentate al Punto 2.
7.Rimuovere il coprioriginale (M) e reinserirlo (vedere i passi 6 a pagina 2).

---

4. 进行测试复印。
5. 重复上述步骤直至复印样本上的线(2)的偏移值达到标准值范围内。
〈标准值〉单面时，线(2)的左右偏移值：±3.0mm 以内
双面时，线(2)的左右偏移值：±4.0mm 以内
6. 调整完成后，重新拧紧在步骤 2 中松开的两颗 M4×14 螺丝(C)。
7. 拆下原稿垫(M)，参照第 2 页的步骤 6 再次装上。

---

4. 테스트 카피를 합니다 .
5. 샘플 카피 선 (2) 차이가 기준치내가 될 때까지 조정을 반복합니다 .
<기준치>단면의 경우 선 (2) 의 좌우차이:±3.0mm 이내
양면의 경우 선 (2) 의 좌우차이:±4.0mm 이내
6. 조정종료 후 순서 2 에서 느슨하게 한 나사 M4×14(C) 2 개를 조입니다 .
7. 원고매트 (M) 를 제거하고 2 페이지 순서 6 을 참고로 다시 부착합니다 .

---

4. テストコピーを行う。
5. コピーサンプルの線 (2) のずれが基準値内になるまで、調整を繰り返す。
＜基準値＞片面の場合、線 (2) の左右ずれ:±3.0mm 以内
両面の場合、線 (2) の左右ずれ:±4.0mm 以内
6. 調整終了後、手順 2 で緩めたビス M4×14(C)2 本を締め付ける。
7. 原稿マット (M) を取り外し、2 ページの手順 6 を参考に再度取り付ける。

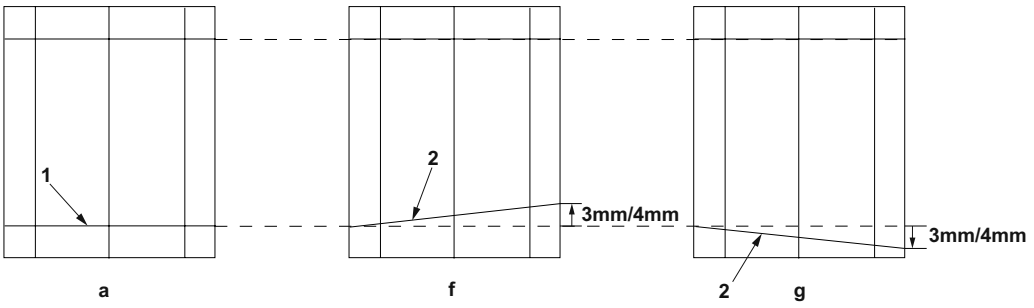

[Checking the angle of trailing edge]

1. Check the gap between line (1) of original (a) and line (2) of copy example. If the gap exceeds the reference value, perform the following adjustment.
<Reference value> For simplex copying: Within ±3.0 mm
For duplex copying: Within ±4.0 mm

[Vérification de l'angle du bord arrière]

1. Vérifiez l'écart entre la ligne (1) de l'original (a) et la ligne (2) de l'exemple de copie. Si l'écart est supérieur à la valeur de référence, effectuez le réglage suivant.
<Valeur de référence> Copie recto seul: ±3,0 mm max.
Copie recto verso: ±4,0 mm max.

[Verificación del ángulo del borde inferior]

1. Verifique la separación entre la línea (1) del original (a) y la línea (2) de la copia de muestra. Si la superación supera el valor de referencia, haga el siguiente ajuste.
<Valor de referencia> Para copia simple: Dentro de ±3,0 mm
Para copia duplex: Dentro de ±4,0 mm

[Überprüfen des Winkels der Hinterkante]

1. Die Abweichung der Linie (1) des Originals (a) und der Linie (2) des Kopienmusters prüfen. Überschreitet die Abweichung den Bezugswert, ist die folgende Einstellung durchzuführen.
<Bezugswert> Für Simplexkopie: Innerhalb ±3,0 mm
Für Duplexkopie: Innerhalb ±4,0 mm

[Controllo dell'angolo del bordo di uscita]

1. Controllare la differenza tra la linea (1) dell'originale (a) e la linea (2) della copia di esempio. Se la differenza supera il valore di riferimento, effettuare la seguente regolazione.
<Valore di riferimento> Per copia simplex: Entro ±3,0 mm
Per copia duplex: Entro ±4,0 mm

[确认后端倾斜度]

1. 确认原稿 (a) 上的线 (1) 和复印样本上的线 (2) 的偏移值。如果超过标准值时，必须进行调整。
〈标准值〉单面时：±3.0㎜ 以内
双面时：±4.0㎜ 以内

[후단 경사확인]

1. 원고 (a) 의 선 (1) 과 샘플 카피 선 (2) 의 차이를 확인합니다 . 차이가 기준치 외의 경우에는 조정을 합니다 .
＜기준치＞단면의 경우:±3.0m 이내
양면의 경우:±4.0mm 이내

[後端斜め確認]

1. 原稿 (a) の線 (1) とコピーサンプルの線 (2) のずれを確認する。ずれが基準値外の場合は調整をおこなう。
＜基準値＞片面の場合:±3.0㎜ 以内
両面の場合:±4.0㎜ 以内

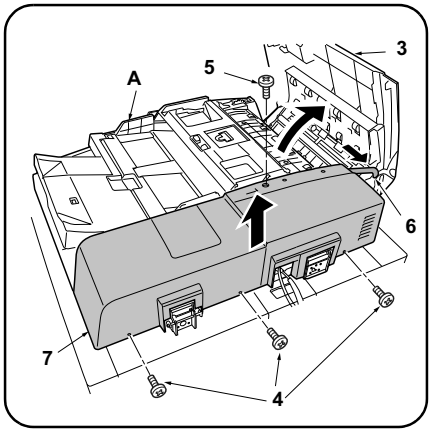

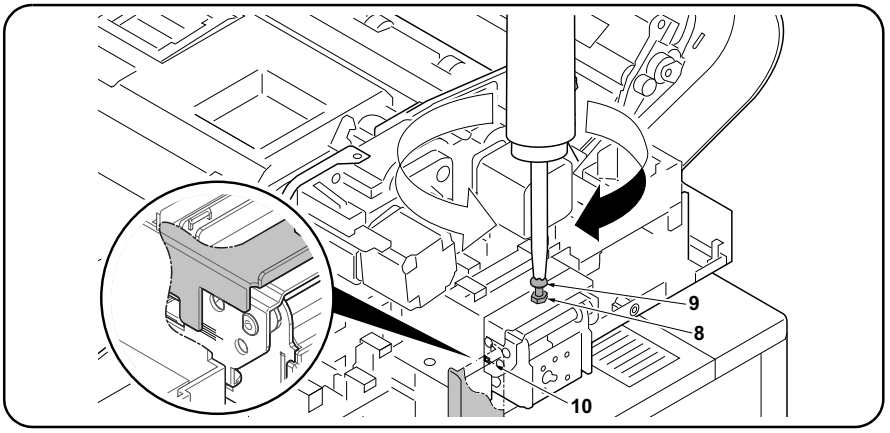

2. Open the upper cover (3) of the DP (A).
3. Remove the 3 TP screws (4) and the screw (5), and remove the strap (6) from the rear cover (7). Then remove the DP (A) rear cover (7).

4. Adjust the height of DP.
Loosen the nut (8).
For copy example (f): Loosen the adjusting screw (9).
For copy example (g): Tighten the adjusting screw (9).
Amount of change per scale: Approx. 0.5 mm (10)
Retighten the nut (8).
5. Refit the rear cover (7) removed in step 3.

---

2. Ouvrir le couvercle supérieur (3) du DP (A)
3. Déposer les 3 vis TP (4) et la vis (5) puis déposer la courroie (6) du couvercle arrière (7). Déposer ensuite le couvercle arrière (7) du DP (A).

4. Réglez la hauteur du DP.
Desserrez l'écrou (8).
Pour l'exemple de copie (f): Desserrez la vis de réglage (9).
Pour l'exemple de copie (g): Serrez la vis de réglage (9).
Quantité de changement par pas: Environ 0,5 mm (10)
Resserrez l'écrou (8).
5. Reposer le couvercle arrière (7) déposé à l'étape 3.

---

2. Abra la cubierta superior (3) del DP (A).
3. Quite los 3 tornillos TP (4) y el tornillo (5) y quite la correa (6) de la cubierta trasera (7). Después, quite la cubierta trasera (7) del DP (A).

4. Ajuste la altura del DP.
Afloje la tuerca (8).
Para la copia de muestra (f): Afloje el tornillo de ajuste (9).
Para la copia de muestra (g): Apriete el tornillo de ajuste (9).
Cantidad de cambio de escala: Aprox. 0,5 mm (10)
Vuelva a apretar la tuerca (8).
5. Vuelva a colocar la cubierta (7) desmontada en el paso 3.

---

2. Die obere Abdeckung (3) des DP (A) öffnen.
3. Die 3 TP-Schrauben (4) und die Schraube (5) entfernen und den Riemen (6) von der hinteren Abdeckung (7) abnehmen. Dann die hintere Abdeckung (7) des DP (A) abnehmen.

4. Die Höhe des DP einstellen.
Lösen Sie die Mutter (8).
Für Kopienmuster (f): Lösen Sie die Einstellschraube (9).
Für Kopienmuster (g): Die Einstellschraube (9) festziehen.
Änderungsbetrag pro Skalenstrich: Ca. 0,5 mm (10)
Ziehen Sie die Mutter (8) wieder fest.
5. Die in Schritt 3 entfernte hintere Abdeckung (7) wieder anbringen.

---

2. Aprire il pannello superiore (3) del DP (A).
3. Rimuovere le 3 viti TP (4) e la vite (5), e quindi rimuovere la cinghietta (6) dal coperchio posteriore (7). Quindi rimuovere il coperchio posteriore (7) del DP (A).

4. Regolazione dell'altezza del DP
Allentare il dado (8).
Per un esempio di copia (f): Allentare la vite di regolazione (9).
Per un esempio di copia (g): Stringere la vite di regolazione (9).
Variazione graduale: Circa 0,5 mm (10)
Stringere di nuovo il dado (8).
5. Reinserire il coperchio posteriore (7) rimosso nel passo 3.

---

2. 打开 DP(A)的上盖板(3)。
3. 拆除 3 颗 TP 螺丝 (4) 和 1 颗螺丝 (5)，将塑料片 (6) 从后盖板 (7) 上拆除，拆下 DP 主机 (A) 的后盖板 (7)。

4. 调整 DP 的高度。
松驰螺母(8)。
复印样张(f)时：松弛调整螺丝(9)。
复印样张(g)时：紧固调整螺丝(9)。
每 1 格的移动量：约 0.5mm(10)
将螺母(8)按原样紧固好。
5. 重新安装在步骤 3 中拆下的后盖板(7)。

---

2. DP(A) 의 DP 윗 커버 (3) 를 엽니다 .
3. TP 나사 (4) 3 개와 나사 (5) 1 개를 제거하고 스트랩 (6) 을 뒷면 커버 (7) 에서 제거해 DP(A) 의후면 커버 (7) 를 제거합니다 .

4. DP 의 높이를 조정합니다 .
너트 (8) 를 느슨하게 합니다 .
샘플 카피 (f) 의 경우:조정나사 (9) 를 느슨하게 합니다 .
샘플 카피 (g) 의 경우:조정나사 (9) 를 조입니다 .
1 개 변화량:약 0.5mm(10)
너트 (8) 를 원래대로 조입니다 .
5. 순서 3 에서 제거한 뒷 커버 (7) 를 원래대로 장착합니다 .

---

2. DP(A) の DP 上カバー(3) を開く。
3. TP ビス (4)3 本とビス (5)1 本を外し、ストラップ (6) を後カバー(7) から外して、DP(A) の後カバー(7) を取り外す。

4. DP の高さを調整する。
ナット (8) をゆるめる。
コピーサンプル (f) の場合:調整ビス (9) をゆるめる。
コピーサンプル (g) の場合:調整ビス (9) を締める。
1 目盛り当たりの変化量:約 0.5mm(10)
ナット (8) を元通り締める。
5. 手順 3 で取り外した後カバー(7) を元通り取り付ける。

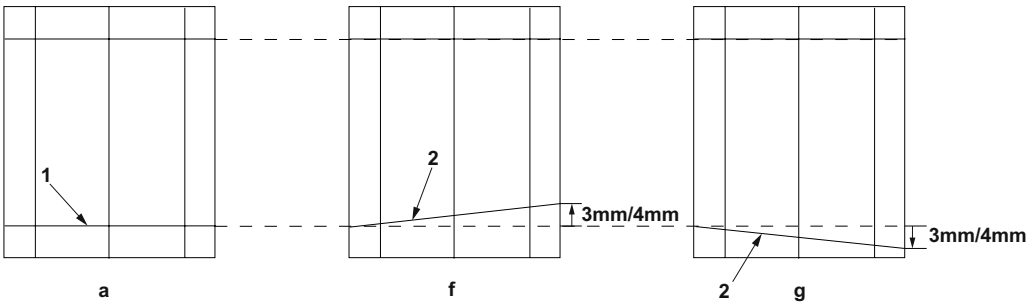

6. Remove the original mat (M) and refit it (see steps 6 on page 2).
7.Make a proof copy again.
8.Repeat steps 1 to 6 until line (2) of copy example shows the following the reference values.
<Reference value> For simplex copying: Within ±3.0 mm
For duplex copying: Within ±4.0 mm

---

6. Retirez le tapis d'original (M) et remettez-le en place (Reportez-vous aux étapes 6 à la page 2).
7.Effectuez à nouveau une copie de test.
8.Répétez les étapes 1 à 6 jusqu'à ce que la ligne (2) de l'exemple de copie corresponde aux valeurs de référence suivantes.
<Valeur de référence> Copie recto seul: ±3,0 mm max.
Copie recto verso: ±4,0 mm max.

---

6. Desmonte la plancha de original (M) y vuelva a colocar (vea los pasos 6 en la página 2).
7.Haga otra copia de prueba.
8.Repita los pasos 1 a 6 hasta que la línea (2) de la copia de muestra tenga los siguientes valores de referencia.
<Valor de referencia> Para copia simple: Dentro de ±3,0 mm
Para copia duplex: Dentro de ±4,0 mm

---

6. Die Originalmatte (M) abnehmen und wieder anbringen (siehe Schritte 6 auf Seite 2) .
7.Eine erneute Probekopie anfertigen.
8.Die Schritte 1 bis 6 wiederholen, bis die Linie (2) des Kopienmusters die folgenden Bezugswerte aufweist.
<Bezugswert> Für Simplexkopie: Innerhalb ±3,0 mm
Für Duplexkopie: Innerhalb ±4,0 mm

---

6. Rimuovere il coprioriginale (M) e reinserirlo (vedere i passi 6 a pagina 2).
7.Eseguire di nuovo una prova di copia.
8.Ripetere i passi da 1 a 6 fino a che la linea (2) dell'esempio di copia non mostra i seguenti valori di riferimento.
<Valore di riferimento> Per copia simplex: Entro ±3,0 mm
Per copia duplex: Entro ±4,0 mm

---

6. 拆下原稿垫(M),参照第 2 页的步骤 6 再次装上。
7. 再次进行测试复印。
8. 反复操作步骤 1~6,直至复印样张的线(2)为标准值内。
〈标准值〉单面时:±3.0mm 以内
双面时:±4.0mm 以内

---

6. 원고매트(M)를 제거하고 2 페이지 순서 6 을 참고로 다시 부착합니다 .
7. 다시 테스트 카피를 합니다 .
8. 샘플 카피 선(2)이 기준치내로 될 때까지 순서 1 ~ 6 을 반복합니다 .
<기준치>단면의 경우:±3.0mm 이내
양면의 경우:±4.0mm 이내

---

6. 原稿マット(M)を取り外し、2 ページの手順 6 を参考に再度取り付ける。
7. 再度テストコピーをおこなう。
8. コピーサンプルの線(2)が基準値内になるまで、手順 1 ～ 6 を繰り返す。
＜基準値＞片面の場合:±3.0mm 以内
両面の場合:±4.0mm 以内

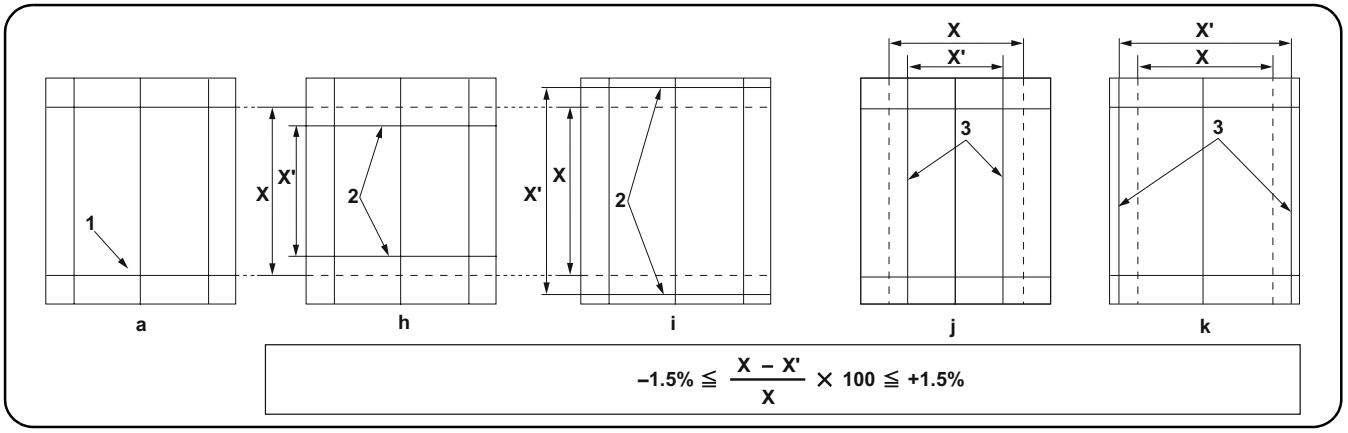

[Checking the magnification]

1. Check the gap between line (1) of original (a) and line (2) (3) of copy example. If the gap exceeds the reference value, adjust the gap according to the following procedure.
<Reference value>
For the sub-scan direction, vertical gap of line (2): within ±1.5%
For the main-scan direction, horizontal gap of line (3): within ±1.5%

2. Use the maintenance mode U070 to adjust the sub scan direction
Sub Scan(F): Adjusts the scanner sub-scan magnification (front side)
Sub Scan(B): Adjusts the scanner sub-scan magnification (rear side)
Sub Scan (CIS): Adjusts the scanner CIS sub-scan magnification
Use the maintenance mode U065 to adjust the main scan direction by pressing [Main Scan].

[Vérification de l'agrandissement]

1. Vérifier l'écart entre la ligne (1) de l'original (a) et la ligne (2) (3) de l'exemple de copie. Si l'écart excède la valeur de référence, le régler selon la procédure suivante.
<Valeur de référence>
Pour la direction du balayage secondaire, l'écart vertical de la ligne (2) est de ±1,5%
Pour la direction du balayage principal, l'écart horizontal de la ligne (3) est de ±1,5%

2. Utilisez le mode maintenance U070 pour régler la direction de numérisation secondaire
Sub Scan(F): Permet de régler l'agrandissement du balayage secondaire du scanner (recto)
Sub Scan(B): Permet de régler l'agrandissement du balayage secondaire du scanner (arrière)
Sub Scan (CIS): Permet de régler l'agrandissement du balayage secondaire du CIS du scanner
Utilisez le mode maintenance U065 pour régler la direction de numérisation principale en appuyant sur [Main Scan].

[Verificación del cambio de tamaño]

1. Compruebe la separación entre la línea (1) del original (a) y la línea (2) (3) del ejemplo de copia. Si la separación supera el valor de referencia, ajústela siguiendo este procedimiento.
<Valor de referencia>
Para la dirección de exploración secundaria, separación vertical de la línea (2): dentro de ±1,5%
Para la dirección de exploración principal, separación horizontal de la línea (3): dentro de ±1,5%

2. Use el modo de mantenimiento U070 para ajustar la dirección de escaneado secundario
Sub Scan(F): Ajusta el cambio de tamaño de la dirección de exploración secundaria del escáner.(anverso)
Sub Scan(B): Ajusta el cambio de tamaño de la dirección de exploración secundaria del escáner(reverso).
Sub Scan (CIS): Ajusta el cambio de tamaño de la dirección de exploración secundaria CIS del escáner
Use el modo de mantenimiento U065 para ajustar la dirección de escaneado principal pulsando [Main Scan].

[Überprüfen der Vergrößerung]

1. Den Abstand zwischen der Linie (1) des Originals (a) und der Linie (2) (3) des Kopierbeispiels prüfen. Wenn der Abstand größer als der Bezugswert ist, den Abstand mit dem folgenden Verfahren einstellen.
<Bezugswert>
Subscanrichtung: Vertikaler Abstand der Linie (2): Innerhalb ±1,5%
Hauptscanrichtung: Horizontaler Abstand der Linie (3): Innerhalb ±1,5%

2. Zum Einstellen der Subscanrichtung den Wartungsmodus U070 verwenden.
Sub Scan(F): Zur Einstellung der Subscan-Vergrößerung(Vorderseite)
Sub Scan(B): Zur Einstellung der Subscan-Vergrößerung(Rückseite)
Sub Scan (CIS): Zur Einstellung der Scanner-CIS-Subscan-Vergrößerung
Zum Einstellen der Hauptscanrichtung den Wartungsmodus U065 verwenden, indem Sie auf [Main Scan] drücken.

[Controllo dell'ingrandimento]

1. Verificare lo scostamento fra la linea (1) dell'originale (a) e la linea (2) (3) dell'esempio di copia. Se lo scostamento supera il valore di riferimento, regolare lo scostamento stesso seguendo questa procedura.
<Valore di riferimento>
Per l'orientamento della scansione ausiliare, lo scostamento verticale della linea (2) deve essere compreso fra ±1,5%
Per l'orientamento della scansione principale, lo scostamento orizzontale della linea (3) deve essere compreso fra ±1,5%

2. Usare la modalità di manutenzione U070 per regolare l'orientamento della scansione secondaria
Sub Scan(F): Regola l'ingrandimento della scansione ausiliare dello scanner(fronte)
Sub Scan(B): Regola l'ingrandimento della scansione ausiliare dello scanner(lato posteriore)
Sub Scan (CIS): Regola l'ingrandimento della scansione ausiliare CIS dello scanner
Usare la modalità di manutenzione U065 per regolare l'orientamento della scansione principale premendo [Main Scan].

[确认等倍值]

1. 确认原稿 (a) 上的线 (1) 和复印样本上的线 (2)、(3) 之间的偏移值。
如果偏移值超过标准值，则按照下列步骤进行调整。
〈 标准值 〉
对于副扫描方向，线 (2) 的上下偏移值 : ±1.5% 以内
对于主扫描方向，线 (3) 的左右偏移值 : ±1.5% 以内

2. 使用维修模式 U070 调整副扫描方向。
Sub Scan(F) : 读取副扫描等倍度的调整 (正面)
Sub Scan(B) : 读取副扫描等倍度的调整 (反面)
Sub Scan(CIS) : CIS 的读取副扫描等倍度的调整
使用维修模式 U065 通过按 [Main Scan] 来调整主扫描方向。

[등배도확인]

1. 원고 (a) 선 (1) 과 샘플 카피의 선 (2)(3) 의 차이를 확인합니다 .
차이가 기준이외의 경우 , 다음 순서로 조정을 합니다 .
< 기준치 >
부주사 방향의 경우 선 (2) 의 상하차이 : ±1.5% 이내
주주사 방향의 경우 선 (3) 의 좌우차이 : ±1.5% 이내

2. 메인터넌스 모드 U070 을 사용하여 서브 스캔 방향을 조정하십시오 .
Sub Scan(F) : 스캔 부주사등배도의 조정 (표면)
Sub Scan(B) : 스캔 부주사등배도의 조정 (뒷면)
Sub Scan(CIS) : CIS 의 스캔 부주사 등배도의 조정
메인터넌스 모드 U065 를 사용하여 [Main Scan] 을 눌러 주 스캔 방향을 조정하십시오 .

[等倍度確認]

1. 原稿 (a) の線 (1) とコピーサンプルの線 (2) (3) のずれを確認する。
ずれが基準値外の場合、次の手順で調整を行う。
< 基準値 >
副走査方向の場合、線 (2) の上下ずれ : ±1.5% 以内
主走査方向の場合、線 (3) の左右ずれ : ±1.5% 以内

2. 副走査方向はメンテナンスモード U070 をセットし、調整を行う。
Sub Scan(F) : 読み取り副走査等倍度の調整 (表面)
Sub Scan(B) : 読み取り副走査等倍度の調整 (裏面)
Sub Scan(CIS) : CIS の読み取り副走査等倍度の調整
主走査方向はメンテナンスモード U065 をセットし、[Main Scan] を押して調整を行う。

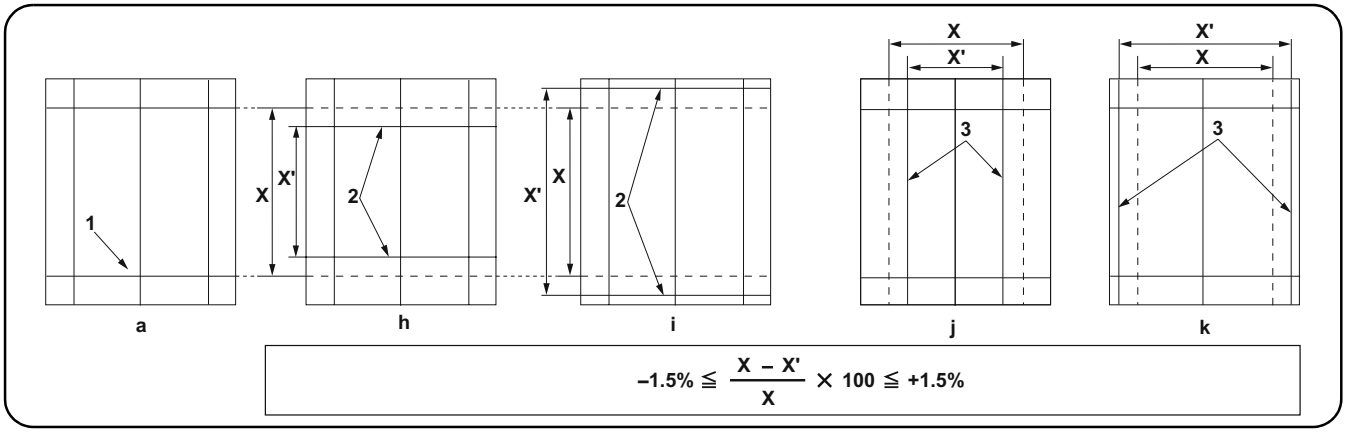

3. Adjust the values.
For the shorter length copy example (h)(j): Increases the value.
For the longer length copy example (i)(k): Decreases the value.
Amount of change per step: 0.1 %
4. Perform a test copy.
5. Repeat the steps 2 to 4 above until the gap of line (2) (3) of copy example shows the reference value.
<Reference value>
For the sub-scan direction, vertical gap of line (2): within ±1.5%
For the main-scan direction, horizontal gap of line (3): within ±1.5%

3. Régler les valeurs.
Pour l'exemple de copie dont la longueur est plus courte (h)(j) : augmenter la valeur.
Pour l'exemple de copie dont la longueur est plus longue (i)(k) : diminuer la valeur.
Changement par graduation d'échelle : 0,1 %
4. Effectuer une copie de test.
5. Répéter les étapes 2 à 4 jusqu'à ce que l'écart de la ligne (2) (3) de l'exemple de copie indique la valeur de référence.
<Valeur de référence>
Pour la direction du balayage secondaire, l'écart vertical de la ligne (2) est de ±1,5%
Pour la direction du balayage principal, l'écart horizontal de la ligne (3) est de ±1,5%

3. Ajuste los valores.
Para el ejemplo de copia más corto (h)(j): aumenta el valor.
Para el ejemplo de copia más largo (i)(k): disminuye el valor.
Magnitud del cambio por incremento: 0,1 %
4. Haga una copia de prueba.
5. Repita los pasos 2 a 4 anteriores hasta que la separación de la línea (2) (3) del ejemplo de copia presente el valor de referencia.
<Valor de referencia>
Para la dirección de exploración secundaria, separación vertical de la línea (2): dentro de ±1,5%
Para la dirección de exploración principal, separación horizontal de la línea (3): dentro de ±1,5%

3. Die Werte einstellen.
Für die kürzere Länge des Kopierbeispiels (h)(j): Den Wert erhöhen.
Für die längere Länge des Kopierbeispiels (i)(k): Den Wert verringern.
Änderung pro Schritt: 0,1 %
4. Eine Testkopie erstellen.
5. Die Schritte 2 bis 4 wiederholen, bis der Abstand der Linie (2) (3) des Kopierbeispiels den Bezugswert aufweist.
<Bezugswert>
Subscanrichtung: Vertikaler Abstand der Linie (2): Innerhalb ±1,5%
Hauptscanrichtung: Horizontaler Abstand der Linie (3): Innerhalb ±1,5%

3. Regolare i valori.
Per l'esempio di copia di lunghezza inferiore (h)(j): aumenta il valore.
Per l'esempio di copia di lunghezza superiore (i)(k): riduce il valore.
Entità modifica per passo: 0,1 %
4. Eseguire una copia di prova
5. Ripetere le operazioni sopra descritte da 2 a 4 fino a quando lo scostamento della linea (2) (3) dell'esempio di copia riporterà i valori di riferimento.
<Valore di riferimento>
Per l'orientamento della scansione ausiliare, lo scostamento verticale della linea (2) deve essere compreso fra ±1,5%
Per l'orientamento della scansione principale, lo scostamento orizzontale della linea (3) deve essere compreso fra ±1,5%

3. 调整设定值。
在长度偏短时　复印样本（h）（j）：调高设定值
在长度偏长时　复印样本（i）（k）：调低设定值
设定值的一个调整单位变化量：0.1%
4. 进行测试复印。
5. 重复上述步骤 2 到 4，直至复印样本上的线（2）、（3）之间的偏移值达到标准值范围内。
〈标准值〉
对于副扫描方向，线（2）的上下偏移值：±1.5% 以内
对于主扫描方向，线（3）的左右偏移值：±1.5% 以内

3. 설정치를 조정합니다 .
길이가 짧은 경우 샘플 카피 (h)(j):설정치를 높입니다 .
길이가 긴 경우 샘플 카피 (i)(k):설정치를 내립니다 .
1 스텝당 변화량:0.1%
4. 테스트 카피를 합니다 .
5. 샘플 카피 선 (2)(3) 의 차이가 기준치내가 될 때까지 2 ~ 4 를 반복합니다 .
＜기준치＞
부주사 방향의 경우 선 (2) 의 상하차이:±1.5% 이내
주주사 방향의 경우 선 (3) 의 좌우차이:±1.5% 이내

3. 設定値を調整する。
長さが短い場合コピーサンプル (h)(j):設定値を上げる
長さが長い場合コピーサンプル (i)(k):設定値を下げる
1 ステップ当たりの変化量:0.1%
4. テストコピーを行う。
5. コピーサンプルの線 (2)(3) のずれが基準値内になるまで手順 2 ～ 4 を繰り返す。
＜基準値＞
副走査方向の場合、線 (2) の上下ずれ:±1.5% 以内
主走査方向の場合、線 (3) の左右ずれ:±1.5% 以内

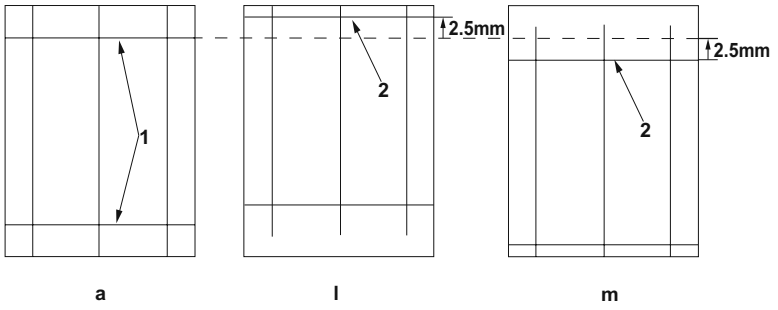

[Checking the leading edge timing]

1. Check the gap between line (1) on original (a) and line (2) of copy example. If the gap exceeds the reference value, adjust the gap according to the following procedure.
<Reference value>
Vertical gap of line (2): within ±2.5 mm

2. Use the maintenance mode U071 to adjust the timing.
Front Head: Adjusts the leading edge timing (front side)
Front Tail: Adjusts the trailing edge timing (front side)
CIS Head: Adjusts the leading edge timing for CIS scanning.
CIS Tail: Adjusts the trailing edge timing for CIS scanning.

[Vérification de la synchronisation du bord avant]

1. Vérifier l'écart entre la ligne (1) de l'original (a) et la ligne (2) de l'exemple de copie. Si l'écart excède la valeur de référence, le régler selon la procédure suivante.
<Valeur de référence>
Écart vertical de la ligne (2) : ±2,5 mm

2. Pour régler la synchronisation, utilisez le mode entretien U071.
Front Head: Permet de régler la synchronisation du bord de tête (recto)
Front Tail: Permet de régler la synchronisation du bord arrière (recto)
CIS Head: Permet de régler la synchronisation du bord de tête pour le balayage par le CIS.
CIS Tail: Permet de régler la synchronisation du bord arrière pour le balayage par le CIS.

[Cambio de la sincronización de borde superior]

1. Compruebe la separación entre la línea (1) del original (a) y la línea (2) del ejemplo de copia. Si la separación supera el valor de referencia, ajústela siguiendo este procedimiento.
<Valor de referencia>
Separación vertical de la línea (2): dentro de ±2,5 mm

2. Para ajustar la sincronización utilice el modo de mantenimiento U071.
Front Head: Ajusta la sincronización del borde superior (anverso).
Front Tail: Ajusta la sincronización del borde inferior (anverso).
CIS Head: Ajusta la sincronización del borde superior para exploración CIS.
CIS Tail: Ajusta la sincronización del borde inferior para exploración CIS.

[Überprüfen des Vorderkanten-Timings]

1. Den Abstand zwischen der Linie (1) des Originals (a) und der Linie (2) des Kopierbeispiels prüfen. Wenn der Abstand größer als der Bezugswert ist, den Abstand mit dem folgenden Verfahren einstellen.
<Bezugswert>
Vertikaler Abstand der Linie (2): Innerhalb ±2,5 mm

2. Zum Einstellen des Timing den Wartungsmodus U071 verwenden.
Front Head: Zur Einstellung des Vorderkanten-Timing (Vorderseite)
Front Tail: Zur Einstellung des Hinterkanten-Timing (Vorderseite)
CIS Head: Zur Einstellung des Vorderkanten-Timing für CIS-Scannen.
CIS Tail: Zur Einstellung des Hinterkanten-Timing für CIS-Scannen.

[Controllo della sincronizzazione del bordo principale]

1. Verificare lo scostamento fra la linea (1) sull'originale (a) e la linea (2) dell'esempio di copia. Se lo scostamento supera il valore di riferimento, regolare lo scostamento stesso seguendo questa procedura.
<Valore di riferimento>
Scostamento verticale della linea (2) compreso fra ±2,5 mm

2. Usare la modalità di manutenzione U071 per regolare la sincronizzazione.
Front Head: Regola la sincronizzazione del bordo principale (fronte)
Front Tail: Regola la sincronizzazione del bordo di uscita (fronte)
CIS Head: Regola la sincronizzazione del bordo principale per scansione CIS.
CIS Tail: Regola la sincronizzazione del bordo di uscita per scansione CIS.

[确认前端定时调整]

1. 确认原稿 (a) 上的线 (1) 和复印样本上的线 (2) 之间的偏移值。如果偏移值超过标准值，则按照下列步骤进行调整。
〈标准值〉
线 (2) 的上下偏移值 : ±2.5mm 以内

2. 使用维修模式 U071 调整定时。
Front Head : 调整前端定时 (正面)
Front Tail : 调整后端定时 (正面)
CIS Head : 调整 CIS 读取时的前段对位
CIS Tail : 调整 CIS 读取时的后端定时

[선단 타이밍확인]

1. 원고 (a) 선 (1) 과 샘플 카피 선 (2) 의 차이를 확인합니다 . 차이가 기준치 외의 경우 다음 순서로 조정을 합니다 .
< 기준치 >
선 (2) 의 상하차이 : ±2.5mm 이내

2. 메인터넌스 모드 U071 을 세트하고 조정을 합니다 .
Front Head : 선단 타이밍 (표면) 을 조정합니다 .
Front Tail : 후단 타이밍 (표면) 을 조정합니다 .
CIS Head: CIS 스캔 시의 선단 타이밍을 조정합니다 .
CIS Tail: CIS 스캔 시의 후단 타이밍을 조정합니다 .

[先端タイミング確認]

1. 原稿 (a) の線 (1) とコピーサンプルの線 (2) のずれを確認する。ずれが基準値外の場合、次の手順で調整を行う。
＜基準値＞
線 (2) の上下ずれ : ±2.5mm 以内

2. メンテナンスモード U071 をセットし、調整を行う。
Front Head : 先端タイミング (表面) を調整する
Front Tail : 後端タイミング (表面) を調整する
CIS Head: CIS 読み込み時の先端タイミングを調整する
CIS Tail: CIS 読み込み時の後端タイミングを調整する

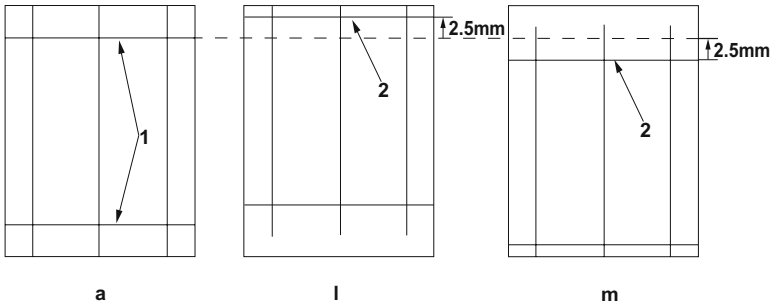

3. Adjust the values.
For the shorter leading edge timing, copy examples (l): Decreases the value.
For the longer leading edge timing, copy examples (m): Increases the value.
Amount of change per step: 0.5 mm
4. Perform a test copy.
5. Repeat the steps 2 to 4 above until the gap of line (2) of copy example shows the reference value.
<Reference value>
Vertical gap of line (2): within ±2.5 mm

---

3. Régler les valeurs.
Pour les exemples de copie dont la synchronisation du bord avant est plus rapide (l) : diminuer la valeur.
Pour les exemples de copie dont la synchronisation du bord avant est plus lente (m) : augmenter la valeur.
Changement par graduation d'échelle : 0,5 mm
4. Effectuer une copie de test.
5. Répéter les étapes 2 à 4 jusqu'à ce que l'écart de la ligne (2) de l'exemple de copie indique la valeur de référence.
<Valeur de référence>
Écart vertical de la ligne (2) : ±2,5 mm

---

3. Ajuste los valores.
Para una sincronización más rápida de extremo guía, ejemplos de copia (l): disminuye el valor.
Para una sincronización más lenta de extremo guía, ejemplos de copia (m): aumenta el valor.
Magnitud del cambio por incremento: 0,5 mm
4. Haga una copia de prueba.
5. Repita los pasos 2 a 4 anteriores hasta que la separación de la línea (2) del ejemplo de copia presente el valor de referencia.
<Valor de referencia>
Separación vertical de la línea (2): dentro de ±2,5 mm

---

3. Die Werte einstellen.
Für den schnelleren Vorderkantentakt, Kopierbeispiel (l): Den Wert verringern.
Für den langsameren Vorderkantentakt, Kopierbeispiel (m): Den Wert erhöhen.
Änderung pro Schritt: 0,5 mm
4. Eine Testkopie erstellen.
5. Die Schritte 2 bis 4 wiederholen, bis der Abstand der Linie (2) des Kopierbeispiels den Bezugswert aufweist.
<Bezugswert>
Vertikaler Abstand der Linie (2): Innerhalb ±2,5 mm

---

3. Regolare i valori.
Per accelerare la fasatura del bordo di entrata, esempi di copia (l): riduce il valore.
Per rallentare la fasatura del bordo di entrata, esempi di copia (m): aumenta il valore.
Entità modifica per passo: 0,5 mm
4. Eseguire una copia di prova
5. Ripetere le operazioni sopra descritte da 2 a 4 fino a quando lo scostamento della linea (2) dell'esempio di copia riporterà i valori di riferimento.
<Valore di riferimento>
Scostamento verticale della linea (2) compreso fra ±2,5 mm

---

3. 调整设定值。
在前端定时偏快时　复印样本（l）：调低设定值
在前端定时偏慢时　复印样本（m）：调高设定值
设定值的一个调整单位变化量：0.5㎜
4. 进行测试复印。
5. 重复上述步骤 2 到 4，直至复印样本上的线（2）的偏移值达到标准值范围内。
〈标准值〉
线（2）的上下偏移值：±2.5㎜以内

---

3. 설정치를 조정합니다 .
선단 타이밍이 빠른 경우 샘플 카피 (l):설정치를 내립니다 .
선단 타이밍이 늦은 경우 샘플 카피 (m):설정치를 올립니다 .
1 스텝당 변화량:0.5mm
4. 테스트 카피를 합니다 .
5. 샘플 카피 선 (2) 의 차이가 기준치내가 될 때까지 2 ~ 4 를 반복합니다 .
＜기준치＞
선 (2) 의 상하차이:±2.5mm 이내

---

3. 設定値を調整する。
先端タイミングが短い場合コピーサンプル (l):設定値を下げる。
先端タイミングが長い場合コピーサンプル (m):設定値を上げる。
1 ステップ当たりの変化量:0.5㎜
4. テストコピーを行う。
5. コピーサンプルの線 (2) のずれが基準値内になるまで手順 2 ～ 4 を繰り返す。
＜基準値＞
線 (2) の上下ずれ:±2.5㎜以内

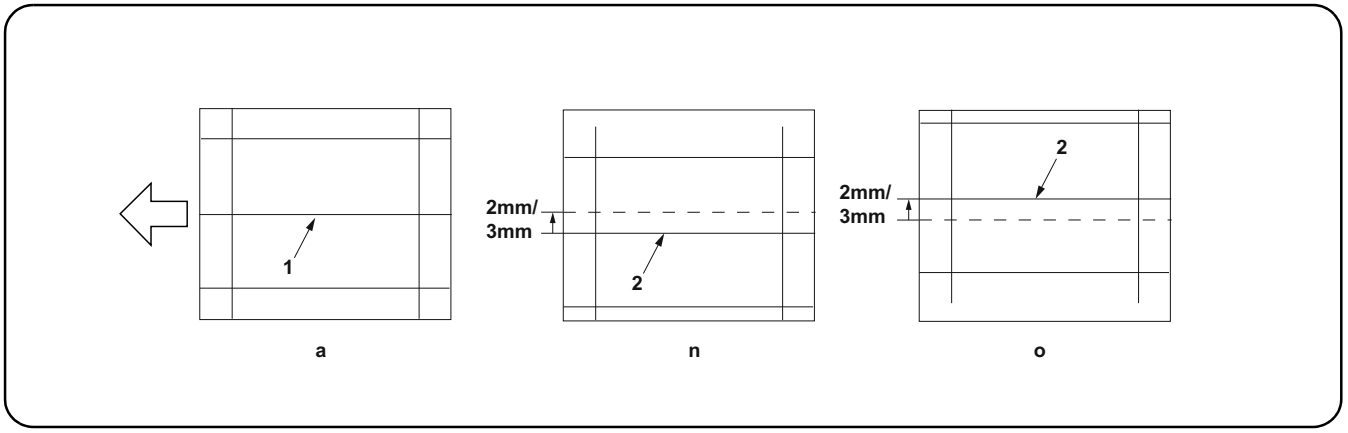

[Checking the center line]

1. Check the gap between center line (1) on original (a) and center line (2) of copy example. If the gap exceeds the reference value, adjust the gap according to the following procedure.
<Reference value>
Horizontal difference of center line (2) for the single copying: ±2.0 mm
Horizontal difference of center line (2) for the duplex copying: ±3.0 mm

2. Use the maintenance mode U072 to adjust the timing.
Front: Adjusts the center line (front side)
CIS: Adjusts the CIS center line

[Vérification de la ligne médiane]

1. Vérifier l'écart entre l'axe (1) de l'original (a) et l'axe (2) de l'exemple de copie. Si l'écart excède la valeur de référence, le régler selon la procédure suivante.
<Valeur de référence>
Différence horizontale de l'axe (2) pour la copie recto : ±2,0 mm
Différence horizontale de l'axe (2) pour la copie recto-verso : ±3,0 mm

2. Pour régler la ligne médiane, utiliser le mode entretien U072.
Front: Permet de régler l'axe (recto)
CIS: Permet de régler l'axe du CIS

[Verificación de la línea central]

1. Compruebe la separación entre la línea de centro (1) del original (a) y la línea de centro (2) del ejemplo de copia. Si la separación supera el valor de referencia, ajústela siguiendo este procedimiento.
<Valor de referencia>
Diferencia horizontal de la línea de centro (2) para el copiado por una cara: ±2,0 mm
Diferencia horizontal de la línea de centro (2) para el copiado dúplex: ±3,0 mm

2. Para ajustar la línea central utilice el modo de mantenimiento U072.
Front: ajusta la línea central (anverso).
CIS: ajusta la línea central CIS

[Überprüfen der Mittellinie]

1. Den Abstand zwischen der Mittellinie (1) des Originals (a) und der Mittellinie (2) des Kopierbeispiels prüfen. Wenn der Abstand größer als der Bezugswert ist, den Abstand mit dem folgenden Verfahren einstellen.
<Bezugswert>
Horizontaler Unterschied der Mittellinie (2) für die Einzelkopie: ±2,0 mm
Horizontaler Unterschied der Mittellinie (2) für die Duplexkopie: ±3,0 mm

2. Zum Einstellen der Mittellinie den Wartungsmodus U072 verwenden.
Front: Zur Einstellung der Mittellinie (Vorderseite)
CIS: Zur Einstellung der CIS-Mittellinie

[Controllo della linea centrale]

1. Verificare lo scostamento fra la linea centrale (1) sull'originale (a) e la linea centrale (2) dell'esempio di copia. Se lo scostamento supera il valore di riferimento, regolare lo scostamento stesso seguendo questa procedura.
<Valore di riferimento>
Differenza orizzontale della linea centrale (2) per la copia singola: ±2,0 mm
Differenza orizzontale della linea centrale (2) per la copia duplex: ±3,0 mm

2. Usare la modalità di manutenzione U072 per regolare la linea centrale.
Front: Regola la linea centrale (fronte)
CIS: Regola la linea centrale CIS

[确认中心线]

1. 确认原稿 (a) 中心线 (1) 和复印样本中心线 (2) 之间的偏移值。如果偏移值超过标准值，则按照下列步骤进行调整。
〈 标准值 〉 单面复印时，中心线 (2) 的左右偏移值 : ±2.0mm 以内
双面复印时，中心线 (2) 的左右偏移值 : ±3.0mm 以内

2. 使用维修模式 U072 调整中心线。
Front : 中心位置 (正面) 的调整
CIS : CIS 的中心位置的调整

[센터 라인 확인]

1. 원고 (a) 센터라인 (1) 과 샘플 카피 센터라인 (2) 의 차이를 확인합니다 . 차이가 기준치 외의 경우 다음 순서로 조정합니다 .
< 기준치 > 단면의 경우 센터라인 (2) 의 좌우차이 : ±2.0mm 이내
양면의 경우 센터라인 (2) 의 좌우차이 : ±3.0mm 이내

2. 메인터넌스 모드 U072 을 세트하고 조정을 합니다 .
Front: 센터 위치 (표면) 의 조정
CIS: CIS 의 센터 위치조정

[センターライン確認]

1. 原稿 (a) の中心線 (1) とコピーサンプルの中心線 (2) のずれを確認する。ずれが基準値外の場合、次の手順で調整を行う。
＜基準値＞片面の場合、中心線 (2) の左右ずれ : ±2.0mm 以内
両面の場合、中心線 (2) の左右ずれ : ±3.0mm 以内

2. メンテナンスモード U072 をセットし、調整を行う。
Front : センター位置 (表面) の調整
CIS : CIS のセンター位置の調整

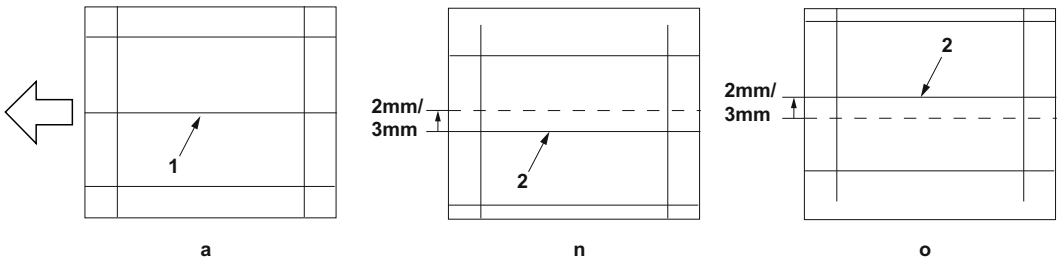

3. Adjust the values.
If the center moves more front, copy example (n): Decreases the value.
If the center moves inner, copy sample (o): Increases the value.
Amount of change per step: 0.085 mm
4. Perform a test copy.
5. Repeat the steps 2 to 4 above until the gap of line (2) of copy example shows the reference value.
<Reference value>
Horizontal difference of center line (2) for the single copying: ±2.0 mm
Horizontal difference of center line (2) for the duplex copying: ±3.0 mm

---

3. Régler les valeurs.
Pour l'exemple de copie (n) dont l'axe se déplace davantage vers l'avant : diminuer la valeur.
Pour l'exemple de copie (o) dont l'axe se déplace vers l'intérieur : augmenter la valeur.
Changement par graduation d'échelle : 0,085 mm
4. Effectuer une copie de test.
5. Répéter les étapes 2 à 4 jusqu'à ce que l'écart de la ligne (2) de l'exemple de copie indique la valeur de référence.
<Valeur de référence>
Différence horizontale de l'axe (2) pour la copie recto : ±2,0 mm
Différence horizontale de l'axe (2) pour la copie recto-verso : ±3,0 mm

---

3. Ajuste los valores.
Si el centro se desplaza más hacia el frente, ejemplo de copia (n): disminuye el valor.
Si el centro se desplaza hacia dentro, ejemplo de copia (0): aumenta el valor.
Magnitud del cambio por incremento: 0,085 mm
4. Haga una copia de prueba.
5. Repita los pasos 2 a 4 anteriores hasta que la separación de la línea (2) del ejemplo de copia presente el valor de referencia.
<Valor de referencia>
Diferencia horizontal de la línea de centro (2) para el copiado por una cara: ±2,0 mm
Diferencia horizontal de la línea de centro (2) para el copiado dúplex: ±3,0 mm

---

3. Die Werte einstellen.
Wenn die Mitte nach vorne verlagert ist, Kopierbeispiel (n): Den Wert verringern.
Wenn die Mitte nach innen verlagert ist, Kopierbeispiel (o): Den Wert erhöhen.
Änderung pro Schritt: 0,085 mm
4. Eine Testkopie erstellen.
5. Die Schritte 2 bis 4 wiederholen, bis der Abstand der Linie (2) des Kopierbeispiels den Bezugswert aufweist.
<Bezugswert>
Horizontaler Unterschied der Mittellinie (2) für die Einzelkopie: ±2,0 mm
Horizontaler Unterschied der Mittellinie (2) für die Duplexkopie: ±3,0 mm

---

3. Regolare i valori.
Se il centro si sposta più avanti, esempio di copia (n): riduce il valore.
Se il centro si sposta verso l'interno, esempio di copia (o): aumenta il valore.
Entità modifica per passo: 0,085 mm
4. Eseguire una copia di prova
5. Ripetere le operazioni sopra descritte da 2 a 4 fino a quando lo scostamento della linea (2) dell'esempio di copia riporterà i valori di riferimento.
<Valore di riferimento>
Differenza orizzontale della linea centrale (2) per la copia singola: ±2,0 mm
Differenza orizzontale della linea centrale (2) per la copia duplex: ±3,0 mm

---

3. 调整设定值。
当中心向前偏移时　复印样本（n）：调低设定值
当中心向内偏移时　复印样本（o）：调高设定值
设定值的一个调整单位变化量：0.085㎜
4. 进行测试复印。
5. 重复上述步骤 2 到 4，直至复印样本上的线（2）的偏移值达到标准值范围内。
〈标准值〉
单面复印时，中心线（2）的左右偏移值：±2.0㎜ 以内
双面复印时，中心线（2）的左右偏移值：±3.0㎜ 以内

---

3. 설정치를 조정합니다 .
센터가 바로 앞으로 틀려 있는 경우 샘플 카피 (n):설정치를 내립니다 .
센터가 안으로 틀려 있는 경우 샘플 카피 (o) : 설정치를 높입니다 .
1 스텝당 변화량:0.085mm
4. 테스트 카피를 합니다 .
5. 샘플 카피 센터라인 (2) 차이가 기준치 내가 될 때까지 순서 2 ~ 4 를 반복합니다 .
＜기준치＞
단면의 경우 센터라인 (2) 의 좌우차이:±2.0mm 이내
양면의 경우 센터라인 (2) 의 좌우차이:±3.0mm 이내

---

3. 設定値を調整する。
センターが手前にずれている場合コピーサンプル (n):設定値を下げる。
センターが奥にずれている場合コピーサンプル (o) 設定値を上げる。
1 ステップ当たりの変化量:0.085㎜
4. テストコピーを行う。
5. コピーサンプルの中心線 (2) ずれが基準値内になるまで手順 2 ～ 4 を繰り返す。
＜基準値＞
片面の場合、中心線 (2) の左右ずれ:±2.0㎜ 以内
両面の場合、中心線 (2) の左右ずれ:±3.0㎜ 以内

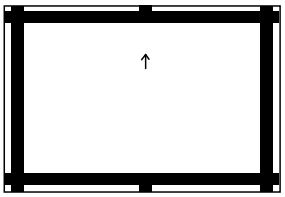

[Automatic adjustment using the original for adjustment]
If there is no DP auto adjustment original.

1. Set the maintenance mode U411 and press [DP Auto Adj] to output the adjustment original.
2. Set the printed original on the contact glass and press the Start key.
3. Set the original on the DP face up and press the Start key to carry out surface adjustment.
4. Set the original on the DP face down and press the Start key to carry out rear-side adjustment.
5. If "OK" appears on the display, the adjustment is completed.
   If the number appears, the adjustment failed. Check the original set position and repeat steps 2 and 4 until "OK" appears.
   For details, see the service manual.

[Réglage automatique en utilisant l'original pour effectuer le réglage]
Si la machine n'est pas pourvue de la fonction réglage automatique d'original du DP

1. Passez en mode maintenance U411 et appuyez sur [DP Auto Adj] pour imprimer l'original de réglage.
2. Placer l'original qui vient d'être imprimé sur la vitre d'exposition et appuyer sur la touche Start.
3. Placer l'original sur le DP côté imprimé en haut et appuyer sur la touche Start pour procéder au réglage de la surface.
4. Placer l'original sur le DP côté imprimé en bas et appuyer sur la touche Start pour procéder au réglage du côté arrière.
5. Si le message "OK" apparaît sur l'affichage, le réglage est terminé. Si le numéro apparaît, le réglage a échoué. Vérififer la position de l'original et recommencer les opérations 2 et 4 jusqu'à ce que le message "OK" apparaisse.
   Pour plus de details, se reporter au manuel d'entretien.

[Ajuste automático utilizando el original para el ajuste]
Si no existe el original de ajuste automático del DP

1. Configure el modo de mantenimiento U411 y pulse [DP Auto Adj] para imprimir el original de ajuste.
2. Coloque el original impreso sobre el cristal de contacto y pulse la tecla de Start.
3. Coloque el original en el DP cara arriba y pulse la tecla de Start para realizar un ajuste de anverso.
4. Coloque el original en el DP cara abajo y pulse la tecla de Start para realizar un ajuste de reverso.
5. Si aparece "OK" en la pantalla significa que el ajuste ha sido realizado. Si aparece el número, el ajuste ha fallado. Compruebe la posición ajustada del original y repita los pasos 2 y 4 hasta que aparezca "OK" en la pantalla.
   Para mas detalles, lea el manual de servicio.

[Automatische Einstellung mithilfe des Originals]
Falls keine automatische Einstellung des Originals des DP vorhanden ist

1. Aktivieren Sie den Wartungsmodus U411 und wählen Sie [DP Auto Adj], um das Original für die Anpassung auszudrucken.
2. Das ausgedruckte Original auf das Kontaktglas legen und die Start-Taste betätigen.
3. Das Original mit der Druckseite nach oben einlegen und die Start-Taste betätigen, um die Oberflächeneinstellung ausführen zu lassen.
4. Das Original mit der Druckseite nach unten einlegen und die Start-Taste betätigen, um die Rückseiteneinstellung ausführen zu lassen.
5. Wenn am Display "OK" angezeigt wird, ist die Einstellung abgeschlossen. Wenn die Zahl angezeigt wird, ist die Einstellung fehlgeschlagen. Überprüfen Sie die Originalpositionierung und wiederholen Sie Schritte 2 und 4, bis "OK" angezeigt wird.
   Weitere Einzelheiten siehe Wartungsanleitung.

[Regolazione automatica eseguita con l'originale]
Se non è presente l'autoregolazione originale DP

1. Impostare la modalità manutenzione U411, quindi premere [DP Auto Adj] per stampare l'originale da utilizzare per la regolazione.
2. Posizionare l'originale stampato sul vetro di appoggio e premere il tasto di Start.
3. Posizionare l'originale sul DP rivolto verso l'alto e premere il tasto di Start per eseguire la regolazione della superficie.
4. Posizionare l'originale sul DP rivolto verso il basso e premere il tasto di Start per eseguire la regolazione del lato posteriore.
5. Se "OK" appare sul display, la regolazione è completata. Se si visualizza il numero, la regolazione non è riuscita. Verificare la posizione di impostazione dell'originale e ripetere le operazioni 2 e 4
   fino a quando appare "OK".
   Per ulteriori dettagli leggere il manuale d'istruzioni.

[通过调整用原稿进行自动调整]
没有 DP 调整用原稿时

1. 进入维修保养模式 U411，选择 [DP Auto Adj]，输出测试原稿。
2. 将输出的原稿放在稿台上，按 Start 键。
3. 将原稿面朝上放在 DP 主机上，按 Start 键以进行正面的调整。
4. 将原稿面朝下放在 DP 主机上，按 Start 键以进行反面的调整。
5. 如果屏幕上出现 "OK"（完成），则表示调整完成。
   如果出现数字，则调整失败。检查原稿设定位置并重复步骤 2 和 4，直到 "OK"（完成）出现。
   详细内容请参照维修手册。

[조정용 원고를 이용한 자동조정]
DP 조정용 원고가 없는 경우

1. 메인터넌스 모드 U411 을 설정하고 [DP Auto Adj] 를 눌러 조정된 원고를 출력합니다 .
2. 출력한 원고를 원고 유리에 장착하고 시작키를 누릅니다 .
3. 원고를 FaceUp 으로 DP 로 세트하고 시작키를 눌러 표면조정을 합니다 .
4. 원고를 FaceDown 으로 DP 에 장착하고 시작키를 눌러 뒷면조정을 합니다 .
5. 디스플레이에 "OK" 가 표시되면 조정완료가 됩니다 .
   숫자가 나타나면 조정이 실패했습니다 . 원고 장착위치를 확인하고 "OK" 가 표시될 때까지 순서 2 ~ 4 를 반복합니다 .
   상세는 서비스 매뉴얼을 참조 .

[調整用原稿による自動調整]
DP 調整用原稿が無い場合

1. メンテナンスモード U411 をセットし、[DP Auto Adj] を押し原稿を出力する。
2. 出力した原稿をコンタクトガラス上にセットし、スタートキーを押す。
3. 原稿を FaceUp で DP へセットし、スタートキーを押し、表面の調整を行う。
4. 原稿を FaceDown で DP へセットし、スタートキーを押し、裏面の調整を行う。
5. ディスプレイに「OK」が表示されれば調整完了となる。
   数字が表示された場合は調整失敗である。原稿のセット位置を確認し、「OK」が表示されるまで手順 2 ～ 4 を繰り返す。
   詳細はサービスマニュアルを参照のこと。

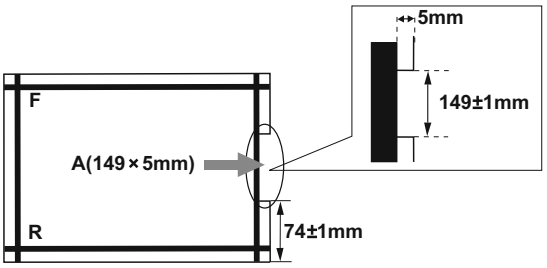

Using a DP auto adjustment original

1. Direct F and R of the DP auto adjustment original upward, and set the original from the place where F and R are marked.
2. Set the maintenance mode U411. Press the [DP FU(ChartB)] and the Start key in that order to carry out surface adjustment.
3. If “OK” appears on the display, the adjustment is completed.
If the number appears, the adjustment failed. Check the original set position and repeat steps 1 and 2 until “OK” appears.
For details, see the service manual.

Avec la fonction réglage automatique d'original du DP

1. Diriger F (avant) et R (arrière) de la fonction de réglage automatique d’original du DP vers le haut, puis placer l’original à partir de l’emplacement des repères F et R.
2. Passer au mode maintenance U411. Appuyer sur les touches [DP FU(ChartB)] et Start dans cet ordre pour procéder au réglage de la surface.
3. Si le message “OK” apparaît sur l'affichage, le réglage est terminé.
Si le numéro apparaît, le réglage a échoué. Vérififer la position de l'original et recommencer les opérations 1 et 2 jusqu'à ce que le message “OK” apparaisse.
Pour plus de details, se reporter au manuel d’entretien.

Uso del original de ajuste automático del DP

1. Dirija F y R del original de ajuste automático del DP hacia arriba, y coloque el original a partir del sitio en que están marcados F y R.
2. Entre en el modo de mantenimiento U411. Pulse las teclas [DP FU(ChartB)] y la tecla de Start, en ese orden, para realizar el ajuste de anverso.
3. Si aparece “OK” en la pantalla significa que el ajuste ha sido realizado.
Si aparece el número, el ajuste ha fallado. Compruebe la posición ajustada del original y repita los pasos 1 y 2 hasta que aparezca “OK” en la pantalla.
Para mas detalles, lea el manual de servicio.

Gebrauch der automatischen Einstellung des Originals des DP

1. F und R der automatischen Einstellung des Originals des DP nach oben zeigen und das Original an die mit F und R markierte Stelle setzen.
2. Den Wartungsmodus U411 einschalten. [DP FU(ChartB)] und die Start-Taste in dieser Reihenfolge betätigen, um die Oberflächeneinstellung ausführen zu lassen.
3. Wenn am Display “OK” angezeigt wird, ist die Einstellung abgeschlossen. Wenn die Zahl angezeigt wird, ist die Einstellung fehlgeschlagen. Überprüfen Sie die Originalpositionierung und wiederholen Sie Schritte 1 und 2, bis “OK” angezeigt wird.
Weitere Einzelheiten siehe Wartungsanleitung.

Uso di un'autoregolazione originale DP

1. Orientare F e R dell’autoregolazione originale DP verso l’alto e disporre l’originale rispetto ai punti in cui sono contrassegnati F e R.
2. Impostare la modalità manutenzione U411. Premere nell'ordine [DP FU(ChartB)] e il tasto di Start, per eseguire la regolazione della superficie.
3. Se “OK” appare sul display, la regolazione è completata. Se si visualizza il numero, la regolazione non è riuscita. Verificare la posizione di impostazione dell'originale e ripetere le operazioni 1 e 2
fino a quando appare “OK”.
Per ulteriori dettagli leggere il manuale d’istruzioni.

使用 DP 自动调整用稿时

1. 将 DP 自动调整原稿的 F 和 R 向上，并把标有 F 和 R 的一侧插入 DP 来设定原稿。
2. 设置维护模式 U411，按顺序按 [DP FU(ChartB)]、Start 键以进行正面的调整。
3. 如果屏幕上出现 ”OK”（完成），则表示调整完成。
如果出现数字，则调整失败。检查原稿设定位置并重复步骤 1 和 2，直到 ”OK”（完成）出现。
详细内容请参照维修手册。

DP 자동조정용 원고를 사용하는 경우

1. DP 자동 조정 원고를 F, R 을 위로 향하게 하고 F, R 이라고 표시된 곳에서 부터 원고를 셋팅합니다 .
2. 메인터넌스 모드 U411 을 세트하고 [DP FU(ChartB)], 시작키의 순서로 눌러 표면 조정을 합니다 .
3. 디스플레이에 “OK” 가 표시되면 조정완료가 됩니다 .
숫자가 나타나면 조정이 실패했습니다 . 원고 장착위치를 확인하고 “OK” 가 표시될 때까지 순서 1 ~ 2 를 반복합니다 .
상세는 서비스 매뉴얼을 참조 .

DP 自動調整原稿を使用する場合

1. DP 自動調整原稿の F、R を上に向け、F、R が書かれている方から DP へセットする。
2. メンテナンスモード U411 をセットし、[DP FU(ChartB)]、スタートキーの順に押し、表面の調整を行う。
3. ディスプレイに「OK」が表示されれば調整完了となる。
数字が表示された場合は調整失敗である。原稿のセット位置を確認し、「OK」が表示されるまで手順 1 ～ 2 を繰り返す
詳細はサービスマニュアルを参照のこと。

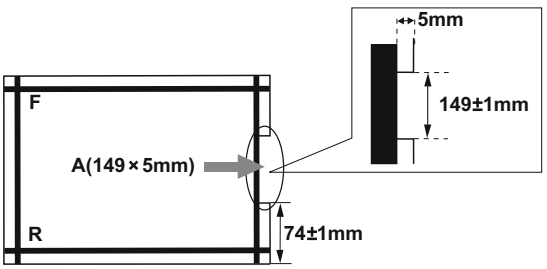

4. After completing the surface adjustment, direct F and R of the DP auto adjustment original downward and set the original by inserting the side where the F and R are marked into the DP first.
5. Set the maintenance mode U411. Press the [DP FD(ChartB)] and the Start key in that order to carry out rear-side adjustment.

6. If "OK" appears on the display, the adjustment is completed.
If the number appears, the adjustment failed. Check the original set position and repeat steps 4 and 5 until "OK" appears.
For details, see the service manual.

---

4. Une fois le réglage de la surface effectué, diriger F (avant) et R (arrière) de la fonction de réglage automatique d'original du DP vers le bas et placer l'original en introduisant en premier dans le DP le côté sur lequel F et R sont indiqués.
5. Passer au mode maintenance U411. Appuyer sur les touches [DP FD(ChartB)] et Start dans cet ordre pour procéder au réglage du côté arrière.

6. Si le message "OK" apparaît sur l'affichage, le réglage est terminé.
Si le numéro apparaît, le réglage a échoué. Vérififer la position de l'original et recommencer les opérations 4 et 5 jusqu'à ce que le message "OK" apparaisse.
Pour plus de details, se reporter au manuel d'entretien.

---

4. Una vez hecho el ajuste del anverso, dirija F y R del original de ajuste automático del DP hacia abajo y coloque el original insertando en el DP, en primer lugar, el lado en el que están marcados F y R.
5. Entre en el modo de mantenimiento U411. Pulse las teclas [DP FD(ChartB)] y la tecla de Start, en ese orden, para realizar el ajuste de reverso.

6. Si aparece "OK" en la pantalla significa que el ajuste ha sido realizado.
Si aparece el número, el ajuste ha fallado. Compruebe la posición ajustada del original y repita los pasos 4 y 5 hasta que aparezca "OK" en la pantalla.
Para mas detalles, lea el manual de servicio.

---

4. Nach dem Abschluss der Oberflächeneinstellung F und R der automatischen Einstellung des Originals des DP nach unten zeigen und das Original einstellen, indem die mit F und R markierte Seite zuerst in den DP eingeführt wird.
5. Den Wartungsmodus U411 einschalten. [DP FD(ChartB)] und die Start-Taste in dieser Reihenfolge betätigen, um die Rückseiteneinstellung ausführen zu lassen.

6. Wenn am Display "OK" angezeigt wird, ist die Einstellung abgeschlossen.
Wenn die Zahl angezeigt wird, ist die Einstellung fehlgeschlagen. Überprüfen Sie die Originalpositionierung und wiederholen Sie Schritte 4 und 5, bis "OK" angezeigt wird.
Weitere Einzelheiten siehe Wartungsanleitung.

---

4. Una volta conclusa la regolazione della superficie, orientare F e R dell'autoregolazione originale DP verso il basso e disporre l'originale inserendo nel DP prima il lato su cui sono contrassegnati F e R.
5. Impostare la modalità manutenzione U411. Premere nell'ordine [DP FD(ChartB)] e il tasto di Start, per eseguire la regolazione del lato posteriore.

6. Se "OK" appare sul display, la regolazione è completata. Se si visualizza il numero, la regolazione non è riuscita. Verificare la posizione di impostazione dell'originale e ripetere le operazioni 4 e 5 fino a quando appare "OK".
Per ulteriori dettagli leggere il manuale d'istruzioni.

---

4. 完成正面调整后，将 DP 自动调整原稿的 F 和 R 向下，并首先将标有 F 和 R 的一侧插入 DP 来设定原稿。
5. 设置维护模式 U411，按顺序按 [DP FD(ChartB)]、Start 键以进行反面的调整。

6. 如果屏幕上出现 "OK"（完成），则表示调整完成。
如果出现数字，则调整失败。检查原稿设定位置并重复步骤 4 和 5，直到 "OK"（完成）出现。
详细内容请参照维修手册。

---

4. 표면의 조정완료 후 DP 자동조정원고의 F, R 을 아래로 향하게 해 F, R 이 쓰여져 있는 쪽에서 DP 로 세트합니다 .
5. 메인터넌스 모드 U411 을 세트하고 [DP FD(ChartB)], 시작키 순서로 뒷면조정을 합니다 .

6. 디스플레이에 "OK" 가 표시되면 조정완료가 됩니다 .
숫자가 나타나면 조정이 실패했습니다 . 원고 장착위치를 확인하고 "OK" 가 표시될 때까지 순서 4 ~ 5 를 반복합니다 .
상세는 서비스 매뉴얼을 참조

---

4. 表面の調整完了後、DP 自動調整原稿の F、R を下に向け、F、R が書かれている方から DP へセットする。
5. メンテナンスモード U411 をセットし、[DP FD(ChartB)]、スタートキーの順に押し、裏面の調整を行う。

6. ディスプレイに「OK」が表示されれば調整完了となる。
数字が表示された場合は調整失敗である。原稿のセット位置を確認し、「OK」が表示されるまで手順 4 ～ 5 を繰り返す。
詳細はサービスマニュアルを参照のこと。



2020.2
303TC5671001

FAX System 12

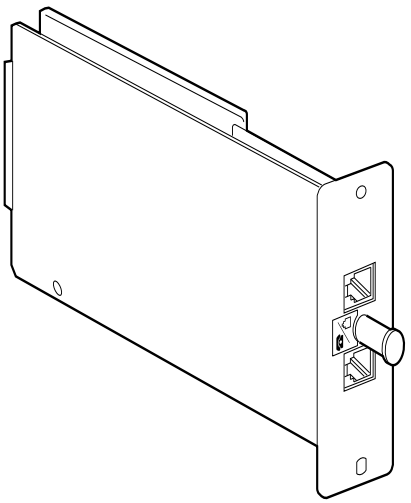

INSTALLATION GUIDE

GUIDE D'INSTALLATION

GUÍA DE INSTALACION

INSTALLATIONSANLEITUNG

GUIDA ALL'INSTALLAZIONE

安装手册

설치안내서

設置手順書

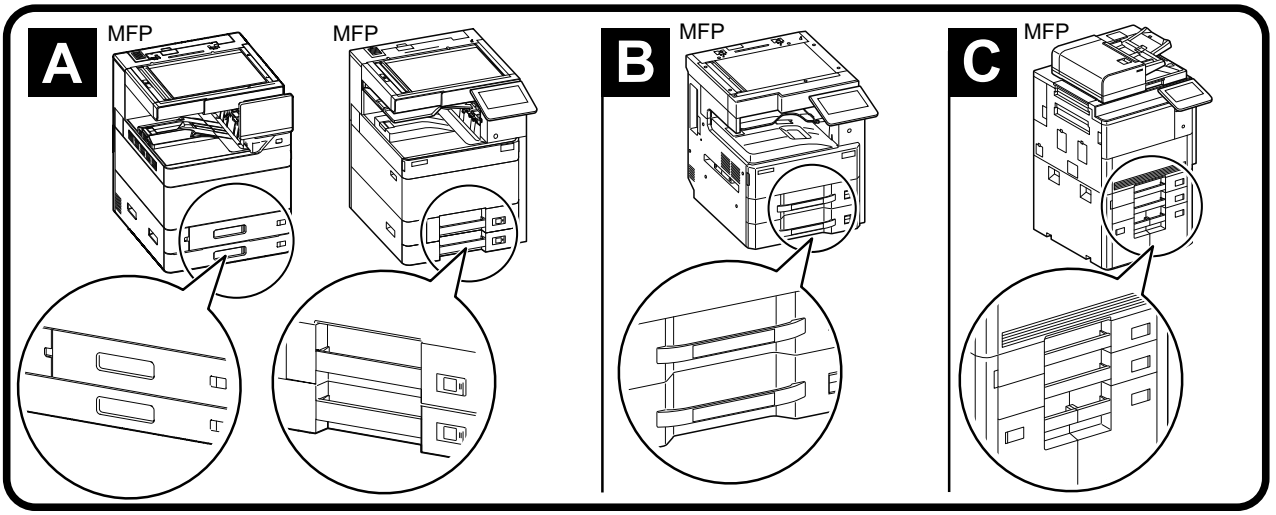

(EN)

A different procedure is required depending on the product which is installed with this unit.Each procedure is described in the following pages.
For installation with a MFP(A), see Page 1 to Page 4.
For installation with a MFP(B), see Page 5 to Page 8.
For installation with a MFP(C), see Page 9 to Page 12.

(FR)

Une procédure différente est requise selon le produit qui est installé avec cette unité.Chaque procédure est décrite dans les pages suivantes.
Pour l'installation avec une imprimante multifonction(A), voir Page 1 à Page 4.
Pour l'installation avec une imprimante multifonction(B), voir Page 5 à Page 8.
Pour l'installation avec une imprimante multifonction(C), voir Page 9 à Page 12.

(ES)

El procedimiento es diferente según el producto que se instale con esta unidad.En las siguientes páginas, se describe cada procedimiento.
Para la instalación con un MFP(A), consulte las páginas de la 1 a la 4.
Para la instalación con un MFP(B), consulte las páginas de la 5 a la 8.
Para la instalación con un MFP(C), consulte las páginas de la 9 a la 12.

(DE)

Je nach verwendetem Modell ist eine andere Vorgehensweise zur Installation dieses Teils erforderlich.Die unterschiedlichen Vorgehensweisen werden auf den folgenden Seiten erläutert.
Bei Installation an einem MFP(A) siehe Seiten 1 bis 4.
Bei Installation an einem MFP(B) siehe Seiten 5 bis 8.
Bei Installation an einem MFP(C) siehe Seiten 9 bis 12.

(IT)

Si richiede una procedura diversa in funzione del prodotto su cui è installata l'unità.Le singole procedure sono descritte nelle pagine seguenti.
Per l'installazione con un MFP(A), vedere le pagine da 1 a 4.
Per l'installazione con un MFP(B), vedere le pagine da 5 a 8.
Per l'installazione con un MFP(C), vedere le pagine da 9 a 12.

(ZHCN)

根据安装对象，安装步骤略有不同。各个步骤记载在下面的页面。
安装到 MFP(A) 上时，请参见 P1-P4。
安装到 MFP(B) 上时，请参见 P5-P8。
安装到 MFP(C) 上时，请参见 P9-P12。

(KO)

이 장치에 설치되는 제품에 따라 절차가 다릅니다 . 다음 페이지에서 각 절차를 설명합니다 .
MFP(A) 에 설치하는 경우 1 페이지 ~4 페이지를 참조하십시오 .
MFP(B) 에 설치하는 경우 5 페이지 ~8 페이지를 참조하십시오 .
MFP(C) 에 설치하는 경우 9 페이지 ~12 페이지를 참조하십시오 .

(JA)

装着する対象によって、取付手順は異なります。それぞれ、以下のページに記載しています。
MFP(A) に設置する場合;1 ページ～ 4 ページ
MFP(B) に設置する場合;5 ページ～ 8 ページ
MFP(C) に設置する場合;9 ページ～ 12 ページ

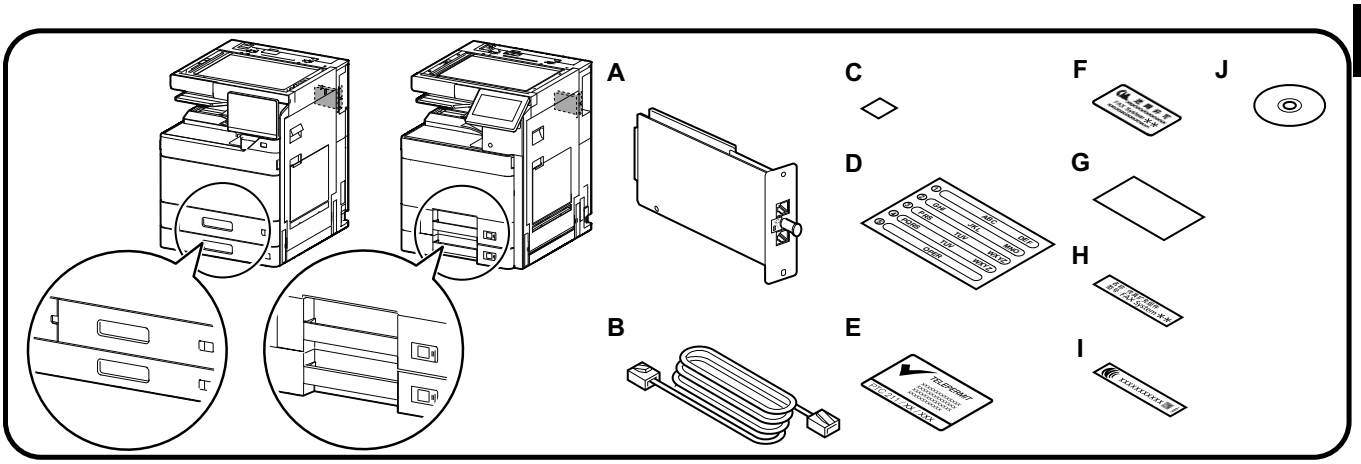

	100V	120V	230V	240V	110V	220V	220-240V
	Japan	North America/ Latin America	Europe	Australia/ New Zea-land	Taiwan	China	Asia/ Korea
A	1	1	1	1	1	1	1
B	1	1	-	1	-	1	-
C	1	1	1	1	1	1	1
D	-	1	1	1	1	1	1
E	-	-	-	1	-	-	-
F	-	-	-	-	-	1	-
G	-	-	-	-	-	1	-
H	-	-	-	-	-	1	-
I	-	-	-	-	1	-	-
J	-	-	-	-	-	1	-

A

① 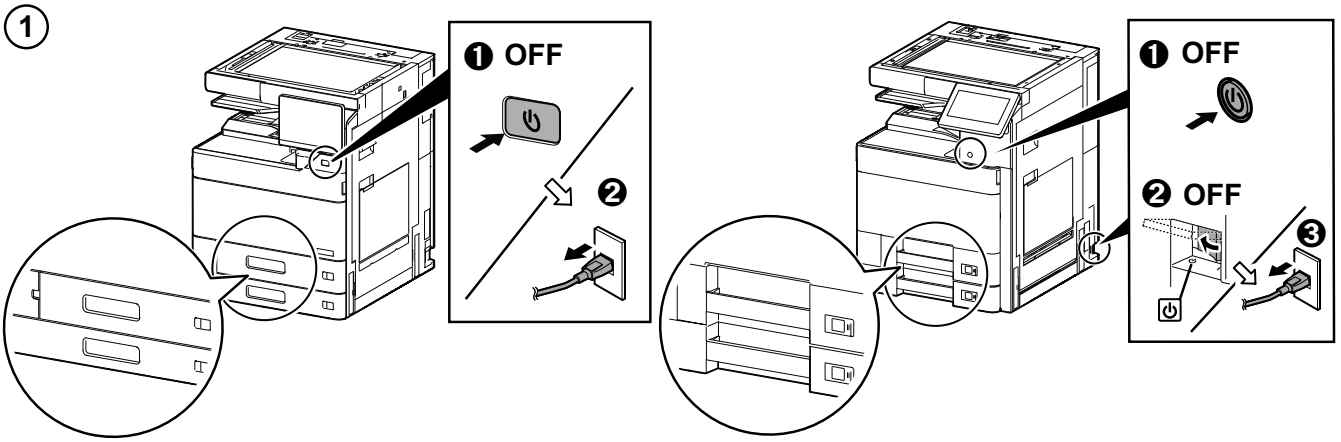

② 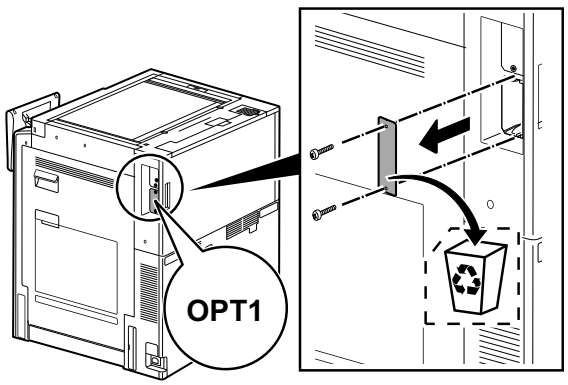

③ 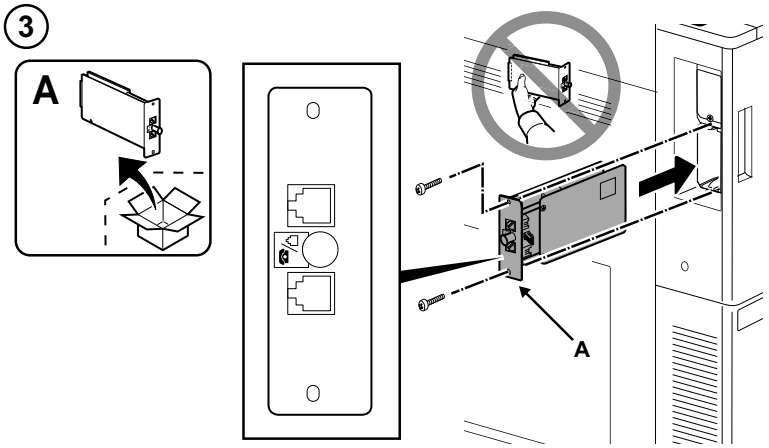

④

(EN) (Excluding New Zealand model)
(FR) (À l'exclusion du modèle Nouvelle-Zélande)
(ES) (Excluyendo el modelo de Nuevo Zelandés)
(DE) (Ausgenommen Neuseeland-Modell)
(IT) (Escluso il modello della Nuova Zelanda)
(ZHCN) (新西兰以外的型号)
(KO) (뉴질랜드 사양 이외)
(JA) （ニュージーランド仕様以外）

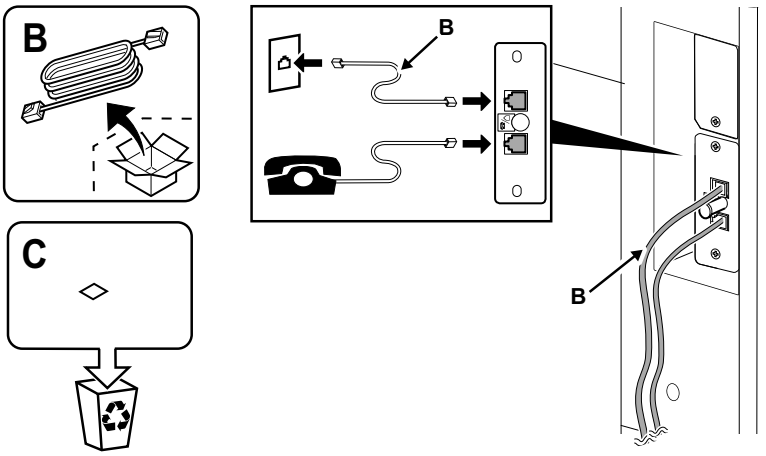

(EN) (For New Zealand model)
(FR) (Modèle pour la Nouvelle-Zélande)
(ES) (Para el modelo Nuevo Zelandés)
(DE) (Für Neuseeland-Modell)
(IT) (Per il modello Nuova Zelanda)
(ZHCN) (仅适用于新西兰型号)
(KO) (뉴질랜드 사양만)
(JA) （ニュージーランド仕様のみ）

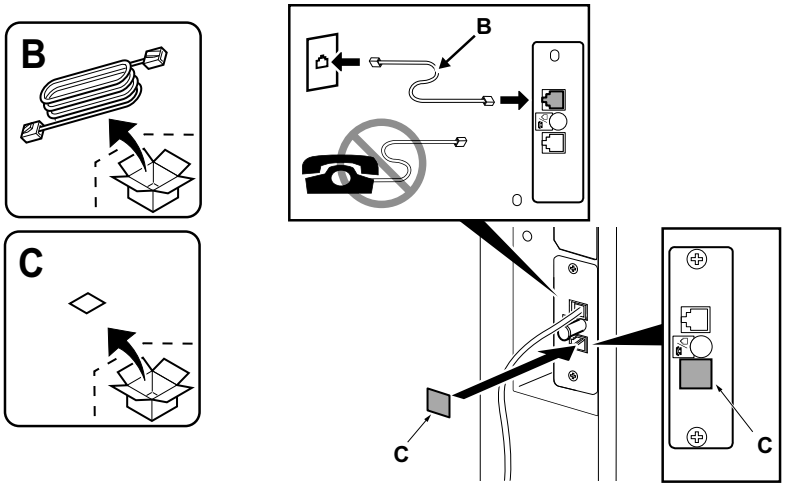

A

5

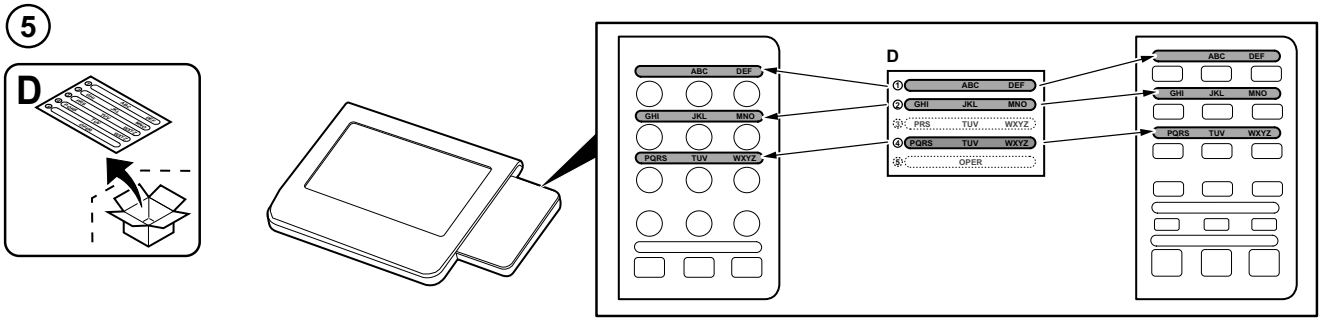

(EN) (Only when NK-7110/NK-7100/NK-7120/NK-7130 is installed) (Excluding 100 V/120 V models)

(FR) (Uniquement lors de l'installation de NK-7110/NK-7100/NK-7120/NK-7130) (Sauf sur les modèles 100 V/120 V)

(ES) (Solo si está instalada la unidad NK-7110/NK-7100/NK-7120/NK-7130) (A excepción de los modelos de 100 V/120 V)

(DE) (Nur wenn NK-7110/NK-7100/NK-7120/NK-7130 installiert ist) (Ausgenommen 100-V/120-V-Modelle)

(IT) (Solo quando è installato NK-7110/NK-7100/NK-7120/NK-7130) (Esclusi i modelli da 100 V/120 V)

(ZHCN) (当设置 NK-7110/NK-7100/NK-7120/NK-7130 时) (100V/120V 规格以外)

(KO) (NK-7110/NK-7100/NK-7120/NK-7130 이 설치된 경우만) (100V/120V사양 이외)

(JA) (NK-7110/NK-7100/NK-7120/NK-7130を設置している場合のみ)(１００V/１２０V仕様以外)

6

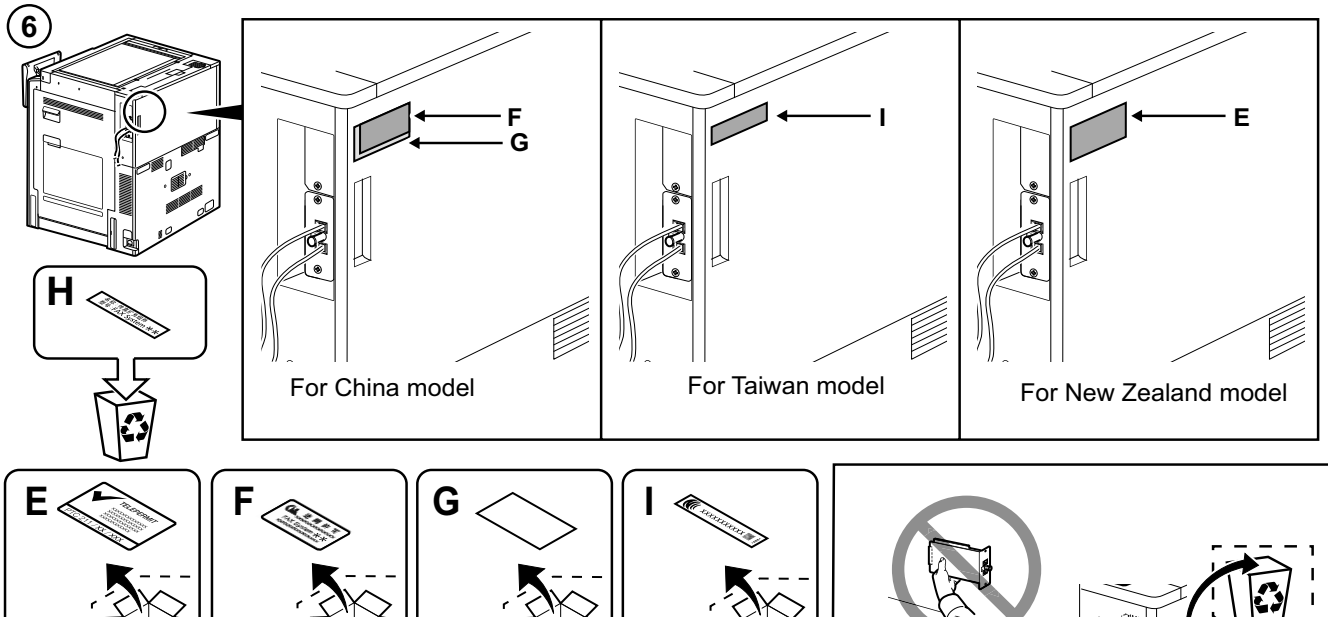

7

(EN) (When installing the Multiport)

(FR) (En cas d'installation de la deuxième ligne de fax)

(ES) (Al instalar la segunda línea de fax)

(DE) (Wenn Sie eine zweite Fax-Karte installieren)

(IT) (Quando si installa la seconda linea Fax)

(ZHCN) (安装了多功能端口)

(KO) (멀티포트를 설치하는 경우)

(JA) (マルチポートを設置する場合)

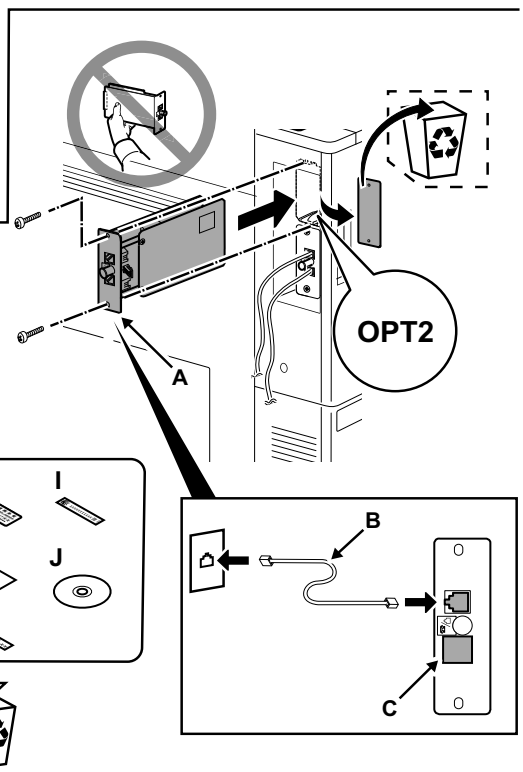

A ⑧

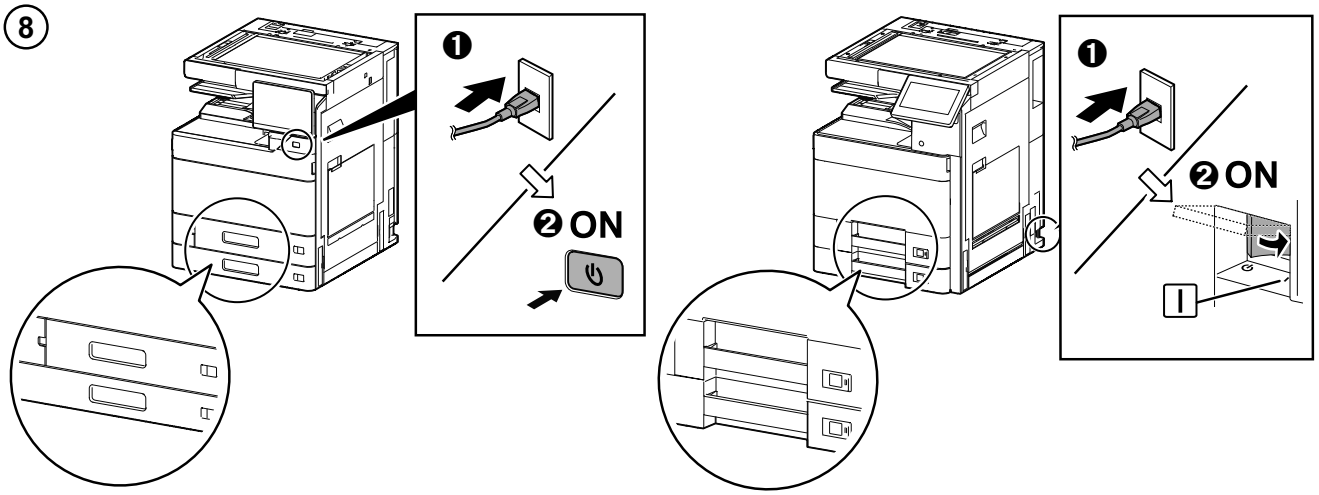

⑨

(EN)

Initialize the FAX circuit board.

1.If the FAX PWBs were installed simultaneously to OPT1 and OPT2 (all Fax PWBs are initialized), perform the maintenance mode U600 to ini-tialize the FAX PWBs.

2.If the FAX circuit board has been added to OPT2 (to initialize the FAX ircuit board in OPT2)
Initialize OPT2 by pressing [PORT2], and the [Start] key in this order in the maintenance mode U698 and executing the maintenance mode U600. If [ALL] is selected in U698, both OPT1 and OPT2 are initialized.
For details, see the service manual.

(FR)

Initialiser la carte à circuits FAX.

1.Si les cartes de circuit imprimé du fax ont été installées en même temps que OPT1 et OPT2 (toutes les cartes de circuit imprimé du fax sont initialisées), exécuter le mode maintenance U600 pour initialiser les cartes de circuit imprimé du fax.

2.Si la carte à circuits FAX a été ajoutée à l'OPT2 (pour initialiser la carte à circuits FAX dans l'OPT2)
Initialiser l'OPT2 en appuyant sur [PORT2] et la touche [Départ] dans cet ordre en mode de maintenance U698, et exécuter le mode de maintenance U600. Si [ALL] est sélectionné dans U698, l'OPT1 et l'OPT2de détails, se reporter au manuel d'entretien.

(ES)

Inicialice la tarjeta de circuitos FAX.

1.Si se instalaron FAX PWB simultáneamente a OPT1 y OPT2 (se ini-cializan todos los FAX PWB), ejecute el modo de mantenimiento U600 para inicializar los FAX PWB.

2.Si la tarjeta de circuitos de FAX se agregó a OPT2 (para inicializar la tarjeta de circuitos de FAX en OPT2)
Inicialice el OPT2 presionando [PORT2] y la tecla de [Inicio] en ese orden en el modo de mantenimiento U698 y ejecutando el modo de mantenimiento U600. Si se selecciona [ALL] en U698, se inicializan ambos OPT1 y OPT2.
Para más detalles, lea el manual de servicio.

(DE)

Initialisieren der FAX-Leiterplatte.

1.Falls die FAX-Karten gleichzeitig in OPT1 und OPT2 installiert werden (alle FAX-Karten werden initialisiert), führen Sie den Wartungsmodus U600 aus, um die FAX-Karten zu initialisieren.

2.Wenn die FAX-Leiterplatte zu OPT2 hinzugefügt worden ist (um die FAX-Leit-erplatte in OPT2 zu in7itialisieren)
OPT2 initialisieren. Dazu [PORT2] und die [Start]-Taste im Wartungsmodus U698 in dieser Reihenfolge drücken und den Wartungsmodus U600 ausführen. Wenn [ALL] in U698 gewählt wird, werden OPT1 und OPT2 initialisiert. Weitere Einzelheiten siehe Wartungsanleitung.

(IT)

Inizializzare la scheda a circuiti FAX.

1.Se sono state installate simultaneamente le schede FAX PWB su OPT1 e OPT2 (tutte le schede FAX PWB sono inizializzate), eseguire il modo manutenzione U600 per inizializzare le schede FAX PWB.

2.Se la scheda a circuiti è stata aggiunta all'OPT2 (per inzializzare la scheda a circuiti FAX nell'OPT2)
Inizializzare OPT2 premendo [PORT2] e il tasto [Avvio] in questo ordine nel modo di manutenzione U698 ed eseguendo il modo di manutenzione U600. Se viene selezionato [ALL] nel modo U698, entrambi OPT1 e OPT2 sono inizializzati. Per ulteriori dettagli leggere il manuale d'istruzioni.

(ZHCN)

传真电路板的初始化

1.当把传真电路板同时安装到 OPT1 和 OPT2 时（全部的传真电路板初始化），执行维修保养模式 U600，初始化传真电路板。

2.在 OPT2 上增设时
（OPT2 的传真电路板初始化）
只进行 OPT2 初始化时，在维修保养模式 U698 状态下，按顺序按下［PORT2］、［开始］键，执行维修保养模式 U600。在 U698 状态下设定［ALL］时，会使 OPT1 和 OPT2 均初始化。有关详细信息，请参见维修手册。

(KO)

FAX 회로기판의 초기화

1.OPT1 과 OPT2 에 FAX 회로기판을 동시에 설치한 경우 (모든 FAX 회로기판이 초기화됨), 메인터넌스 모드 U600 을 수행하여 FAX 회로기판을 초기화합니다 .

2.OPT2 에 증설한 경우 (OPT2 의 FAX 기판을 초기화)
메인터넌스모드 U698 에서 [PORT2], [시작]키 순으로 누릅니다 .
메인터넌스 모드 U600 을 실행하고 FAX 회로기판을 초기화합니다 .U698 에서 [ALL]을 설정하면 OPT1 과 OPT2 양쪽을 초기화하기 때문에 주의할 것 .
상세는 서비스 매뉴얼을 참조할 것 .

(JA)

FAX 基板の初期化

1. OPT1 と OPT2 に FAX 基板を同時に設置した場合（すべての FAX 基板を初期化）
メンテナンスモード U600 を実行し、FAX 基板を初期化する。

2. OPT2 に増設した場合（OPT2 の FAX 基板を初期化）
メンテナンスモード U698 で［PORT2］、［スタート］キーの順に押す。メンテナンスモード U600 を実行し、FAX 基板を初期化する。U698 で［ALL］を設定すると OPT1 と OPT2 両方を初期化するので注意すること。詳細はサービスマニュアルを参照のこと。

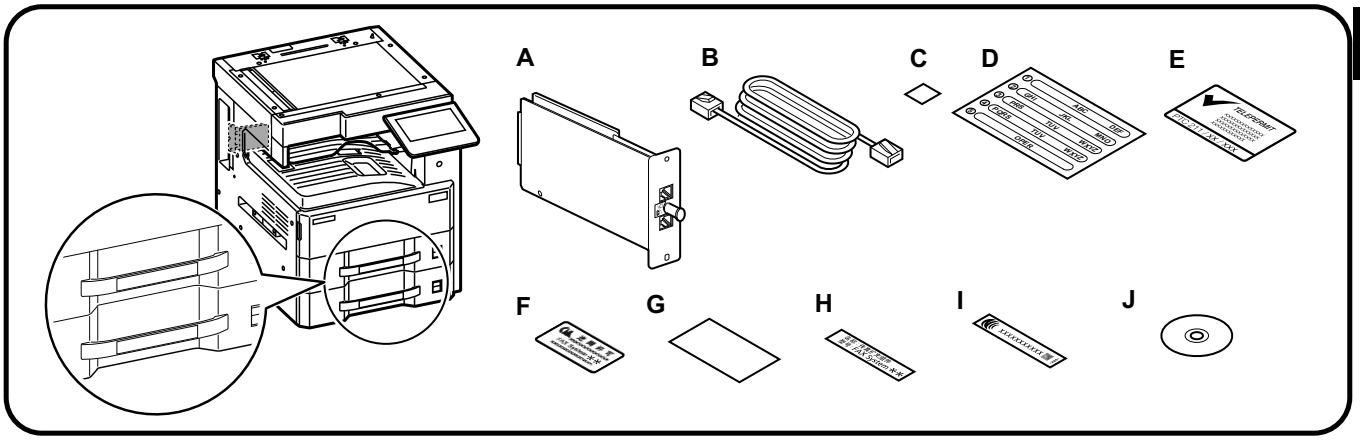

	100V	120V	230V	240V	110V	220V	220-240V
	Japan	North America/ Latin America	Europe	Australia/ New Zea-land	Taiwan	China	Asia/ Korea
A	1	1	1	1	1	1	1
B	1	1	-	1	-	1	-
C	1	1	1	1	1	1	1
D	-	1	1	1	1	1	1
E	-	-	-	1	-	-	-
F	-	-	-	-	-	1	-
G	-	-	-	-	-	1	-
H	-	-	-	-	-	1	-
I	-	-	-	-	1	-	-
J	-	-	-	-	-	1	-

B

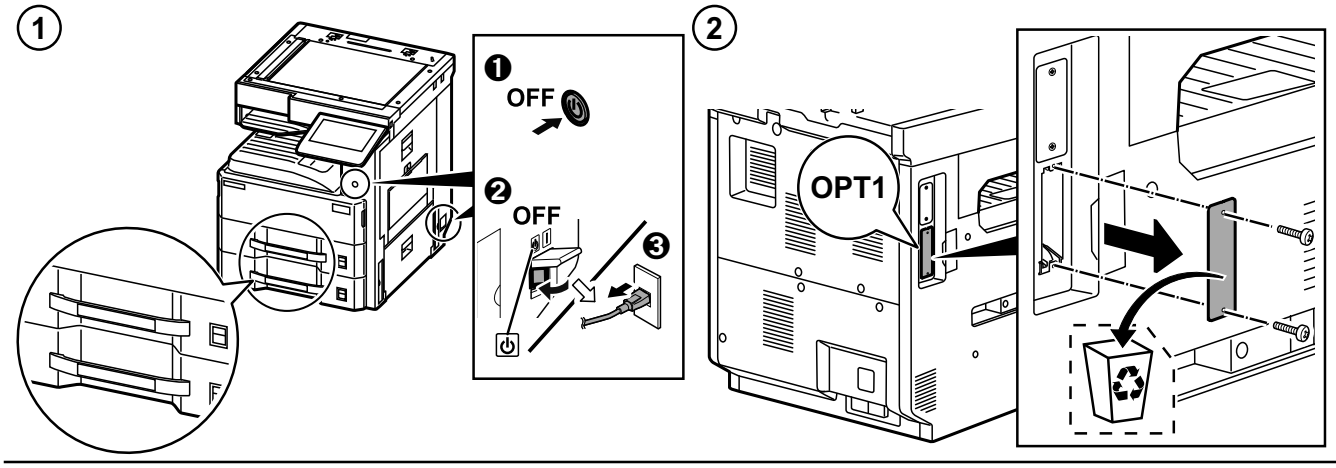

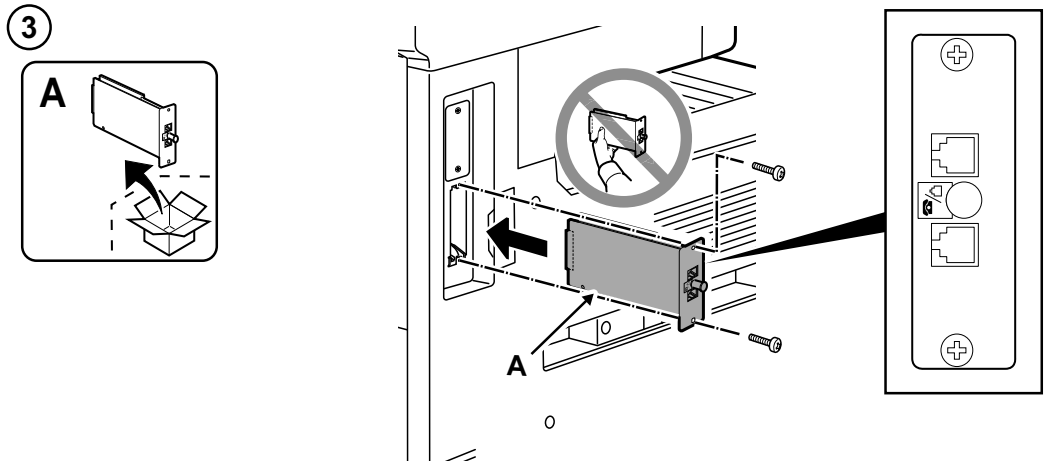

4

(EN) (Excluding New Zealand model)
(FR) (À l'exclusion du modèle Nouvelle-Zélande)
(ES) (Excluyendo el modelo de Nuevo Zelandés)
(DE) (Ausgenommen Neuseeland-Modell)
(IT) (Escluso il modello della Nuova Zelanda)
(ZHCN)（新西兰以外的型号）
(KO) (뉴질랜드 사양 이외)
(JA) （ニュージーランド仕様以外）

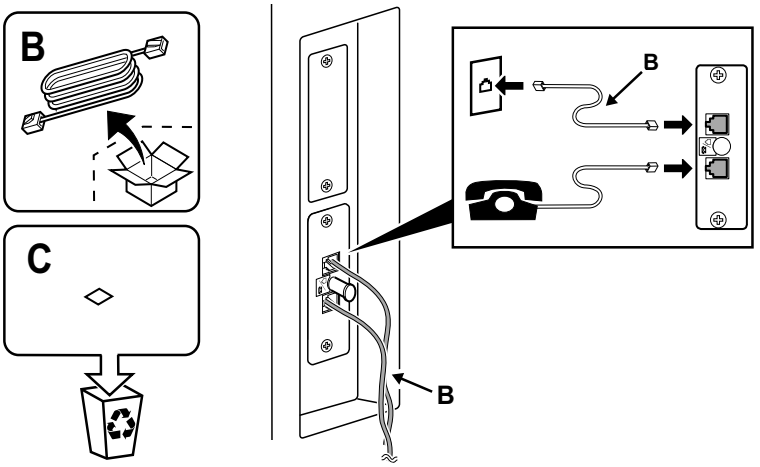

(EN) (For New Zealand model)
(FR) (Modèle pour la Nouvelle-Zélande)
(ES) (Para el modelo Nuevo Zelandés)
(DE) (Für Neuseeland-Modell)
(IT) (Per il modello Nuova Zelanda)
(ZHCN)（仅适用于新西兰型号）
(KO) (뉴질랜드 사양만)
(JA) （ニュージーランド仕様のみ）

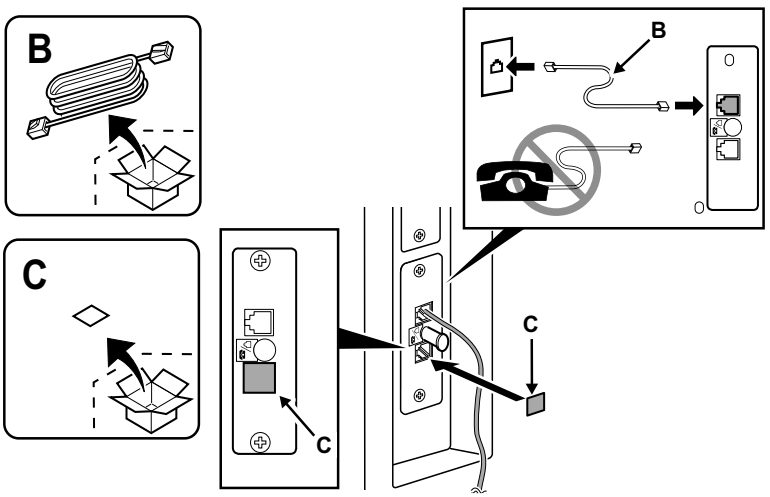

B

⑤

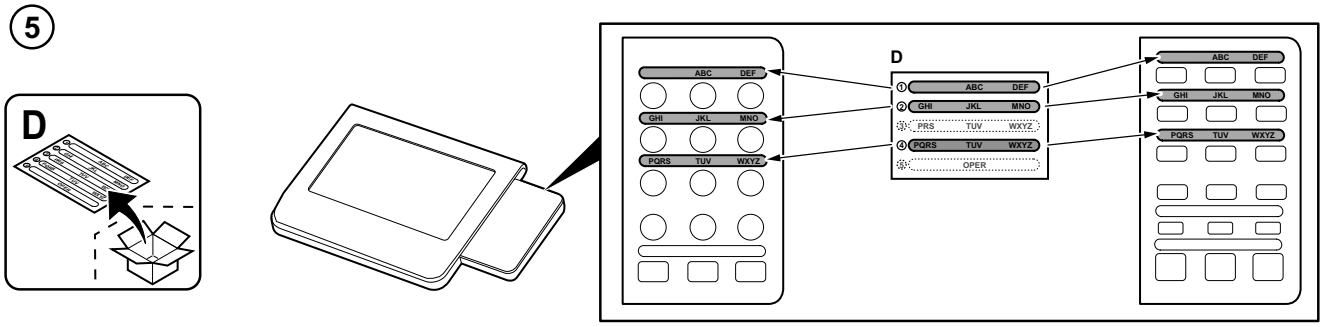

(EN) (Only when NK-7110/NK-7100/NK-7120/NK-7130 is installed) (Excluding 100 V/120 V models)

(FR) (Uniquement lors de l'installation de NK-7110/NK-7100/NK-7120/NK-7130) (Sauf sur les modèles 100 V/120 V)

(ES) (Solo si está instalada la unidad NK-7110/NK-7100/NK-7120/NK-7130) (A excepción de los modelos de 100 V/120 V)

(DE) (Nur wenn NK-7110/NK-7100/NK-7120/NK-7130 installiert ist) (Ausgenommen 100-V/120-V-Modelle)

(IT) (Solo quando è installato NK-7110/NK-7100/NK-7120/NK-7130) (Esclusi i modelli da 100 V/120 V)

(ZHCN) (当设置 NK-7110/NK-7100/NK-7120/NK-7130 时) (100V/120V 规格以外)

(KO) (NK-7110/NK-7100/NK-7120/NK-7130 이 설치된 경우만) (100V/120V사양 이외)

(JA) (NK-7110/NK-7100/NK-7120/NK-7130を設置している場合のみ)(１００V/１２０V仕様以外)

⑥

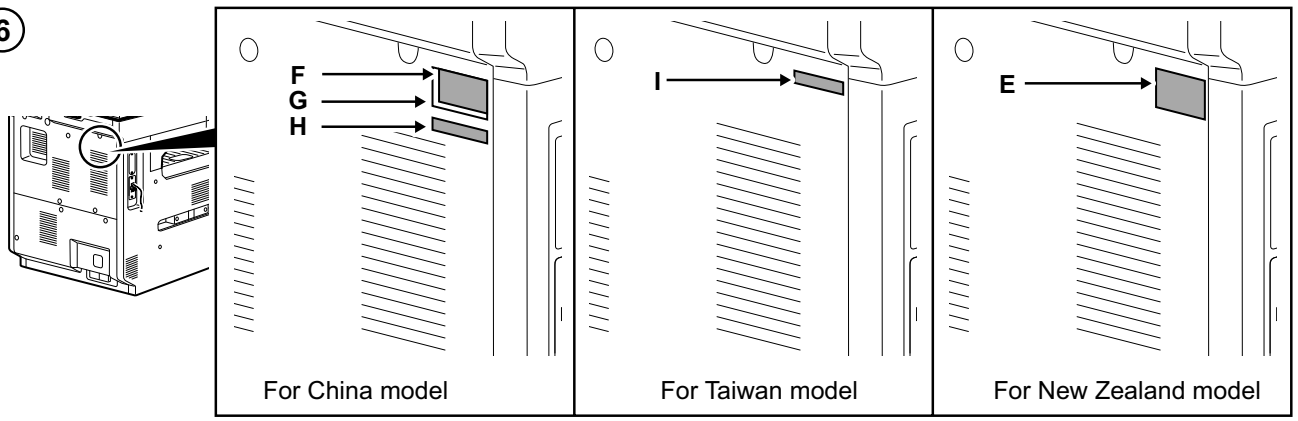

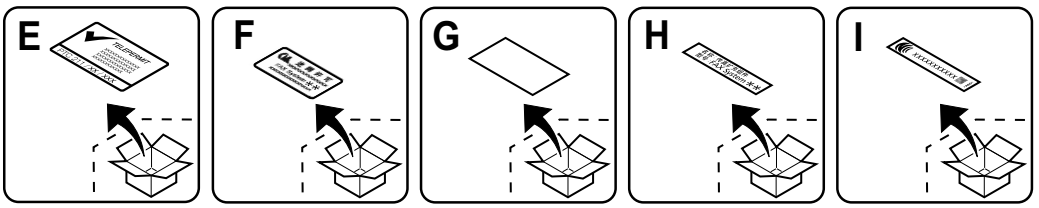

⑦

(EN) (When installing the Multiport)

(FR) (En cas d'installation de la deuxième ligne de fax)

(ES) (Al instalar la segunda línea de fax)

(DE) (Wenn Sie eine zweite Fax-Karte installieren)

(IT) (Quando si installa la seconda linea Fax)

(ZHCN) (安装了多功能端口)

(KO) (멀티포트를 설치하는 경우)

(JA) (マルチポートを設置する場合)

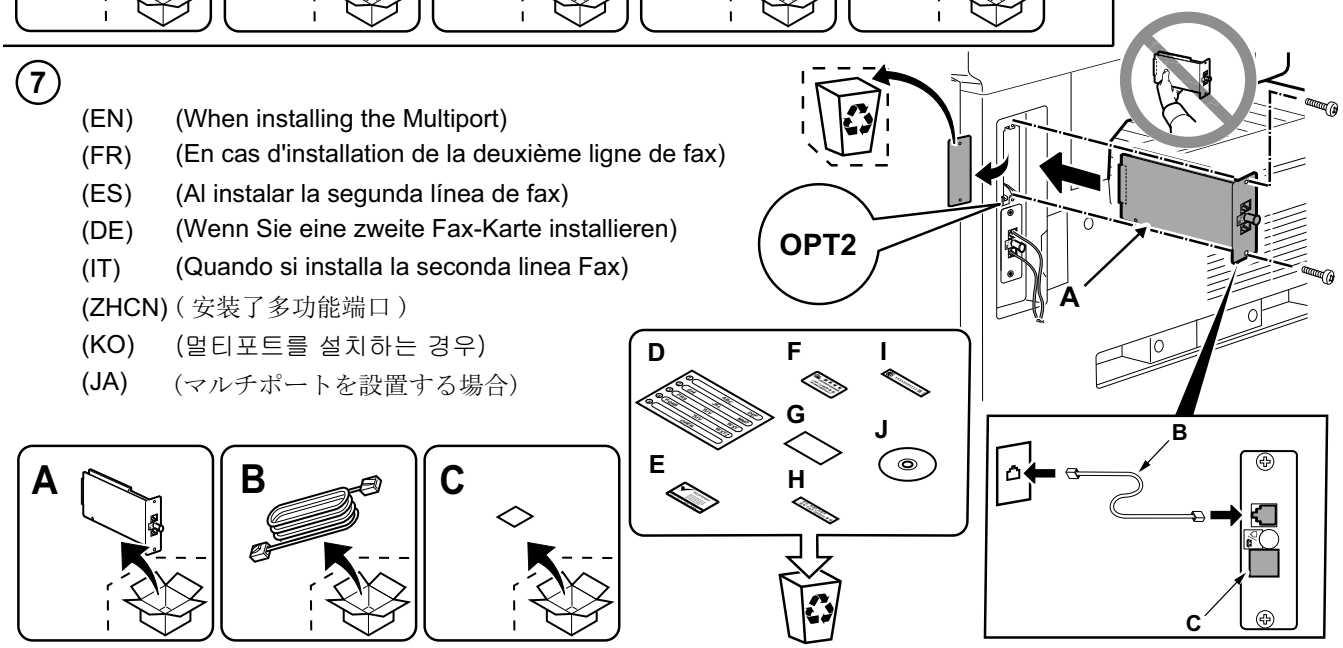

B

⑧

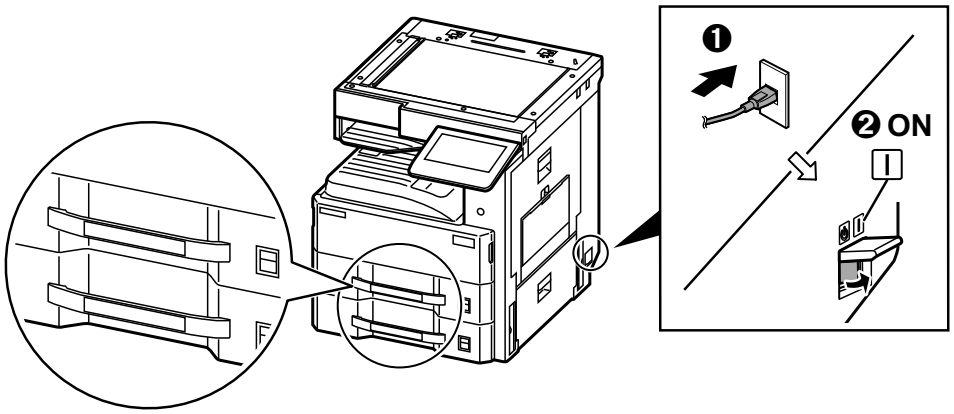

⑨

(EN)

Initialize the FAX circuit board.

1.If the FAX PWBs were installed simultaneously to OPT1 and OPT2 (all Fax PWBs are initialized), perform the maintenance mode U600 to ini-tialize the FAX PWBs.

2.If the FAX circuit board has been added to OPT2 (to initialize the FAX ircuit board in OPT2)
Initialize OPT2 by pressing [PORT2], and the [Start] key in this order in the maintenance mode U698 and executing the maintenance mode U600. If [ALL] is selected in U698, both OPT1 and OPT2 are initialized.
For details, see the service manual.

(FR)

Initialiser la carte à circuits FAX.

1.Si les cartes de circuit imprimé du fax ont été installées en même temps que OPT1 et OPT2 (toutes les cartes de circuit imprimé du fax sont initialisées), exécuter le mode maintenance U600 pour initialiser les cartes de circuit imprimé du fax.

2.Si la carte à circuits FAX a été ajoutée à l'OPT2 (pour initialiser la carte à circuits FAX dans l'OPT2)
Initialiser l'OPT2 en appuyant sur [PORT2] et la touche [Départ] dans cet ordre en mode de maintenance U698, et exécuter le mode de maintenance U600. Si [ALL] est sélectionné dans U698, l'OPT1 et l'OPT2de détails, se reporter au manuel d'entretien.

(ES)

Inicialice la tarjeta de circuitos FAX.

1.Si se instalaron FAX PWB simultáneamente a OPT1 y OPT2 (se ini-cializan todos los FAX PWB), ejecute el modo de mantenimiento U600 para inicializar los FAX PWB.

2.Si la tarjeta de circuitos de FAX se agregó a OPT2 (para inicializar la tarjeta de circuitos de FAX en OPT2)
Inicialice el OPT2 presionando [PORT2] y la tecla de [Inicio] en ese orden en el modo de mantenimiento U698 y ejecutando el modo de mantenimiento U600. Si se selecciona [ALL] en U698, se inicializan ambos OPT1 y OPT2.
Para más detalles, lea el manual de servicio.

(DE)

Initialisieren der FAX-Leiterplatte.

1.Falls die FAX-Karten gleichzeitig in OPT1 und OPT2 installiert werden (alle FAX-Karten werden initialisiert), führen Sie den Wartungsmodus U600 aus, um die FAX-Karten zu initialisieren.

2.Wenn die FAX-Leiterplatte zu OPT2 hinzugefügt worden ist (um die FAX-Leit-erplatte in OPT2 zu in7itialisieren)
OPT2 initialisieren. Dazu [PORT2] und die [Start]-Taste im Wartungsmodus U698 in dieser Reihenfolge drücken und den Wartungsmodus U600 ausführen. Wenn [ALL] in U698 gewählt wird, werden OPT1 und OPT2 initialisiert. Weitere Einzelheiten siehe Wartungsanleitung.

(IT)

Inizializzare la scheda a circuiti FAX.

1.Se sono state installate simultaneamente le schede FAX PWB su OPT1 e OPT2 (tutte le schede FAX PWB sono inizializzate), eseguire il modo manutenzione U600 per inizializzare le schede FAX PWB.

2.Se la scheda a circuiti è stata aggiunta all'OPT2 (per inzializzare la scheda a circuiti FAX nell'OPT2)
Inizializzare OPT2 premendo [PORT2] e il tasto [Avvio] in questo ordine nel modo di manutenzione U698 ed eseguendo il modo di manutenzione U600. Se viene selezionato [ALL] nel modo U698, entrambi OPT1 e OPT2 sono inizializzati. Per ulteriori dettagli leggere il manuale d'istruzioni.

(ZHCN)

传真电路板的初始化

1.当把传真电路板同时安装到 OPT1 和 OPT2 时（全部的传真电路板初始化），执行维修保养模式 U600，初始化传真电路板。

2.在 OPT2 上增设时
(OPT2 的传真电路板初始化)
只进行 OPT2 初始化时，在维修保养模式 U698 状态下，按顺序按下 [PORT2]、[开始]键，执行维修保养模式 U600。在 U698 状态下设定 [ALL]时，会使 OPT1 和 OPT2 均初始化。有关详细信息，请参见维修手册。

(KO)

FAX 회로기판의 초기화

1.OPT1 과 OPT2 에 FAX 회로기판을 동시에 설치한 경우 (모든 FAX 회로기판이 초기화됨), 메인터넌스 모드 U600 을 수행하여 FAX 회로기판을 초기화합니다 .

2.OPT2 에 증설한 경우 (OPT2 의 FAX 기판을 초기화)
메인터넌스모드 U698 에서 [PORT2], [시작]키 순으로 누릅니다 .
메인터넌스 모드 U600 을 실행하고 FAX 회로기판을 초기화합니다 .U698 에서 [ALL]을 설정하면 OPT1 과 OPT2 양쪽을 초기화하기 때문에 주의할 것 .
상세는 서비스 매뉴얼을 참조할 것 .

(JA)

FAX 基板の初期化

1. OPT1 と OPT2 に FAX 基板を同時に設置した場合 (すべての FAX 基板を初期化)
メンテナンスモード U600 を実行し、FAX 基板を初期化する。

2. OPT2 に増設した場合 (OPT2 の FAX 基板を初期化)
メンテナンスモード U698 で [PORT2] 、[スタート]キーの順に押す。メンテナンスモード U600 を実行し、FAX 基板を初期化する。U698 で [ALL] を設定すると OPT1 と OPT2 両方を初期化するので注意すること。詳細はサービスマニュアルを参照のこと。

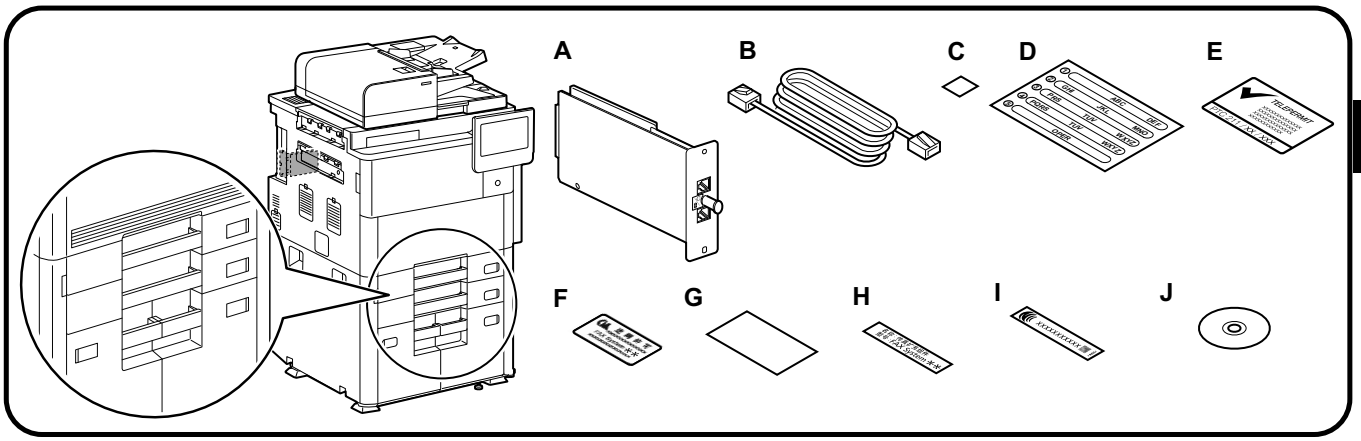

	100V	120V	230V	240V	110V	220V	220-240V
	Japan	North America/ Latin America	Europe	Australia/ New Zea-land	Taiwan	China	Asia/ Korea
A	1	1	1	1	1	1	1
B	1	1	-	1	-	1	-
C	1	1	1	1	1	1	1
D	-	1	1	1	1	1	1
E	-	-	-	1	-	-	-
F	-	-	-	-	-	1	-
G	-	-	-	-	-	1	-
H	-	-	-	-	-	1	-
I	-	-	-	-	1	-	-
J	-	-	-	-	-	1	-

C

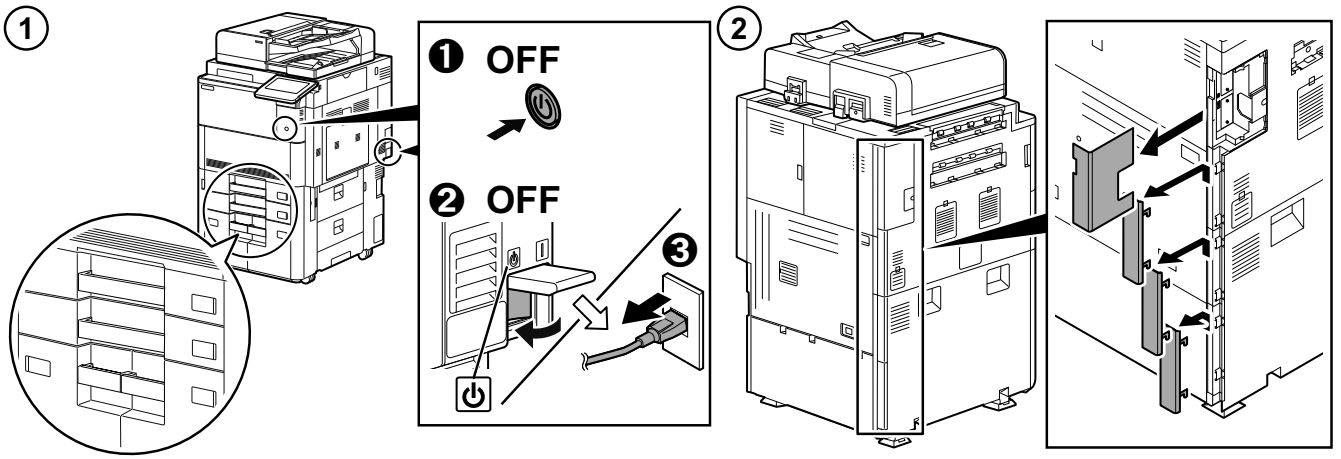

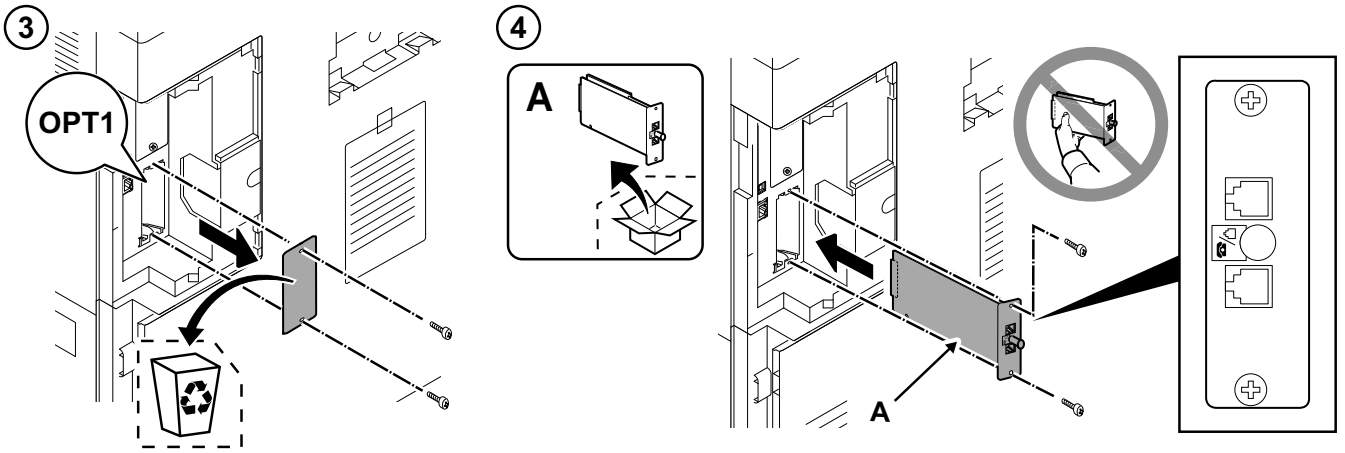

5

(EN) (Excluding New Zealand model)
(FR) (À l'exclusion du modèle Nouvelle-Zélande)
(ES) (Excluyendo el modelo de Nuevo Zelandés)
(DE) (Ausgenommen Neuseeland-Modell)
(IT) (Escluso il modello della Nuova Zelanda)
(ZHCN)（新西兰以外的型号）
(KO) (뉴질랜드 사양 이외)
(JA) （ニュージーランド仕様以外）

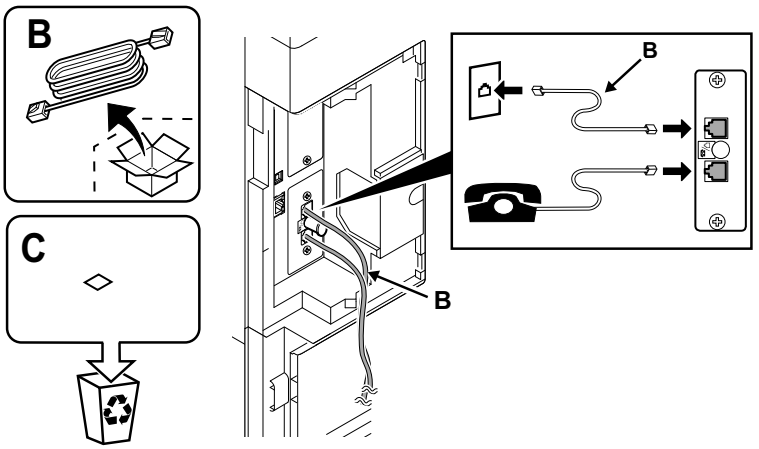

(EN) (For New Zealand model)
(FR) (Modèle pour la Nouvelle-Zélande)
(ES) (Para el modelo Nuevo Zelandés)
(DE) (Für Neuseeland-Modell)
(IT) (Per il modello Nuova Zelanda)
(ZHCN)（仅适用于新西兰型号）
(KO) (뉴질랜드 사양만)
(JA) （ニュージーランド仕様のみ）

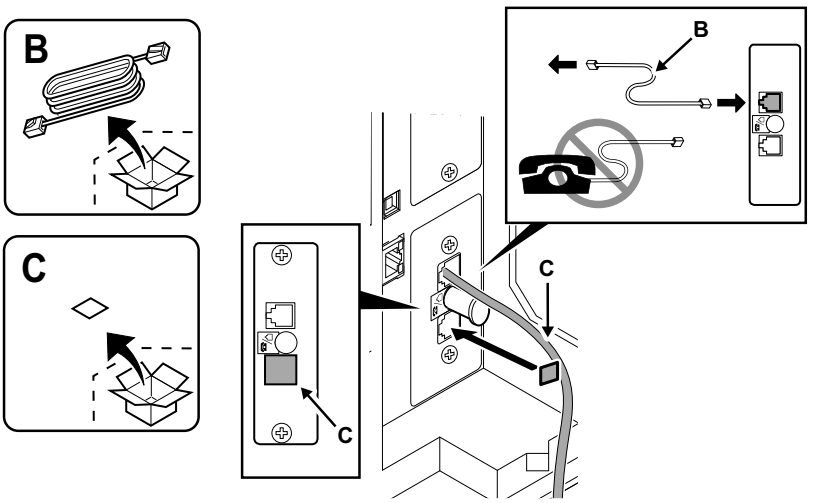

C

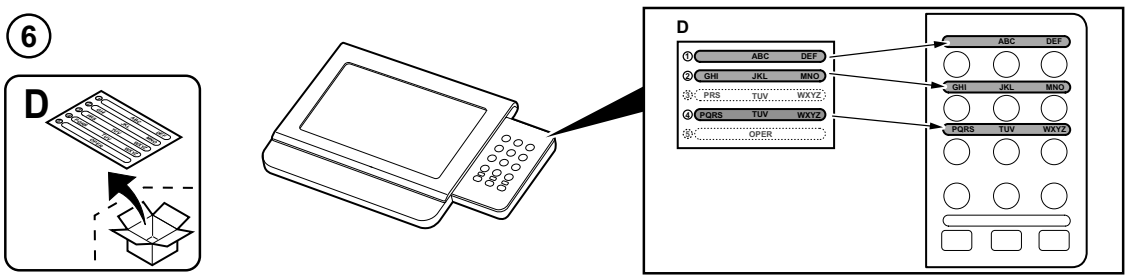

(EN) (Only when NK-7110/NK-7100 is installed) (Excluding 100 V/120 V models)

(FR) (Uniquement lors de l'installation de NK-7110/NK-7100) (Sauf sur les modèles 100 V/120 V)

(ES) (Solo si está instalada la unidad NK-7110/NK-7100) (A excepción de los modelos de 100 V/120V)

(DE) (Nur wenn NK-7110/NK-7100 installiert ist) (Ausgenommen 100-V/120-V-Modelle)

(IT) (Solo quando è installato NK-7110/NK-7100) (Esclusi i modelli da 100 V/120 V)

(ZHCN) (当设置 NK-7110/NK-7100 时) (100V/120V 规格以外)

(KO) (NK-7110/NK-7100 이 설치된 경우만) (100V/120V사양 이외)

(JA) (NK-7110/NK-7100を設置している場合のみ)(１００V/１２０V仕様以外)

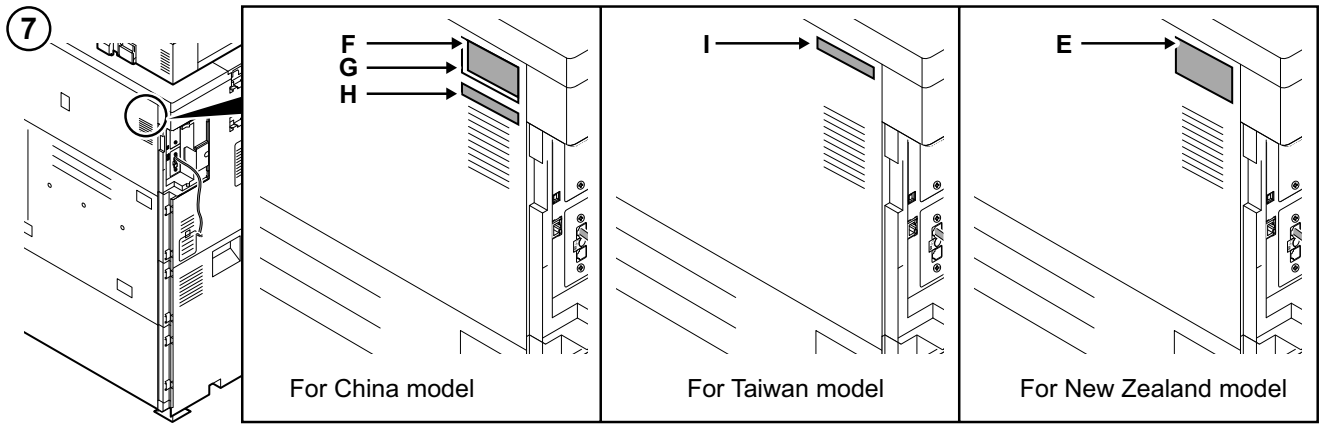

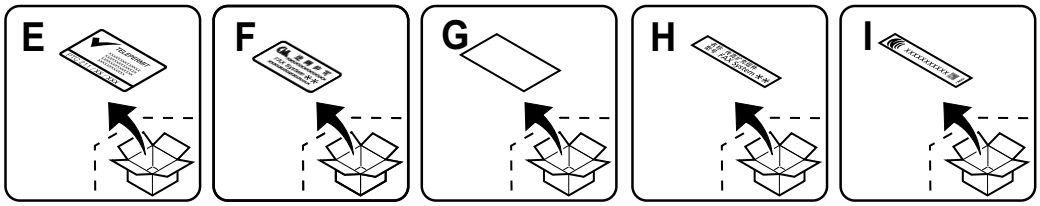

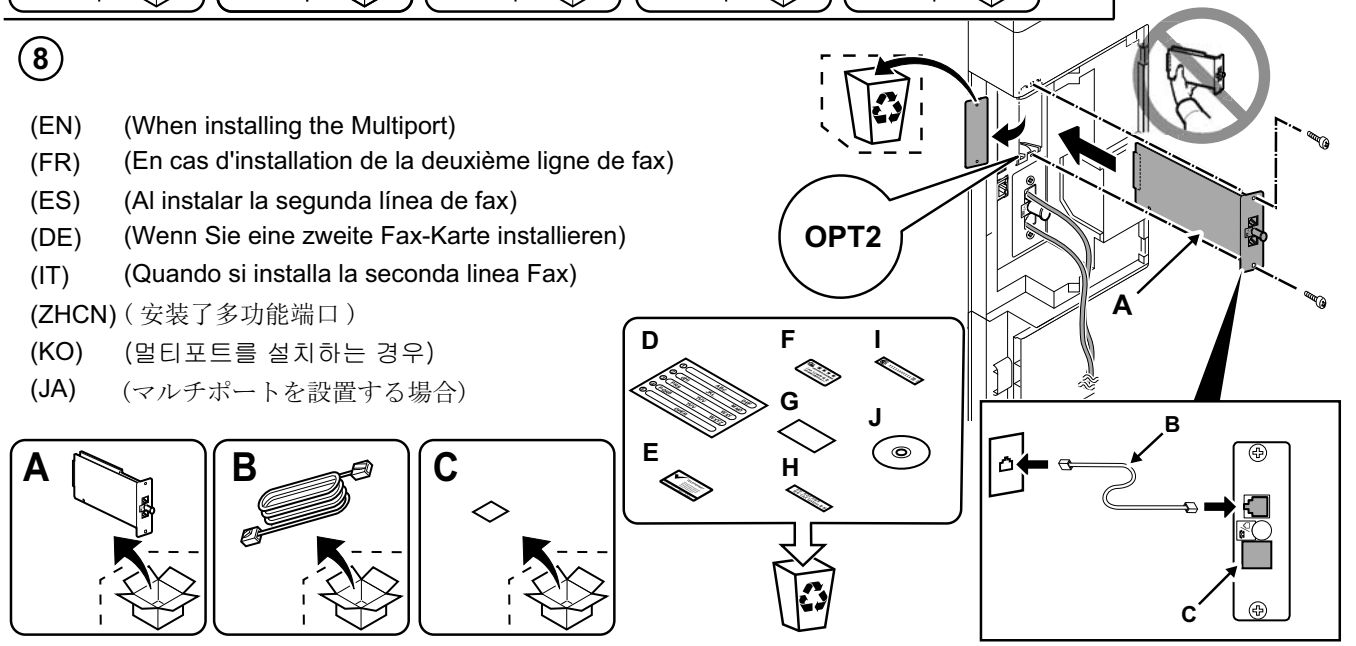

(EN) (When installing the Multiport)

(FR) (En cas d'installation de la deuxième ligne de fax)

(ES) (Al instalar la segunda línea de fax)

(DE) (Wenn Sie eine zweite Fax-Karte installieren)

(IT) (Quando si installa la seconda linea Fax)

(ZHCN) (安装了多功能端口)

(KO) (멀티포트를 설치하는 경우)

(JA) (マルチポートを設置する場合)

C

⑨

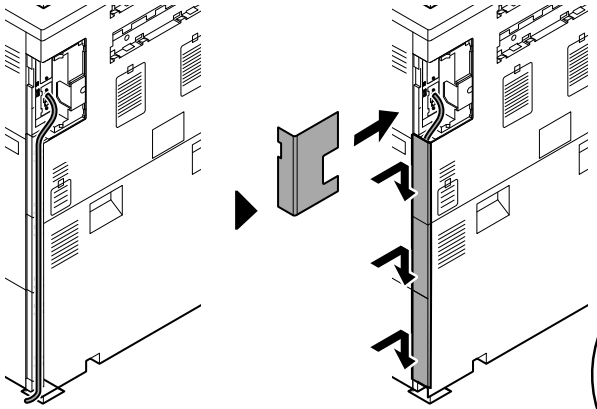

⑩

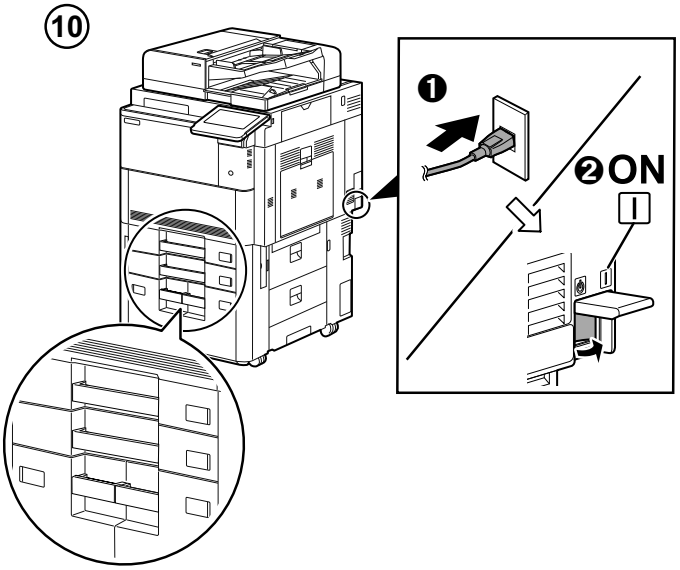

⑪

(EN)

Initialize the FAX circuit board.

1.If the FAX PWBs were installed simultaneously to OPT1 and OPT2 (all Fax PWBs are initialized), perform the maintenance mode U600 to ini-tialize the FAX PWBs.

2.If the FAX circuit board has been added to OPT2 (to initialize the FAX ircuit board in OPT2)
Initialize OPT2 by pressing [PORT2], and the [Start] key in this order in the maintenance mode U698 and executing the maintenance mode U600. If [ALL] is selected in U698, both OPT1 and OPT2 are initialized.
For details, see the service manual.

(FR)

Initialiser la carte à circuits FAX.

1.Si les cartes de circuit imprimé du fax ont été installées en même temps que OPT1 et OPT2 (toutes les cartes de circuit imprimé du fax sont initialisées), exécuter le mode maintenance U600 pour initialiser les cartes de circuit imprimé du fax.

2.Si la carte à circuits FAX a été ajoutée à l'OPT2 (pour initialiser la carte à circuits FAX dans l'OPT2)
Initialiser l'OPT2 en appuyant sur [PORT2] et la touche [Départ] dans cet ordre en mode de maintenance U698, et exécuter le mode de maintenance U600. Si [ALL] est sélectionné dans U698, l'OPT1 et l'OPT2de détails, se reporter au manuel d'entretien.

(ES)

Inicialice la tarjeta de circuitos FAX.

1.Si se instalaron FAX PWB simultáneamente a OPT1 y OPT2 (se ini-cializan todos los FAX PWB), ejecute el modo de mantenimiento U600 para inicializar los FAX PWB.

2.Si la tarjeta de circuitos de FAX se agregó a OPT2 (para inicializar la tarjeta de circuitos de FAX en OPT2)
Inicialice el OPT2 presionando [PORT2] y la tecla de [Inicio] en ese orden en el modo de mantenimiento U698 y ejecutando el modo de mantenimiento U600. Si se selecciona [ALL] en U698, se inicializan ambos OPT1 y OPT2.
Para más detalles, lea el manual de servicio.

(DE)

Initialisieren der FAX-Leiterplatte.

1.Falls die FAX-Karten gleichzeitig in OPT1 und OPT2 installiert werden (alle FAX-Karten werden initialisiert), führen Sie den Wartungsmodus U600 aus, um die FAX-Karten zu initialisieren.

2.Wenn die FAX-Leiterplatte zu OPT2 hinzugefügt worden ist (um die FAX-Leit-erplatte in OPT2 zu in7itialisieren)
OPT2 initialisieren. Dazu [PORT2] und die [Start]-Taste im Wartungsmodus U698 in dieser Reihenfolge drücken und den Wartungsmodus U600 ausführen. Wenn [ALL] in U698 gewählt wird, werden OPT1 und OPT2 initialisiert. Weitere Einzelheiten siehe Wartungsanleitung.

(IT)

Inizializzare la scheda a circuiti FAX.

1.Se sono state installate simultaneamente le schede FAX PWB su OPT1 e OPT2 (tutte le schede FAX PWB sono inizializzate), eseguire il modo manutenzione U600 per inizializzare le schede FAX PWB.

2.Se la scheda a circuiti è stata aggiunta all'OPT2 (per inzializzare la scheda a circuiti FAX nell'OPT2)
Inizializzare OPT2 premendo [PORT2] e il tasto [Avvio] in questo ordine nel modo di manutenzione U698 ed eseguendo il modo di manutenzione U600. Se viene selezionato [ALL] nel modo U698, entrambi OPT1 e OPT2 sono inizializzati. Per ulteriori dettagli leggere il manuale d'istruzioni.

(ZHCN)

传真电路板的初始化

1.当把传真电路板同时安装到 OPT1 和 OPT2 时（全部的传真电路板初始化），执行维修保养模式 U600，初始化传真电路板。

2.在 OPT2 上增设时
(OPT2 的传真电路板初始化)
只进行 OPT2 初始化时，在维修保养模式 U698 状态下，按顺序按下［PORT2］、[开始]键，执行维修保养模式 U600。在 U698 状态下设定［ALL]时，会使 OPT1 和 OPT2 均初始化。有关详细信息，请参见维修手册。

(KO)

FAX 회로기판의 초기화

1.OPT1 과 OPT2 에 FAX 회로기판을 동시에 설치한 경우 (모든 FAX 회로기판이 초기화됨), 메인터넌스 모드 U600 을 수행하여 FAX 회로기판을 초기화합니다 .

2.OPT2 에 증설한 경우 (OPT2 의 FAX 기판을 초기화)
메인터넌스모드 U698 에서 [PORT2], [시작]키 순으로 누릅니다 .
메인터넌스 모드 U600 을 실행하고 FAX 회로기판을 초기화합니다 .U698 에서 [ALL]을 설정하면 OPT1 과 OPT2 양쪽을 초기화하기 때문에 주의할 것 .
상세는 서비스 매뉴얼을 참조할 것 .

(JA)

FAX 基板の初期化

1. OPT1 と OPT2 に FAX 基板を同時に設置した場合（すべての FAX 基板を初期化）
メンテナンスモード U600 を実行し、FAX 基板を初期化する。

2. OPT2 に増設した場合 (OPT2 の FAX 基板を初期化)
メンテナンスモード U698 で［PORT2］、［スタート]キーの順に押す。メンテナンスモード U600 を実行し、FAX 基板を初期化する。U698 で［ALL］を設定すると OPT1 と OPT2 両方を初期化するので注意すること。詳細はサービスマニュアルを参照のこと。



2020. 9
303RK5671202

IS-7100



INSTALLATION GUIDE

GUIDE D'INSTALLATION

GUÍA DE INSTALACION

INSTALLATIONSANLEITUNG

GUIDA ALL'INSTALLAZIONE

安装手册

설치안내서

設置手順書

(EN) The flow of the installation. (DE) Montageablauf. (KO) 설치 순서
(FR) Déroulement de l’ installation. (IT) Procedura di installazione. (JA) 設置の流れ
(ES) Procedimiento de instalación. (ZHCN) 安装流程

1 Main Unit



2 IS-7100



3 IS-7100
DF-7140/DF-7150

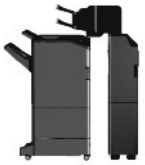

4 IS-7100
DF-7140/DF-7150
Main Unit



(EN) Be sure to remove any tapes and/or cushioning materials from the parts supplied.
(FR) Veillez à retirer les morceaux de bande adhésive et/ou les matériaux de rembourrage des pièces fournies.
(ES) Asegúrese de quitar todas las cintas y/o material amortiguador de las partes suministradas.
(DE) Stellen Sie sicher, dass sämtliche Klebebänder und/oder Polstermaterial von den gelieferten Teilen entfernt wurden.
(IT) Rimuovere tutti i nastri adesivi e/o i materiali di protezione dalle parti fornite.
(ZHCN) 如果附属品上带有固定胶带，缓冲材料时，请务必揭下。
(KO) 동봉품에 고정 테이프 , 완충재가 붙어 있는 경우에는 반드시 제거하십시오.
(JA) 同梱品に固定テープ、緩衝材がついている場合は、必ず取り外すこと。

(EN) The following items are necessary for installing IS-7100.
AK-7110, DF-7140/DF-7150
(FR) Les éléments suivants sont nécessaires pour l'installation de IS-7100.
AK-7110, DF-7140/DF-7150
(ES) Se necesitan los siguientes elementos para instalar IS-7100.
AK-7110, DF-7140/DF-7150
(DE) Die folgenden Gegenstände sind für die Installation des IS-7100 erforderlich.
AK-7110, DF-7140/DF-7150
(IT) Per l’ installazione di IS-7100 sono richiesti i seguenti elementi.
AK-7110, DF-7140/DF-7150
(ZHCN) 以下选购件是安装 IS-7100 所必需的。
AK-7110, DF-7140/DF-7150
(KO) IS-7100을 설치하려면 다음의 옵션 장치가 필요합니다.
AK-7110，DF-7140/DF-7150
(JA) IS-7100 を設置するには、以下のオプションが必要です。
AK-7110、DF-7140/DF-7150

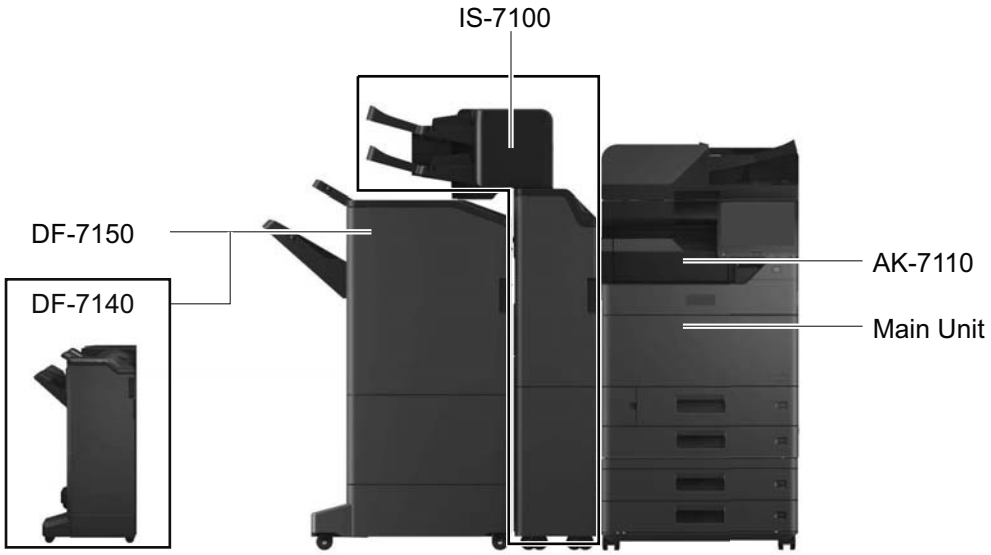

IS-7100

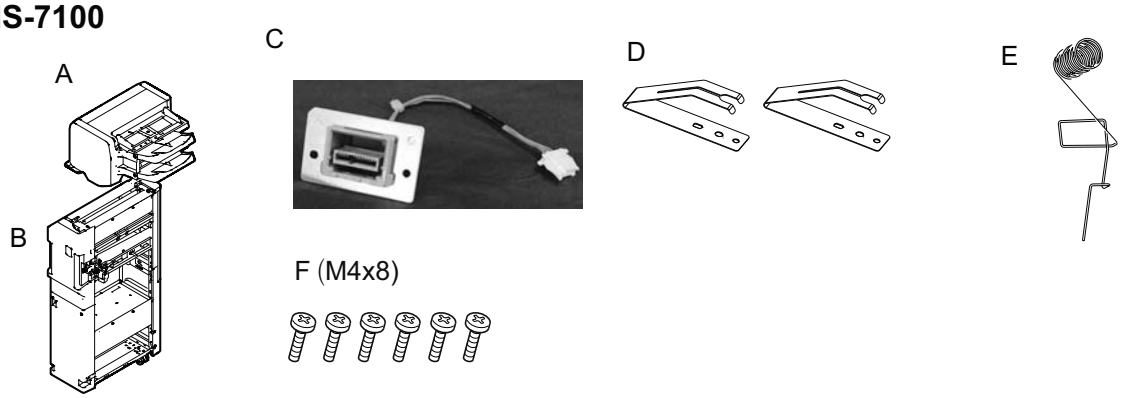

AK-7110

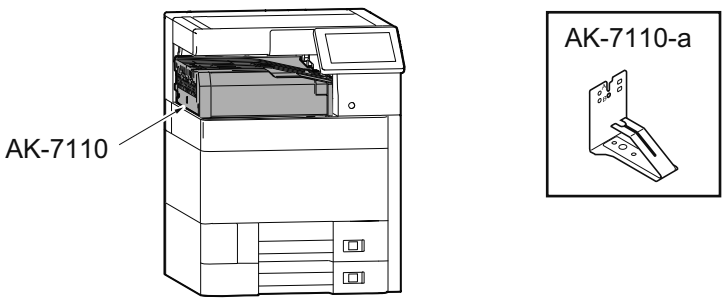

DF-7140

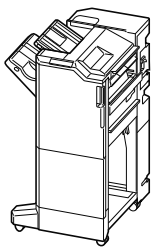

DF-7150

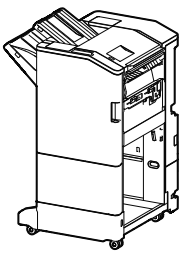

(EN) Install E that is bundled in (a) section before installing the AK-7110.
Refer to the service manual for the installation procedure of the AK-7110.

(FR) Installez E qui est regroupé dans la section (a) avant d'installer l’ AK-7110.
Reportez-vous au manuel de service pour la procédure d'installation de l’ AK-7110.

(ES) Instale E, que se incluye en el paquete de la sección (a), antes de instalar AK-7110.
Consulte el manual de servicio para obtener información sobre el procedimiento de instalación de AK-7110.

(DE) Befestigen Sie E, das sich im Bereich (a) befindet, bevor Sie den AK-7110 installieren.
Hinweise zur Installation des AK-7110 finden Sie im Servicehandbuch.

(IT) Prima di installare AK-7110, installare E incluso nella sezione (a).
Vedere sul manuale tecnico la procedura di installazione di AK-7100.

(ZHCN) 在安装 AK-7110 之前，请安装（a）部分中附带的 E。
有关 AK-7110 的安装步骤，请参阅维修手册。

(KO) AK-7110을 설치하기 전에 (a) 섹션에 번들로 제공되는 E를 설치하십시오.
AK-7110의 설치 절차는 서비스 매뉴얼을 참조하십시오.

(JA) AK-7110 を設置する前に、(a) 部に同梱物 E を取り付けて下さい。
AK-7110 の設置手順はサービスマニュアルをご参照下さい。

---

1 Main Unit



①

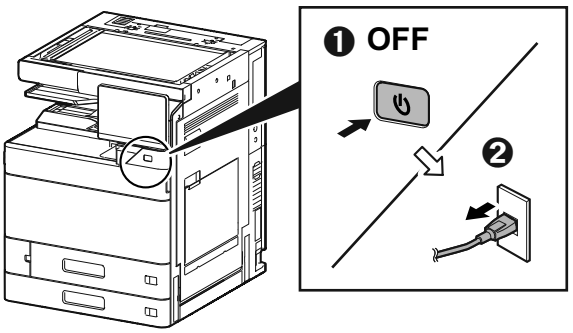

②

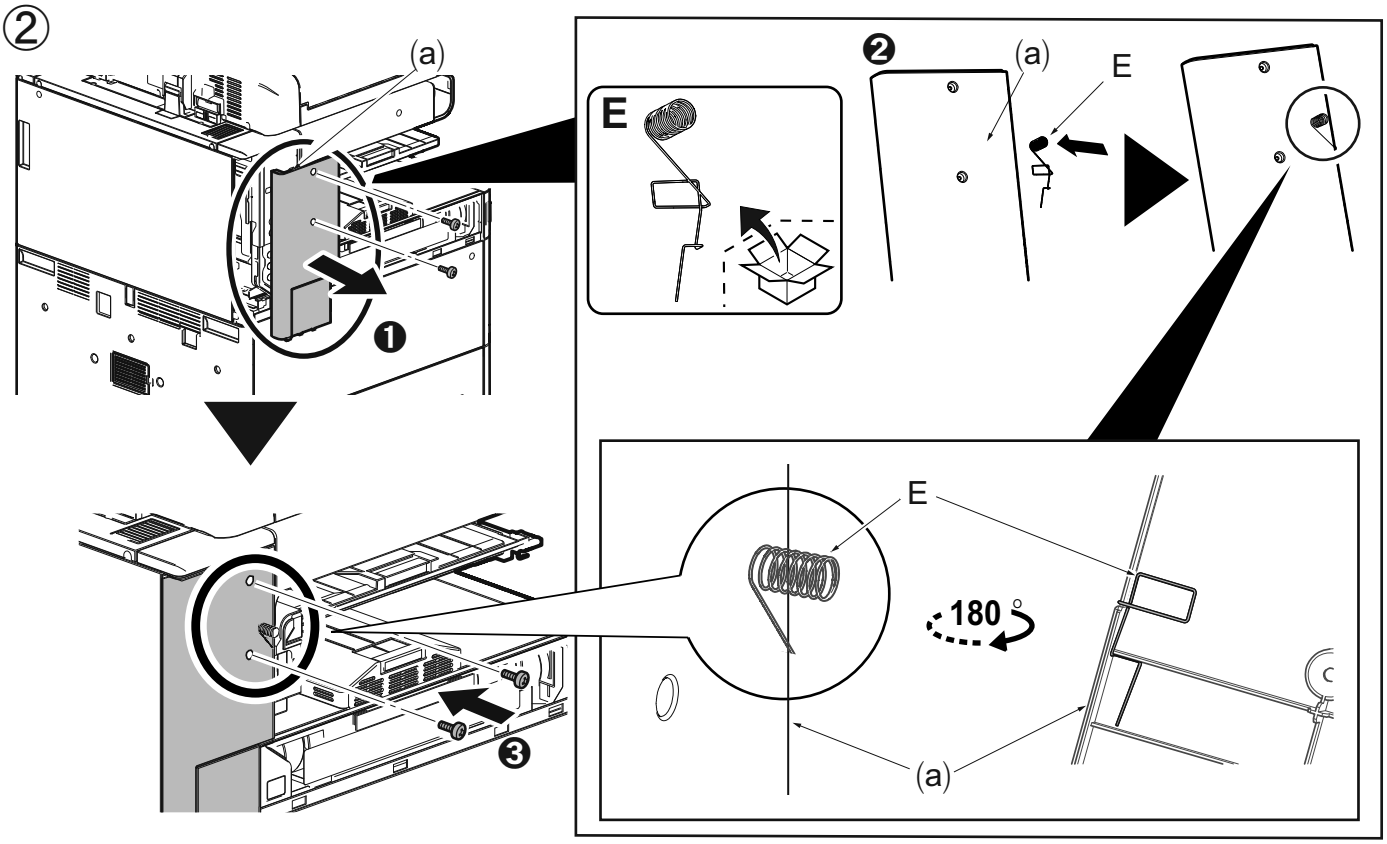

③

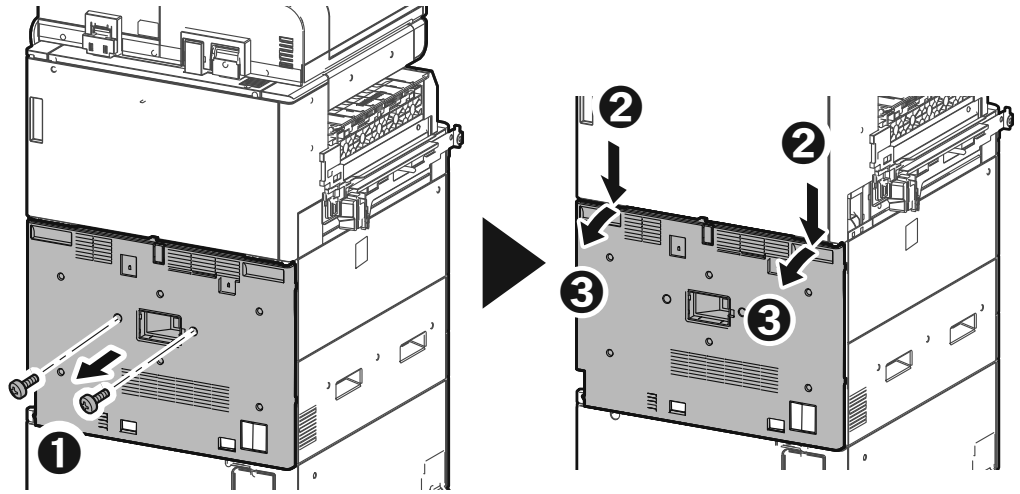

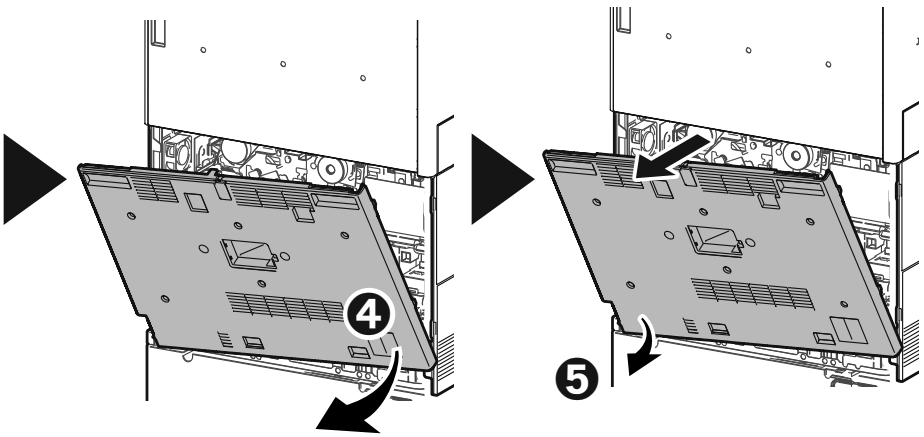

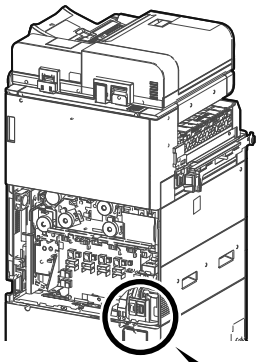

④

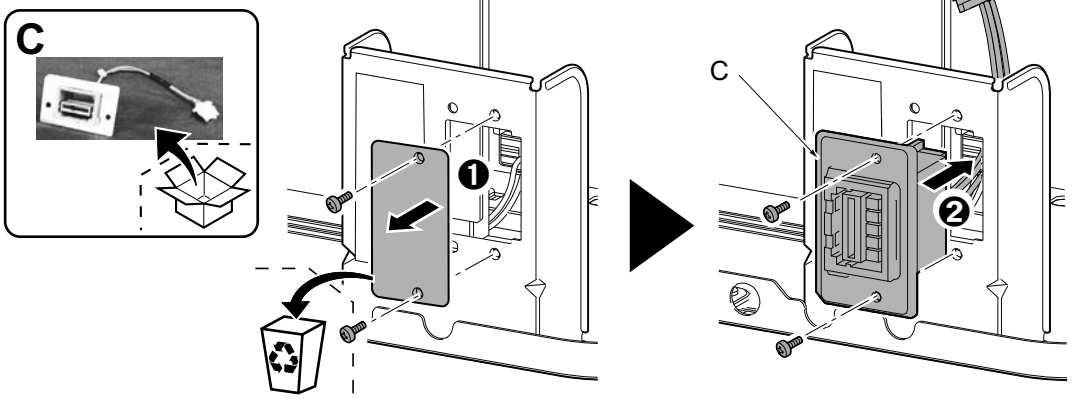

⑤

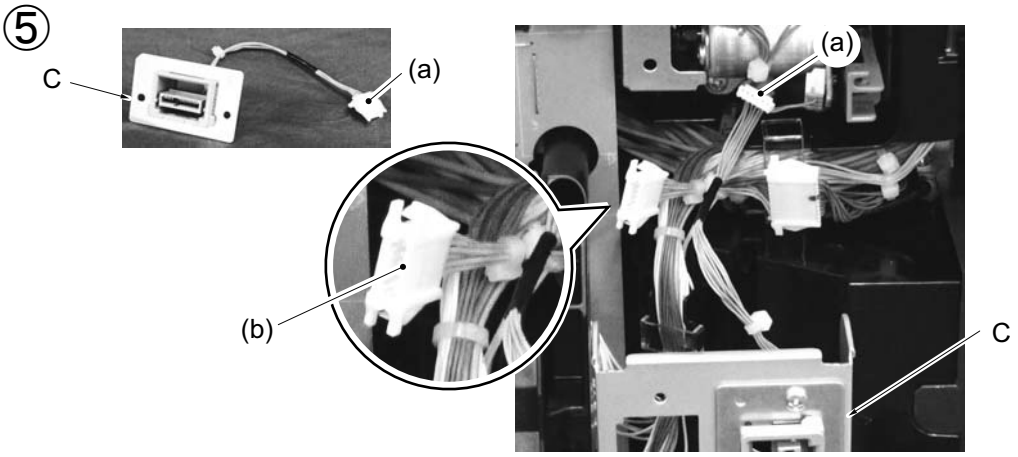

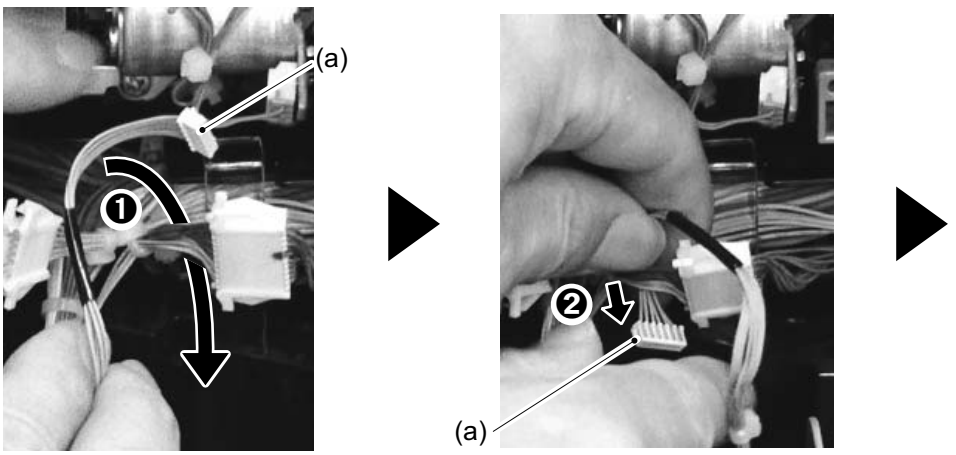

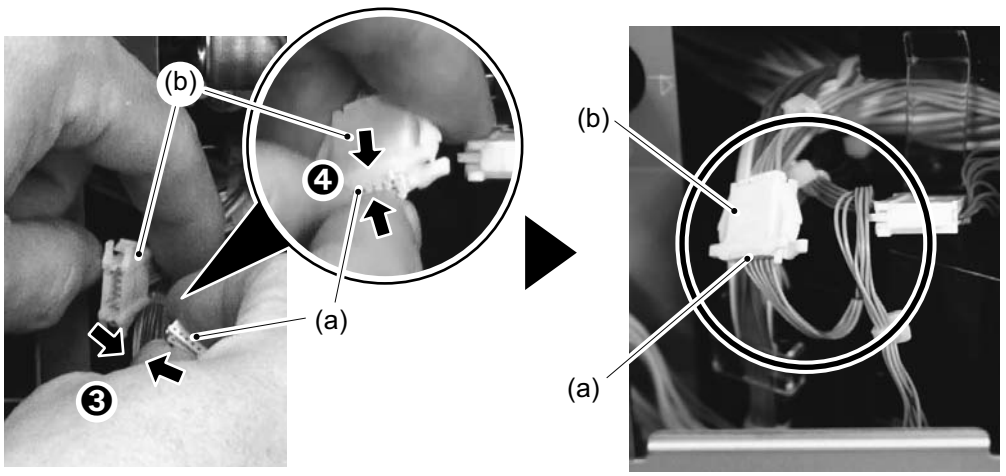

⑥

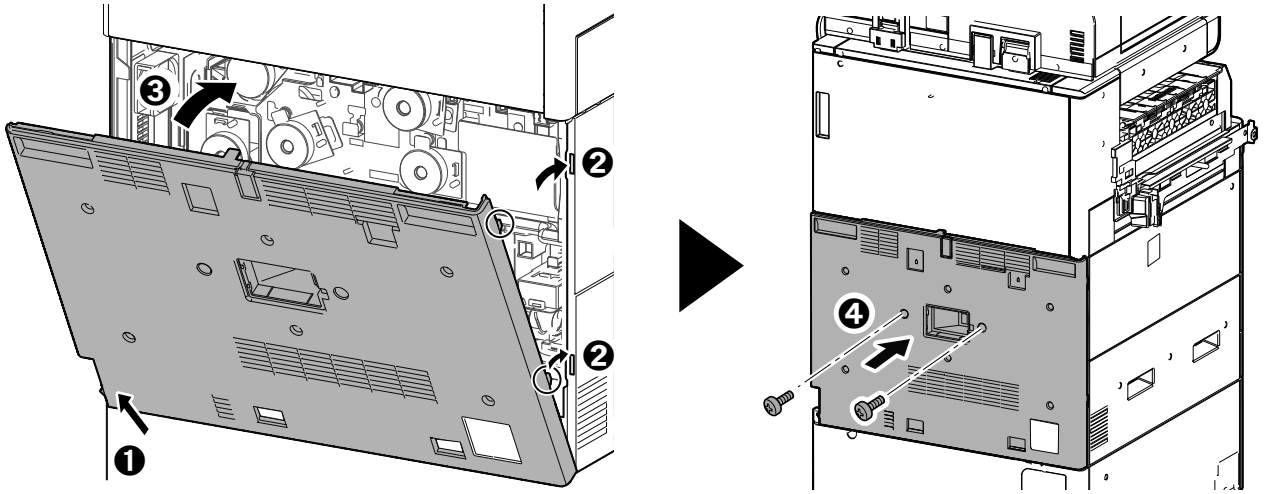

2 IS-7100



①

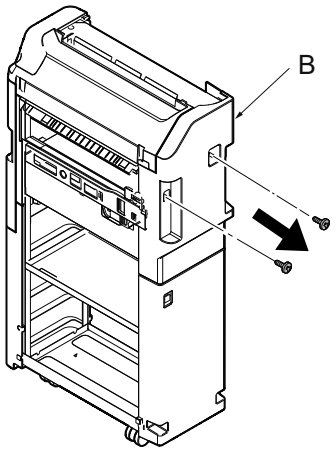

②

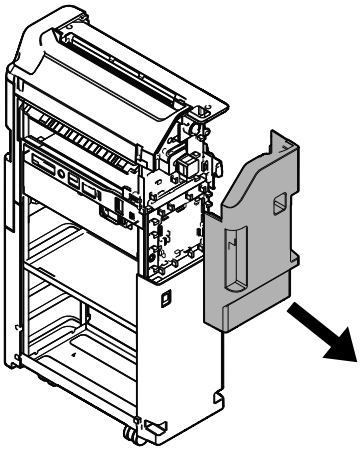

③

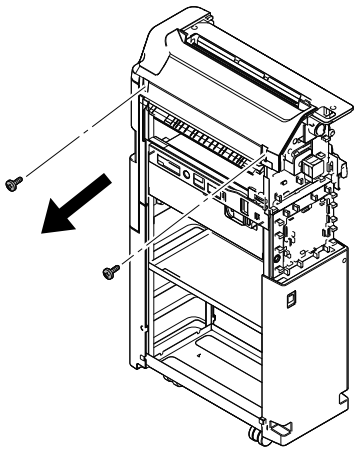

④

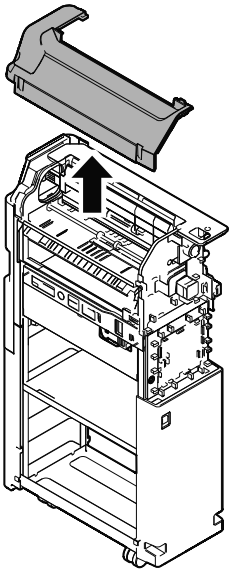

⑤

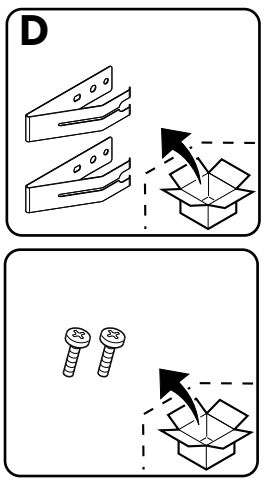

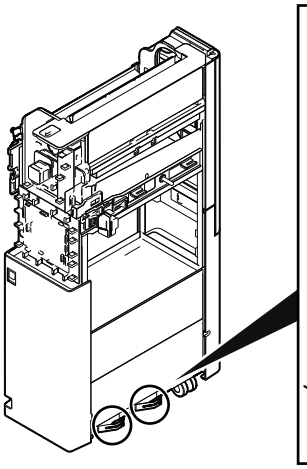

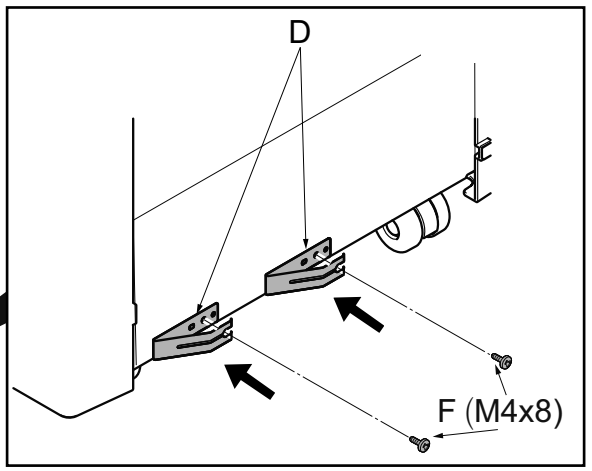

3 IS-7100
DF-7140/DF-7150



①

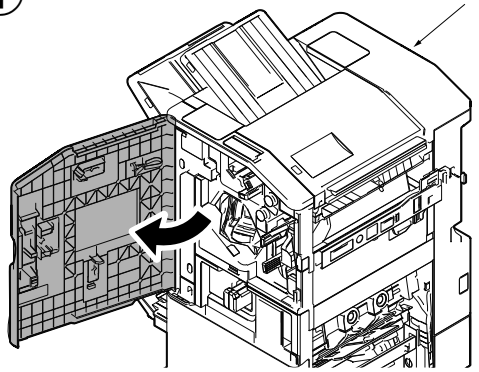

②

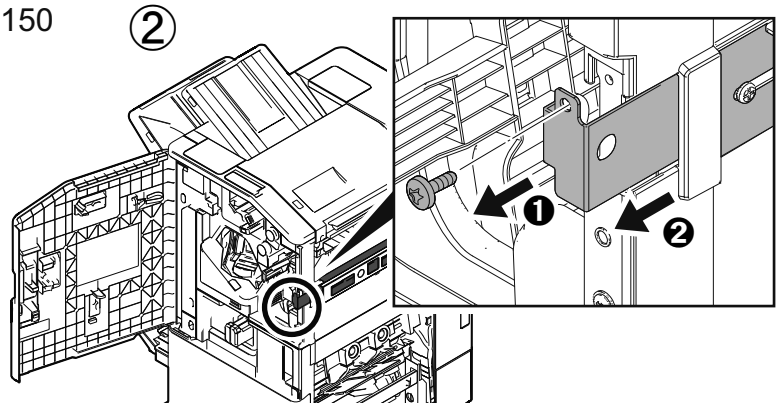

③

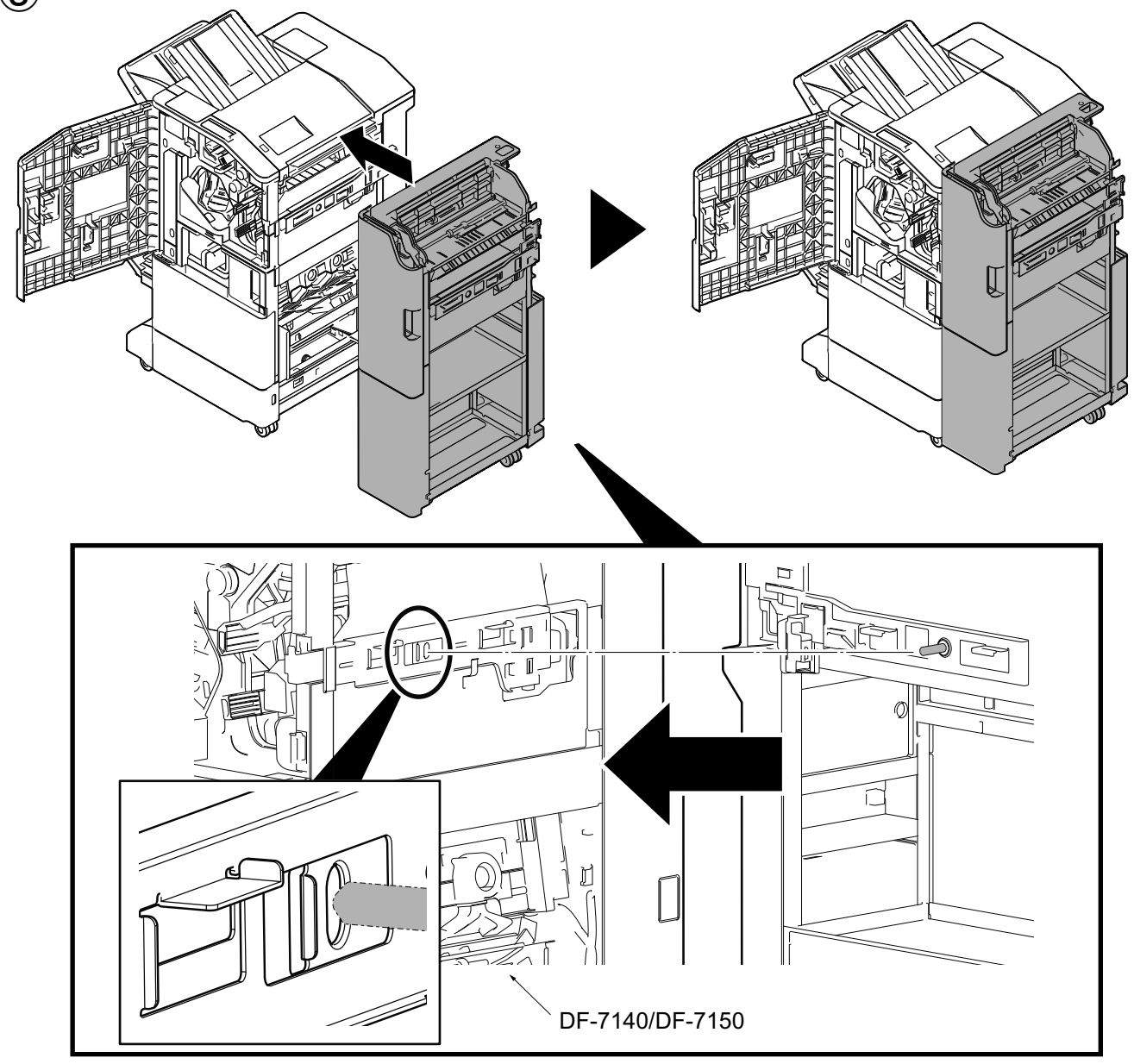

④

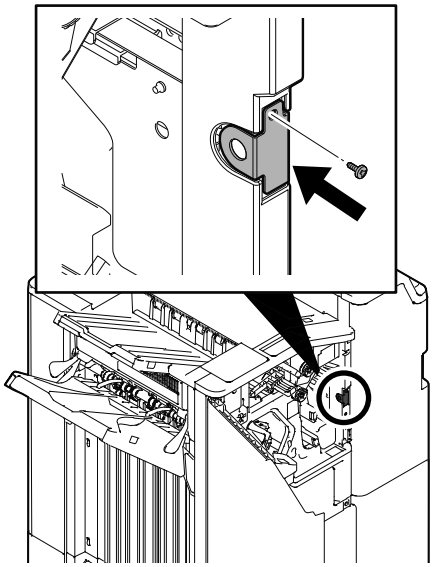

⑤

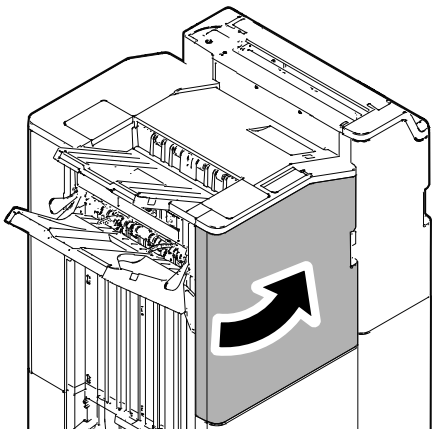

⑥

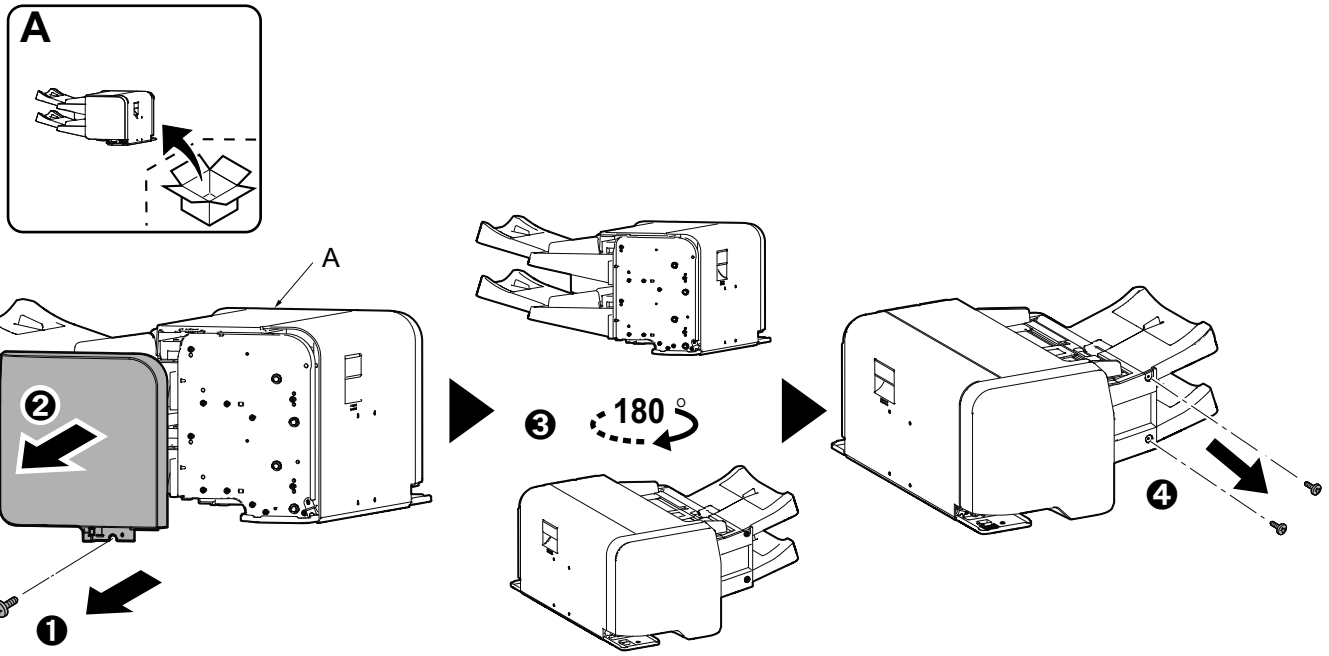

⑦

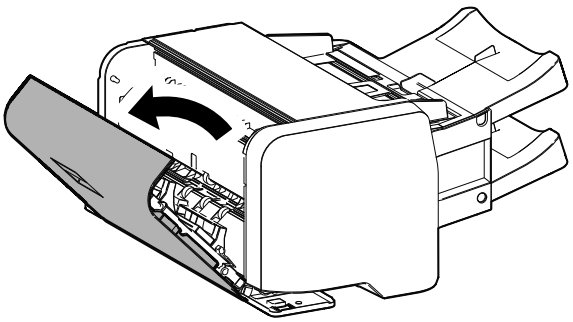

⑧

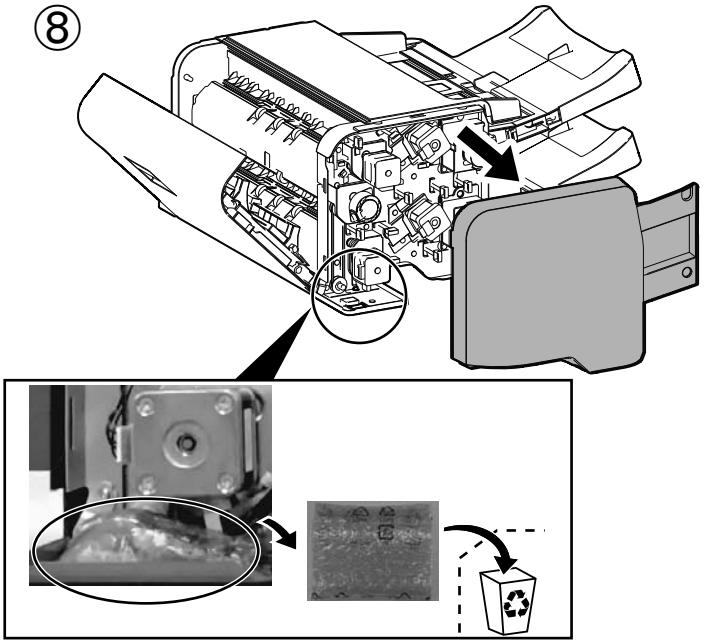

⑨

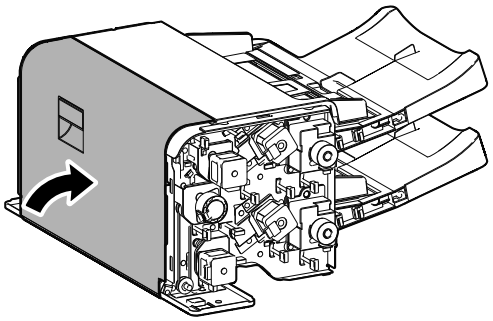

⑩

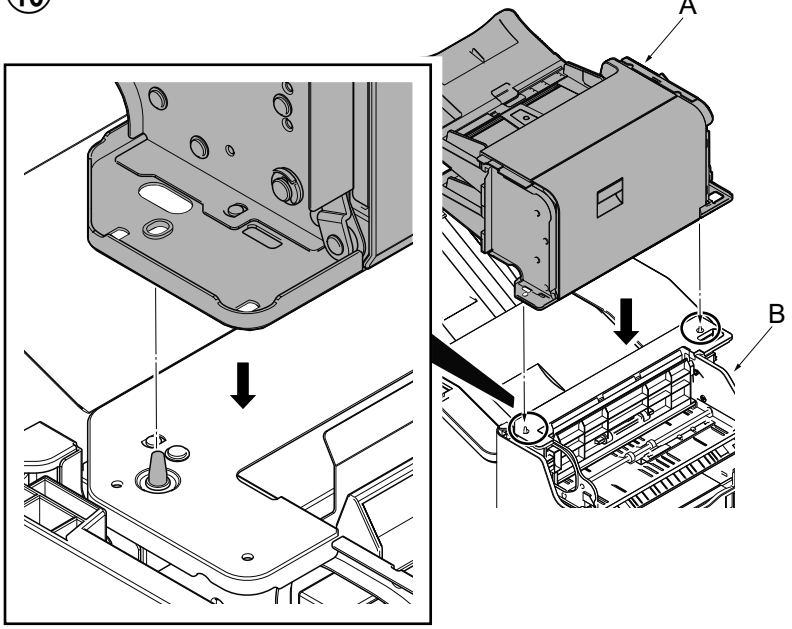

⑪

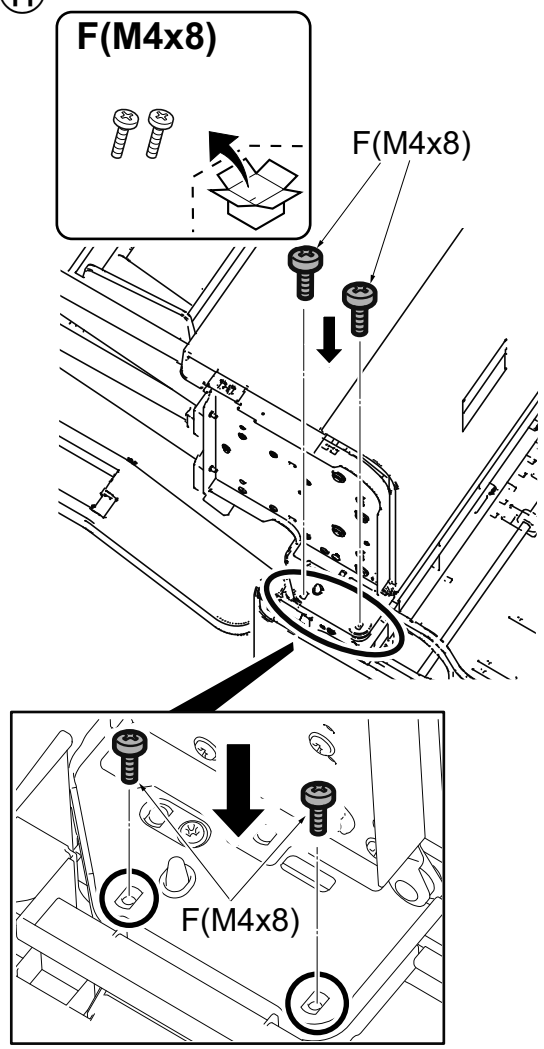

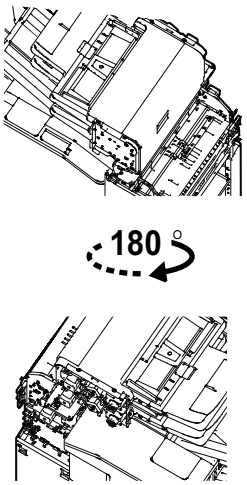

⑫

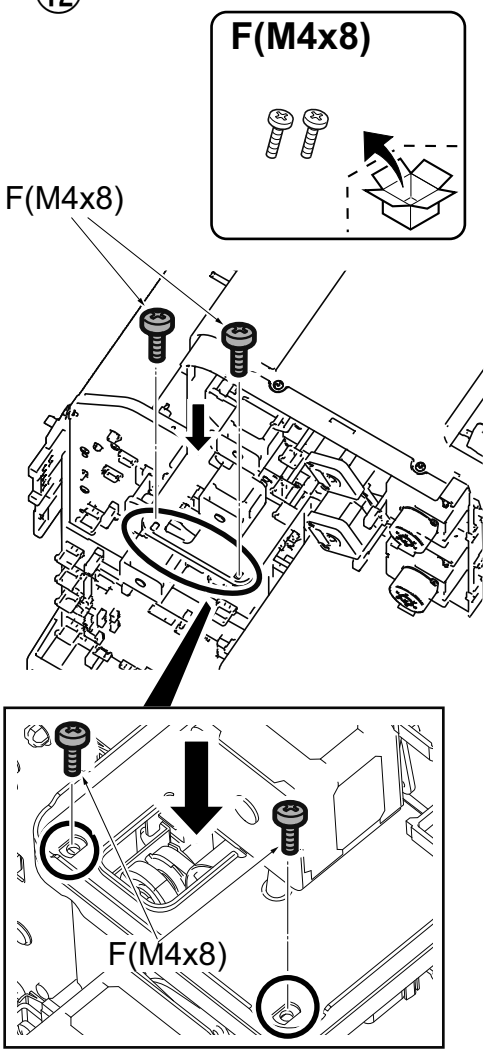

⑬

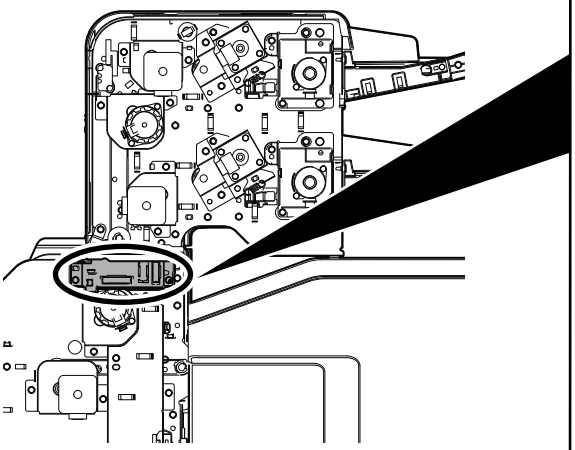

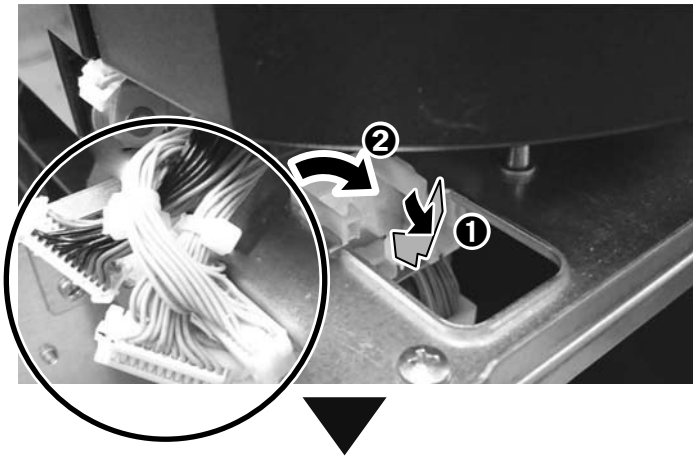

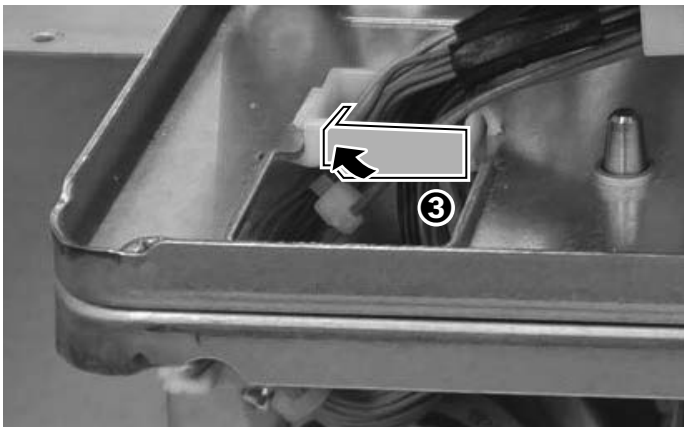

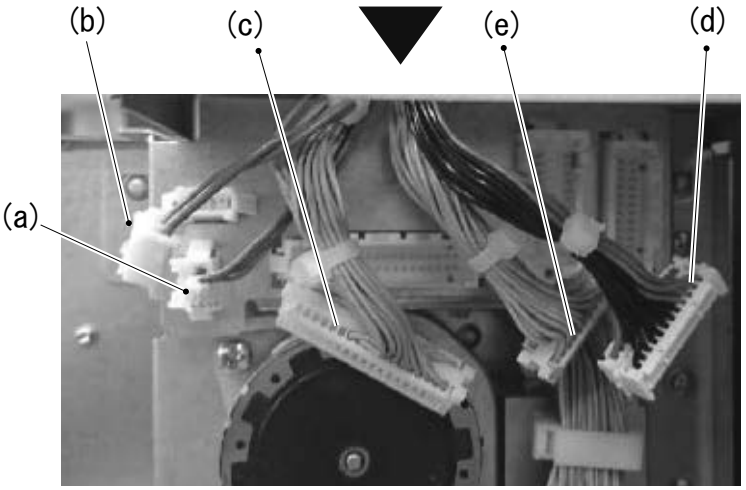

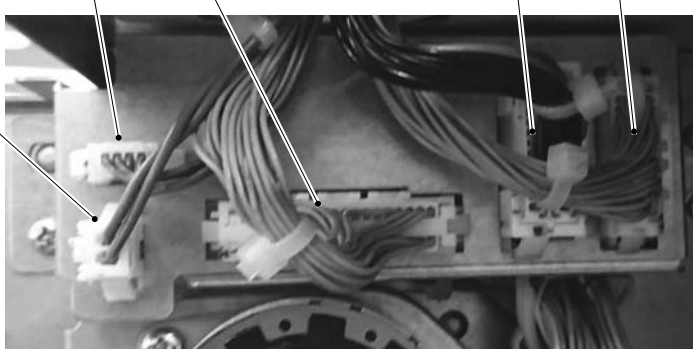

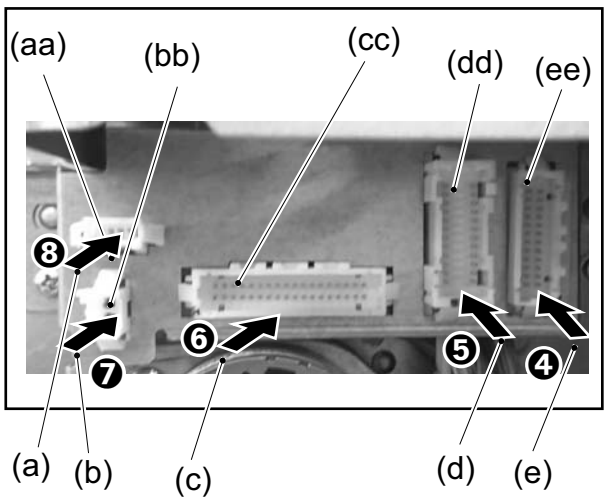

⑭

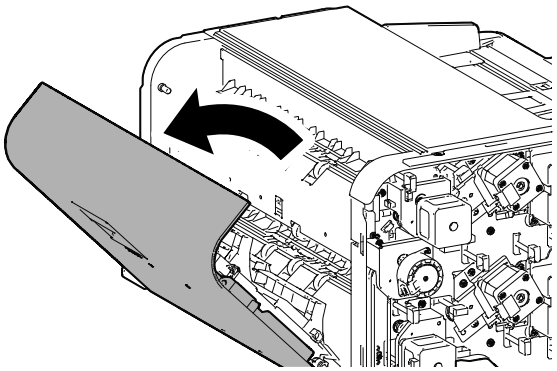

⑮

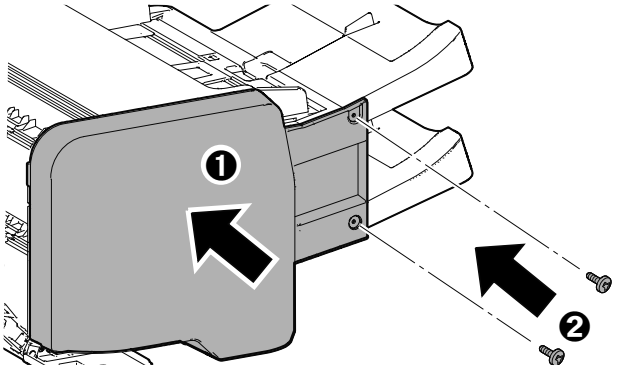

⑯

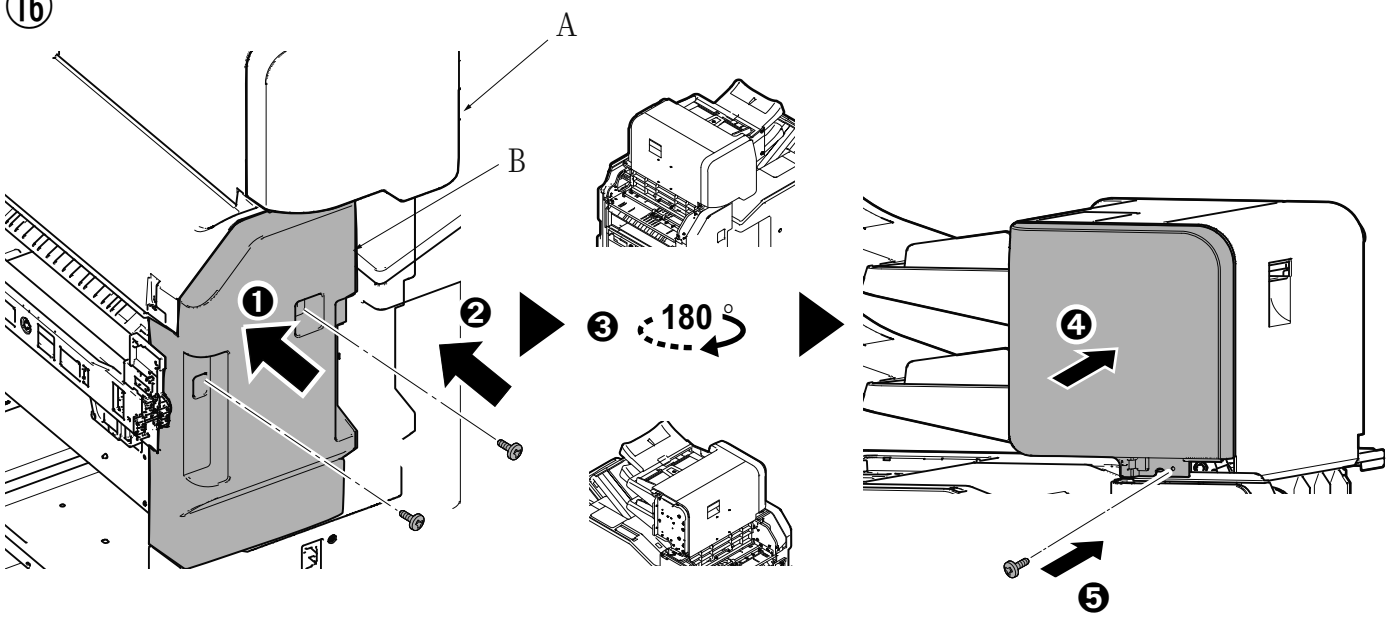

⑰

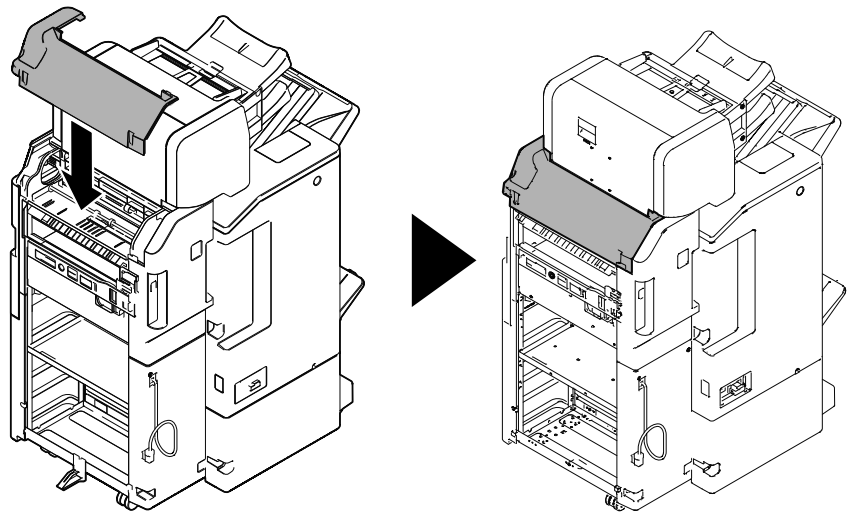

⑱

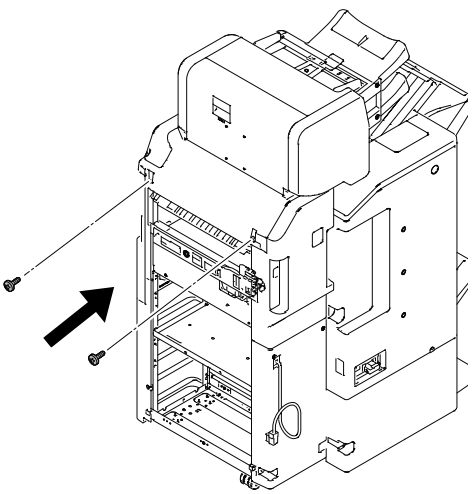

⑲

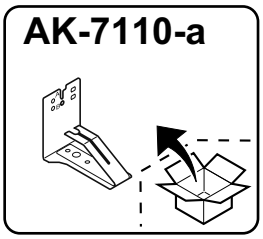
AK-7110-a

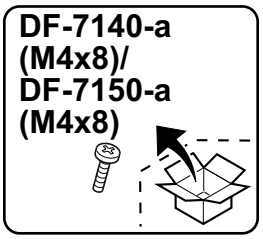
DF-7140-a
(M4x8)/
DF-7150-a
(M4x8)

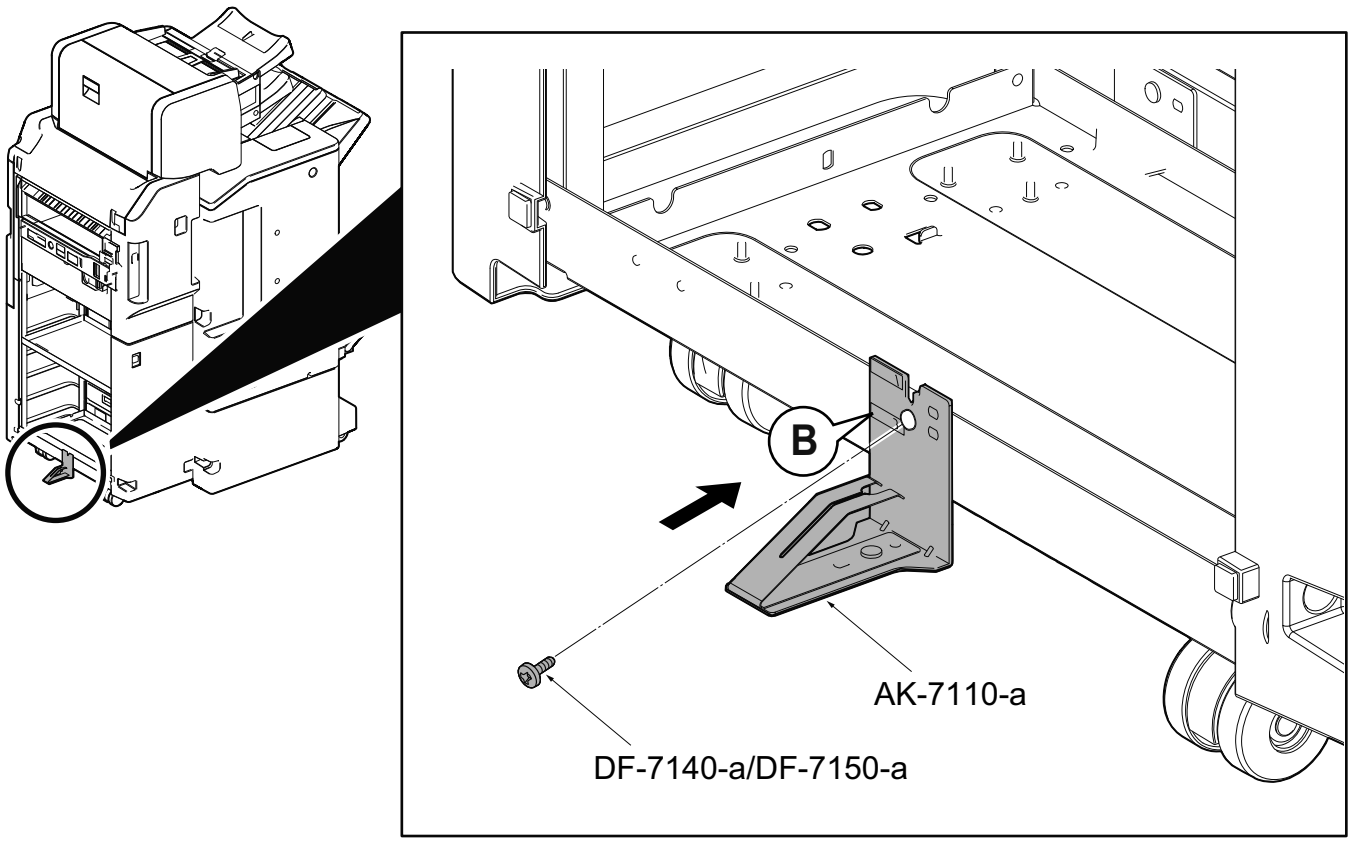
B
AK-7110-a
DF-7140-a/DF-7150-a

4 IS-7100
DF-7140/DF-7150
Main Unit



①

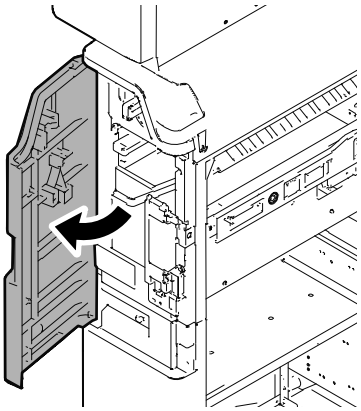

②

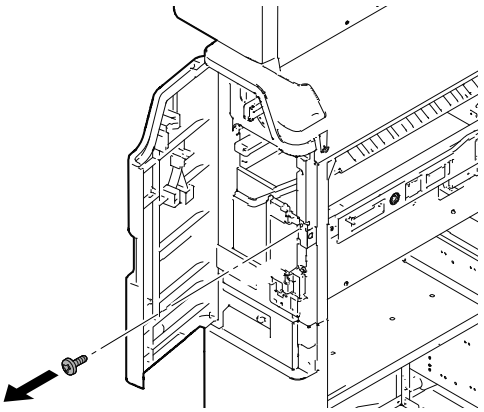

③

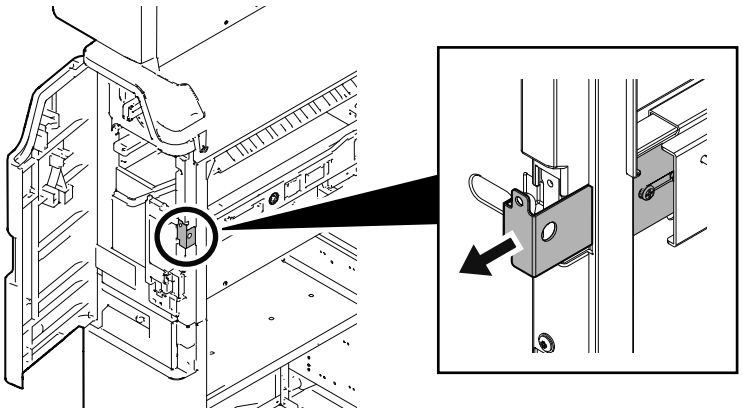

④

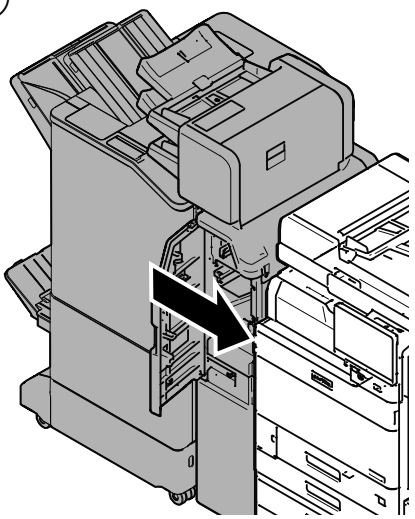

⑤

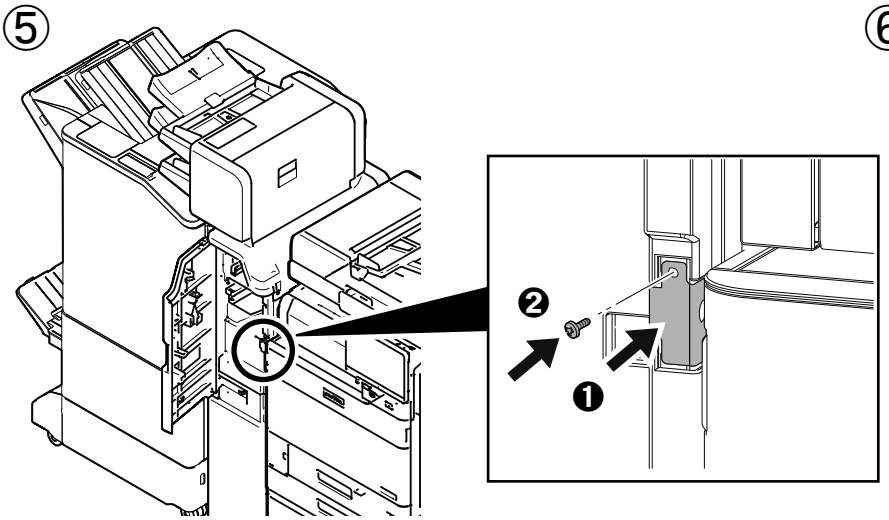

⑥

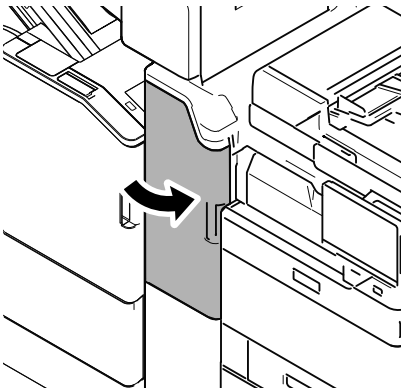

⑦

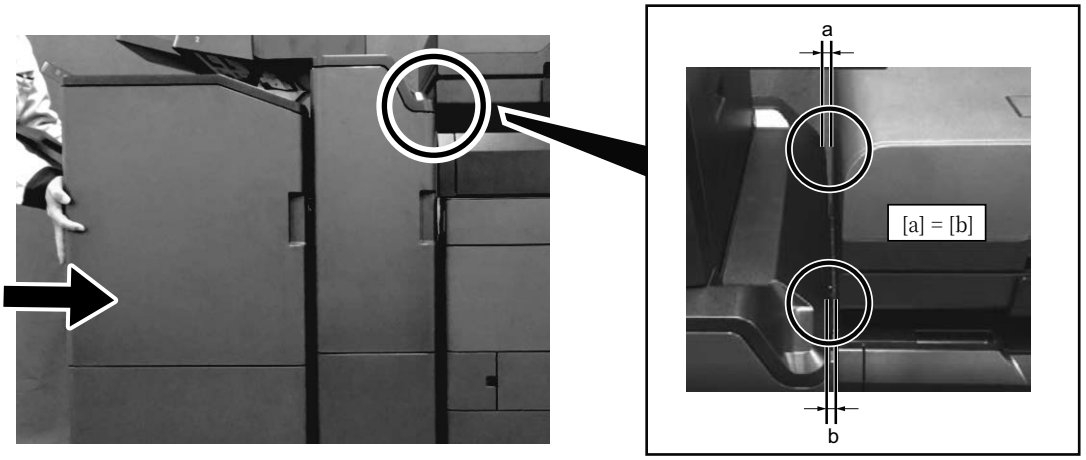

⑧

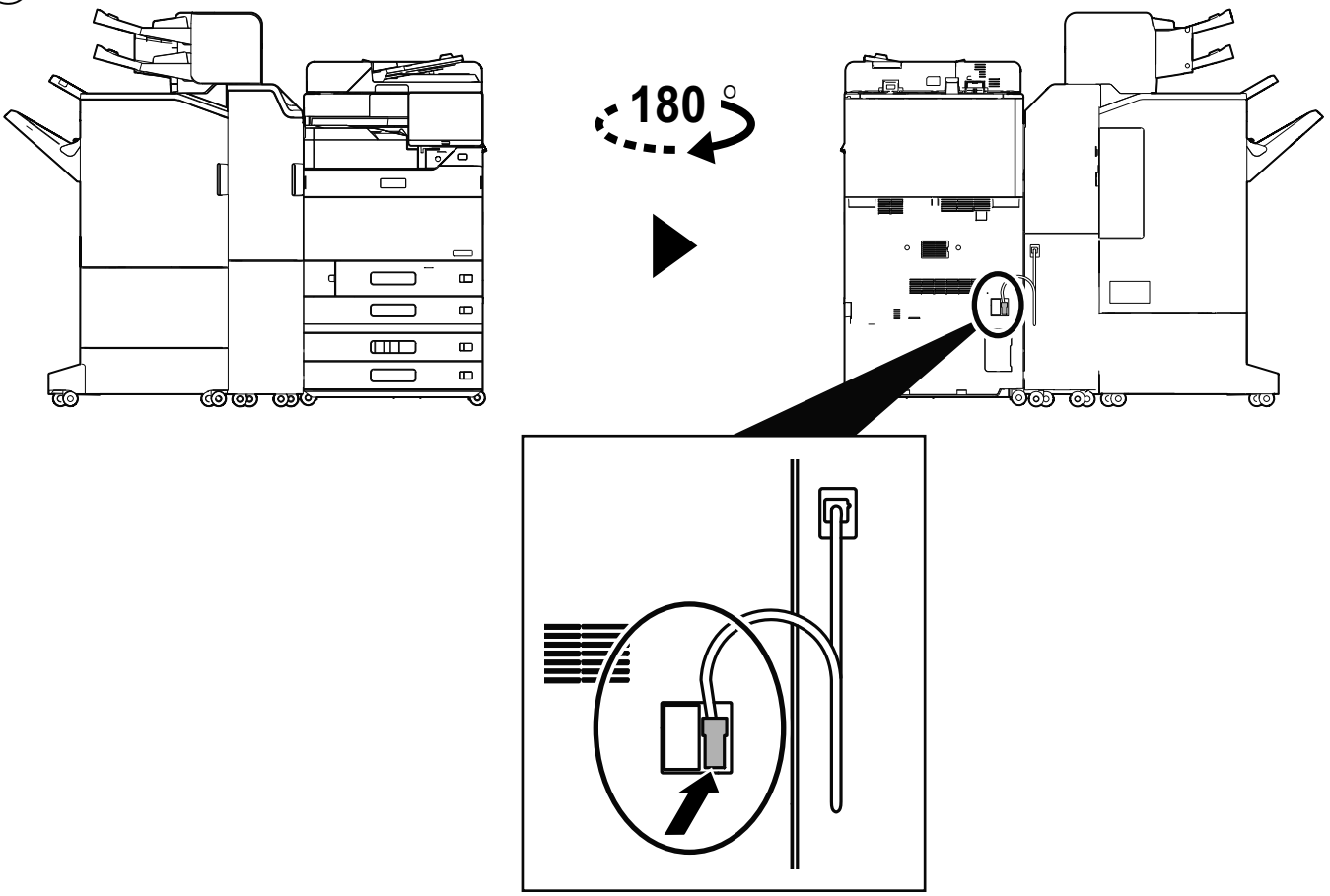

⑨

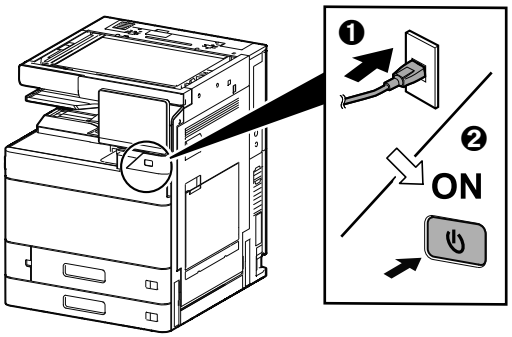



2021.4
303TF5671002

JS-7100

303RN5671101
2020. 4
303RN5671101

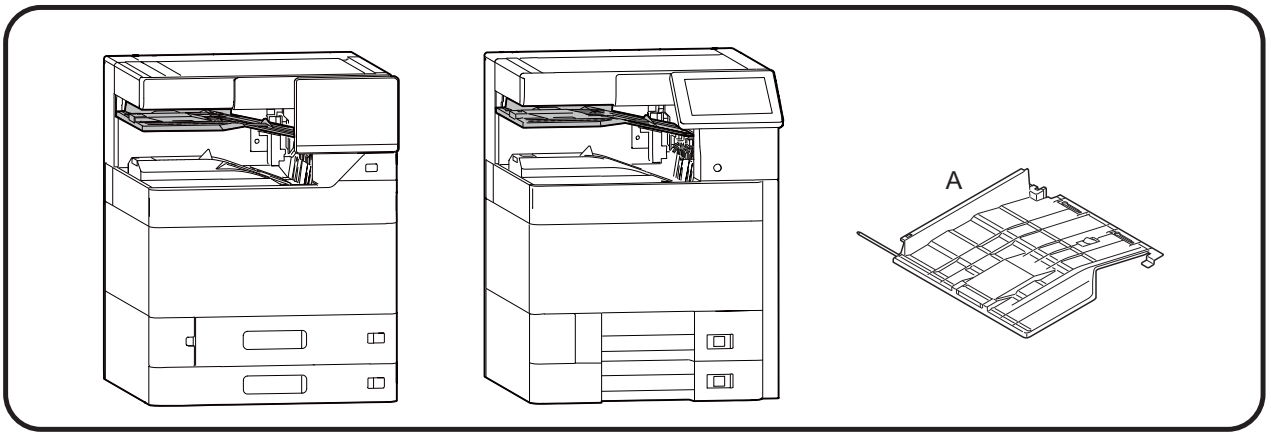

(EN) Be sure to remove any tape and/or cushioning materials from the parts supplied.
(FR) Veillez à retirer les morceaux de bande adhésive et/ou les matériaux de rembourrage des pièces fournies.
(ES) Asegúrese de quitar todas las cintas y/o material amortiguador de las partes suministradas.
(DE) Stellen Sie sicher, dass sämtliche Klebebänder und/oder Polstermaterial von den gelieferten Teilen entfernt wurden.
(IT) Rimuovere tutti i nastri adesivi e/o i materiali di protezione dalle parti fornite.
(ZHCN) 如果附属品上带有固定胶带、缓冲材料时，请务必揭下。
(KO) 동봉품에 고정 테이프 , 완충재가 붙어 있는 경우에는 반드시 제거하십시오.
(JA) 同梱品に固定テープ、緩衝材がついている場合は、必ず取り外すこと。

(EN) While the illustrations in this installation guide are for the MFP models, contents of the installation work are common for the MFP and printer models.
(FR) Les illustrations de ce guide d' installation concernent les modèles MFP, mais les interventions d' installation sont communes aux modèles MFP et imprimantes.
(ES) Aunque las ilustraciones de esta guía de instalación hacen referencia a los modelos MFP, el contenido de los procedimientos de instalación es el mismo para los modelos MFP y de impresora.
(DE) Obwohl die Abbildungen in dieser Installationsanleitung sich auf MFPs beziehen, ist die Vorgehensweise für MFPs und Drucker die gleiche.
(IT) Sebbene le illustrazioni contenute in questa guida di installazione siano relative a modelli MFP, i contenuti della procedura di installazione sono gli stessi per MFP e stampanti.
(ZHCN) 安装步骤中的视图是 MFP 机型，不过 MFP 和打印机的安装步骤是相同的。
(KO) 이 설치 가이드는 MFP모델용이지만, 설치 작업은 MFP와 프린터 공통입니다.
(JA) 設置手順書内のイラストは、MFP ですが、設置作業は MFP/ プリンター共通です。

①

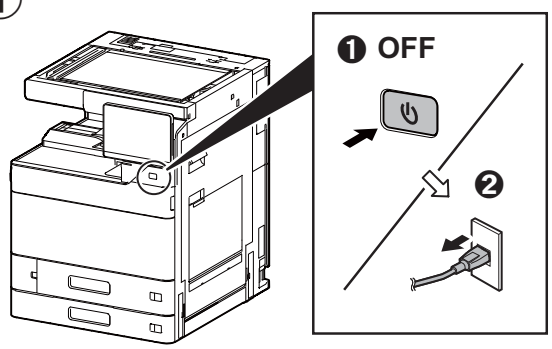

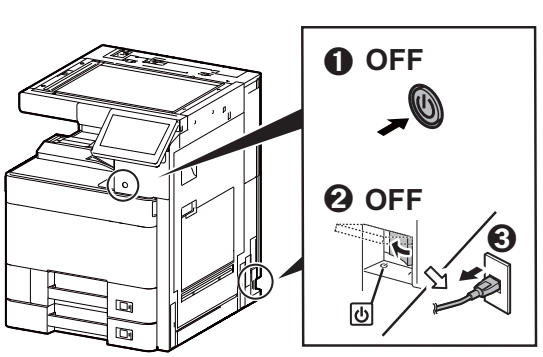

②

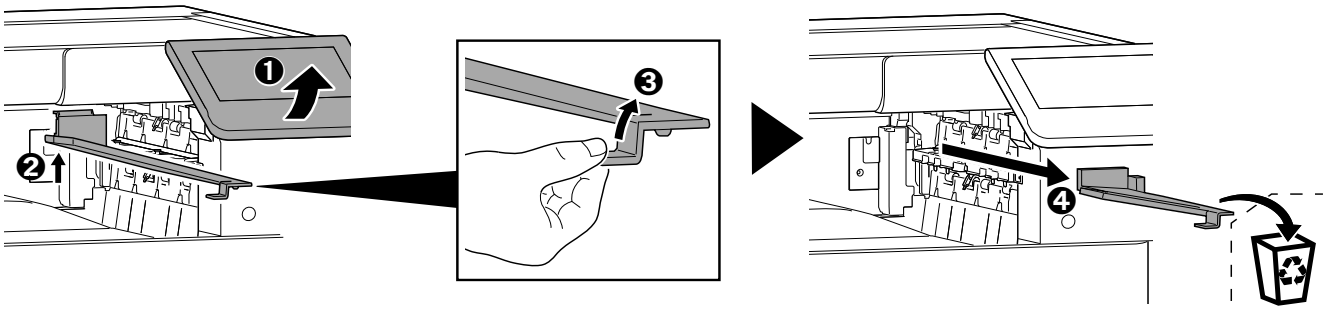

③

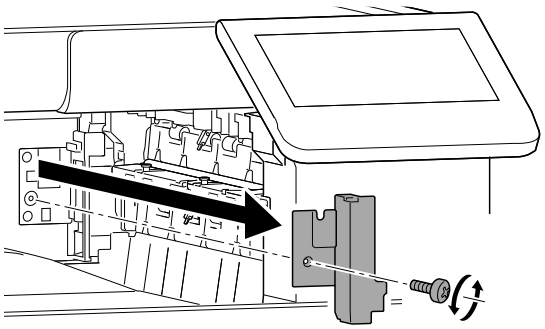

④

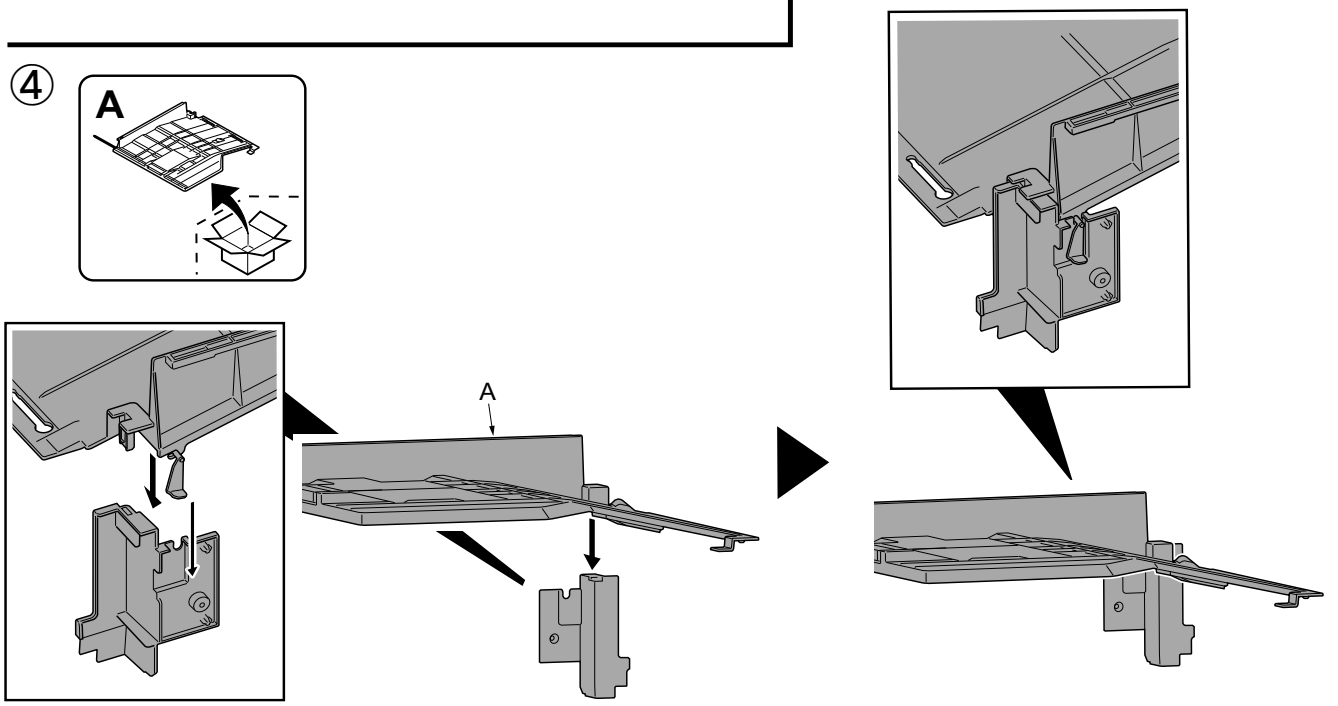

⑤

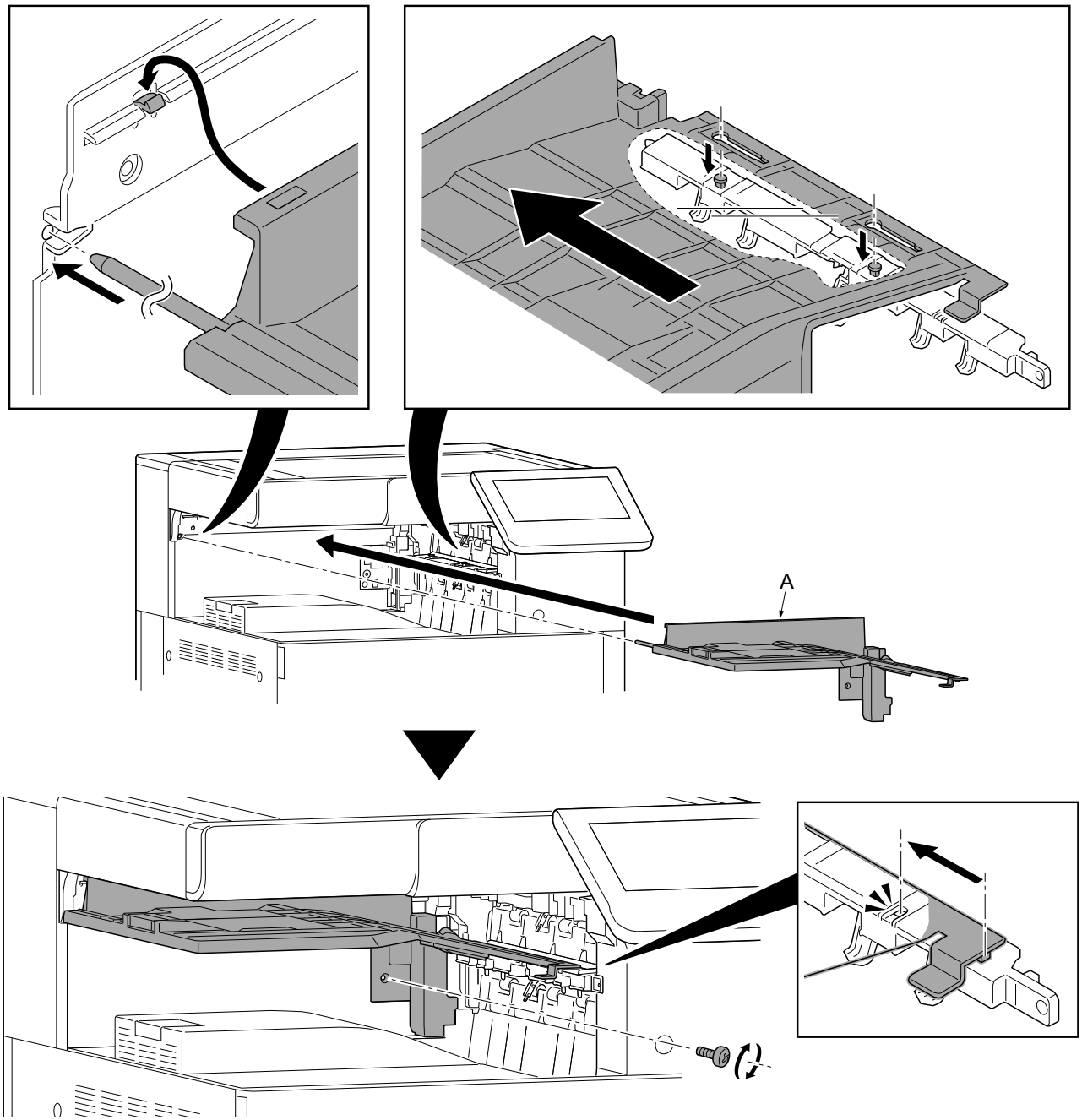

⑥

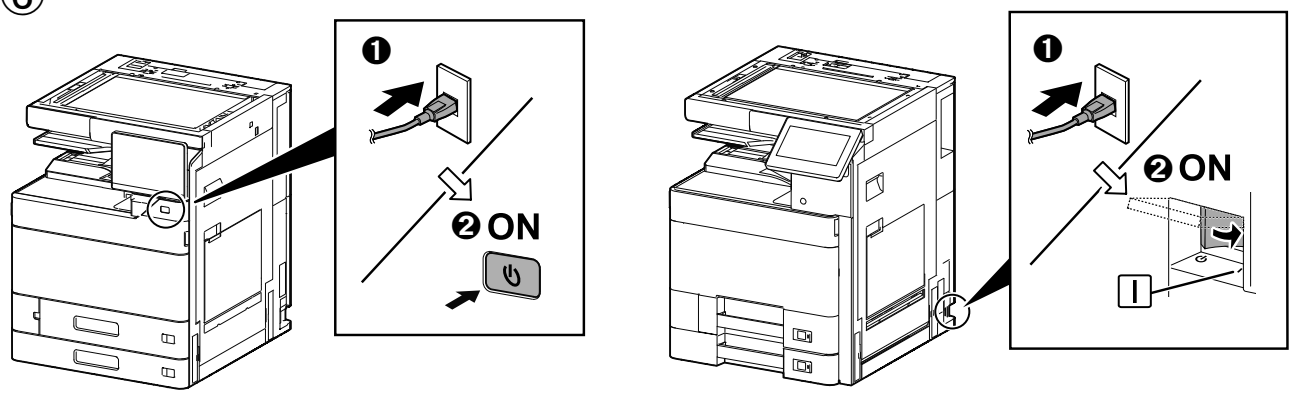

⑦ (EN) Set the maintenance mode U211, and set [Inner Job Separator] > [On].

(FR) Passez en mode maintenance U211 et paramétrer [Inner Job Separator] > [On].

(ES) Configure el modo de mantenimiento U211 y configure [Inner Job Separator] > [On] .

(DE) Aktivieren Sie den U-Parameter U211 und [Inner Job Separator] > [On].

(IT) Accedere al modo manutenzione U211, e selezionare [Inner Job Separator] > [On].

(ZHCN) 进入维修保养模式 U211，把 [Inner Job Separator] > [On]。

(KO) 메인터넌스 모드 U211 을 설정하고 [Inner Job Separator] > [On]를 설정합니다.

(JA) メンテナンスモード U211 をセットし、[Inner Job Separator] > [On] を設定する。

JS-7110

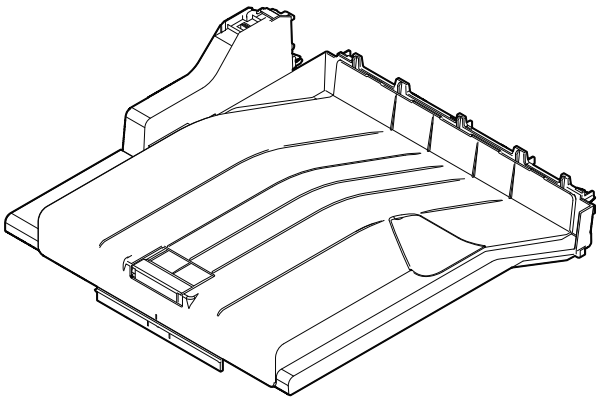

INSTALLATION GUIDE

GUIDE D'INSTALLATION

GUÍA DE INSTALACION

INSTALLATIONSANLEITUNG

GUIDA ALL'INSTALLAZIONE

安装手册

설치안내서

設置手順書

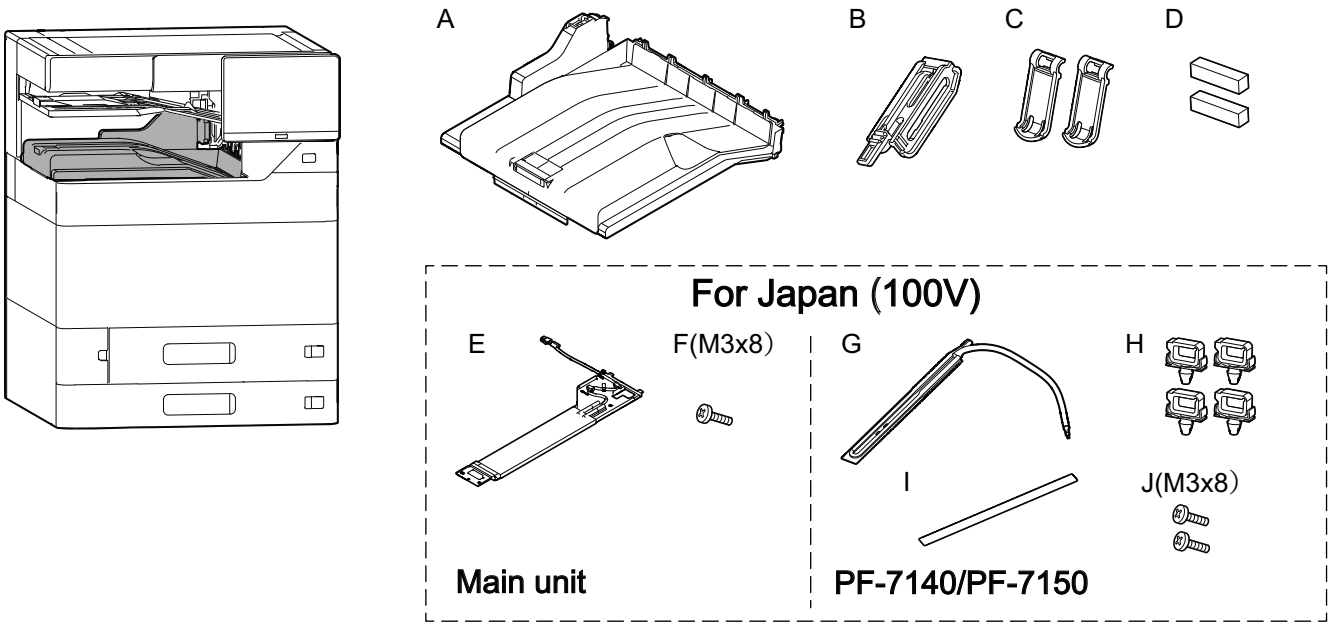

(EN) Japan specification (40/50/60/70ppm) only (100V)
(FR) Spécification pour le Japon (40/50/60/70 ppm) uniquement (100 V)
(ES) Especificaciones exclusivas para Japón (40/50/60/70 ppm) (100 V)
(DE) Technische Daten nur für Japan (40/50/60/70 Seiten/Minute) (100 V)
(IT) Specifiche solo per il Giappone (40/50/60/70 ppm) (100 V)
(ZHCN) 日本规格 (40/50/60/70ppm) (100V)
(KO) 일본 사양 (100V) 40/50/60/70ppm 제품에만 해당
(JA) 日本仕様 (100V) 40/50/60/70ppm のみ

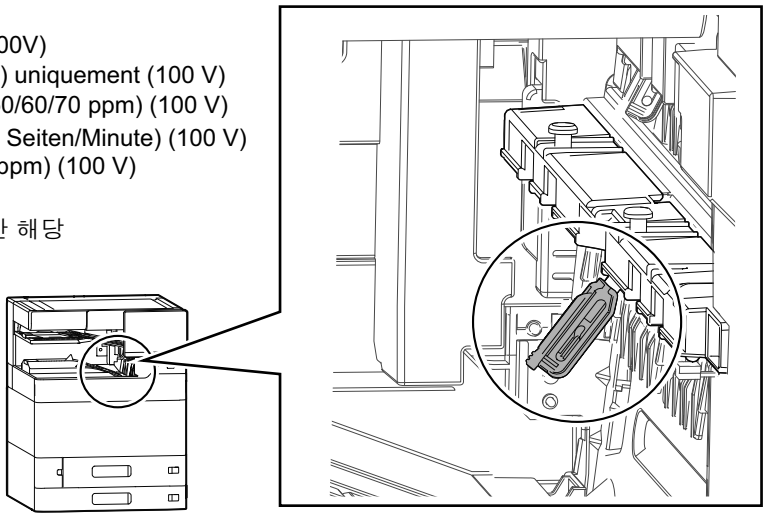

(EN) Be sure to remove any tape and/or cushioning materials from the parts supplied.
(FR) Veillez à retirer les morceaux de bande adhésive et/ou les matériaux de rembourrage des pièces fournies.
(ES) Asegúrese de quitar todas las cintas y/o material amortiguador de las partes suministradas.
(DE) Stellen Sie sicher, dass sämtliche Klebebänder und/oder Polstermaterial von den gelieferten Teilen entfernt wurden.
(IT) Rimuovere tutti i nastri adesivi e/o i materiali di protezione dalle parti fornite.
(ZHCN) 如果附属品上带有固定胶带、缓冲材料时，请务必揭下。
(KO) 동봉품에 고정 테이프 , 완충재가 붙어 있는 경우에는 반드시 제거하십시오.
(JA) 同梱品に固定テープ、緩衝材がついている場合は、必ず取り外すこと。

①

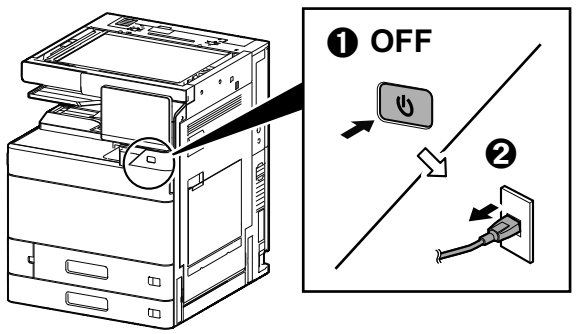

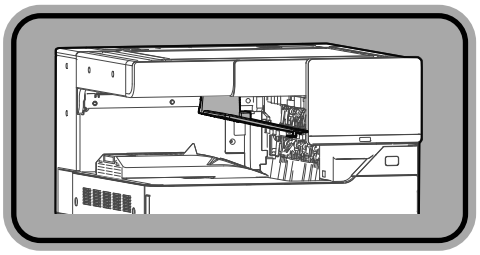

②–1

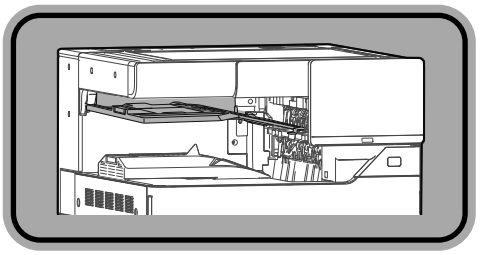

③–1

②-1

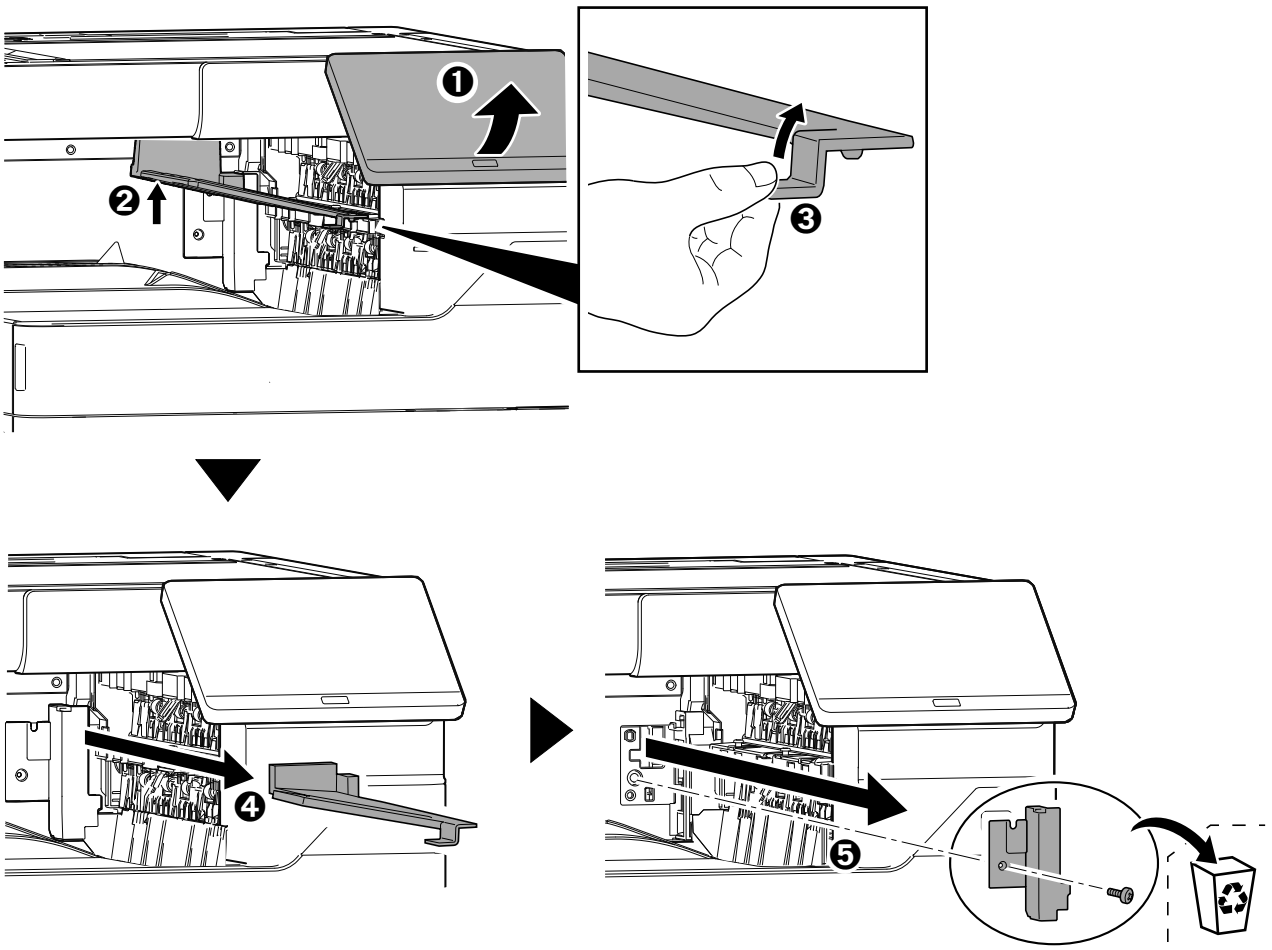

②-2

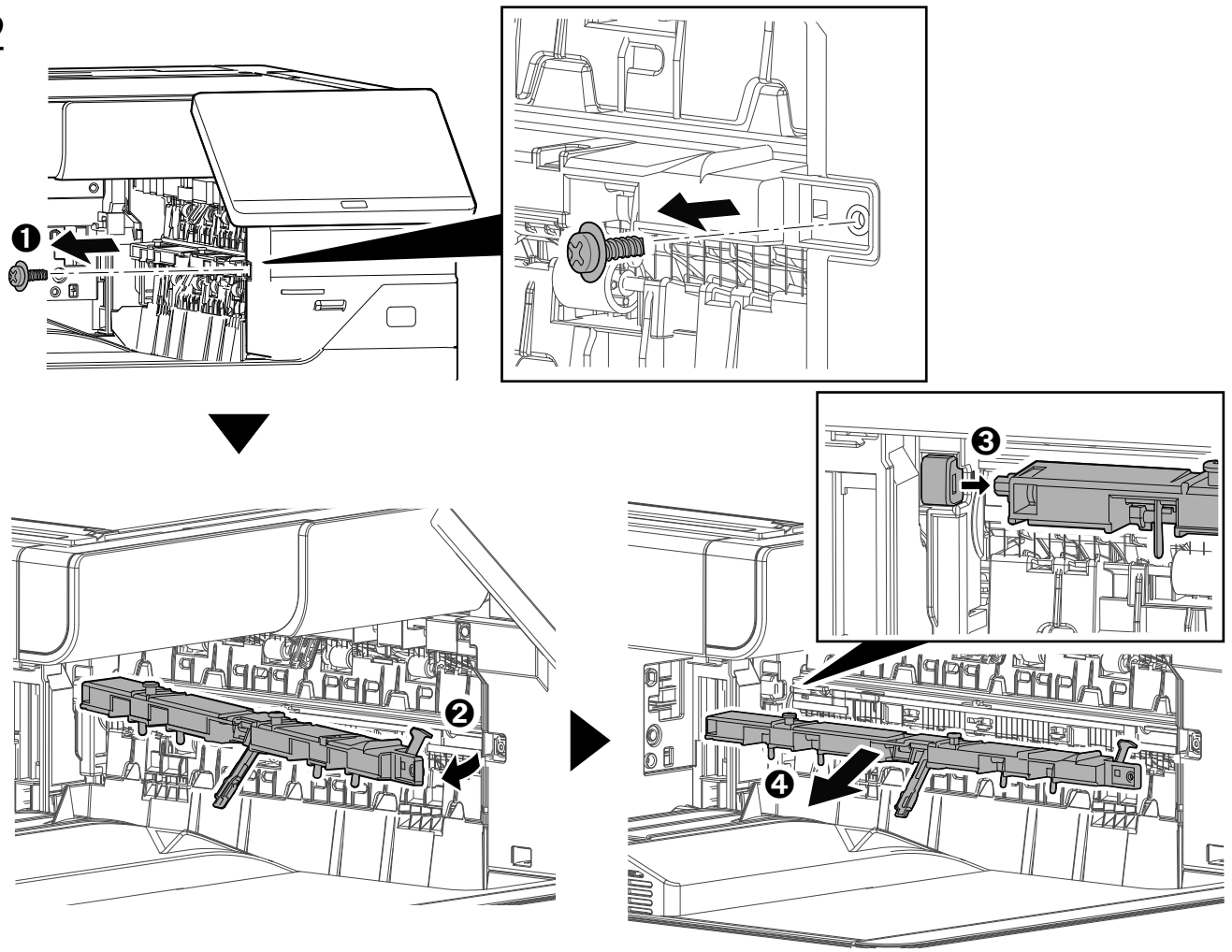

②−3

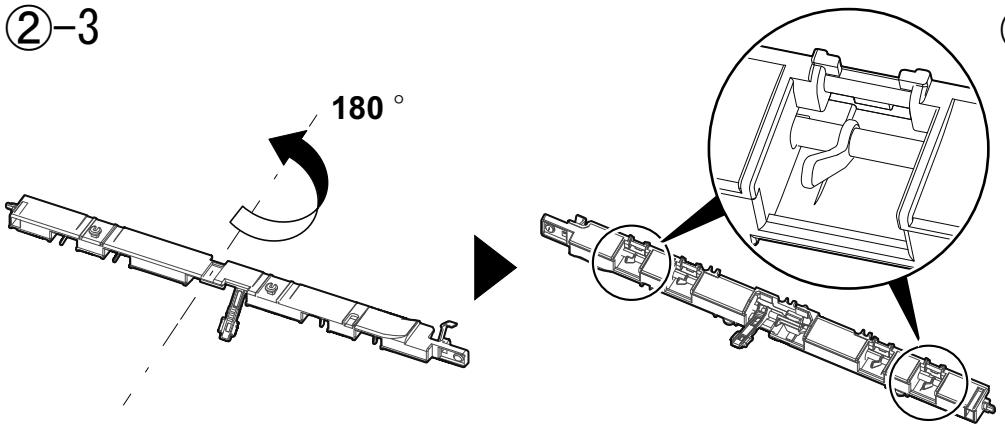

②−4

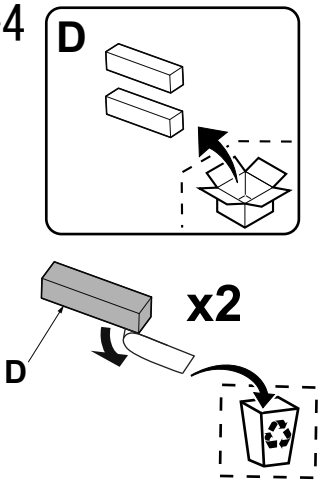

②−5

25/35ppm

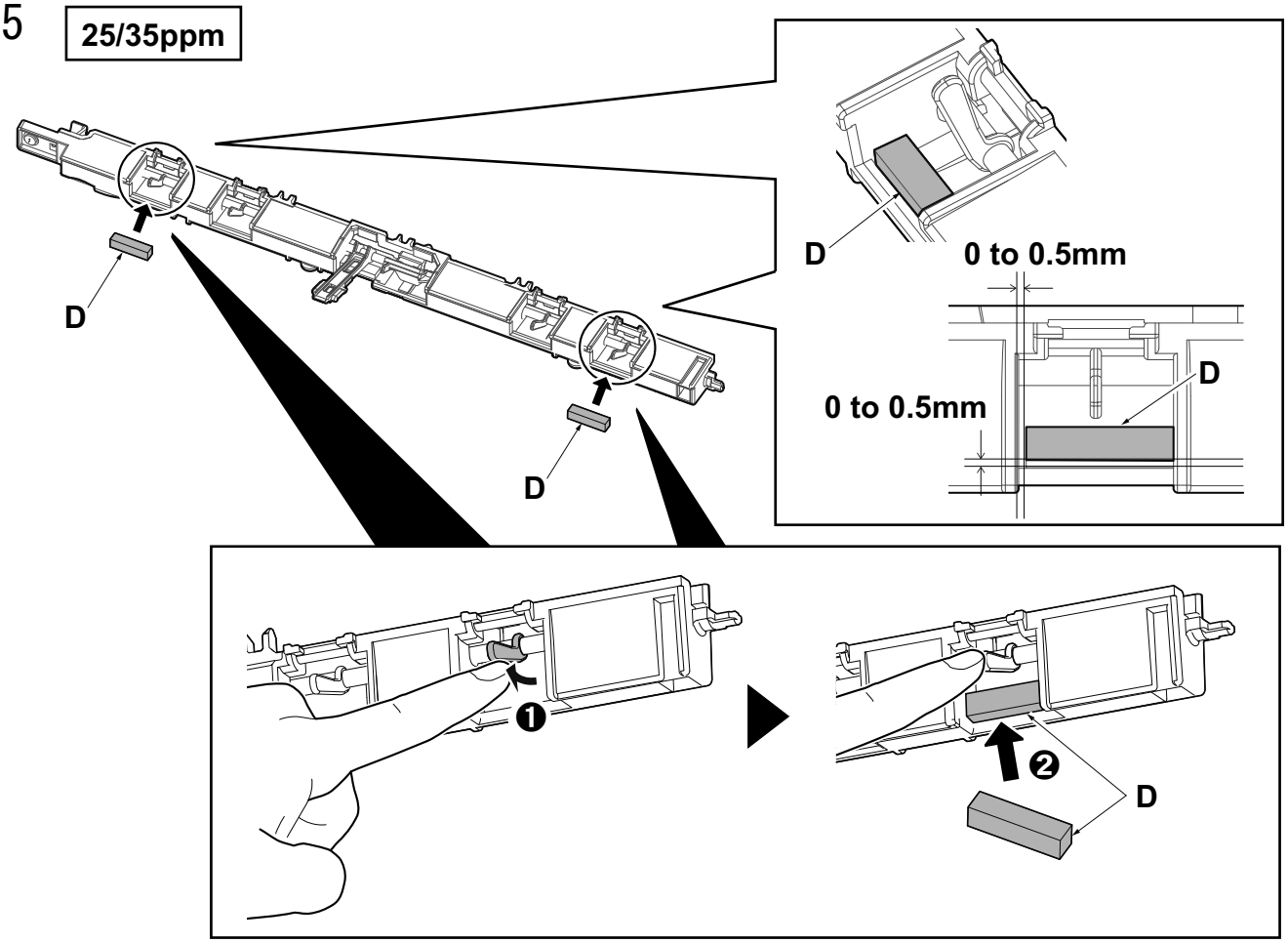

40/50/60/70ppm

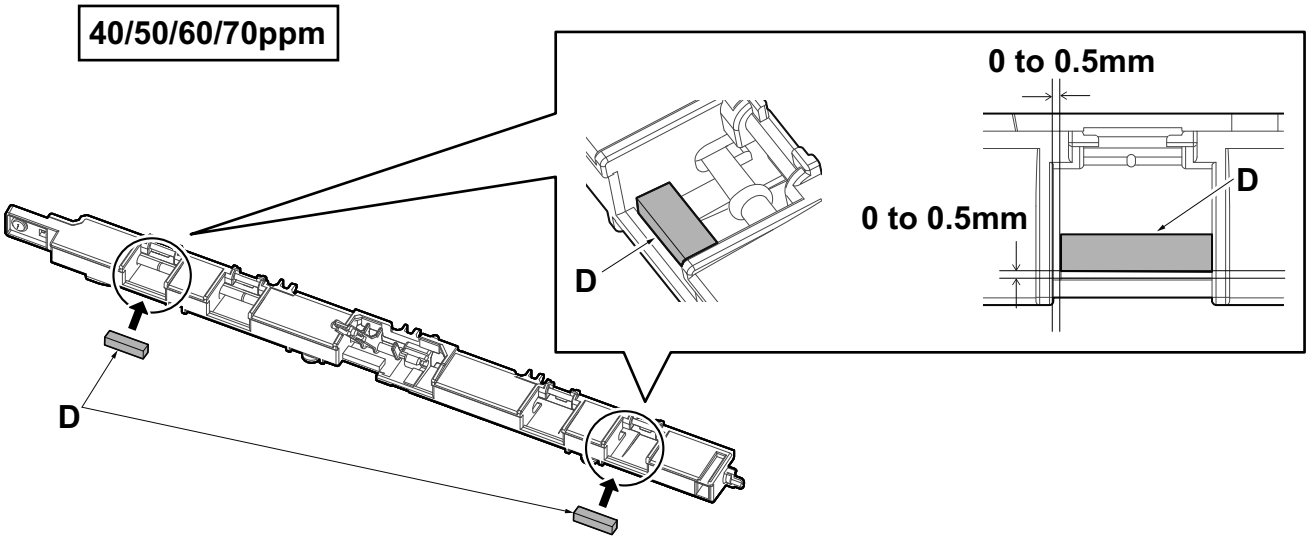

②-6

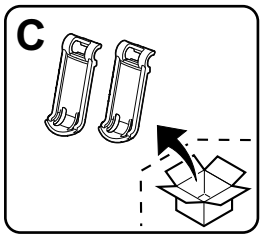

25/35ppm

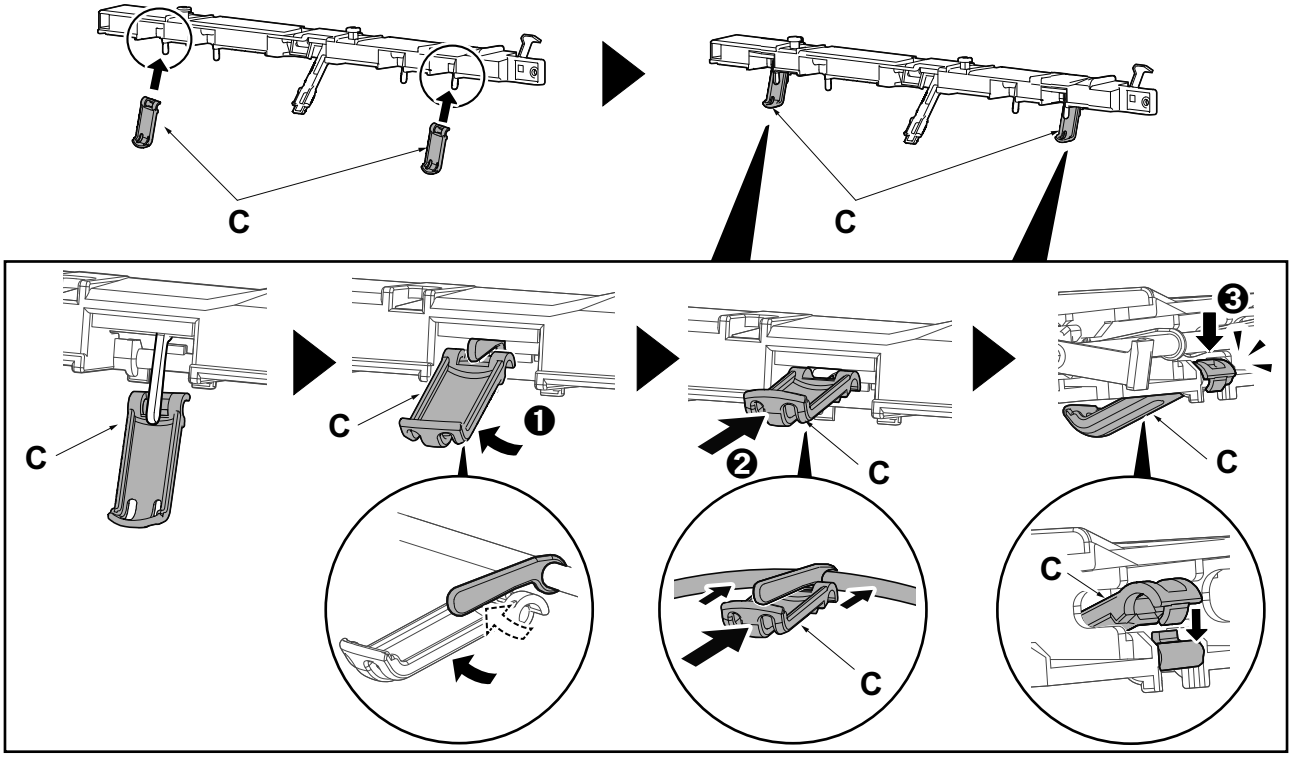

40/50/60/70ppm

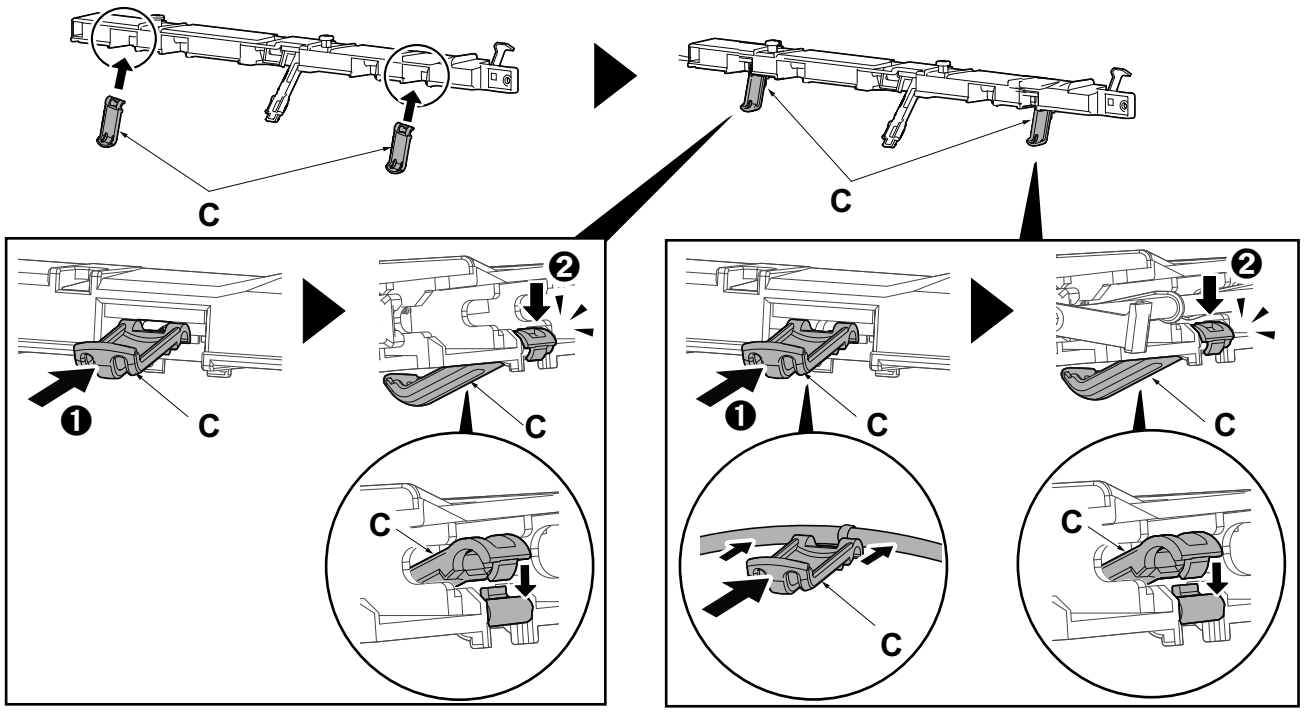

②-7

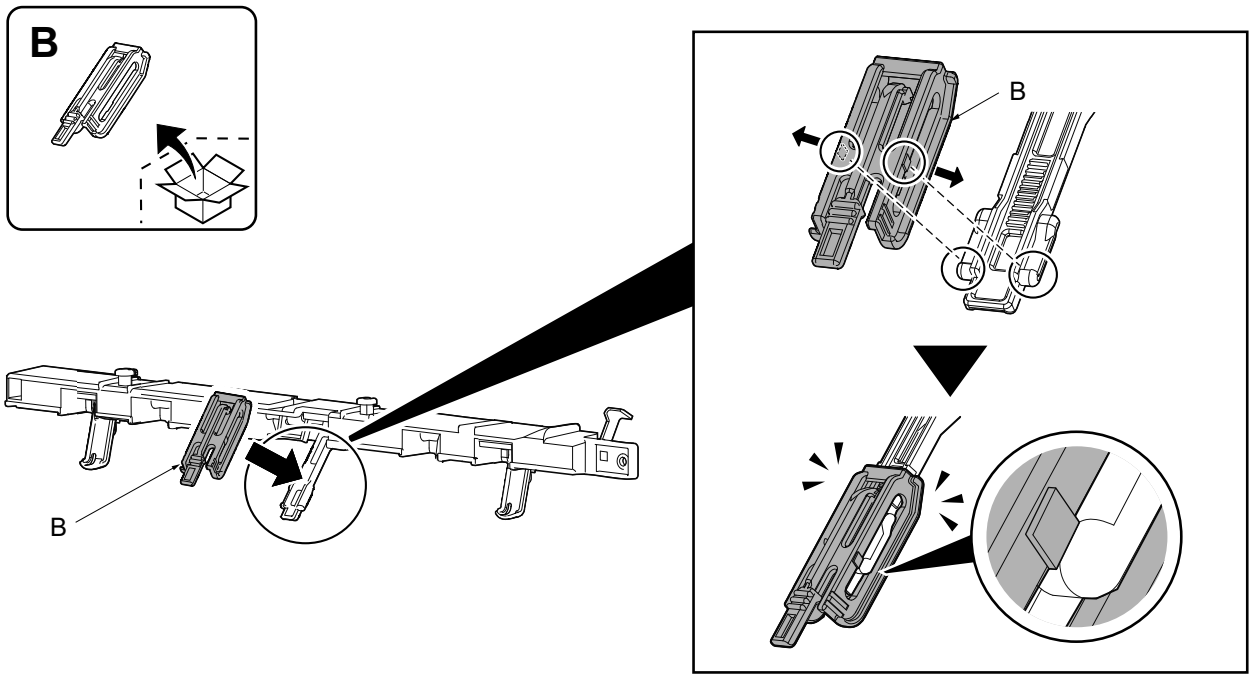

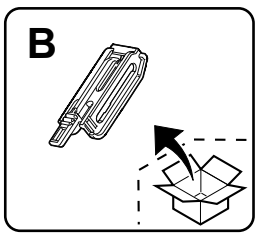

(EN) Japan specification (40/50/60/70ppm) only (100V)
(FR) Spécification pour le Japon (40/50/60/70 ppm) uniquement (100 V)
(ES) Especificaciones exclusivas para Japón (40/50/60/70 ppm) (100 V)
(DE) Technische Daten nur für Japan (40/50/60/70 Seiten/Minute) (100 V)
(IT) Specifiche solo per il Giappone (40/50/60/70 ppm) (100 V)
(ZHCN) 日本规格 (40/50/60/70ppm) (100V)
(KO) 일본 사양 (100V) 40/50/60/70ppm 제품에만 해당
(JA) 日本仕様 (100V) 40/50/60/70ppm のみ

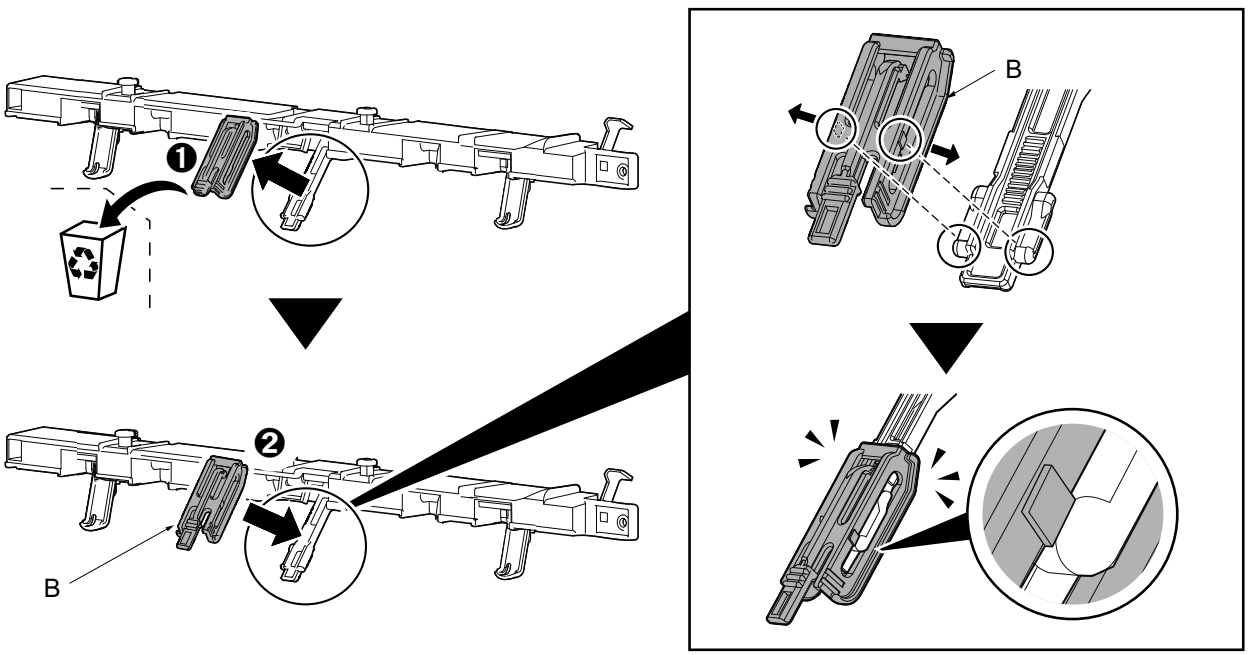

②-8

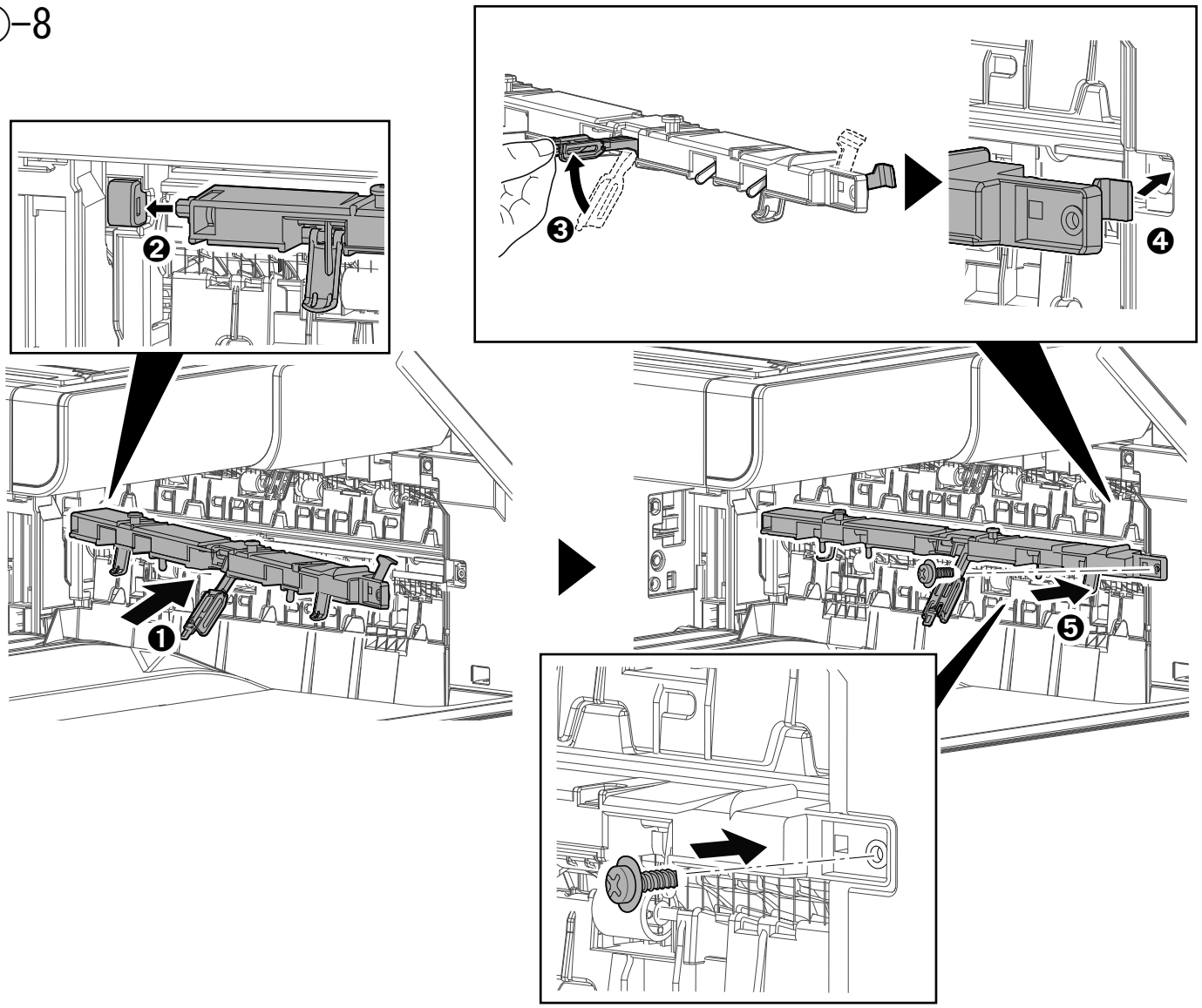

②-9

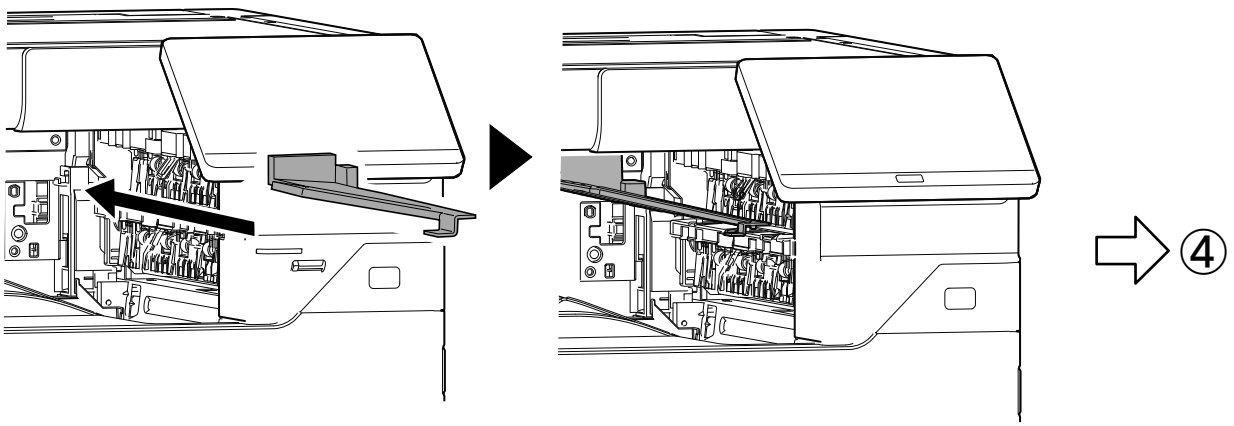

③-1

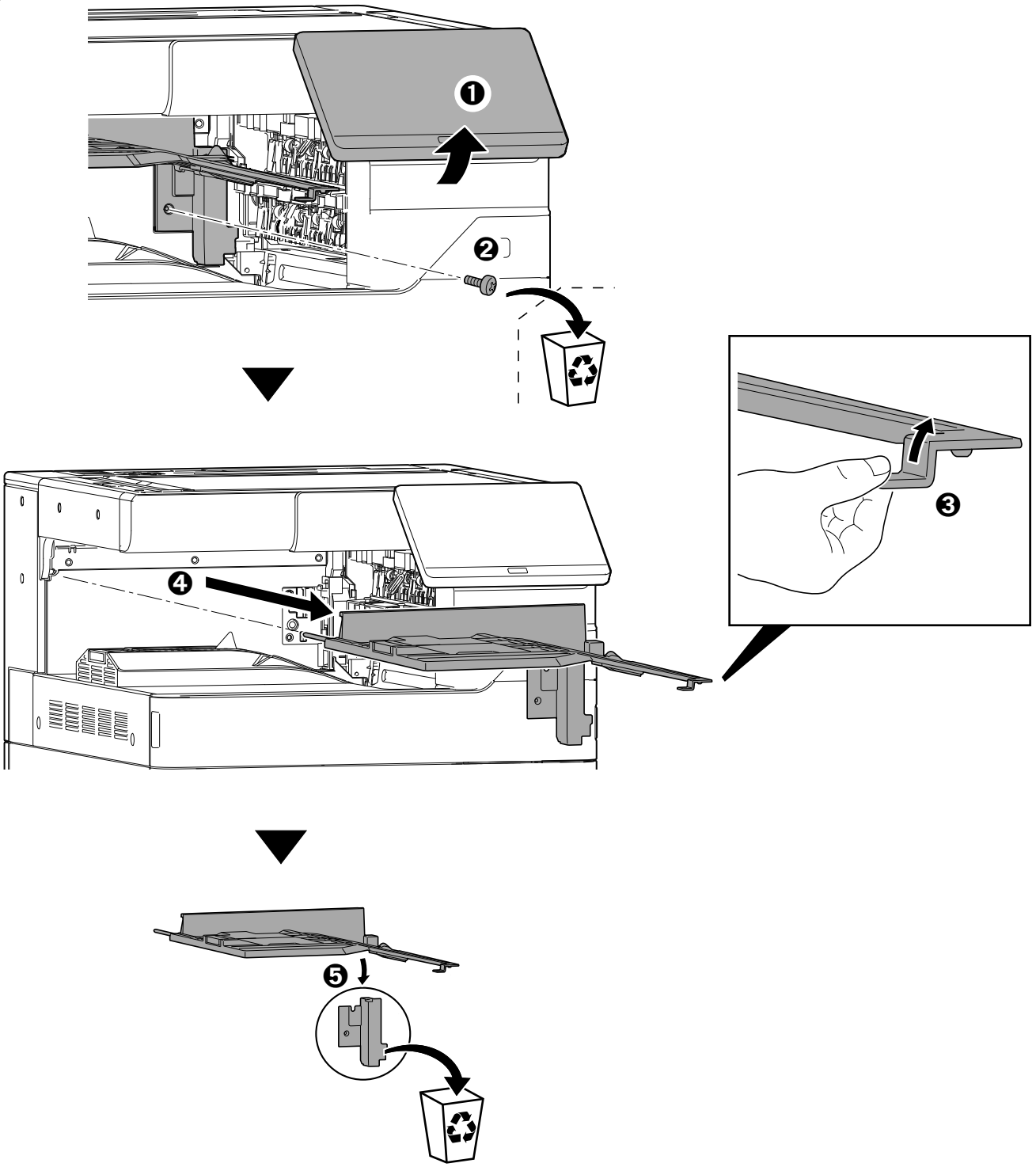

③-2

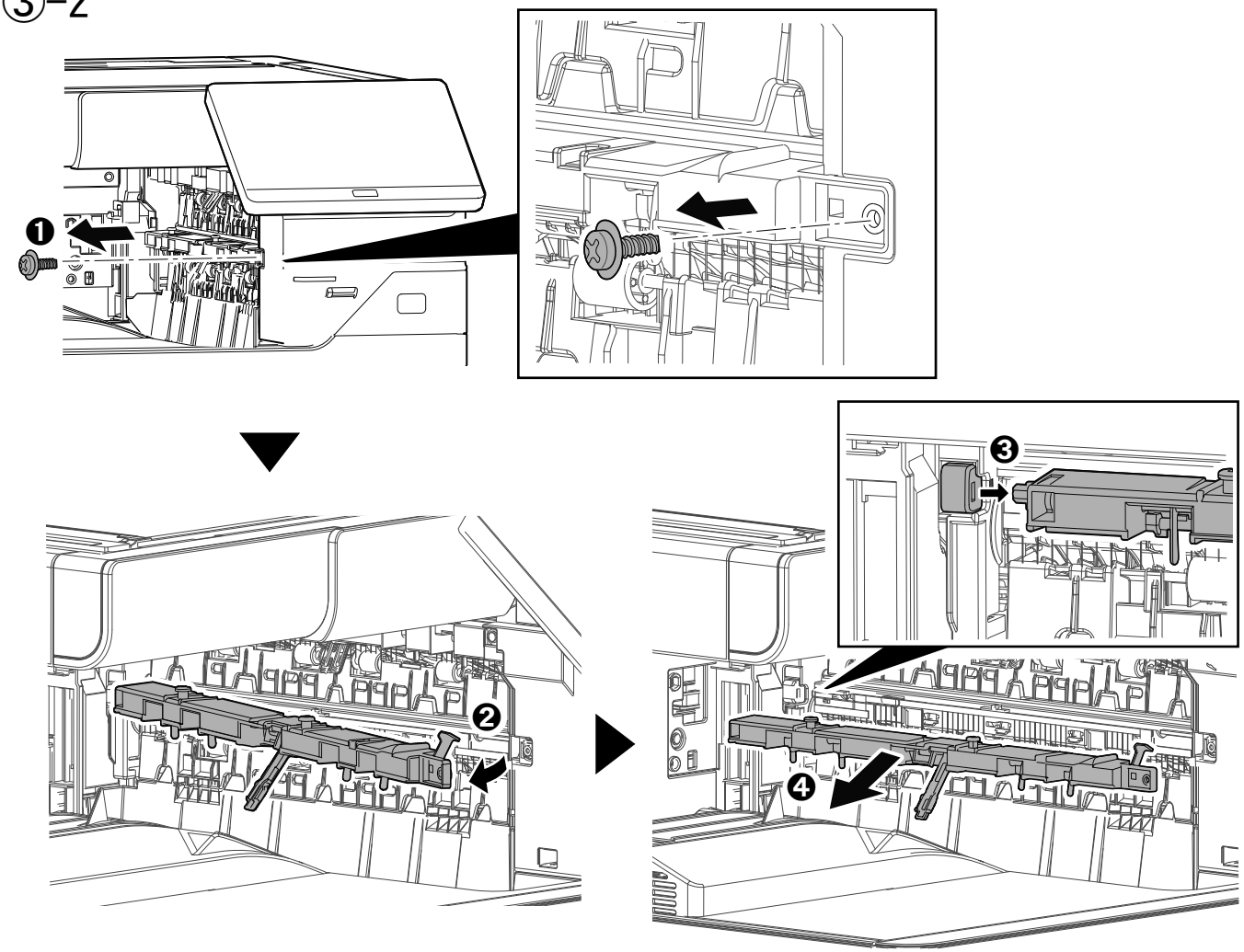

③-3

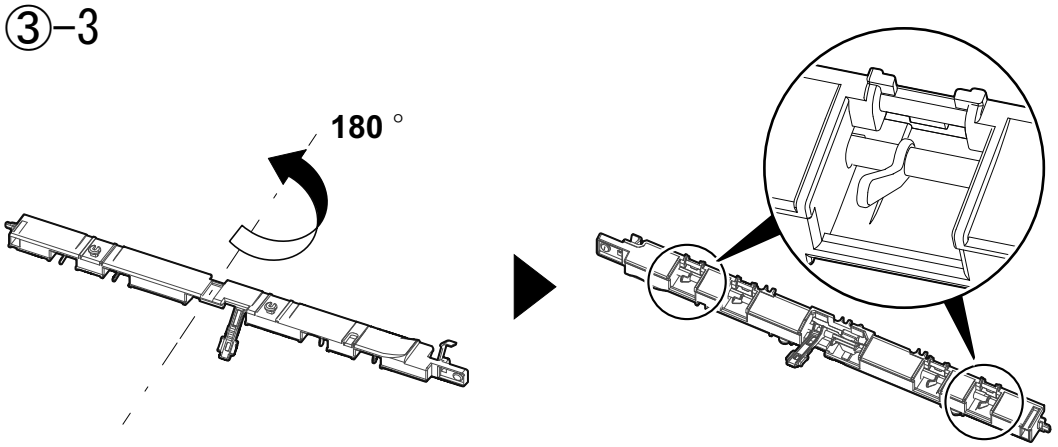

③-4

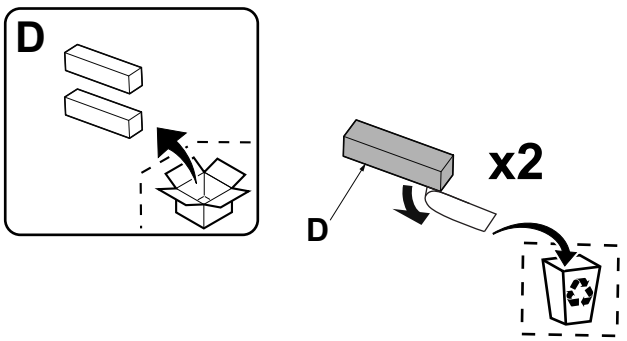

③-5 **25/35ppm**

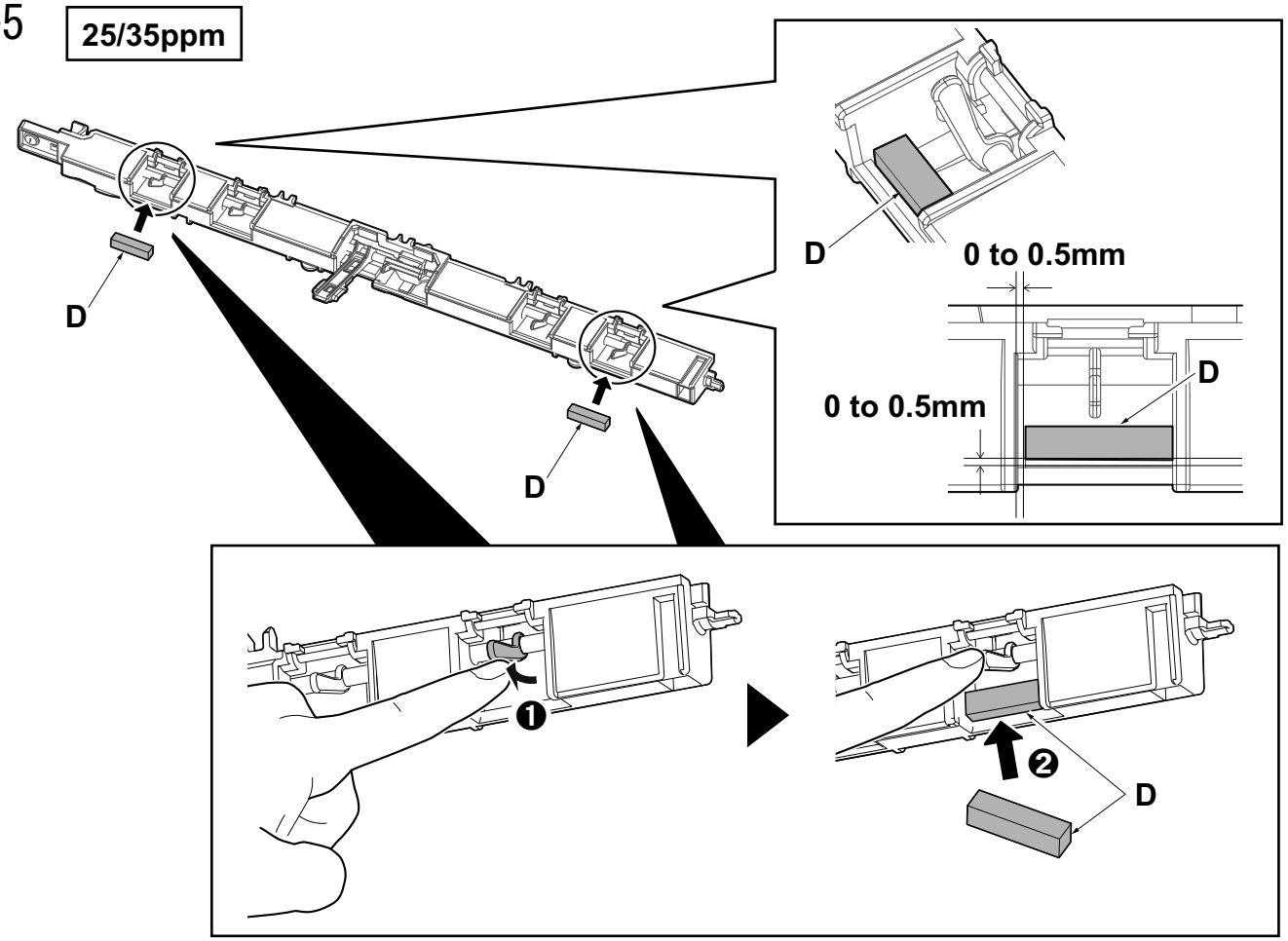

40/50/60/70ppm

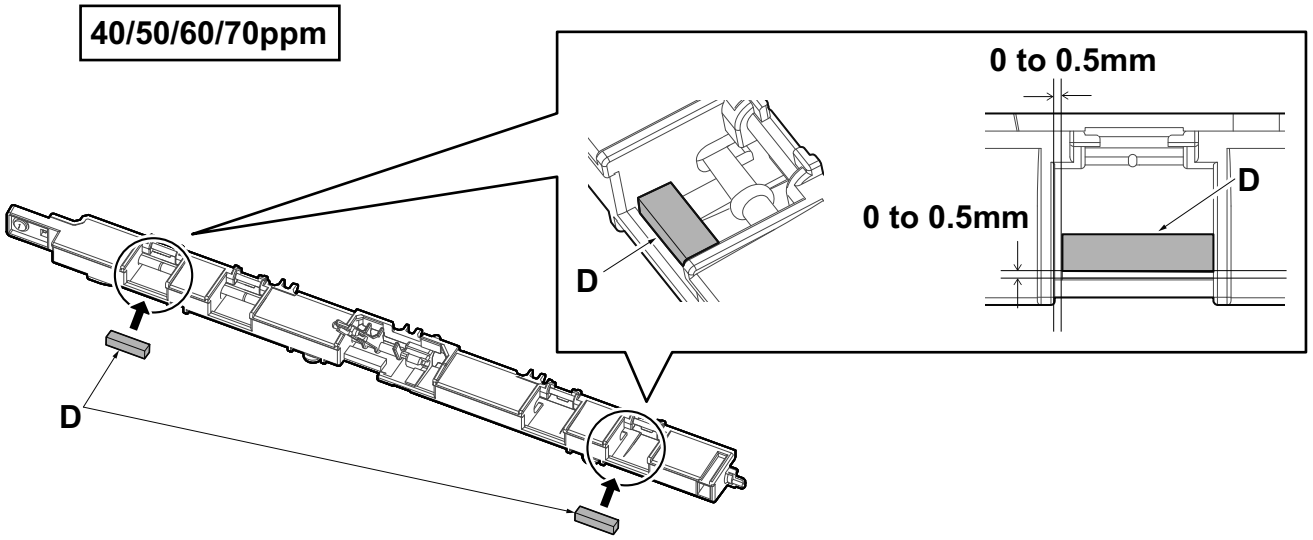

③-6

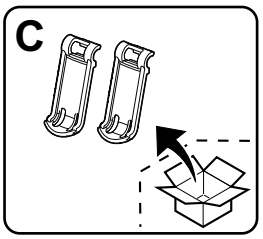

25/35ppm

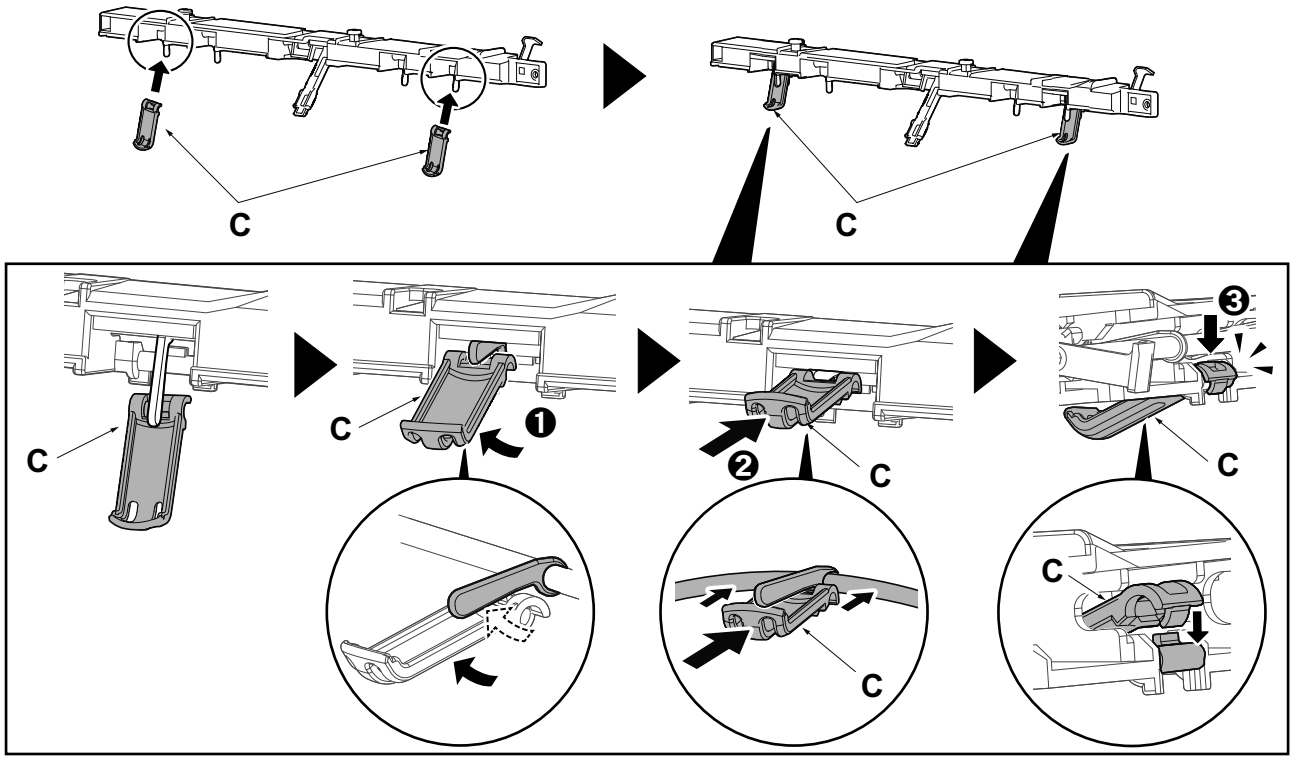

40/50/60/70ppm

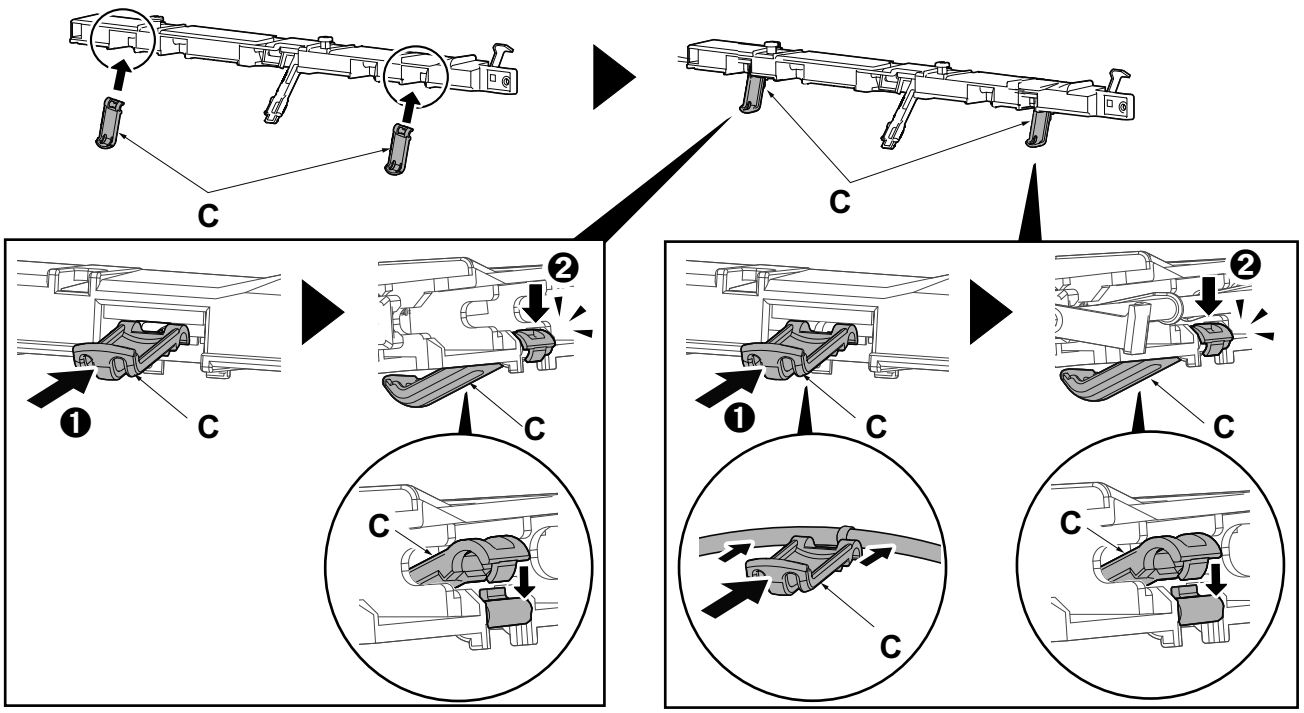

③-7

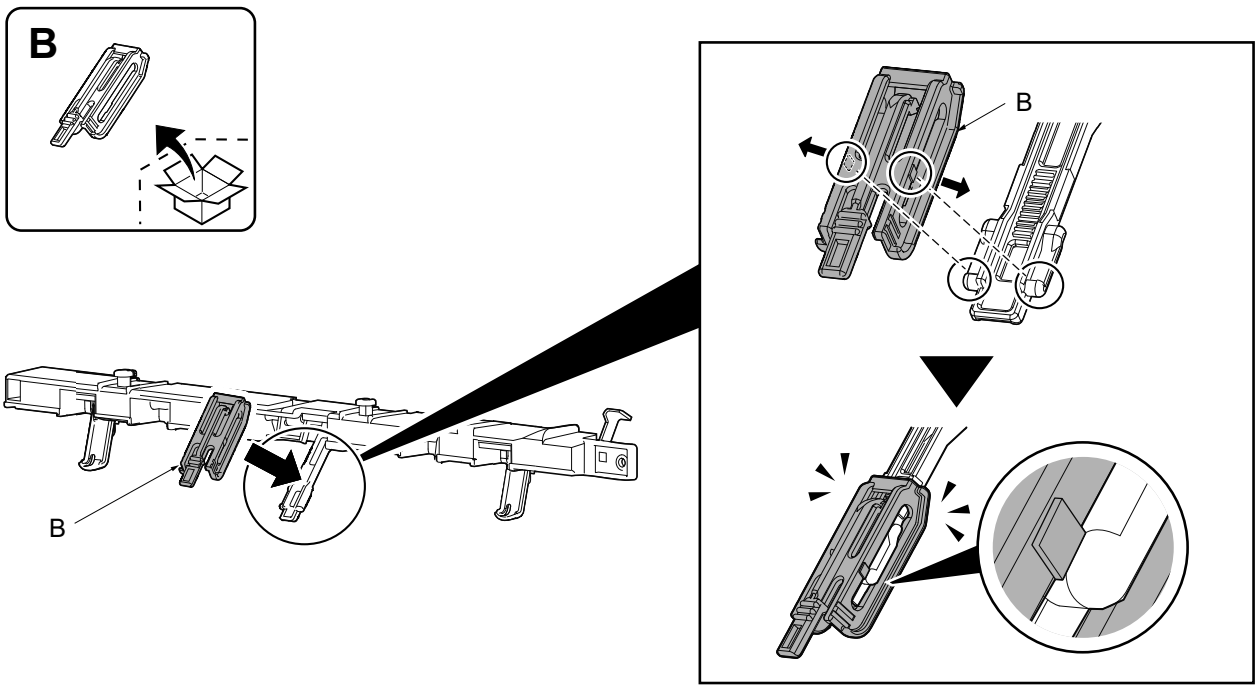

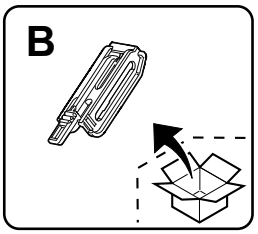

(EN) Japan specification (40/50/60/70ppm) only (100V)
(FR) Spécification pour le Japon (40/50/60/70 ppm) uniquement (100 V)
(ES) Especificaciones exclusivas para Japón (40/50/60/70 ppm) (100 V)
(DE) Technische Daten nur für Japan (40/50/60/70 Seiten/Minute) (100 V)
(IT) Specifiche solo per il Giappone (40/50/60/70 ppm) (100 V)
(ZHCN) 日本规格 (40/50/60/70ppm) (100V)
(KO) 일본 사양 (100V) 40/50/60/70ppm 제품에만 해당
(JA) 日本仕様 (100V) 40/50/60/70ppm のみ

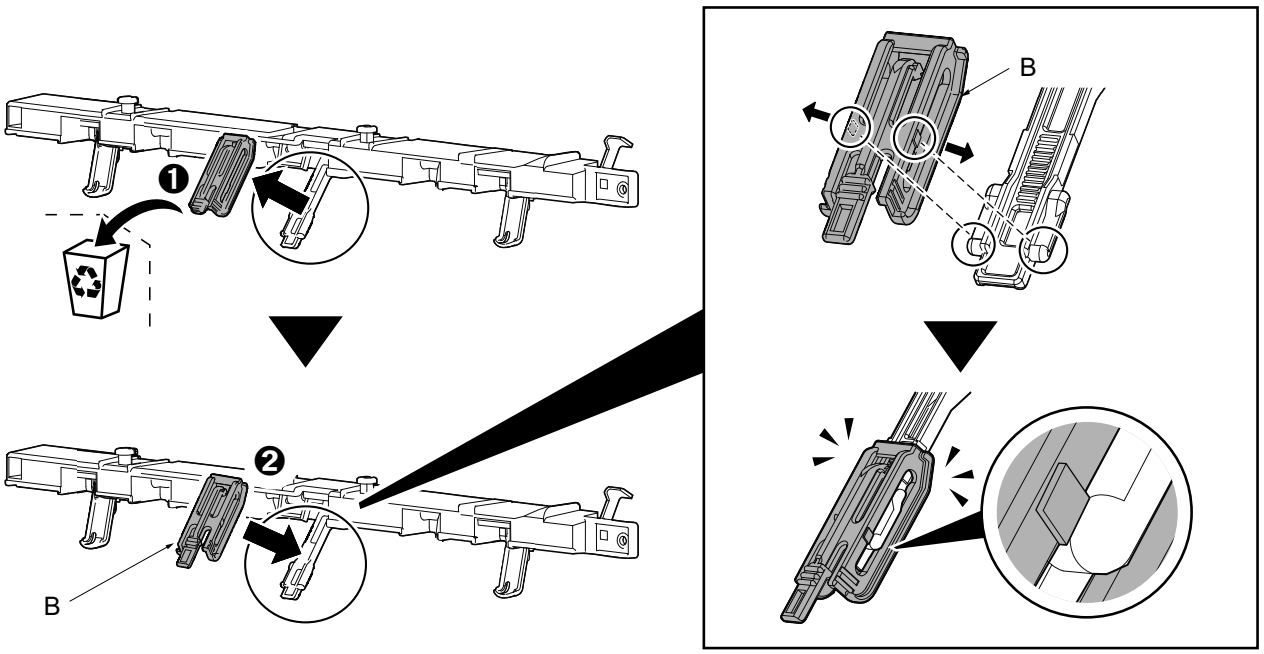

③-8

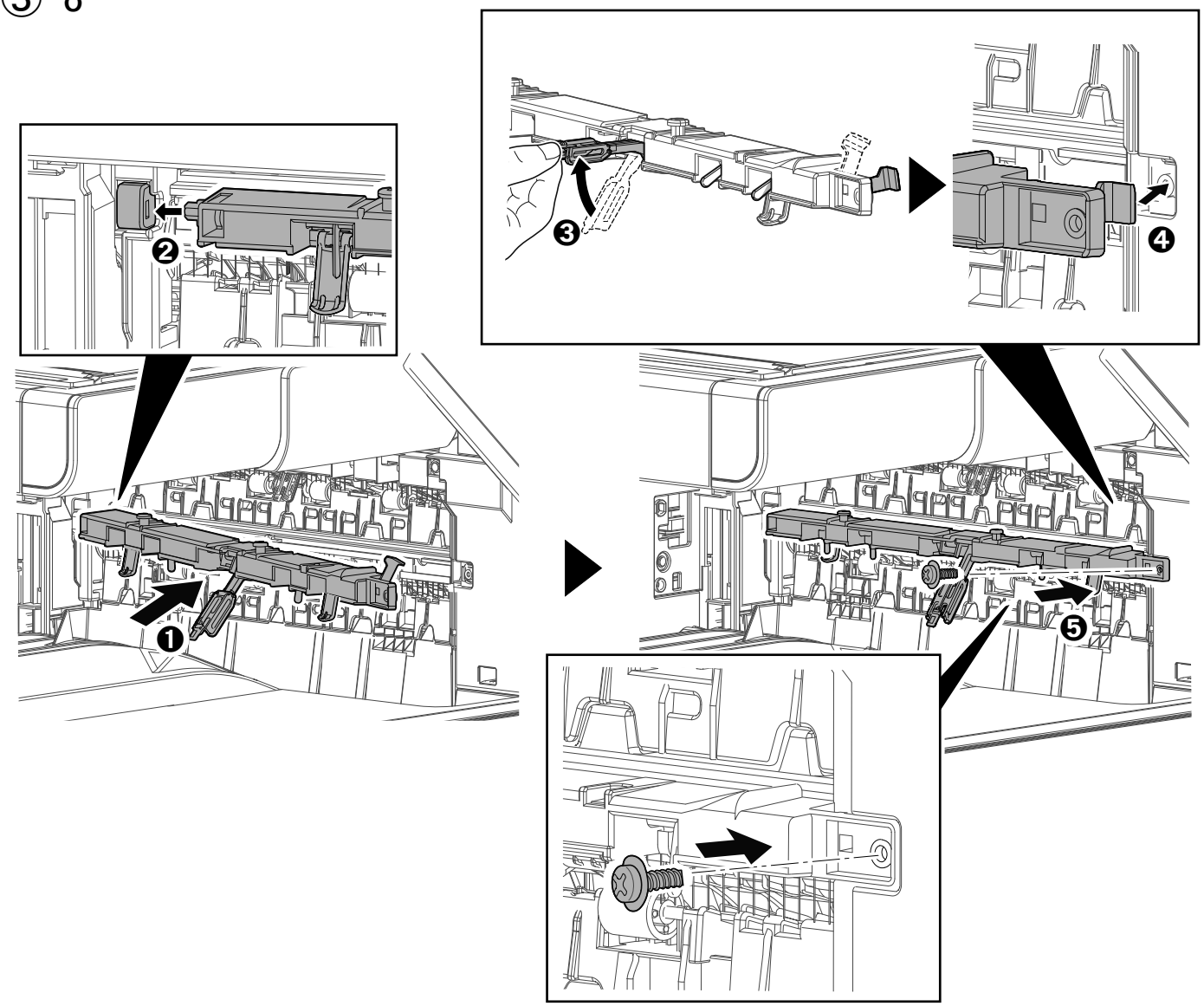

③-9

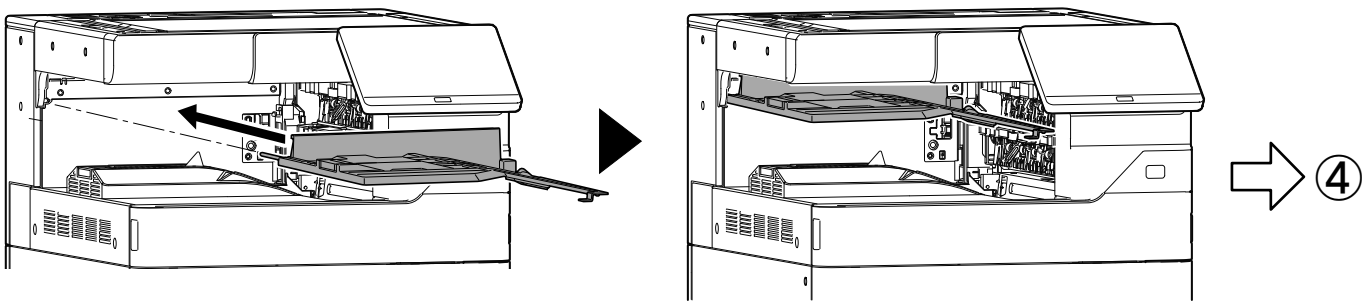

④

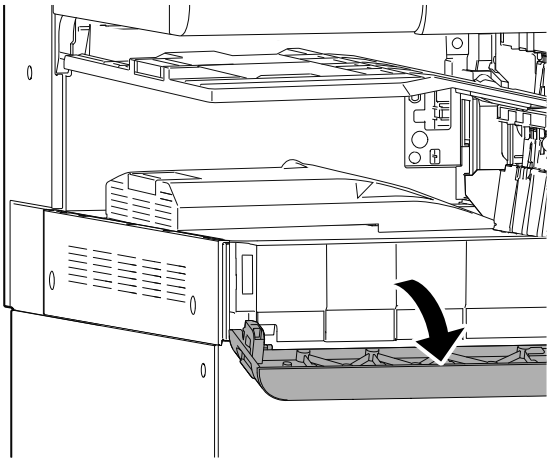

⑤

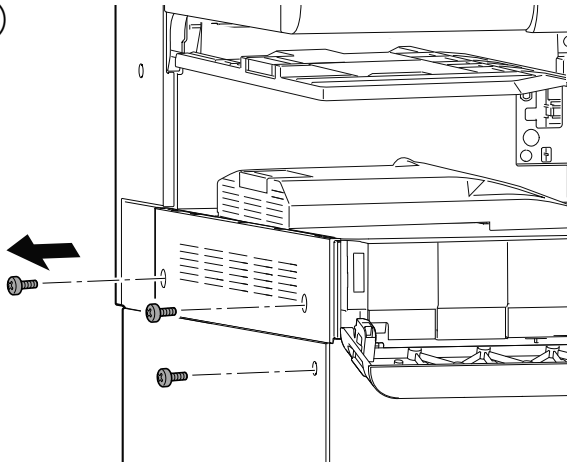

⑥

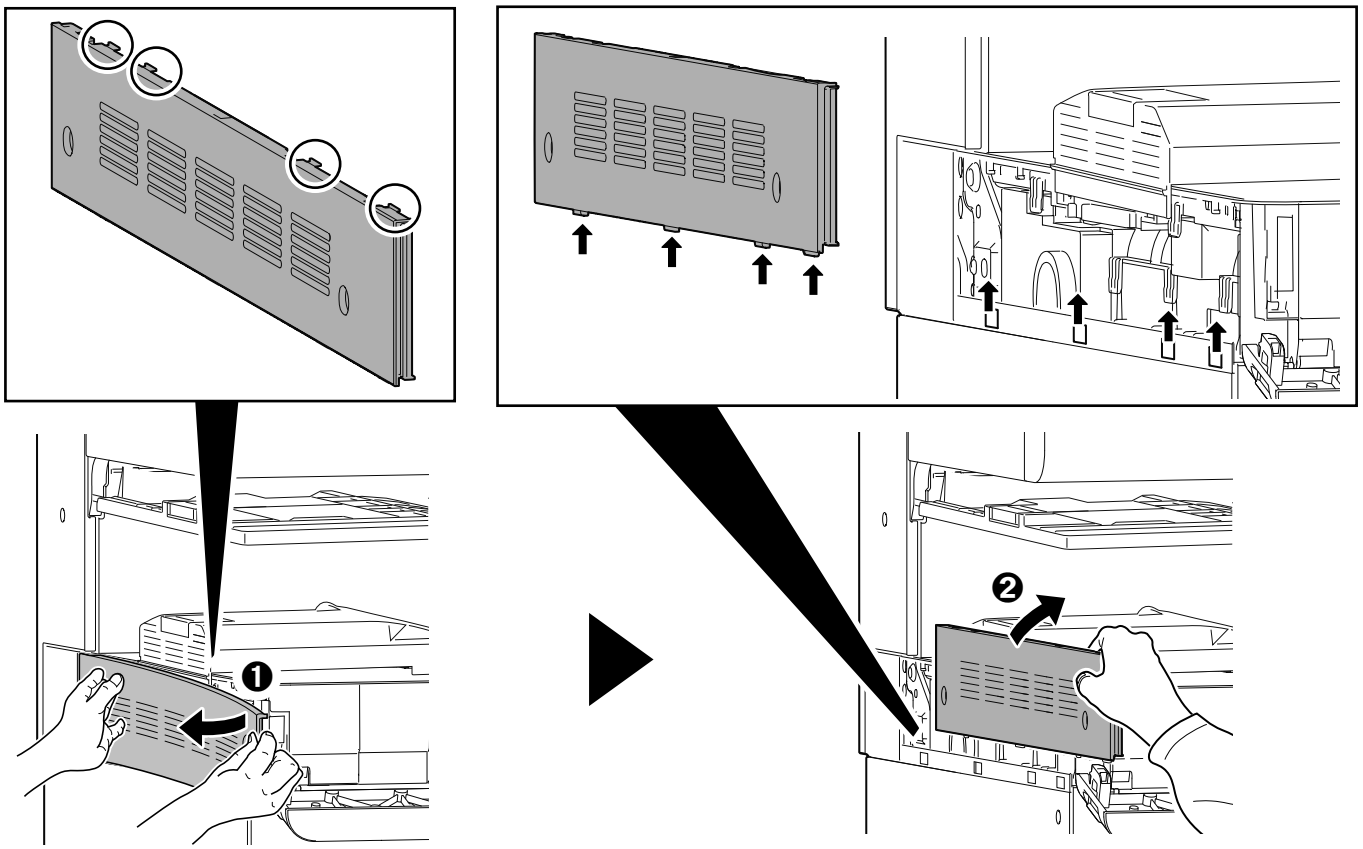

⑦

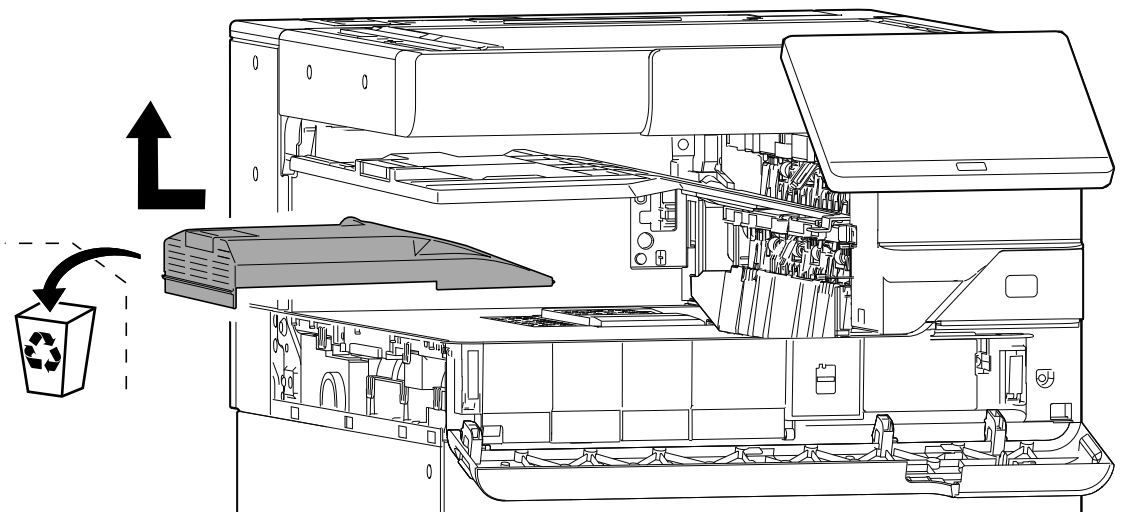

⑧

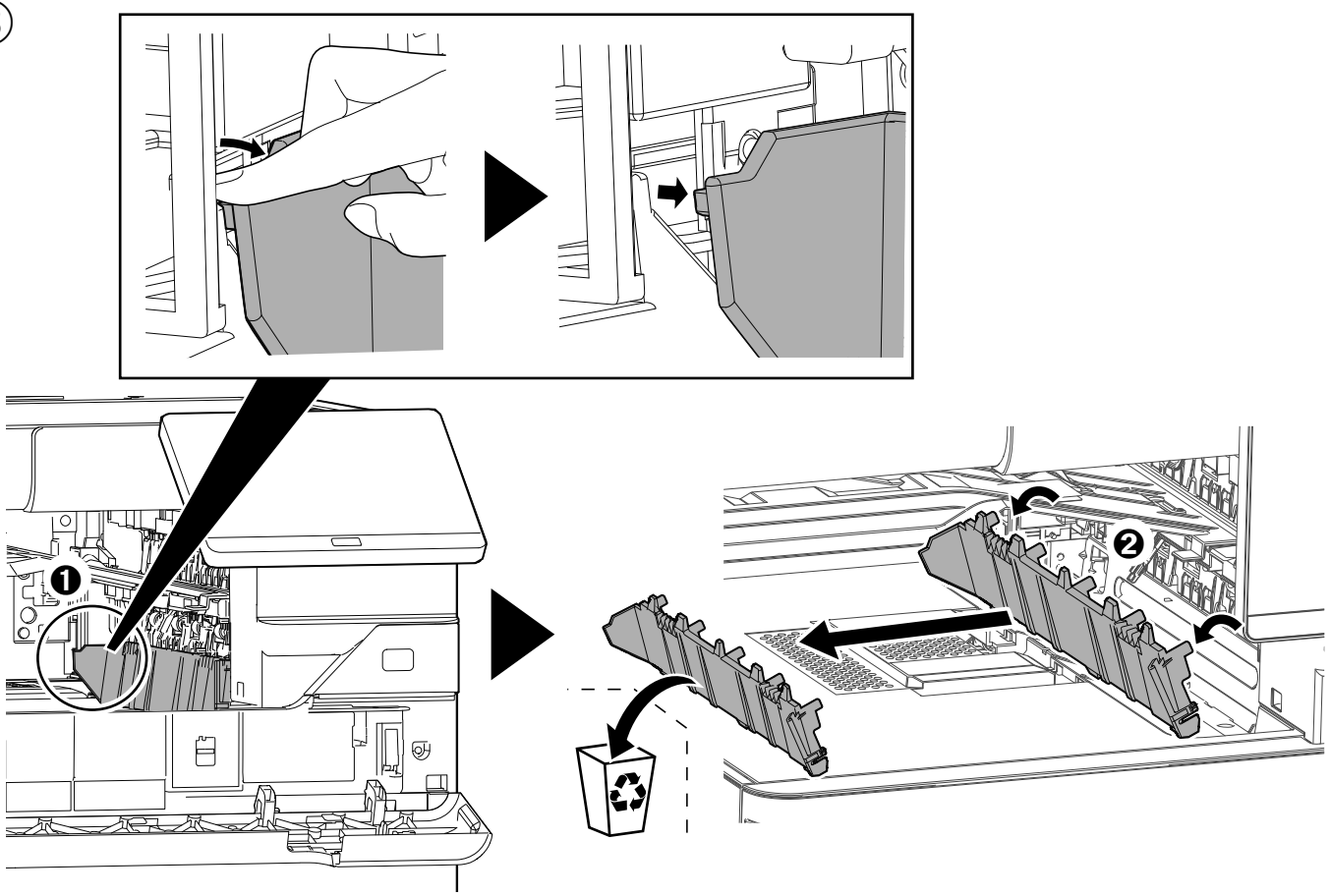

⑨

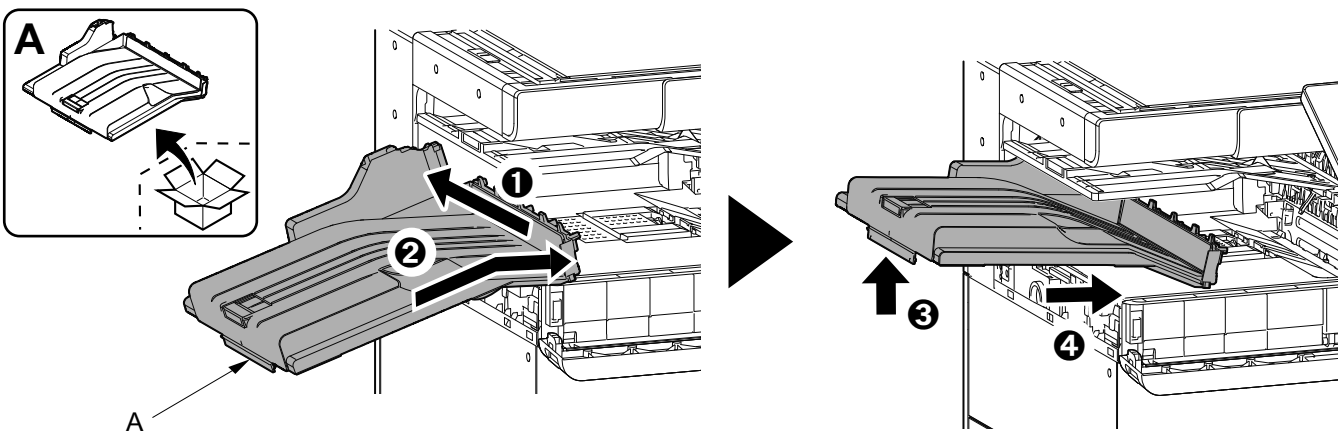

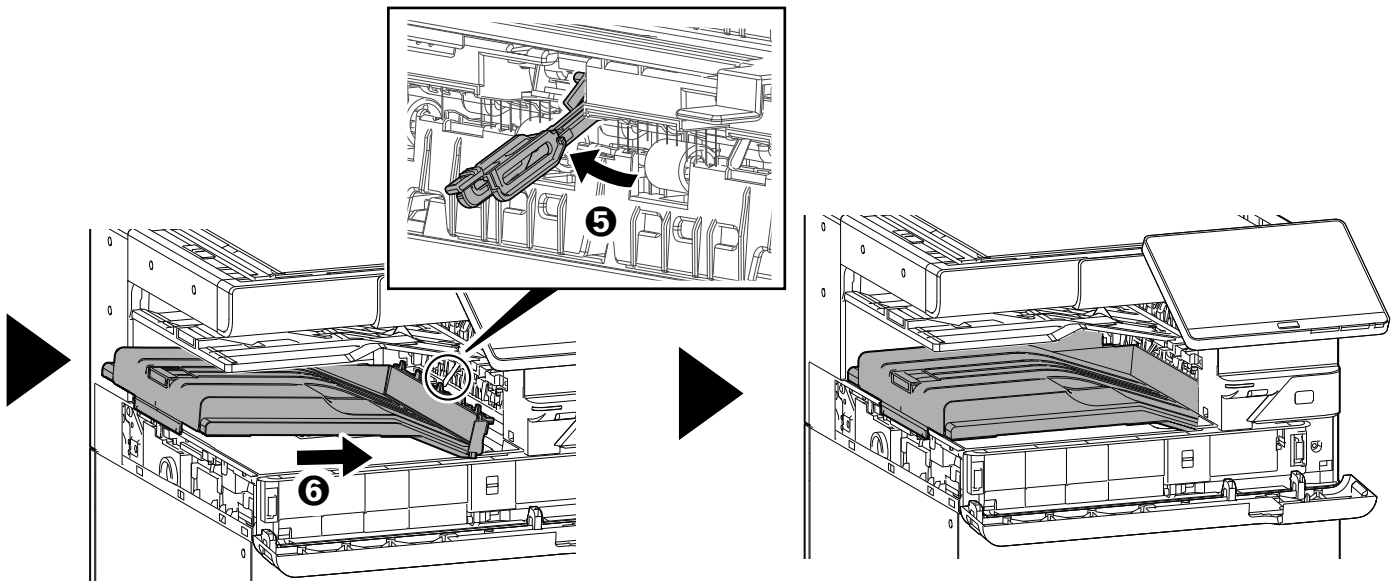

⑩

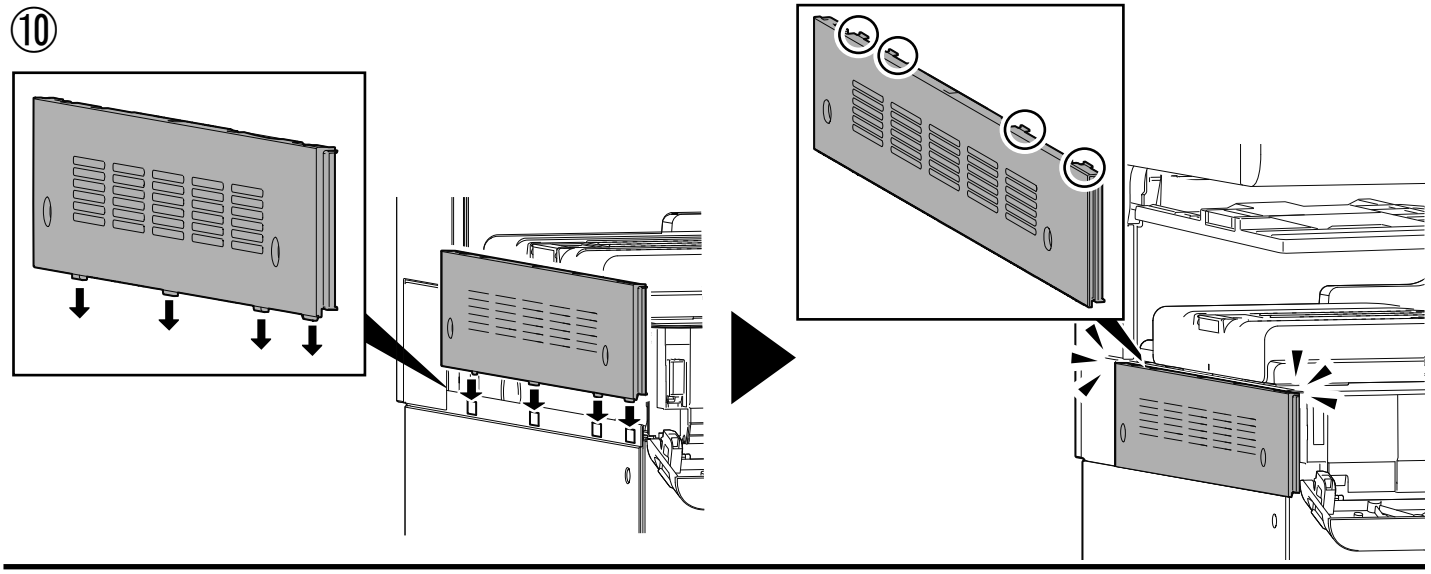

⑪

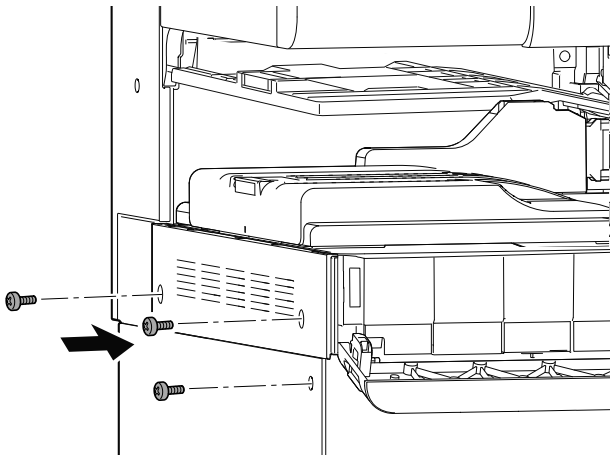

⑫

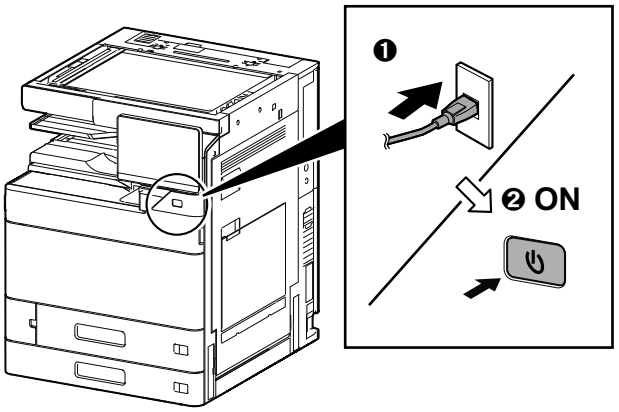

For Japan (100V)

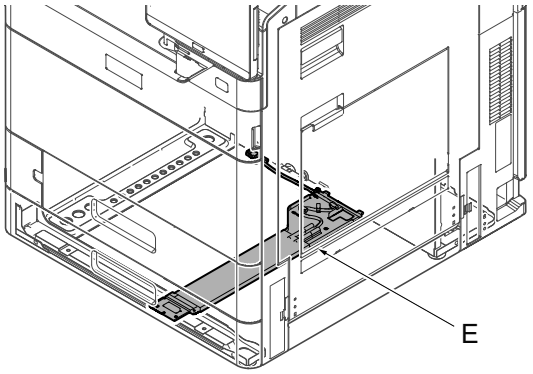

①

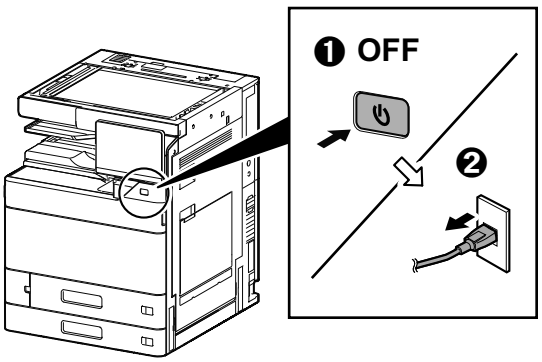

②

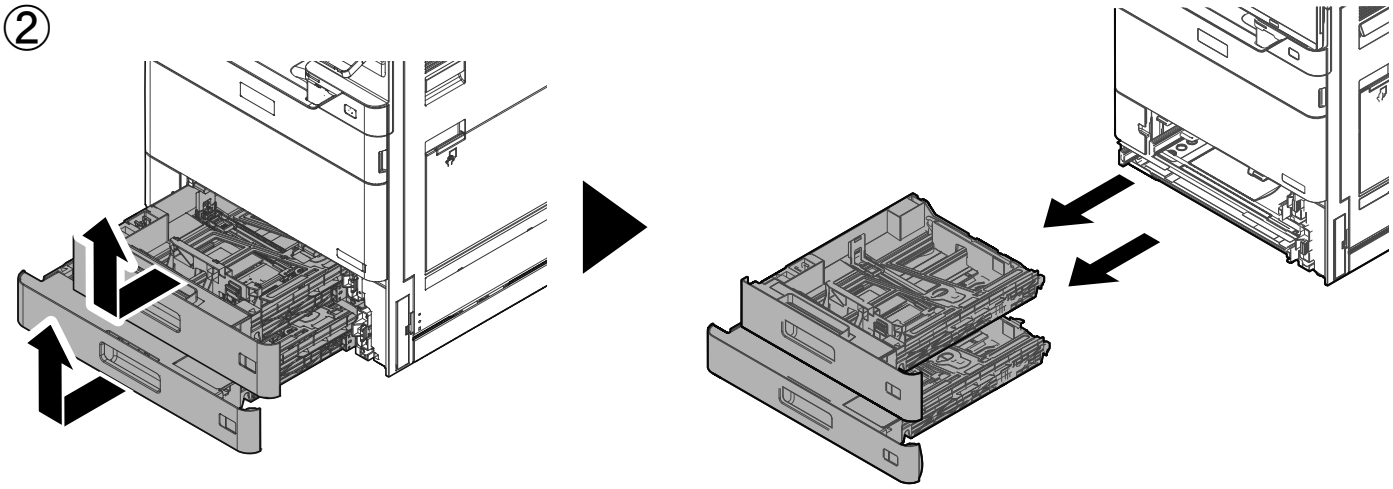

③

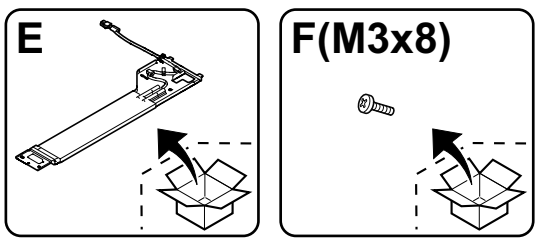

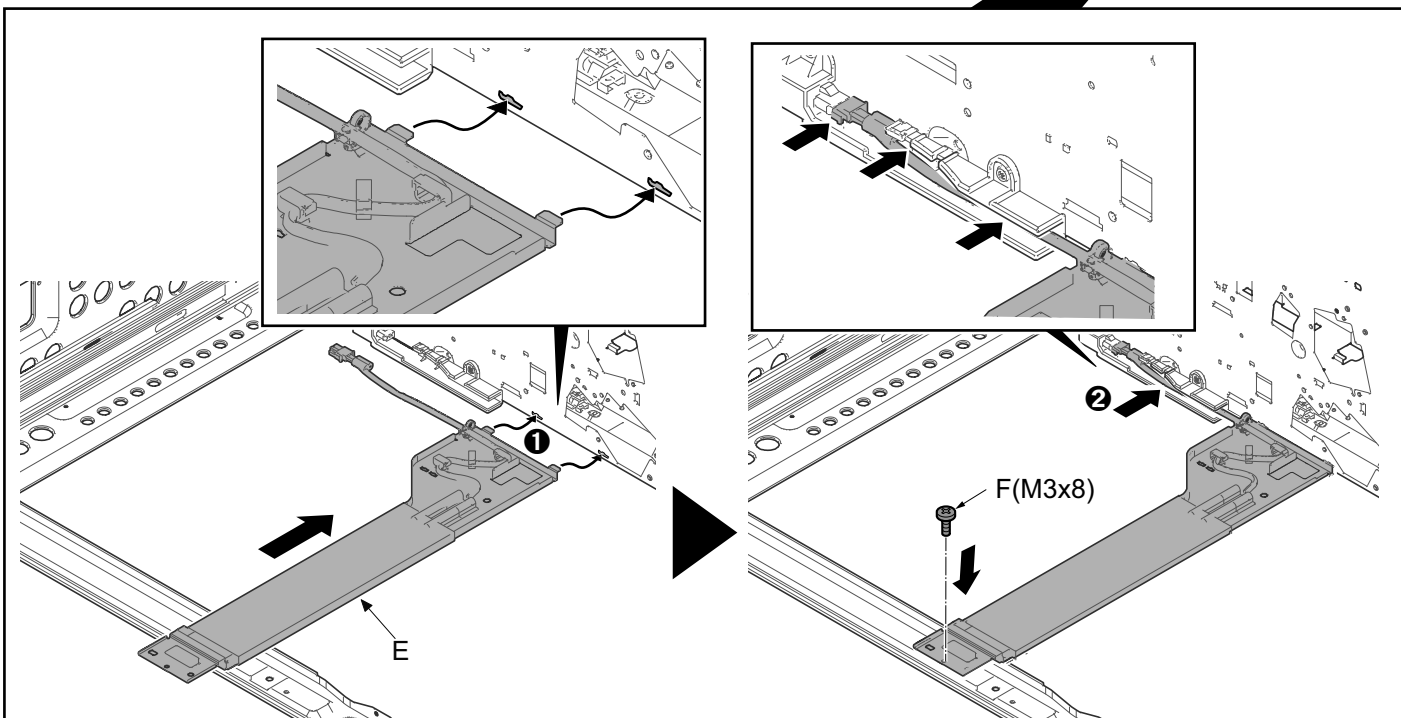

④

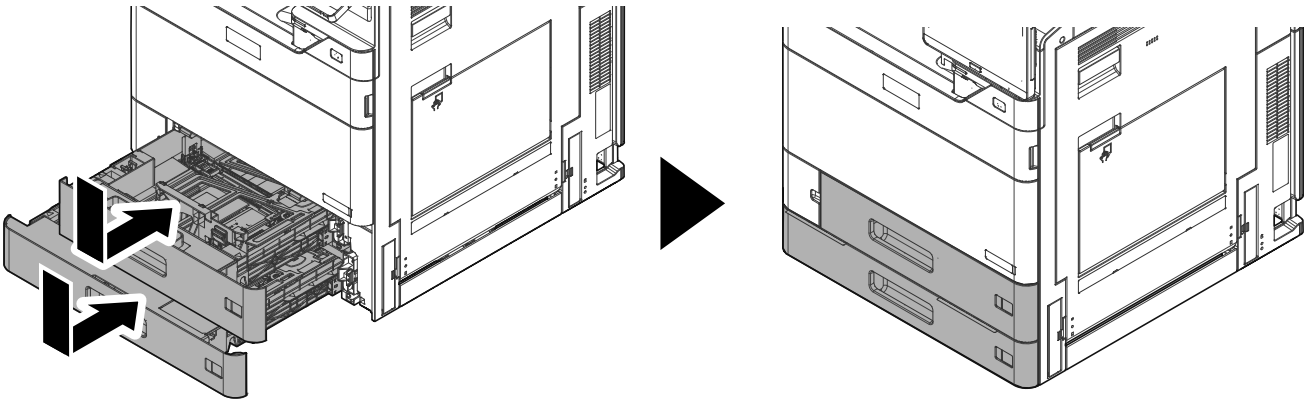

⑤

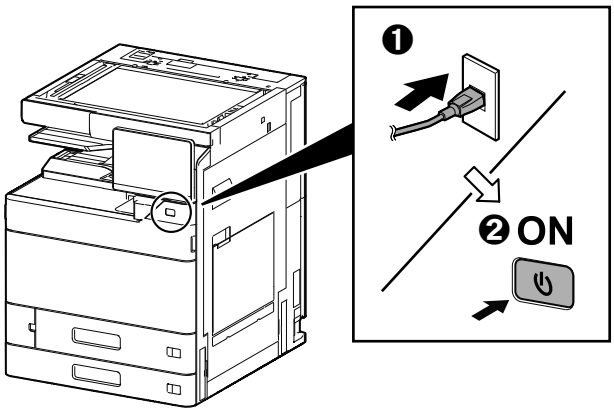

⑥

(EN) Maintenance mode U327 (Set Cass Heater > [Mode2])
(FR) Mode maintenance U327 (Set Cass Heater > [Mode2])
(ES) Modo de mantenimiento U327 (Set Cass Heater > [Mode2])
(DE) Wartungsmodus U327 (Set Cass Heater > [Mode2])
(IT) Modalità di manutenzione U327 (Set Cass Heater > [Mode2])
(ZHCN) 保养模式 U327 (Set Cass Heater > [Mode2])
(KO) 메인터넌스 모드 U327 (Set Cass Heater > [Mode2])
(JA) メンテナンスモード U327 (Set Cass Heater > [Mode2])

(EN) Do not unplug the power cord of the main unit when the cassette heater is installed. The cassette heater turns on once the turning the power switch of the main unit off.
(FR) Ne débranchez pas le câble d'alimentation de l'unité principale si le radiateur du magasin est installé. Le radiateur du magasin s'allume dès l'arrêt de l'alimentation de l'unité principale.
(ES) No desenchufe el cable de alimentación de la unidad principal si está instalado el calentador del depósito. El calentador del depósito se enciende una vez que se apaga la unidad principal con el interruptor de encendido y apagado.
(DE) Trennen Sie das Gerät nicht vom Netz, wenn Sie die Kassettenheizung anschließen. Die Kassettenheizung schaltet sich ein, sobald das Gerät ausgeschaltet wird.
(IT) Non scollegare il cavo dell'alimentazione dell'unità principale se è installato il riscaldatore cassetto. Il riscaldatore cassetto si accende quando si aziona l'interruttore dell'unità principale per spegnerla.
(ZHCN) 安装纸盒加热器时，请勿拔下主设备的电源线。当关闭主机的电源开关，纸盒加热器就通电。
(KO) 카세트 히터가 설치가 설치된 경우 본체의 전원 코드를 뽑지 마십시오. 본체의 전원 스위치를 끄면 카세트 히터가 켜집니다.
(JA) カセットヒーターを装着した場合は、コンセントを抜かないでください。カセットヒーターは、本体電源スイッチ OFF で通電します。

For Japan (100V)

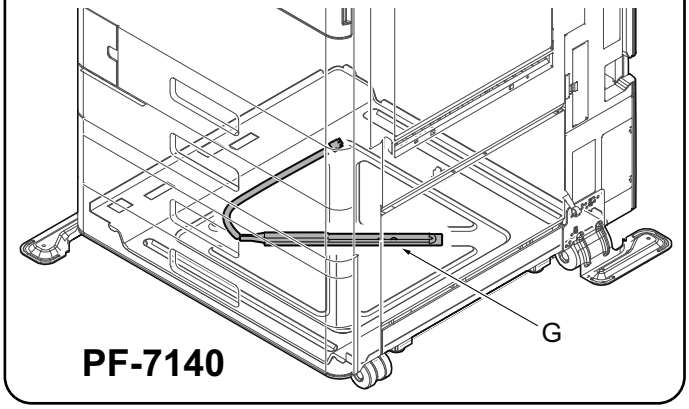

PF-7140

①

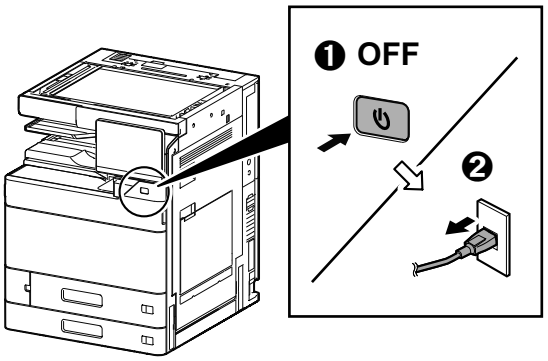

②

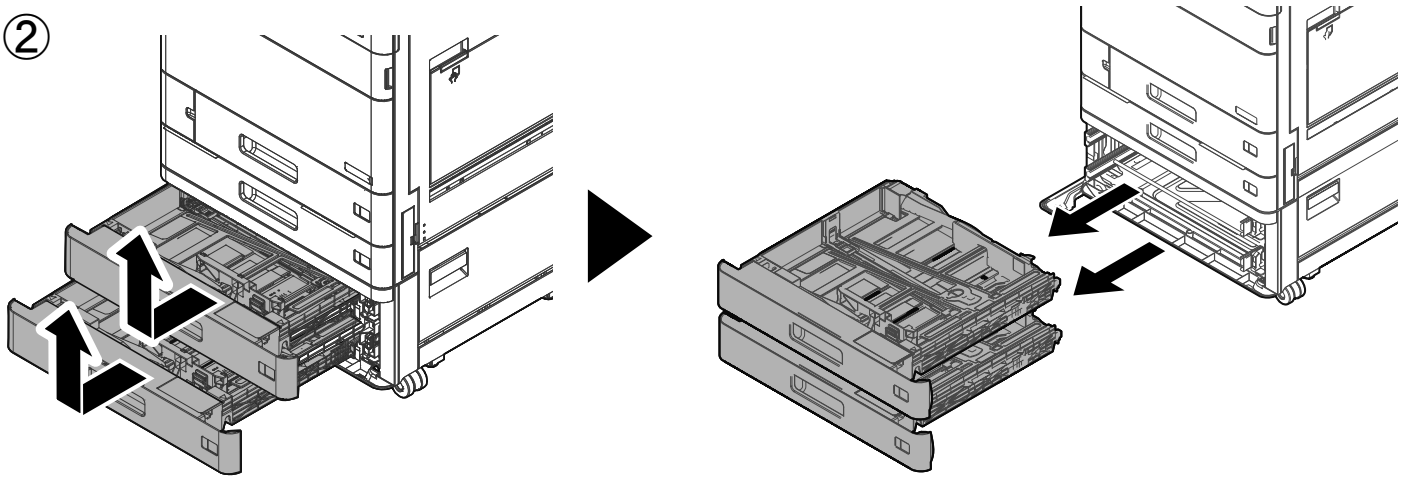

③

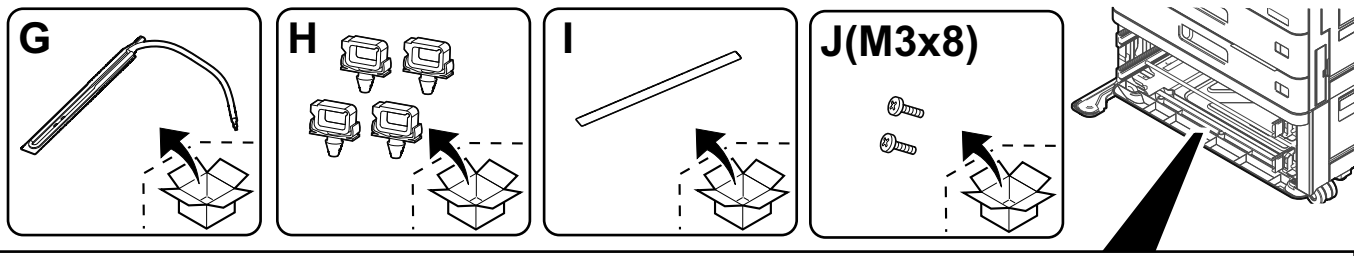

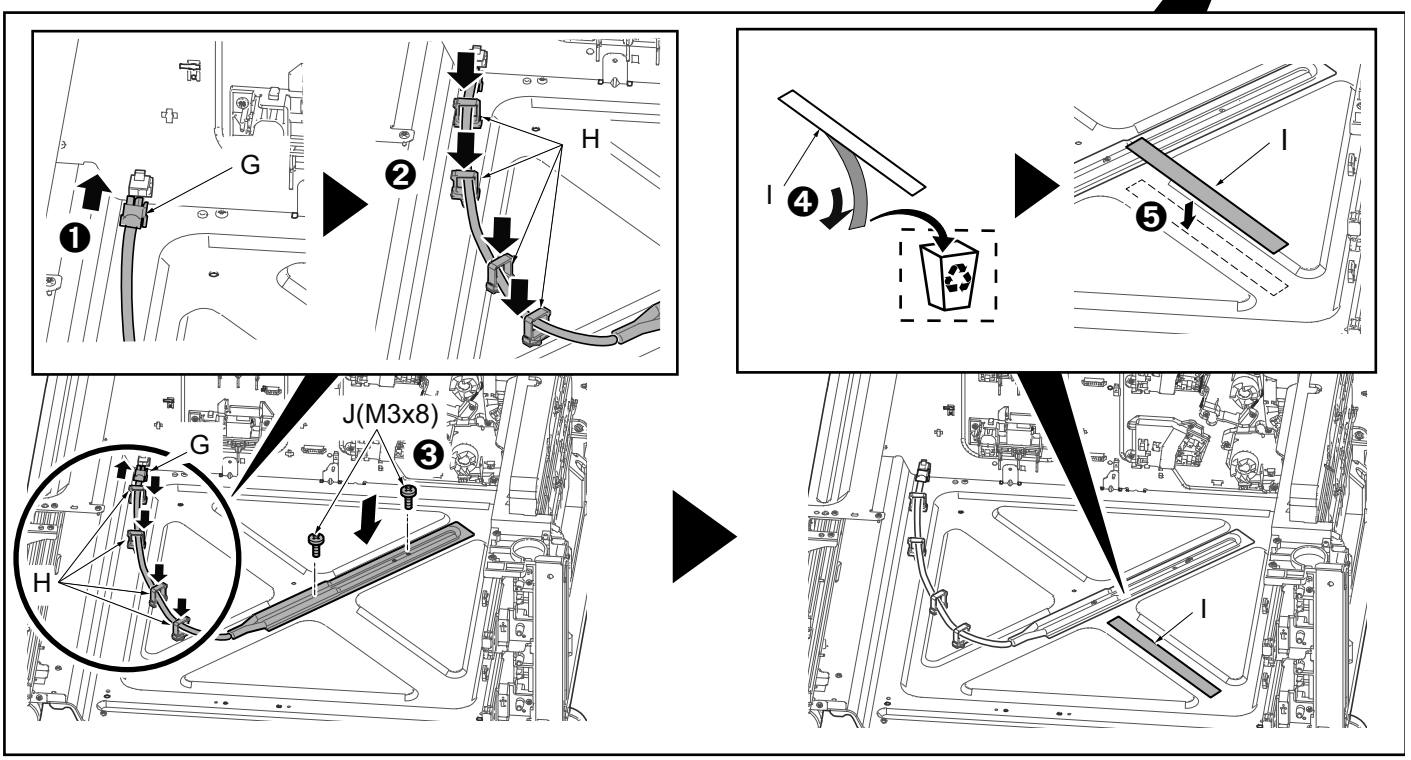

④

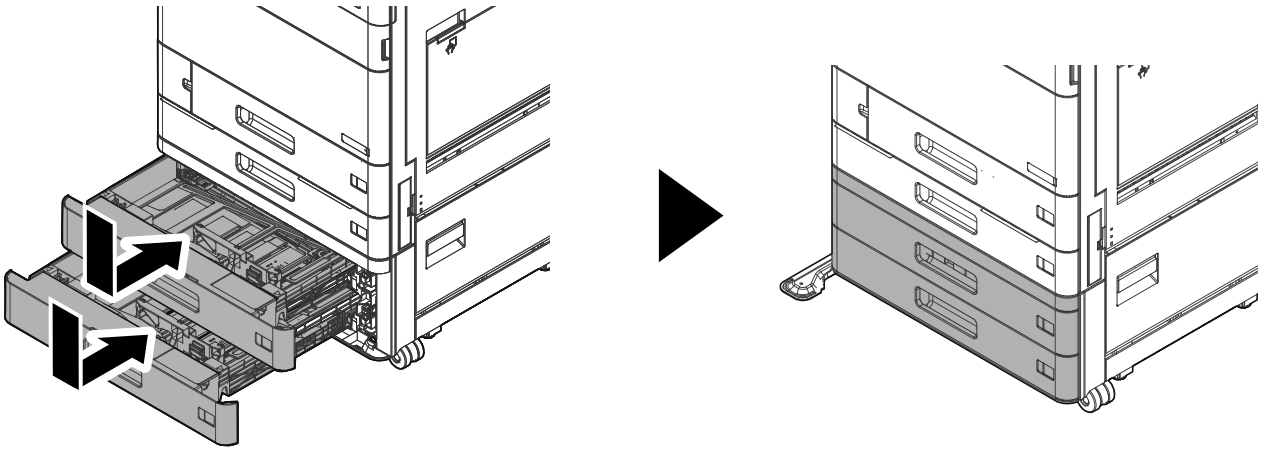

⑤

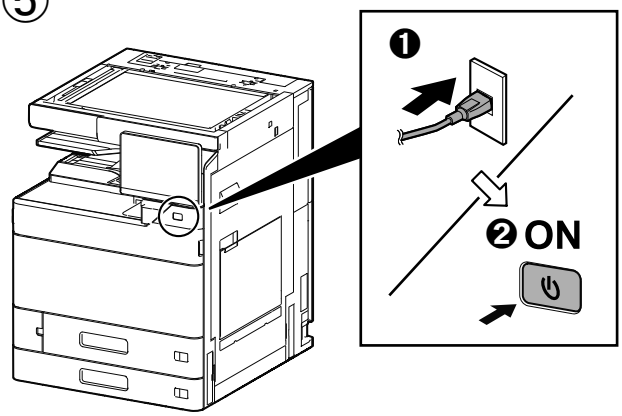

⑥

(EN) Maintenance mode U327 (Set Cass Heater > [Mode2])
(FR) Mode maintenance U327 (Set Cass Heater > [Mode2])
(ES) Modo de mantenimiento U327 (Set Cass Heater > [Mode2])
(DE) Wartungsmodus U327 (Set Cass Heater > [Mode2])
(IT) Modalità di manutenzione U327 (Set Cass Heater > [Mode2])
(ZHCN) 保养模式 U327 (Set Cass Heater > [Mode2])
(KO) 메인터넌스 모드 U327 (Set Cass Heater > [Mode2])
(JA) メンテナンスモード U327 (Set Cass Heater > [Mode2])

(EN) Do not unplug the power cord of the main unit when the cassette heater is installed. The cassette heater turns on once the turning the power switch of the main unit off.
(FR) Ne débranchez pas le câble d'alimentation de l'unité principale si le radiateur du magasin est installé. Le radiateur du magasin s'allume dès l'arrêt de l'alimentation de l'unité principale.
(ES) No desenchufe el cable de alimentación de la unidad principal si está instalado el calentador del depósito. El calentador del depósito se enciende una vez que se apaga la unidad principal con el interruptor de encendido y apagado.
(DE) Trennen Sie das Gerät nicht vom Netz, wenn Sie die Kassettenheizung anschließen. Die Kassettenheizung schaltet sich ein, sobald das Gerät ausgeschaltet wird.
(IT) Non scollegare il cavo dell'alimentazione dell'unità principale se è installato il riscaldatore cassetto. Il riscaldatore cassetto si accende quando si aziona l'interruttore dell'unità principale per spegnerla.
(ZHCN) 安装纸盒加热器时，请勿拔下主设备的电源线。当关闭主机的电源开关，纸盒加热器就通电。
(KO) 카세트 히터가 설치가 설치된 경우 본체의 전원 코드를 뽑지 마십시오. 본체의 전원 스위치를 끄면 카세트 히터가 켜집니다.
(JA) カセットヒーターを装着した場合は、コンセントを抜かないでください。カセットヒーターは、本体電源スイッチ OFF で通電します。

For Japan (100V)

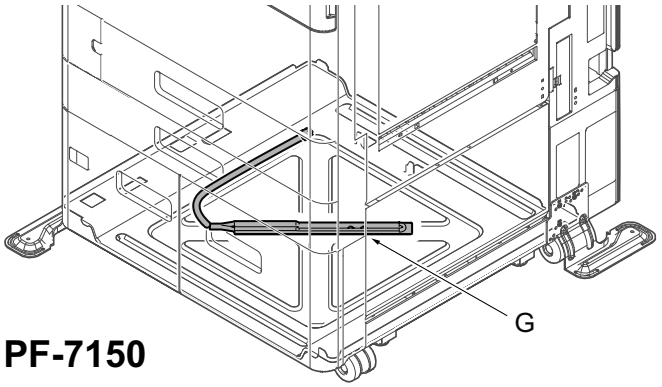

PF-7150

①

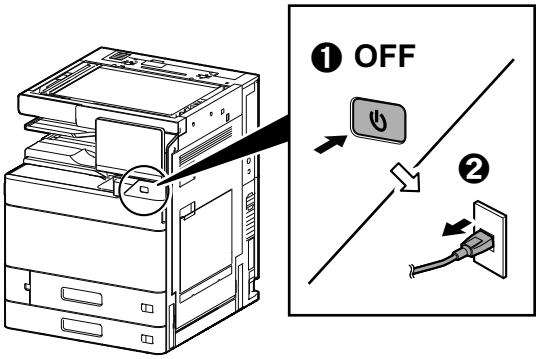

②

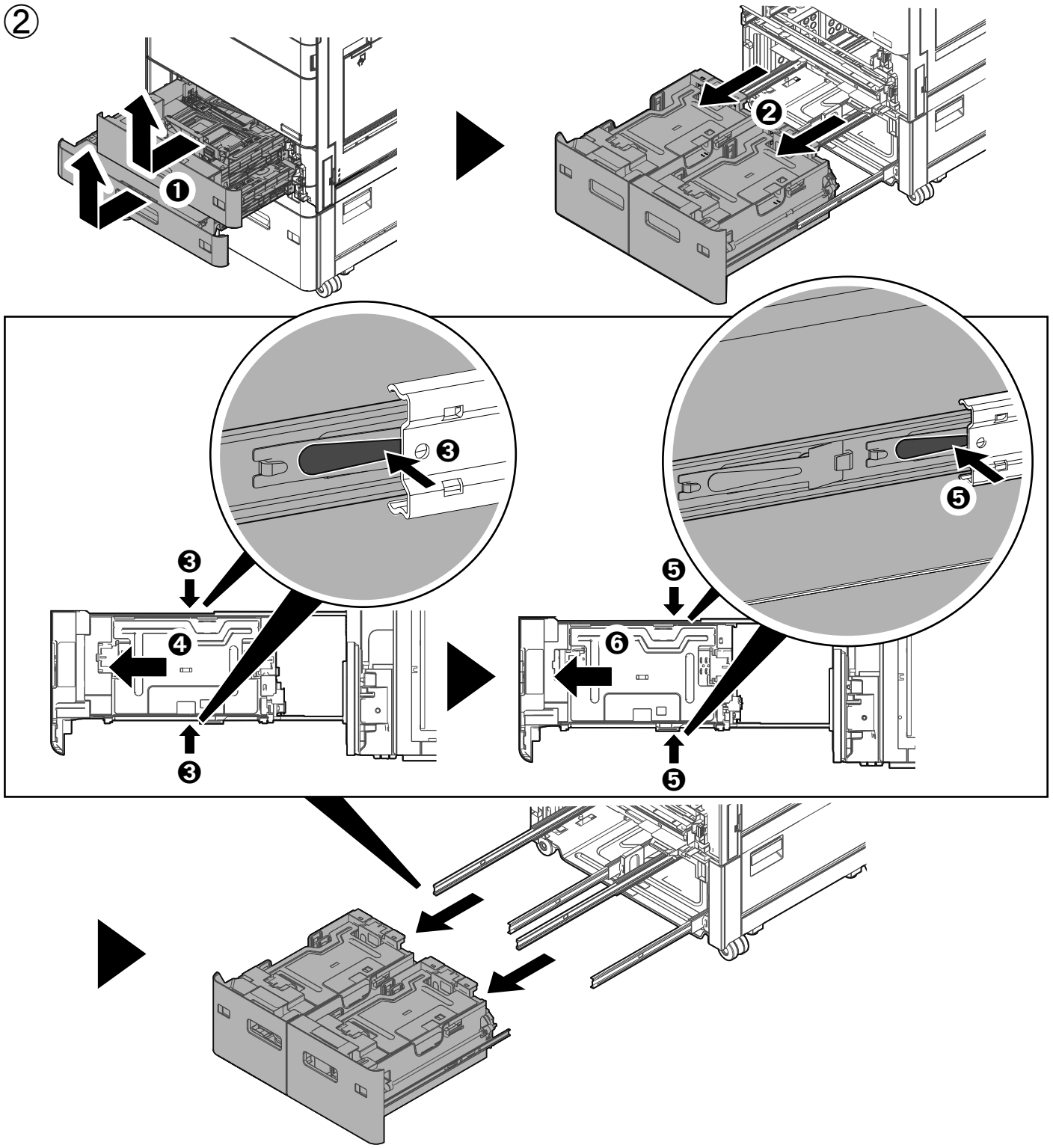

③

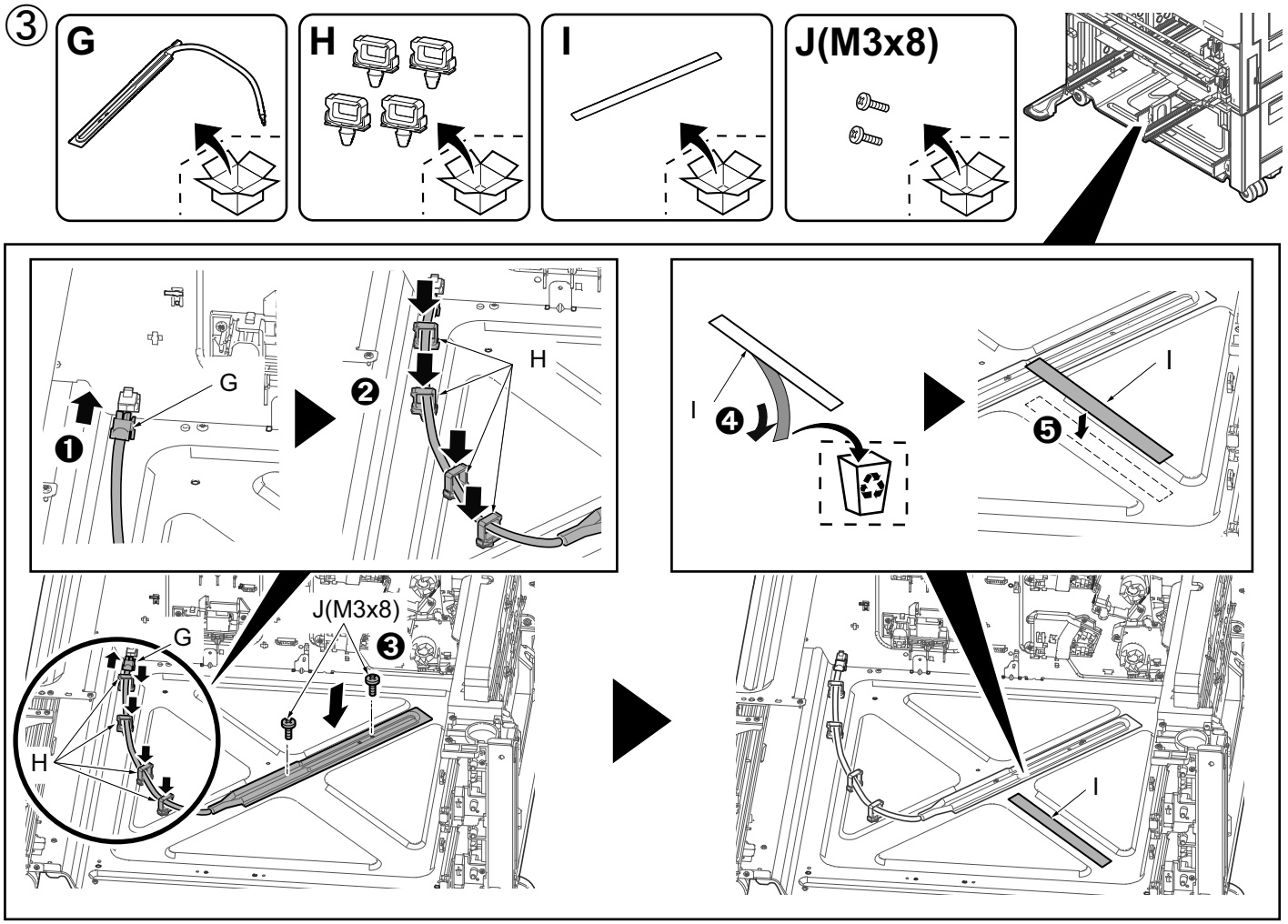

④

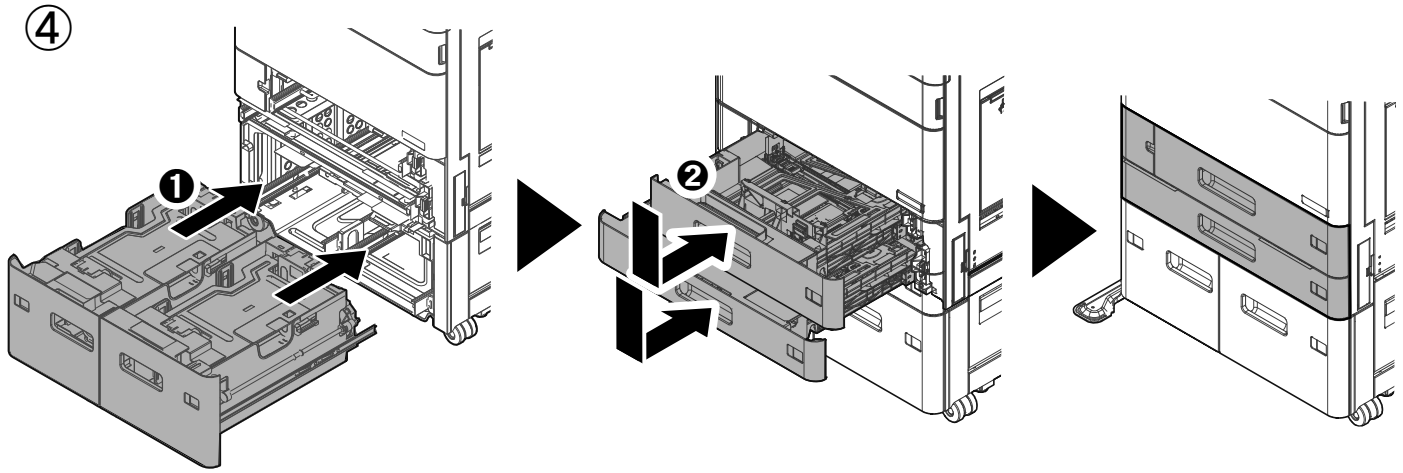

⑤

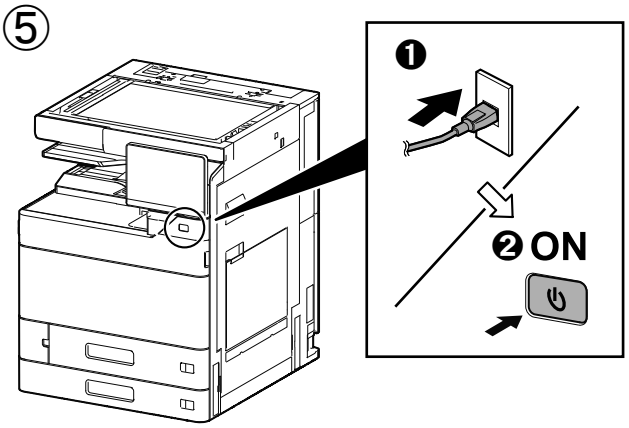

⑥

(EN) Maintenance mode U327 (Set Cass Heater > [Mode2])
(FR) Mode maintenance U327 (Set Cass Heater > [Mode2])
(ES) Modo de mantenimiento U327 (Set Cass Heater > [Mode2])
(DE) Wartungsmodus U327 (Set Cass Heater > [Mode2])
(IT) Modalità di manutenzione U327 (Set Cass Heater > [Mode2])
(ZHCN) 保养模式 U327 (Set Cass Heater > [Mode2])
(KO) 메인터넌스 모드 U327 (Set Cass Heater > [Mode2])
(JA) メンテナンスモード U327 (Set Cass Heater > [Mode2])

(EN) Do not unplug the power cord of the main unit when the cassette heater is installed. The cassette heater turns on once the turning the power switch of the main unit off.
(FR) Ne débranchez pas le câble d'alimentation de l'unité principale si le radiateur du magasin est installé. Le radiateur du magasin s'allume dès l'arrêt de l'alimentation de l'unité principale.
(ES) No desenchufe el cable de alimentación de la unidad principal si está instalado el calentador del depósito. El calentador del depósito se enciende una vez que se apaga la unidad principal con el interruptor de encendido y apagado.
(DE) Trennen Sie das Gerät nicht vom Netz, wenn Sie die Kassettenheizung anschließen. Die Kassettenheizung schaltet sich ein, sobald das Gerät ausgeschaltet wird.
(IT) Non scollegare il cavo dell'alimentazione dell'unità principale se è installato il riscaldatore cassetto. Il riscaldatore cassetto si accende quando si aziona l'interruttore dell'unità principale per spegnerla.
(ZHCN) 安装纸盒加热器时，请勿拔下主设备的电源线。当关闭主机的电源开关，纸盒加热器就通电。
(KO) 카세트 히터가 설치가 설치된 경우 본체의 전원 코드를 뽑지 마십시오.
본체의 전원 스위치를 끄면 카세트 히터가 켜집니다.
(JA) カセットヒーターを装着した場合は、コンセントを抜かないでください。カセットヒーターは、本体電源スイッチ OFF で通電します。



2021. 6
303TB5671201

MT-730(B)

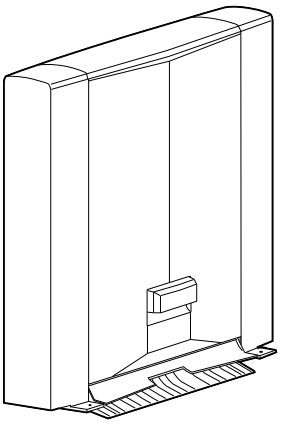

INSTALLATION GUIDE

GUIDE D'INSTALLATION

GUÍA DE INSTALACION

INSTALLATIONSANLEITUNG

GUIDA ALL'INSTALLAZIONE

安装手册

설치안내서

設置手順書

(EN)
A different procedure is required depending on the product which is installed with this unit.Each procedure is described in the following pages.
When installing to a document finisher, see Page 1 to Page 6.
When installing to a main unit,see Page 7 to Page 12.

(FR)
Une procédure différente est requise selon le produit qui est installé avec cette unité.Chaque procédure est décrite dans les pages suivantes.
Lors de l'installation sur un module finition de documents, voir Page 1 à Page 6.
Lors de l'installation sur une unité principale, voir Page 7 à Page 12.

(ES)
El procedimiento es diferente según el producto que se instale con esta unidad.En las siguientes páginas, se describe cada procedimiento.
Para la instalación con un finalizador de documentos, consulte las páginas de la 1 a la 6.
Cuando se instala en una unidad principal, consulte las páginas 7-12.

(DE)
Je nach verwendetem Modell ist eine andere Vorgehensweise zur Installation dieses Teils erforderlich.Die unterschiedlichen Vorgehensweisen werden auf den folgenden Seiten erläutert.
Bei Installation an einem Dokumentenfinisher siehe Seiten 1 bis 6.
Bei Installation an einem Gerät siehe Seiten 7 bis 12.
.

(IT)
Si richiede una procedura diversa in funzione del prodotto su cui è installata l'unità.Le singole procedure sono descritte nelle pagine seguenti.
Quando si installa un finisher documenti, vedere le pagine da 1 a 6.
Quando si installa su un'unità principale, vedere le pagine da 7 a 12.

(ZHCN)
根据安装对象，安装步骤略有不同。各个步骤记载在下面的页面。
安装到装订器时，请参见第 1 ～ 6 页。
安装到主机时，请参阅第 7 页至第 12 页。

(KO)
이 장치에 설치되는 제품에 따라 절차가 다릅니다 . 다음 페이지에서 각 절차를 설명합니다 .
문서 피니셔에 설치하는 경우 1 페이지 ~6 페이지를 참조하십시오 .
본체에 설치하는 경우 7 ～ 12 페이지를 참조하십시오 .

(JA)
装着する対象によって、取付手順は異なります。それぞれ、以下のページに記載しています。
ドキュメントフィニッシャーに設置する場合;1 ページ～ 6 ページ
本体に設置する場合;7 ページ～ 12 ページ

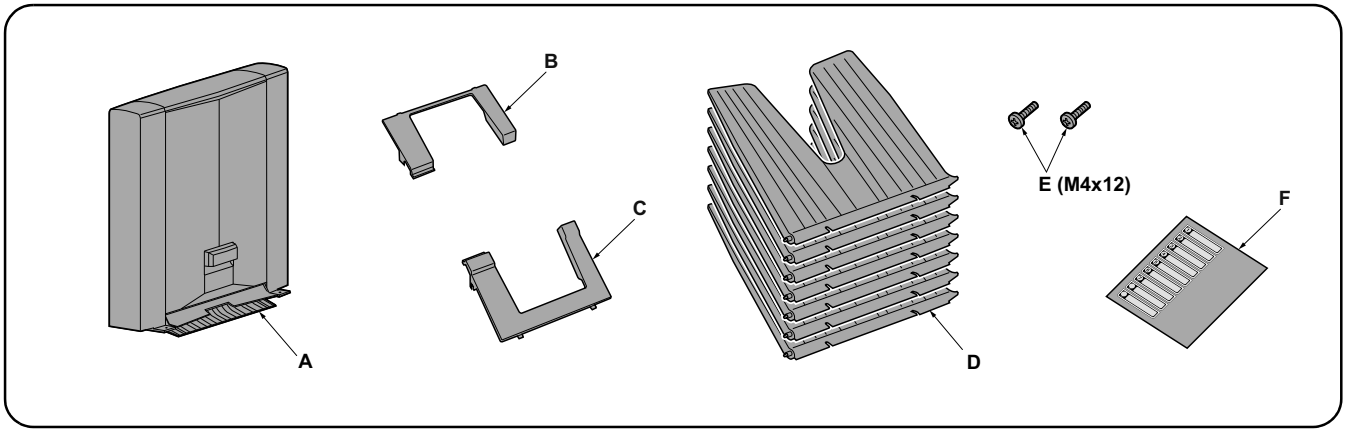

(EN)
Supplied parts
A. Mailbox 1
B. Front mounting plate cover 1
C. Rear mounting plate cover 1
D. Copy eject bins 7
E. M4 × 12 screw 2
F. Tray name label (for users) 1

Be sure to remove any tape and/or cushioning materials from the parts supplied.

(FR)
Pièces fournies
A. Boîte à lettres 1
B. Couvercle de la plaque de montage avant 1
C. Couvercle de la plaque de montage arrière ... 1
D. Case d'éjection de copies 7
E. Vis M4 × 12 2
F. Étiquette de nom de plateau (pour les utilisateurs) 1

Veillez à retirer les morceaux de bande adhésive et/ou les matériaux de rembourrage des pièces fournies.

(ES)
Partes suministradas
A. Buzón de correo 1
B. Cubierta de la placa de montaje frontal 1
C. Cubierta de la placa de montaje trasera 1
D. Bandejas de expulsión de copias 7
E. Tornillo M4 × 12 2
F. Etiqueta de nombre de la bandeja (para usuarios) 1

Asegúrese de quitar todas las cintas y/o material amortiguador de las partes suministradas.

(DE)
Enthaltene Teile
A. Mailbox 1
B. Vordere Abdeckung der Montageplatte 1
C. Hintere Abdeckung der Montageplatte 1
D. Kopienausgabefächer 7
E. Schraube M4 × 12 2
F. Fachnamenaufkleber (für Benutzer) 1

Stellen Sie sicher, dass sämtliche Klebebänder und/oder Polstermaterial von den gelieferten Teilen entfernt wurden.

(IT)
Parti fornite
A. Mailbox 1
B. Coperchio della piastra di montaggio anteriore .. 1
C. Coperchio della piastra di montaggio posteriore. 1
D. Scomparti di espulsione delle copie 7
E. Vite M4 × 12 2
F. Etichetta di nome del vassoio (per utenti) 1

Rimuovere tutti i nastri adesivi e/o i materiali di protezione dalle parti fornite.

(ZHCN)
附属品
A. 邮箱..... 1
B. 支撑板前盖板..... 1
C. 支撑板后盖板..... 1
D. 接纸盘..... 7
E. M4×12 螺丝 2
F. 托盘名称标贴（用户用）..... 1

如果附属品上带有固定胶带，缓冲材料时务必揭下。

(KO)
동봉품
A. 메일박스..... 1
B. 부착판커버 앞..... 1
C. 부착판커버 뒤..... 1
D. 배출핀..... 7
E. 나사 M4 × 12..... 2
F. 트레이 명칭 씰（사용자용）..... 1

동봉품에 고정 테이프，완충재가 붙어 있는 경우에는 반드시 제거하십시오 .

(JP)
同梱品
A. メールボックス..... 1
B. 取付板カバー前..... 1
C. 取付板カバー後..... 1
D. 排出ビン..... 7
E. ビス M4×12 2
F. トレイ名称シール(ユーザー用) 1

同梱品に固定テープ､緩衝材が付いている場合は必ず取り外すこと。

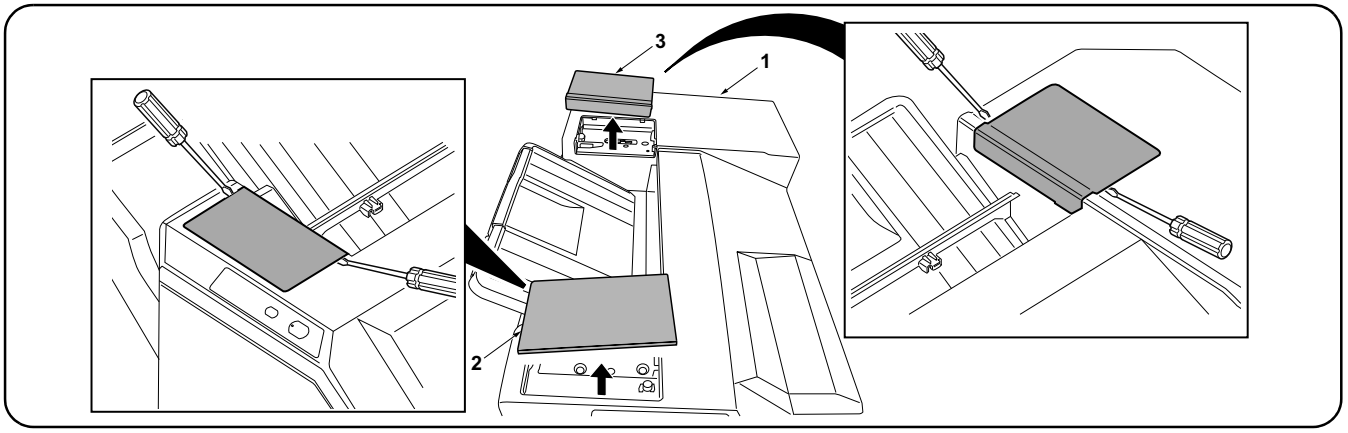

Procedure
Before starting installation, be sure to turn the main power switch of the machine off, and unplug the power plug from the wall outlet.

1. Remove the front top cover (2) and rear top cover (3) at the top of the finisher (1) using a flat-blade screwdriver or the like.

Procédure
Avant de commencer l'installation, s'assurer de mettre la machine hors tension et de débrancher la fiche d'alimentation de la prise murale.

1. Retirer le couvercle supérieur avant (2) et le couvercle supérieur arrière (3) situés en haut du retoucheur (1) à l'aide d'un tournevis à tête plate ou d'un outil équivalent.

Procedimiento
Antes de iniciar la instalación, asegúrese de apagar el interruptor de encendido de la máquina y desenchufar el cable de alimentación de la toma de pared.

1. Remueva la cubierta superior delantera (2) y la cubierta superior trasera (3) en la parte superior del finalizador (1) utilizando un destornillador de punta plana o similar.

Verfahren
Bevor Sie mit der Installation beginnen überzeugen Sie sich, dass der Netzschalter des Geräts ausgeschaltet und das Stromkabel aus der Steckdose gezogen ist.

1. Entfernen Sie die vordere obere Abdeckung (2) und die hintere obere Abdeckung (3) an der Oberseite des Finishers (1) mit einem Klingenschraubendreher oder dergleichen.

Procedura
Prima di iniziare l'installazione, spegnere la macchina e scollegare la spina dalla presa di corrente.

1. Rimuovere il coperchio superiore anteriore (2) e il coperchio superiore posteriore (3) dalla parte superiore del finitore (1) utilizzando un cacciavite a punta piatta, o un attrezzo simile.

安装步骤
安装前务必关闭机器的主电源开关，并从墙壁插座拔下电源插头。

1. 用一字形螺丝刀拆下装订器 (1) 上部的顶罩前盖板 (2) 和顶罩后盖板 (3)。

설치순서
설치를 시작하기 전에 반드시 본체의 주 전원 스위치를 끄고 벽 콘센트에서 전원 플러그를 분리하십시오 .

1. 피니셔 (1) 상부의 윗커버 앞 덮개 (2), 윗커버 뒤 덮개 (3) 를 마이너스 드라이버 등으로 제거합니다 .

取付手順
必ず機械本体の主電源スイッチを OFF にし、機械本体の電源プラグを抜いてから作業すること。

1. フィニッシャー (1) 上部の天カバー前フタ (2) 、天カバー後フタ (3) をマイナスドライバーなどで取り外す。

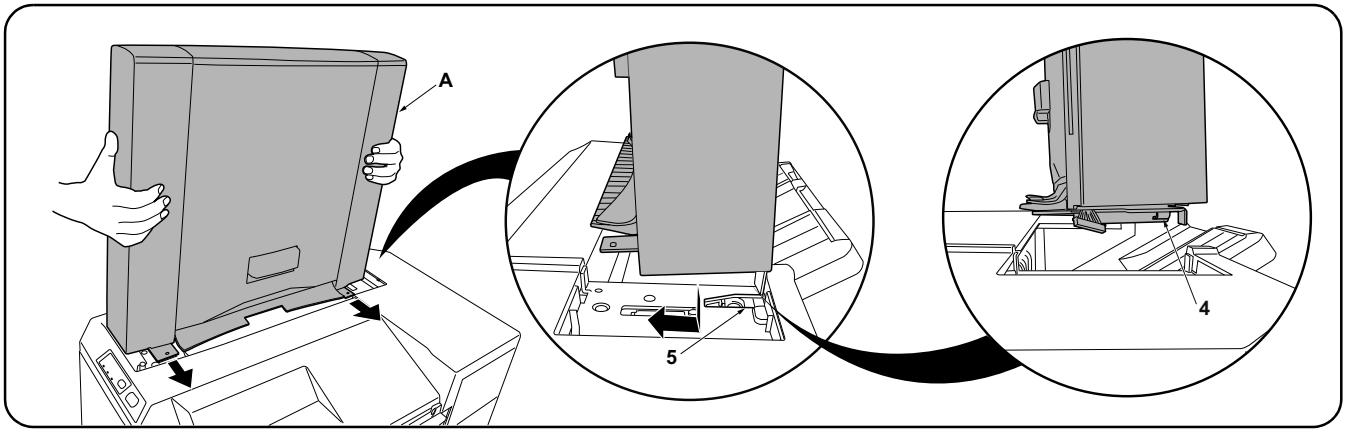

2. Fit the hooks (4) located at the front and rear of the bottom of the mailbox (A) into the notches (5) located at the front and rear of the top of the finisher (1) as shown in the illustration and attach the mailbox (A) to the finisher (1).
Note:
Lift the front and rear of the mailbox (A) lightly upward to make sure that no gap is made between the mailbox (A) and the machine.

---

2. Insérer les crochets (4) se trouvant à l'avant et à l'arrière au fond de la boîte à lettres (A) dans les encoches (5) situées à l'avant et à l'arrière en haut du retoucheur (1) comme illustré ici, puis fixer la boîte à lettres (A) au retoucheur (1).
Remarque:
Lever légèrement l'avant et l'arrière de la boîte à lettres (A) de sorte qu'il n'y ait aucun interstice entre la boîte à lettres (A) et la machine.

---

2. Coloque los ganchos (4) ubicados en la parte inferior frontal y trasera del buzón de correo (A) en las muescas (5) ubicadas en la parte superior frontal y trasera del finalizador (1), como se muestra en la ilustración, y coloque el buzón de correo (A) en el finalizador (1).
Nota:
Levante ligeramente la parte frontal y trasera del buzón de correo (A) para asegurarse de que no queda espacio entre el buzón de correo (A) y la máquina.

---

2. Setzen Sie die Haken (4) an der Vorder- und Rückseite der Mailbox (A) in die Öffnungen (5) vorne und hinten an der Oberseite des Finishers (1) ein, wie in der Abbildung dargestellt, und bringen Sie die Mailbox (A) am Finisher (1) an.
Hinweis:
Heben Sie die Vorder- und Rückseite der Mailbox (A) ein wenig an, damit sich kein Spalt zwischen der Mailbox (A) und dem Gerät bildet.

---

2. Inserire i ganci (4) posizionati sul davanti e sul dietro della parte di fondo della mailbox (A), negli incavi (5) posizionati sul davanti e sul dietro della parte superiore del finitore (1) come mostrato nell'illustrazione, e fissare la mailbox (A) al finitore (1).
Nota:
Sollevare leggermente la parte anteriore e posteriore della mailbox (A) verso l'alto per accertarsi che non vi sia dello spazio tra la mailbox (A) e la macchina.

---

2. 如图所示，将位于邮箱 (A) 底部前后侧的卡扣 (4) 嵌入位于装订器 (1) 顶部前后侧的凹口 (5)，并将邮箱 (A) 安装至装订器 (1)。
注：
轻轻向上提升邮箱 (A) 的前后侧，确保邮箱 (A) 未处于悬浮状态。

---

2. 메일박스 (A) 하부의 앞뒤에 있는 후크 (4) 를 피니셔 (1) 상부의 앞뒤에 있는 파인 홈에 (5) 에 일러스트와 같이 삽입하고 메일박스 (A) 를 피니셔측에 장착합니다 .
주
메일박스 (A) 의 앞뒤를 각각 상방향으로 가볍게 들어 메일박스 (A) 가 떠 있지 않은 것을 확인합니다 .

---

2. メールボックス (A) 下部の前後にあるフック (4) をフィニッシャー(1) 上部の前後にある切り欠き部 (5) にイラストのように挿入し、メールボックス (A) をフィニッシャー(1) に取り付ける。
注意
メールボックス (A) の前後をそれぞれ上方向に軽く持ち上げ、メールボックス (A) が浮かないことを確認する。

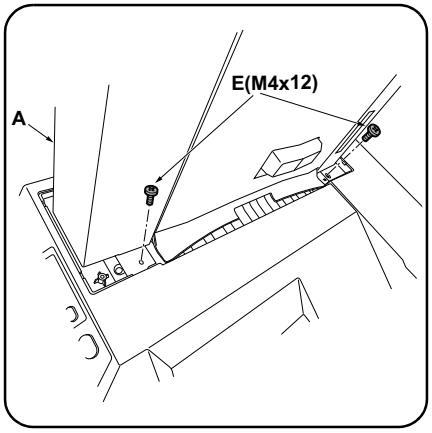

3. Secure the mailbox (A) using the two screws M4x12 (E).

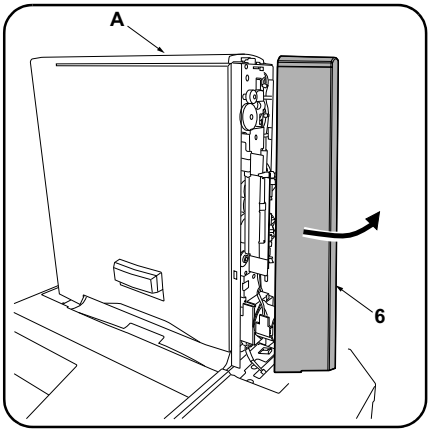

4. Remove the rear cover (6) of the mailbox (A).

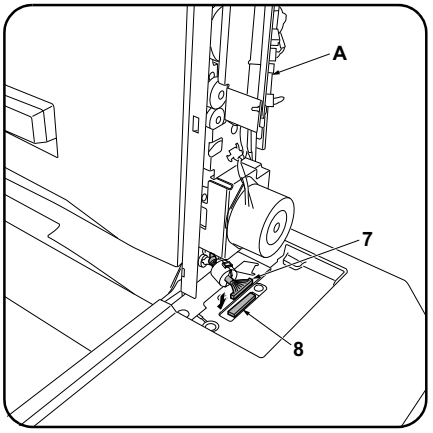

5. Plug the connector (7) of the mailbox (A) into the connector (8) of the machine body.
6. Reinstall the rear cover (6) of the mailbox (A).

---

3. Fixer la boîte à lettres (A) à l'aide de deux vis M4x12 (E).

4. Retirer le couvercle arrière (6) de la boîte à lettres (A).

5. Brancher le connecteur (7) de la boîte à lettres (A) dans le connecteur (8) du corps de la machine.
6. Remonter le couvercle arrière (6) de la boîte à lettres (A).

---

3. Fije el buzón de correo (A) con dos tornillos M4x12 (E).

4. Quite la cubierta posterior (6) del buzón de correo (A).

5. Enchufe el conector (7) del buzón de correo (A) al conector (8) del cuerpo de la máquina.
6. Vuelva a instalar la cubierta posterior (6) del buzón de correo (A).

---

3. Sichern Sie die Mailbox (A) mit zwei Schrauben M4x12 (E).

4. Entfernen Sie die hintere Abdeckung (6) der Mailbox (A).

5. Stecken Sie den Stecker (7) der Mailbox (A) in die Steckbuchse (8) des Gerätegehäuses.
6. Bringen Sie die hintere Abdeckung (6) der Mailbox (A) wieder an.

---

3. Fissare la mailbox (A) utilizzando le due viti M4x12 (E).

4. Rimuovere il coperchio posteriore (6) della mailbox (A).

5. Collegare il connettore (7) della mailbox (A) al connettore (8) del corpo macchina.
6. Reinstallare il coperchio posteriore (6) della mailbox (A).

---

3. 使用两个螺丝 M4x12（E）固定邮箱（A）。

4. 拆下邮箱（A）的后部盖板（6）。

5. 将邮箱（A）的接插件（7）插入机器的接插件（8）。
6. 重新安装邮箱（A）的后盖板（6）。

---

3. M4x12 나사 (E) 두 개를 사용하여 메일박스 (A) 를 고정합니다 .

4. 메일박스 (A) 의 뒤커버 (6) 를 떼어냅니다 .

5. 메일박스 (A) 의 커넥터 (7) 를 본체의 커넥터 (8) 에 연결합니다
6. 메일박스 (A) 의 뒤커버 (6) 를 다시 장착합니다 .

---

3. ビス M4×12(E)2 本で、メールボックス (A) を固定する。

4. メールボックス (A) の後カバー(6) を取り外す。

5. メールボックス (A) のコネクター(7) を機械本体のコネクター (8) に接続する。
6. メールボックス (A) の後カバー(6) を元通りに取り付ける。

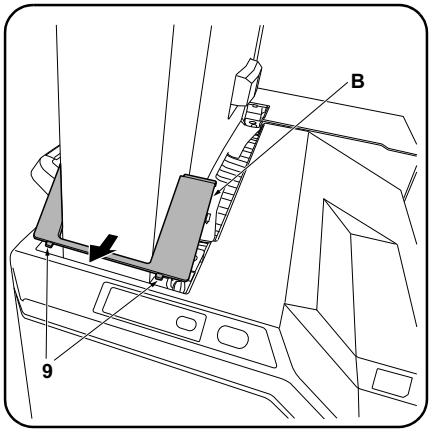

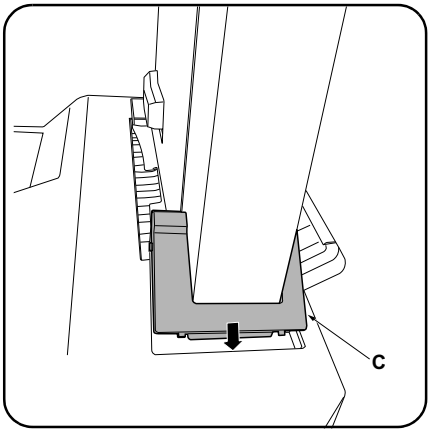

7. Insert the 2 hooks (9) on the front mounting plate cover (B) for the mailbox into the finisher to install the cover (B).

8. Install the rear mounting plate cover (C) on the finisher in the same way.

---

7. Insérer les 2 crochets (9) du couvercle de la plaque de montage avant (B) de la boîte à lettres dans le retourcheur pour installer ce couvercle (B).

8. Installer le couvercle de la plaque de montage arrière (C) sur le retoucheur en procédant de la même manière.

---

7. Para instalar la cubierta (B), inserte los 2 ganchos (9) de la cubierta de la placa de montaje frontal (B) para el buzón de correo en el finalizador.

8. Instale de la misma manera la cubierta de la placa de montaje trasera (C) en el finalizador.

---

7. Setzen Sie die 2 Haken (9) an der vorderen Abdeckung der Montageplatte (B) für die Mailbox in den Finisher ein, um die Abdeckung (B) zu installieren.

8. Bringen Sie auf gleiche Weise die hintere Abdeckung der Montageplatte (C) am Finisher an.

---

7. Inserire nel finitore i 2 ganci (9) posizionati sul coperchio della piastra di montaggio anteriore (B) per la mailbox, per installare il coperchio (B).

8. Installare il coperchio della piastra di montaggio posteriore (C) sul finitore nella stessa maniera.

---

7. 将邮箱的安装板前部盖板 (B) 的 2 个卡扣 (9) 插入到装订器中，以安装安装板前部盖板 (B)。

8. 按相同方法将安装板后部盖板 (C) 安装到装订器上。

---

7. 메일박스의 부착판 커버 앞 (B) 의 후크 (9) 2 곳을 피니셔에 삽입하고 부착판 커버 앞 (B) 을 장착합니다 .

8. 같은 방식으로 부착판 커버 뒤 (C) 를 피니셔에 장착합니다 .

---

7. メールボックスの取付板カバー前 (B) のフック (9)2 箇所をフィニッシャーに挿入し、取付板カバー前 (B) を取り付ける。

8. 同様に取付板カバー後 (C) をフィニッシャーに取り付ける。

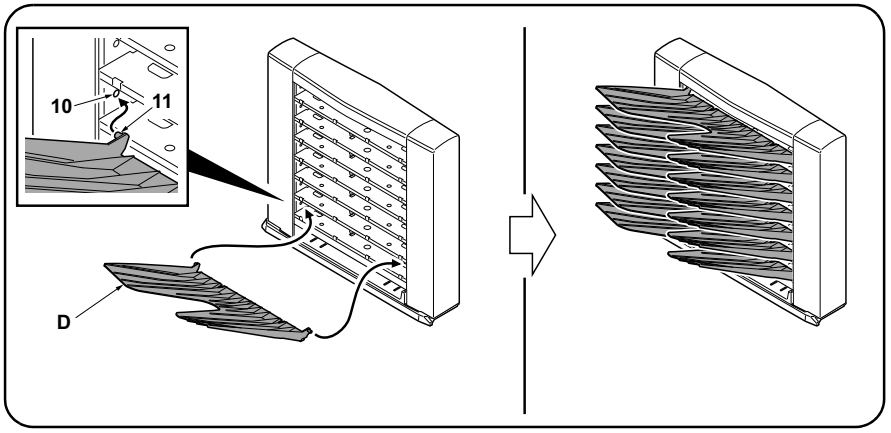

9. Fit the seven copy eject bins (D) to the ejection section of the mailbox (A) from the lowest bin to the highest.
Press both ends of each copy eject bin (D) to bend it a little, then fit the bin by inserting the front and rear pins (10) into the round holes (11) at the front and rear of the mailbox.

10. Insert the power plug from the machine into the outlet, turn the main power switch on, and verify the machine operates normally.

---

9. Fixer les sept cases d'éjection de copies (D) sur la section d'éjection de la boîte à lettres (A), en procédant de la case située tout en bas à celle située tout en haut.
Appuyer sur les deux extrémités de chaque case d'éjection des copies (D) pour cintrer légèrement cette pièce, puis monter la case en insérant les broches avant et arrière (10) dans les trous ronds (11) à l'avant et à l'arrière de la boîte à lettres.

10. Insérer la fiche d'alimentation de la machine dans la prise et mettre la machine sous tension, puis vérifier qu'elle fonctionne correctement.

---

9. Presione ambos extremos de cada bandeja de expulsión de copias (D) para doblarlas un poco; después, coloque la bandeja insertando los pasadores delantero y trasero (10) en los orificios redondos (11) en la parte frontal y posterior del buzón de correo.

10. Enchufe el cable de alimentación de la máquina en la toma de corriente y encienda el interruptor principal para comprobar que la máquina funciona correctamente.

---

9. Setzen Sie die sieben Kopienausgabefächer (D) in die Ausgabeöffnungen der Mailbox (A) ein, beginnend vom untersten Fach zum höchsten.
Drücken Sie beide Enden jedes Kopienausgabefachs (D) zusammen, um es etwas zu biegen. Setzen Sie das Fach ein, indem Sie die vorderen und hinteren Stifte (10) in die Rundlöcher (11) vorne und hinten an der Mailbox einsetzen.

10. Stecken Sie den Netzstecker des Geräts in eine Steckdose und schalten Sie den Hauptschalter des Geräts ein, um den Betrieb zu prüfen.

---

9. Installare i sette scomparti di espulsione delle copie (D) nella sezione di espulsione della mailbox (A), iniziando dallo scomparto più in basso fino a quello più in alto.
Premere le due estremità di ciascuno scomparto di espulsione delle copie (D) in modo da piegarlo leggermente, quindi installare lo scomparto inserendo i perni anteriore e posteriore (10) nei fori rotondi (11) presenti sul fronte e sul retro della mailbox.

10. Inserire la spina nella presa di corrente, accendere la macchina e controllare che funzioni correttamente.

---

9. 从邮箱 (A) 的排出部下面起按顺序安装 7 个接纸盘 (D)。
按住接纸盘 (D) 的左右两侧并使其稍稍下垂，通过将前后的销钉 (10) 插入邮箱前后的圆孔 (11) 中来安装接纸盘。

10. 将机器的电源插头插入插座，然后打开主电源开关并确认机器能否正常操作。

---

9. 배출핀 (D) 7 개를 메일박스 (A) 의 배출부에 밑에서부터 순서대로 장착합니다 .
배출핀 (D) 의 좌우를 밀어 조금 휘게해 앞뒤의 핀 (10) 을 메일박스의 앞뒤의 둥근 구멍 (11) 에 삽입합니다 .

10. 기기본체의 전원 플러그를 콘센트에 꼽고 주전원 스위치를 ON 으로 해서 동작을 확인 합니다 .

---

9. 排出ビン (D)7 枚をメールボックス (A) の排出部に下から順番に取り付ける。
排出ビン (D) の左右を押し少したわませ、前後のピン (10) をメールボックスの前後の丸穴 (11) に挿入する。

10. 機械本体の電源プラグをコンセントに差し込み、主電源スイッチを ON にして動作を確認する。

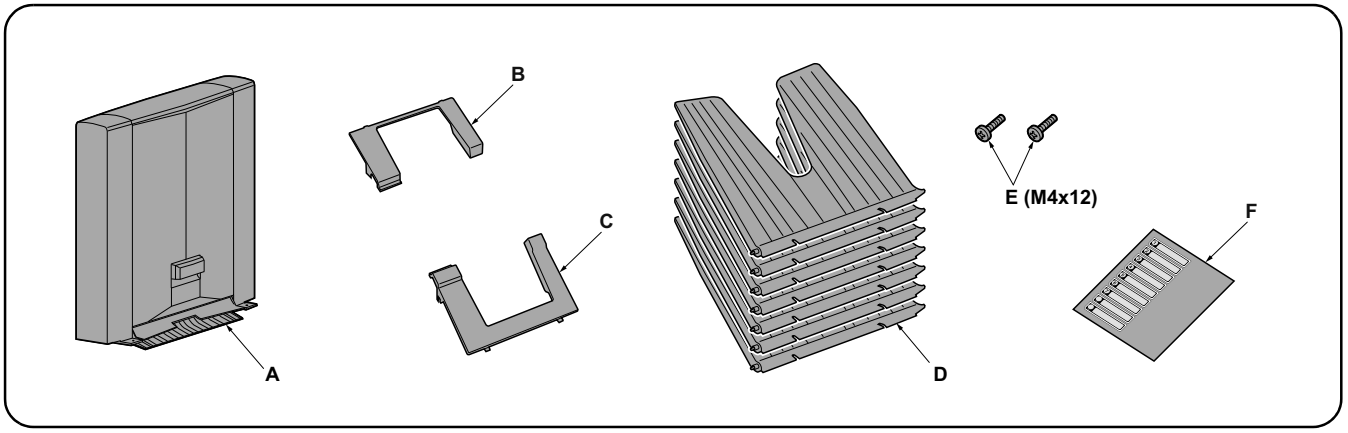

(EN)

Supplied parts

A. Mailbox 1
B. Front mounting plate cover 1
C. Rear mounting plate cover 1
D. Copy eject bins 7
E. M4 × 12 screw 2

F. Tray name label (for users)..... 1

B and C are not used.

Be sure to remove any tape and/or cushioning materials from the parts supplied.

(FR)

Pièces fournies

A. Boîte à lettres 1
B. Couvercle de la plaque de montage avant..... 1
C. Couvercle de la plaque de montage arrière ... 1
D. Case d'éjection de copies..... 7
E. Vis M4 × 12..... 2

F. Étiquette de nom de plateau (pour les utilisateurs) 1

B et C ne sont pas utilisés.

Veillez à retirer les morceaux de bande adhésive et/ou les matériaux de rembourrage des pièces fournies.

(ES)

Partes suministradas

A. Buzón de correo 1
B. Cubierta de la placa de montaje frontal..... 1
C. Cubierta de la placa de montaje trasera.... 1
D. Bandejas de expulsión de copias 7
E. Tornillo M4 × 12 2

F. Etiqueta de nombre de la bandeja (para usuarios)..... 1

B y C no se utilizan.

Asegúrese de quitar todas las cintas y/o material amortiguador de las partes suministradas.

(DE)

Enthaltene Teile

A. Mailbox 1
B. Vordere Abdeckung der Montageplatte..... 1
C. Hintere Abdeckung der Montageplatte 1
D. Kopienausgabefächer..... 7
E. Schraube M4 × 12 2

F. Fachnamenaufkleber (für Benutzer)..... 1

B und C werden nicht benötigt.

Stellen Sie sicher, dass sämtliche Klebebänder und/oder Polstermaterial von den gelieferten Teilen entfernt wurden.

(IT)

Parti fornite

A. Mailbox 1
B. Coperchio della piastra di montaggio anteriore .. 1
C. Coperchio della piastra di montaggio posteriore. 1
D. Scomparti di espulsione delle copie 7
E. Vite M4 × 12 2

F. Etichetta di nome del vassoio (per utenti) 1

B e C non sono utilizzati.

Rimuovere tutti i nastri adesivi e/o i materiali di protezione dalle parti fornite.

(ZHCN)

附属品

A. 邮箱..... 1
B. 支撑板前盖板..... 1
C. 支撑板后盖板..... 1
D. 接纸盘..... 7

E. M4×12 螺丝 2
F. 托盘名称标贴（用户用）..... 1

不使用 B 和 C。

如果附属品上带有固定胶带，缓冲材料时务必揭下。

(KO)

동봉품

A. 메일박스..... 1
B. 부착판커버 앞..... 1
C. 부착판커버 뒤..... 1
D. 배출핀..... 7

E. 나사 M4 × 12..... 2
F. 트레이 명칭 씰 (사용자용) 1

B 와 C 는 사용되지 않습니다 .

동봉품에 고정 테이프 , 완충재가 붙어 있는 경우에는 반드시 제거하십시오 .

(JP)

同梱品

A. メールボックス..... 1
B. 取付板カバー前..... 1
C. 取付板カバー後..... 1
D. 排出ビン..... 7
E. ビス M4×12 2

F. トレイ名称シール(ユーザー用) 1

B,C は使用しない。

同梱品に固定テープ、緩衝材がついている場合は、必ず取り外すこと。

Note
The Attachment Kit(AK-736) must be installed before the mailbox is installed.

Procedure
Before starting installation, be sure to turn the main power switch of the machine off, and unplug the power plug from the wall outlet.

Remarque
L'Attachment Kit (AK-736) doit être installé avant d'installer la boîte à lettres.

Procédure
Avant de commencer l'installation, s'assurer de mettre la machine hors tension et de débrancher la fiche d'alimentation de la prise murale.

Nota
El Attachment Kit (AK-736) se debe instalar antes de la instalación del buzón de correo.

Procedimiento
Antes de iniciar la instalación, asegúrese de apagar el interruptor de encendido de la máquina y desenchufar el cable de alimentación de la toma de pared.

Hinweis
Das Attachment Kit (AK-736) muss vor der Installation der Mailbox installiert werden.

Vorgehensweise
Bevor Sie mit der Installation beginnen überzeugen Sie sich, dass der Netzschalter des Geräts ausgeschaltet und das Stromkabel aus der Steckdose gezogen ist.

Nota
Installare l'Attachment Kit (AK-736) prima di installare il vassoio mailbox.

Procedura
Prima di iniziare l'installazione, spegnere la macchina e scollegare la spina dalla presa di corrente.

注
在安装邮箱前，请先安装连接组件（AK-736）。

安装步骤
安装前务必关闭机器的主电源开关，并从墙壁插座拔下电源插头。

주
메일박스를 설치하기 전에 부착 키트 (AK-736) 를 설치해야 합니다 .

설치순서
설치를 시작하기 전에 반드시 본체의 주 전원 스위치를 끄고 벽 콘센트에서 전원 플러그를 분리하십시오 .

注意
メールボックスを取付ける前にアタッチメントキット (AK-736) の取付けをおこなうこと。

取付手順
必ず機械本体の主電源スイッチを OFF にし、機械本体の電源プラグを抜いてから作業すること。

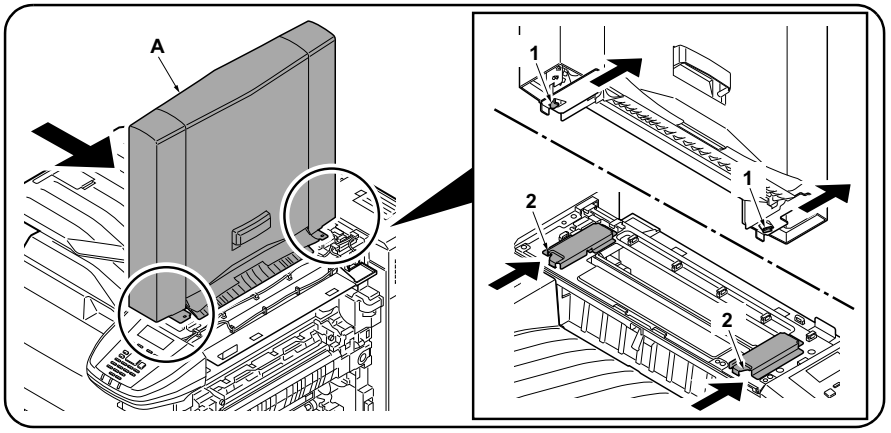

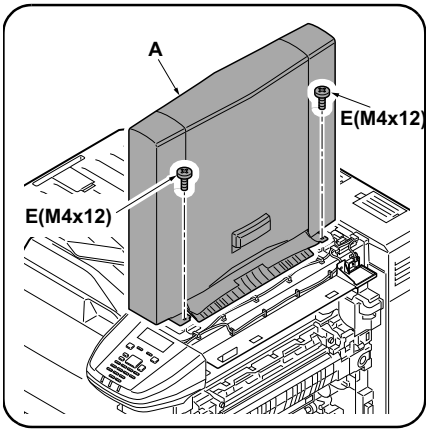

1. Insert the hooks (1) located at the front and rear of the bottom of the mailbox (A) into the notches (2) of the machine and attach the mailbox (A) to the machine.
Note
Lift the front and rear of the mailbox (A) lightly upward to make sure that no gap is made between the mailbox (A) and the machine.

2. Secure the mailbox (A) using the two screws M4x12 (E).

---

1. Insérer les crochets (1) situés à l'avant et à l'arrière du fond de la boîte à lettres (A) dans les encoches (2) de la machine et fixer la boîte aux lettres (A) à la machine.
Remarque
Lever légèrement l'avant et l'arrière de la boîte à lettres (A) de sorte qu'il n'y ait aucun interstice entre la boîte à lettres (A) et la machine.

2. Fixer la boîte à lettres (A) à l'aide de deux vis M4x12 (E).

---

1. Inserte los enganches (1) que se encuentran en la parte frontal y trasera de la parte inferior del buzón de correo (A) en las hendiduras (2) de la máquina y acople el buzón de correo (A) a la máquina.
Nota
Levante ligeramente la parte frontal y trasera del buzón de correo (A) para asegurarse de que no queda espacio entre el buzón de correo (A) y la máquina.

2. Fije el buzón de correo (A) con dos tornillos M4x12 (E).

---

1. Führen Sie die Haken (1), die sich hinten und vorne an der Unterseite der Mailbox (A) befinden, in die Aufnahmen (2) des Geräts ein und befestigen Sie die Mailbox (A) am Gerät.
Hinweis
Heben Sie die Vorder- und Rückseite der Mailbox (A) ein wenig an, damit sich kein Spalt zwischen der Mailbox (A) und dem Gerät bildet.

2. Sichern Sie die Mailbox (A) mit zwei Schrauben M4x12 (E).

---

1. Inserire i ganci (1) posti sul fronte e sul retro della sezione inferiore della mailbox (A) negli incavi (2) presenti sulla macchina e fissare la mailbox (A) sulla macchina.
Nota
Sollevare leggermente la parte anteriore e posteriore della mailbox (A) verso l'alto per accertarsi che non vi sia dello spazio tra la mailbox (A) e la macchina.

2. Fissare la mailbox(A) utilizzando le due viti M4x12 (E).

---

1. 将位于邮箱(A)底部前、后侧的挂钩(1)插入机器的凹槽(2)，然后将邮箱(A)安装至机器。
注
轻轻向上提升邮箱 (A) 的前后侧，确保邮箱 (A) 未处于悬浮状态。

2. 使用两个螺丝 M4x12(E)固定邮箱(A)。

---

1. 메일박스 (A) 의 전후면 하단에 있는 후크 (1) 를 본체의 노치 (2) 에 삽입하여 메일박스 (A) 를 본체에 부착합니다 .
주
메일박스 (A) 의 앞뒤를 각각 상방향으로 가볍게 들어 메일박스 (A) 가 떠 있지 않은 것을 확인합니다 .

2. M4x12 나사 (E) 두 개를 사용하여 메일박스 (A) 를 고정합니다 .

---

1. メールボックス (A) 下部の前後にあるフック (1) を機械本体の切り欠き (2) に挿入し、メールボックス (A) を機械本体に取り付ける。
注意
メールボックス (A) の前後をそれぞれ上方向に軽く持ち上げ、メールボックス (A) が浮かないことを確認する。

2. ビス M4×12(E)2 本で、メールボックス (A) を固定する。

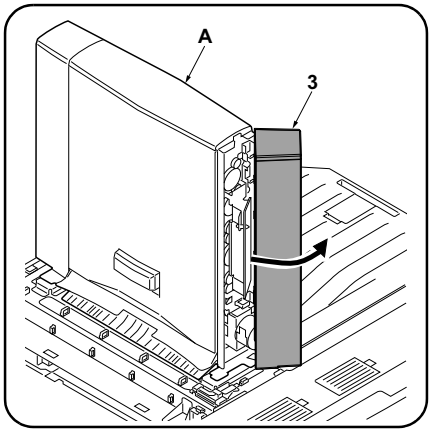

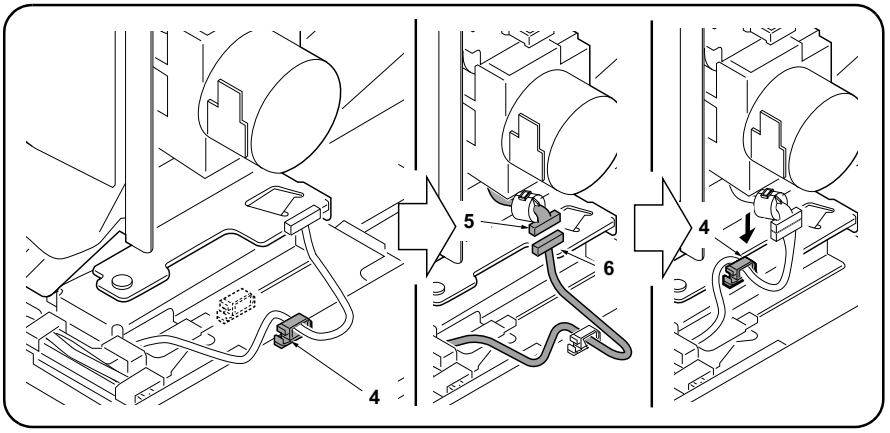

3. Remove the rear cover (3) of the mailbox (A).

4. Remove the wire saddle (4).
5. Plug the connector (5) of the mailbox (A) into the connector (6) of the machine body.
6. Install the wire saddle (4) in the position as shown in the figure.
7. Reinstall the rear cover (3) of the mailbox (A).

---

3. Retirer le couvercle arrière (3) de la boîte à lettres (A).

4. Retirer le serre-câble (4).
5. Brancher le connecteur (5) de la boîte à lettres (A) dans le connecteur (6) du corps de la machine.
6. Installer le serre-câble (4) dans la position illustrée sur la figure.
7. Remonter le couvercle arrière (3) de la boîte à lettres (A).

---

3. Quite la cubierta posterior (3) del buzón de correo (A).

4. Retire la abrazadera del cable (4).
5. Enchufe el conector (5) del buzón de correo (A) al conector (6) del cuerpo de la máquina.
6. Instale la abrazadera del cable (4) en la posición que se muestra en la imagen.
7. Vuelva a instalar la cubierta posterior (3) del buzón de correo (A).

---

3. Entfernen Sie die hintere Abdeckung (3) der Mailbox (A).

4. Entfernen Sie die Kabelbefestigung (4).
5. Stecken Sie den Stecker (5) der Mailbox (A) in die Steckbuchse (6) des Gerätegehäuses.
6. Installieren Sie die Kabelbefestigung (4) an der im Bild gezeigten Position.
7. Bringen Sie die hintere Abdeckung (3) der Mailbox (A) wieder an.

---

3. Rimuovere il coperchio posteriore (3) della mailbox (A).

4. Rimuovere l'unità sella (4).
5. Collegare il connettore (5) della mailbox (A) al connettore (6) del corpo macchina.
6. Installare l'unità sella (4) nella posizione indicata in figura.
7. Reinstallare il coperchio posteriore (3) della mailbox (A).

---

3. 拆下邮箱(A)的后部盖板(3)。

4. 取下束线夹(4)。
5. 将邮箱(A)的接插件(5)插入机器的接插件(6)。
6. 把束线夹(4)安装到图示位置。
7. 重新安装邮箱(A)的后盖板(3)。

---

3. 메일박스 (A) 의 뒤커버 (3) 를 떼어냅니다 .

4. 와이어 새들 (4) 을 분리합니다 .
5. 메일박스 (A) 의 커넥터 (5) 를 본체의 커넥터 (6) 에 연결합니다 .
6. 와이어 새들 (4) 을 그림에 표시된 위치에 설치합니다 .
7. 메일박스 (A) 의 뒤커버 (3) 를 다시 장착합니다 .

---

3. メールボックス (A) の後カバー(3) を取り外す。

4. ワイヤーサドル (4) を外す。
5. メールボックス (A) のコネクター(5) を機械本体のコネクター (6) に接続する。
6. ワイヤーサドル (4) を図の位置に取り付ける。
7. メールボックス (A) の後カバー(3) を元通りに取り付ける。

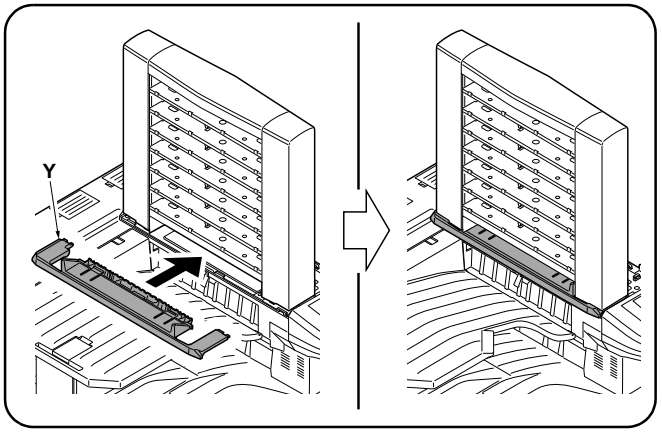

8. Install the left cover (Y) in place.

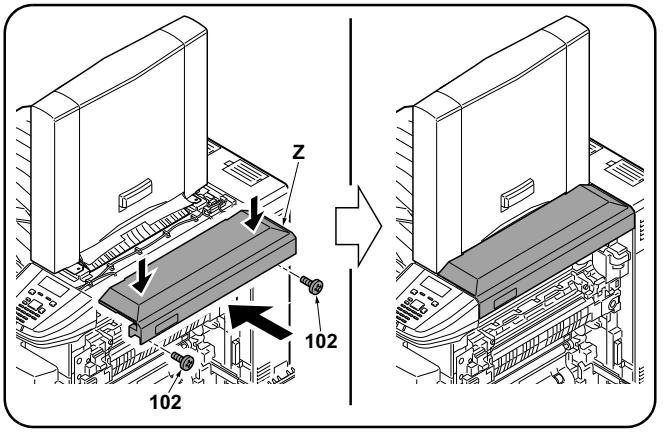

9. Using the two screws (102) removed in step 2 in the installation guide for the AK-736, install the right cover (Z).
*While pressing the right cover(Z) downwards, fix the right cover(J).

---

8. Monter le couvercle gauche (Y) en position.

9. À l'aide des deux vis (102) retirées à l'étape 2 du guide d'installation pour l'AK-736, installer le capot droit (Z).
*Fixer le capot droit (Z) en le maintenant enfoncé vers le bas.

---

8. Instale la cubierta izquierda (Y) en la ubicación prevista.

9. Con los dos tornillos (102) que quitó en el paso 2 de la guía de instalación para AK-736, instale la cubierta derecha (Z).
*A la vez que ejerce presión sobre la cubierta derecha (Z), fije la cubierta derecha (Z).

---

8. Installieren Sie die linke Abdeckung (Y).

9. Mit den zwei Schrauben (102), die Sie in Schritt 2 der Installationsanleitung für das AK-736 entfernt haben, bringen Sie die rechte Abdeckung (Z) wieder an.
*Drücken Sie die rechte Abdeckung (Z) leicht nach unten, während Sie diese befestigen.

---

8. Installare il coperchio di sinistra (Y) in posizione.

9. Utilizzando le due viti (102) rimosse al punto 2 della procedura descritta nella guida di installazione del kit AK-736, installare il coperchio destro (Z).
*Premere verso il basso il coperchio destro (Z) per fissarlo in posizione.

---

8. 将左盖板（Y）安装到位。

9. 请用 AK-736 安装手册步骤 2 中取下的 2 颗螺丝（102）来安装右盖板（Z）。
＊把右盖板（Z）边向下按，边固定。

---

8. 좌측 커버 (Y) 를 제자리에 장착합니다 .

9. AK-736 설치 설명서의 2 단계에서 분리한 나사 (102) 두 개를 사용하여 우측 커버 (Z) 를 장착합니다 .
＊우측 커버 (Z) 를 아래쪽으로 누르는 동시에 우측 커버 (Z) 를 고정하십시오 .

---

8. 左カバー(Y) を取り付ける。

9. AK-736 設置手順書の手順 2 で外したビス (102)2 本で、右カバー(Z) を取付ける。
＊右カバー(Z) を下方向に押さえながら、固定する。

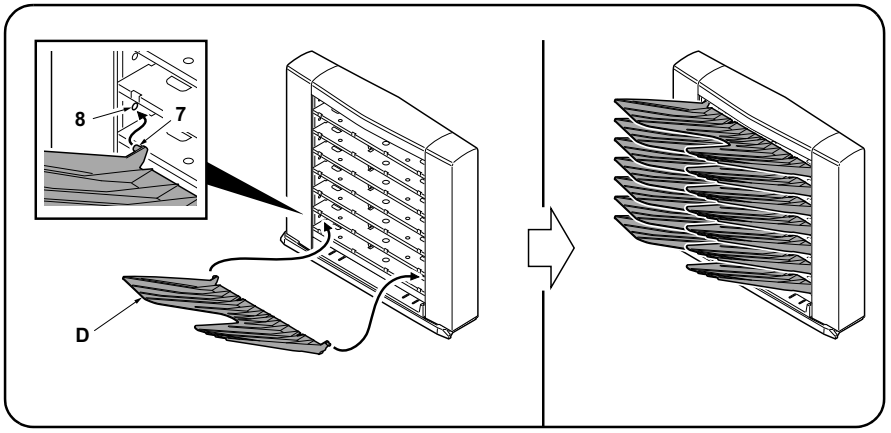

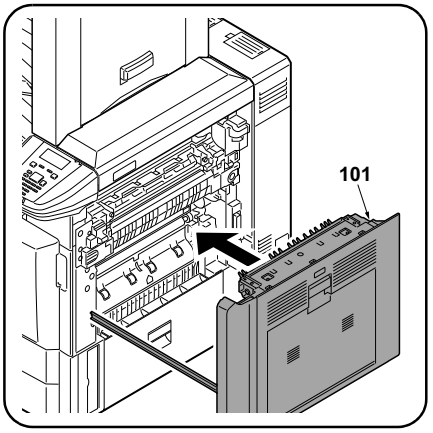

10. Fit the seven copy eject bins (D) to the ejection section of the mailbox (A) from the lowest bin to the highest.
Press both ends of each copy eject bin (D) to bend it a little, then fit the bin by inserting the front and rear pins (7) into the round holes (8) at the front and rear of the mailbox.

11. Close the paper conveying unit(101).
12. Insert the power plug from the machine into the outlet, turn the main power switch on, and verify the machine operates normally.

---

10. Fixer les sept cases d'éjection de copies (D) sur la section d'éjection de la boîte à lettres (A), en procédant de la case située tout en bas à celle située tout en haut.
Appuyer sur les deux extrémités de chaque case d'éjection des copies (D) pour cintrer légèrement cette pièce, puis monter la case en insérant les broches avant et arrière (7) dans les trous ronds (8) à l'avant et à l'arrière de la boîte à lettres.

11. Fermer l'unité de transport du papier (101).
12. Insérer la fiche d'alimentation de la machine dans la prise et mettre la machine sous tension, puis vérifier qu'elle fonctionne correctement.

---

10. Presione ambos extremos de cada bandeja de expulsión de copias (D) para doblarlas un poco; después, coloque la bandeja insertando los pasadores delantero y trasero (7) en los orificios redondos (8) en la parte frontal y posterior del buzón de correo.

11. Cierre la unidad de transporte de papel(101).
12. Enchufe el cable de alimentación de la máquina en la toma de corriente y encienda el interruptor principal para comprobar que la máquina funciona correctamente.

---

10. Setzen Sie die sieben Kopienausgabefächer (D) in die Ausgabeöffnungen der Mailbox (A) ein, beginnend vom untersten Fach zum höchsten.
Drücken Sie beide Enden jedes Kopienausgabefachs (D) zusammen, um es etwas zu biegen. Setzen Sie das Fach ein, indem Sie die vorderen und hinteren Stifte (7) in die Rundlöcher (8) vorne und hinten an der Mailbox einsetzen.

11. Schließen Sie die Papierführung (101).
12. Stecken Sie den Netzstecker des Geräts in eine Steckdose und schalten Sie den Hauptschalter des Geräts ein, um den Betrieb zu prüfen.

---

10. Installare i sette scomparti di espulsione delle copie (D) nella sezione di espulsione della mailbox (A), iniziando dallo scomparto più in basso fino a quello più in alto.
Premere le due estremità di ciascuno scomparto di espulsione delle copie (D) in modo da piegarlo leggermente, quindi installare lo scomparto inserendo i perni anteriore e posteriore (7) nei fori rotondi (8) presenti sul fronte e sul retro della mailbox.

11. Chiudere l'unità trasporto carta (101).
12. Inserire la spina nella presa di corrente, accendere la macchina e controllare che funzioni correttamente.

---

10. 从邮箱 (A) 的排出部下面起按顺序安装 7 个接纸盘 (D)。
按住接纸盘 (D) 的左右两侧并使其稍稍下垂，通过将前后的销钉 (7) 插入邮箱前后的圆孔 (8) 中来安装接纸盘。

11. 关闭纸张传输单元 (101)。
12. 将机器的电源插头插入插座，然后打开主电源开关并确认机器能否正常操作。

---

10. 배출핀 (D) 7 개를 메일박스 (A) 의 배출부에 밑에서부터 순서대로 장착합니다 .
배출핀 (D) 의 좌우를 밀어 조금 휘게해 앞뒤의 핀 (7) 을 메일박스의 앞뒤의 둥근 구멍 (8) 에 삽입합니다 .

11. 반송 유니트 (101) 를 닫습니다 .
12. 기기본체의 전원 플러그를 콘센트에 꼽고 주전원 스위치를 ON 으로 해서 동작을 확인 합니다 .

---

10. 排出ビン (D)7 枚をメールボックス (A) の排出部に下から順番に取り付ける。
排出ビン (D) の左右を押し少したわませ、前後のピン (7) をメールボックスの前後の丸穴 (8) に挿入する。

11. 搬送ユニット (101) を閉じる。
12. 機械本体の電源プラグをコンセントに差し込み、主電源スイッチを ON にして動作を確認する。



2020. 2
303N05673002

PF-7120

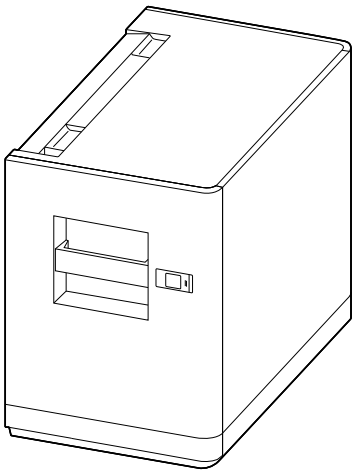

INSTALLATION GUIDE

GUIDE D'INSTALLATION

GUÍA DE INSTALACION

INSTALLATIONSANLEITUNG

GUIDA ALL'INSTALLAZIONE

安装手册

설치안내서

設置手順書

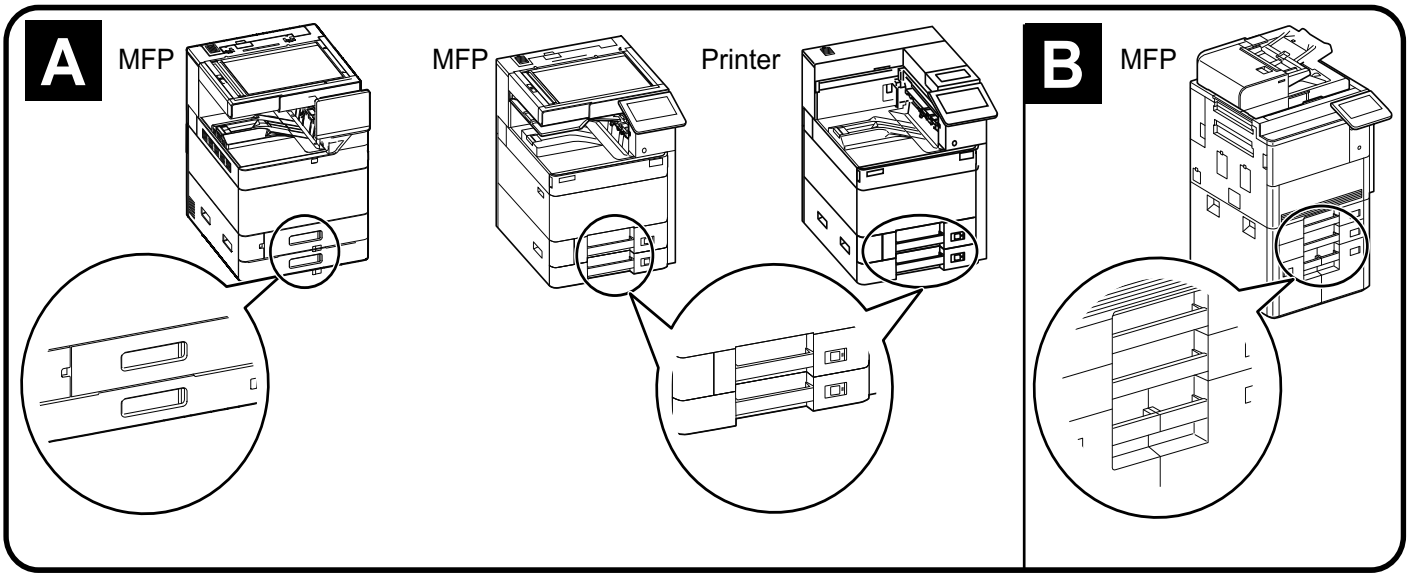

(EN) A different procedure is required depending on the product which is installed with this unit.Each procedure is described in the following pages.
For installation with the MFP(A) / Printer, see Page 1 to Page 10, Page 16 to Page 24.
For installation with a MFP(B), see Page 11 to Page 24.

(FR) Une procédure différente est requise selon le produit qui est installé avec cette unité.
Chaque procédure est décrite dans les pages suivantes.
Pour l'installation avec une imprimante multifonction(A) / Imprimante, voir Page 1 à Page 10, Page 16 à Page 24.
Pour l'installation avec une imprimante multifonction(B), voir Page 11 à Page 24.

(ES) El procedimiento es diferente según el producto que se instale con esta unidad.En las siguientes páginas, se describe cada procedimiento.
Para la instalación con un MFP(A) / Impresora, consulte las páginas de la 1 a la 10, páginas de la 16 a la 24.
Para la instalación con un MFP(B), consulte las páginas de la 11 a la 24.

(DE) Je nach verwendetem Modell ist eine andere Vorgehensweise zur Installation dieses Teils erforderlich.Die unterschiedlichen Vorgehensweisen werden auf den folgenden Seiten erläutert.
Bei Installation an einem MFP(A) / Drucker siehe Seiten 1 bis 10, Seiten 16 bis 24.
Bei Installation an einem MFP(B) siehe Seiten 11 bis 24.

(IT) Si richiede una procedura diversa in funzione del prodotto su cui è installata l'unità.Le singole procedure sono descritte nelle pagine seguenti.
Per l'installazione con un MFP(A) / stampante, vedere le pagine da 1 a 10, pagine da 16 a 24.
Per l'installazione con un MFP(B), vedere le pagine da 11 a 24.

(ZHCN) 根据安装对象，安装步骤略有不同。各个步骤记载在下面的页面。
安装到MFP(A)/打印机上时，请参见P1-P10,P16-P24。
安装到MFP(B)上时，请参见P11-P24。

(KO) 이 장치에 설치되는 제품에 따라 절차가 다릅니다.다음 페이지에서 각 절차를 설명합니다.
MFP(A)/프린터에 설치하는 경우 1페이지~10페이지,16페이지~24페이지를 참조하십시오.
MFP(B)에 설치하는 경우 11페이지~24페이지를 참조하십시오.

(JA) 装着する対象によって、取付手順は異なります。それぞれ、以下のページに記載しています。
MFP(A)/プリンターに設置する場合；1ページ～10ページ、16ページ～24ページ
MFP(B)に設置する場合；11ページ～24ページ

A

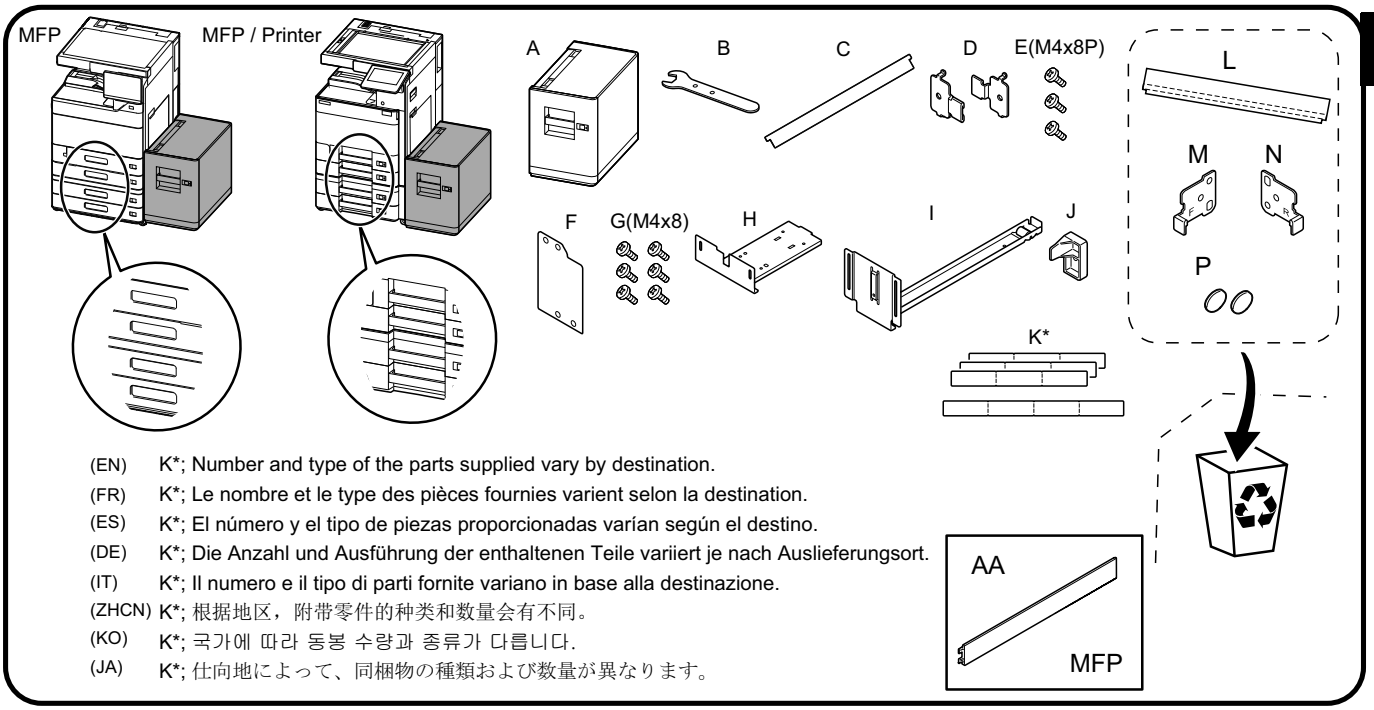

(EN) K*; Number and type of the parts supplied vary by destination.
(FR) K*; Le nombre et le type des pièces fournies varient selon la destination.
(ES) K*; El número y el tipo de piezas proporcionadas varían según el destino.
(DE) K*; Die Anzahl und Ausführung der enthaltenen Teile variiert je nach Auslieferungsort.
(IT) K*; Il numero e il tipo di parti fornite variano in base alla destinazione.
(ZHCN) K*; 根据地区，附带零件的种类和数量会有不同。
(KO) K*; 국가에 따라 동봉 수량과 종류가 다릅니다.
(JA) K*; 仕向地によって、同梱物の種類および数量が異なります。

(EN) Be sure to remove any tape and/or cushioning materials from the parts supplied.
(FR) Veillez à retirer les morceaux de bande adhésive et/ou les matériaux de rembourrage des pièces fournies.
(ES) Asegúrese de quitar todas las cintas y/o material amortiguador de las partes suministradas.
(DE) Stellen Sie sicher, dass sämtliche Klebebänder und/oder Polstermaterial von den gelieferten Teilen entfernt wurden.
(IT) Rimuovere tutti i nastri adesivi e/o i materiali di protezione dalle parti fornite.
(ZHCN) 如果附属品上带有固定胶带、缓冲材料时，请务必揭下。
(KO) 동봉품에 고정 테이프 , 완충재가 붙어 있는 경우에는 반드시 제거하십시오.
(JA) 同梱品に固定テープ、緩衝材がついている場合は、必ず取り外すこと。

(EN) While the illustrations in this installation guide are for the MFP models, contents of the installation work are common for the MFP and printer models.
(FR) Les illustrations de ce guide d' installation concernent les modèles MFP, mais les interventions d' installation sont communes aux modèles MFP et imprimantes.
(ES) Aunque las ilustraciones de esta guía de instalación hacen referencia a los modelos MFP, el contenido de los procedimientos de instalación es el mismo para los modelos MFP y de impresora.
(DE) Obwohl die Abbildungen in dieser Installationsanleitung sich auf MFPs beziehen, ist die Vorgehensweise für MFPs und Drucker die gleiche.
(IT) Sebbene le illustrazioni contenute in questa guida di installazione siano relative a modelli MFP, i contenuti della procedura di installazione sono gli stessi per MFP e stampanti.
(ZHCN) 安装步骤中的视图是 MFP 机型，不过 MFP 和打印机的安装步骤是相同的。
(KO) 이 설치 가이드는 MFP모델용이지만, 설치 작업은 MFP와 프린터 공통입니다.
(JA) 設置手順書内のイラストは、MFP ですが、設置作業は MFP/ プリンター共通です。

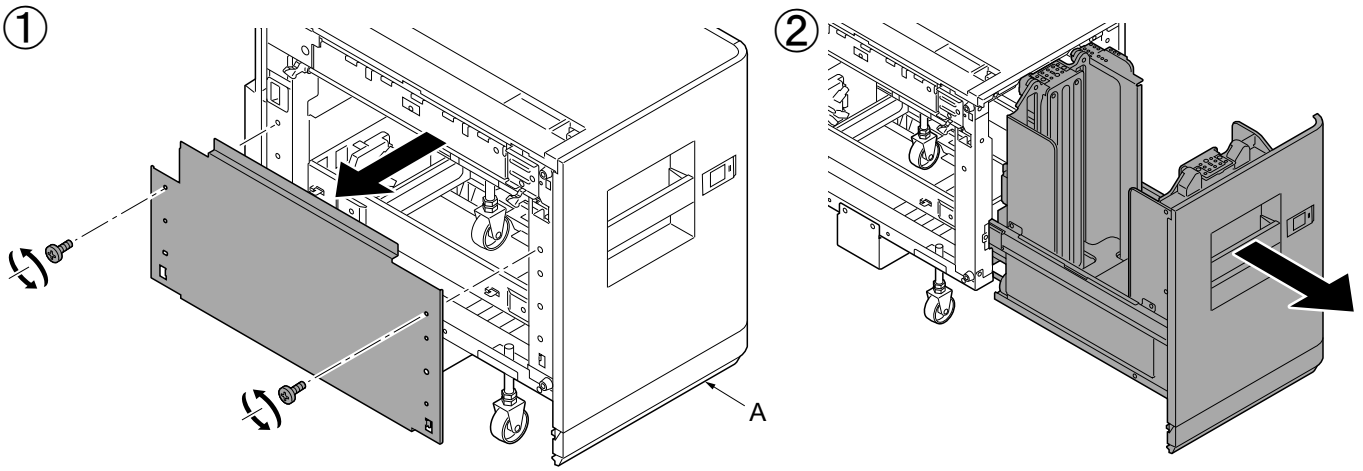

A

③

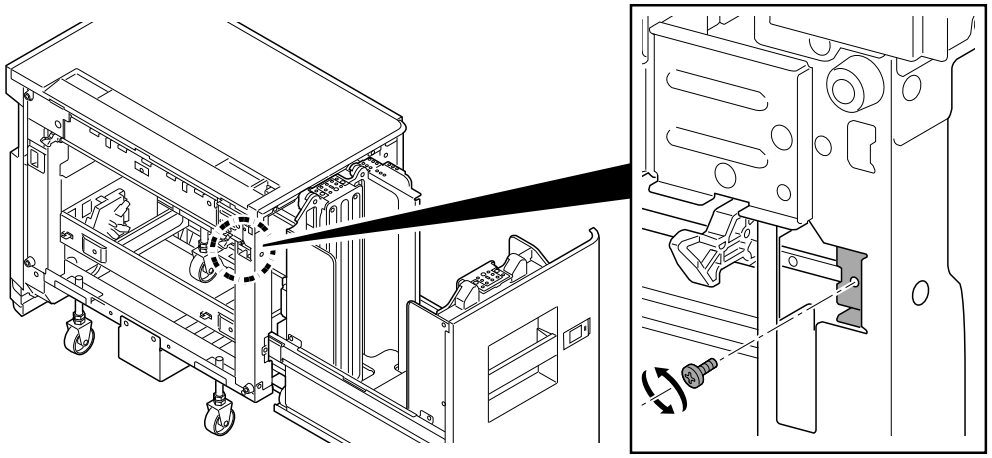

④

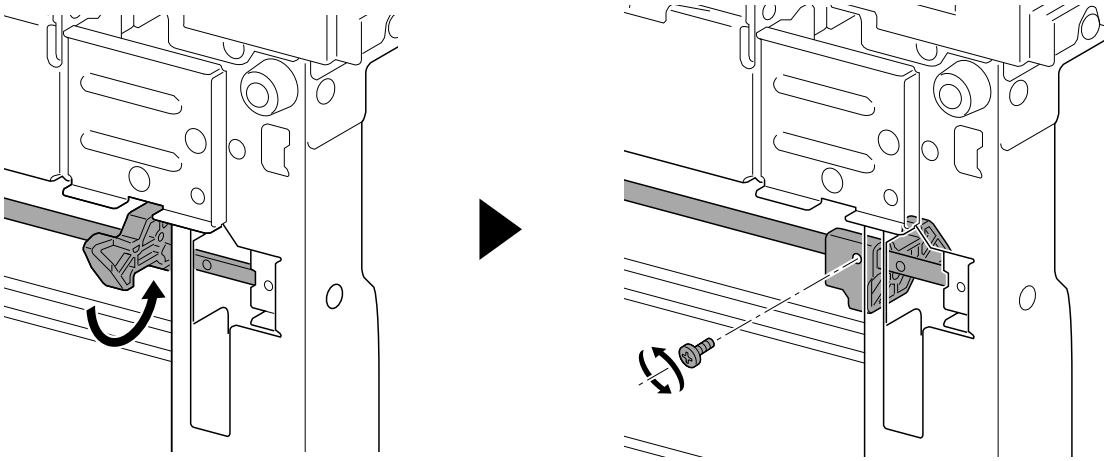

⑤

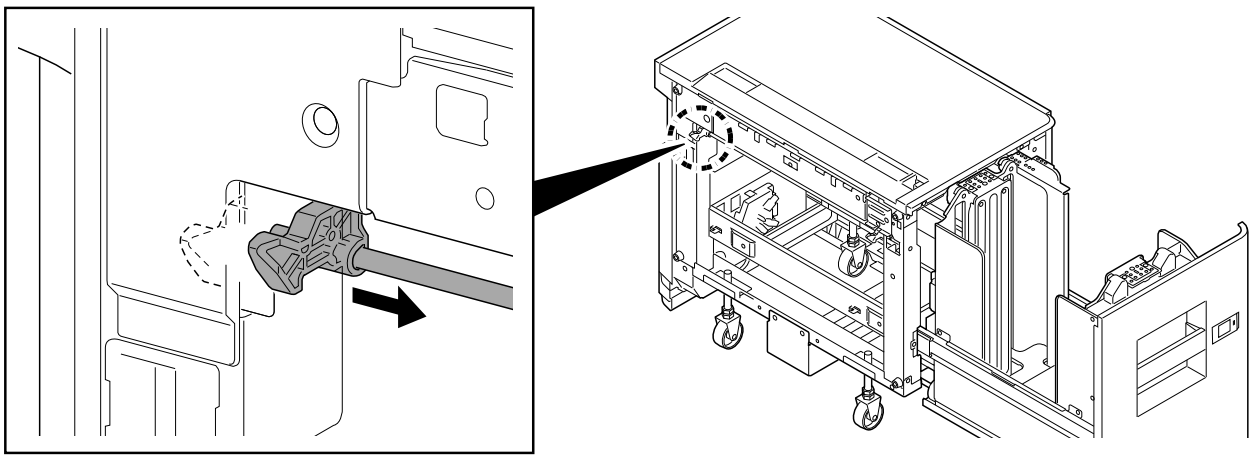

⑥

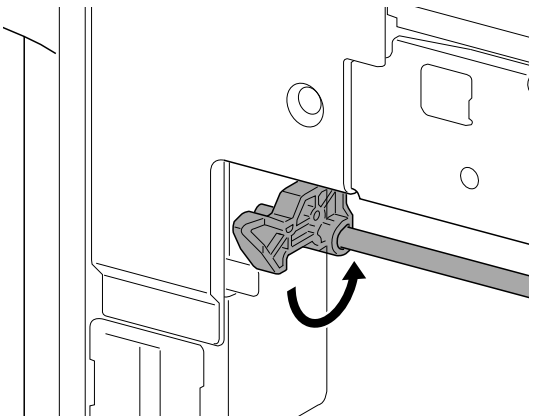

⑦

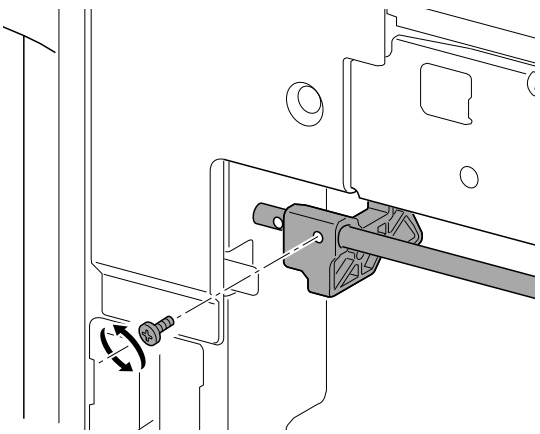

A

⑧

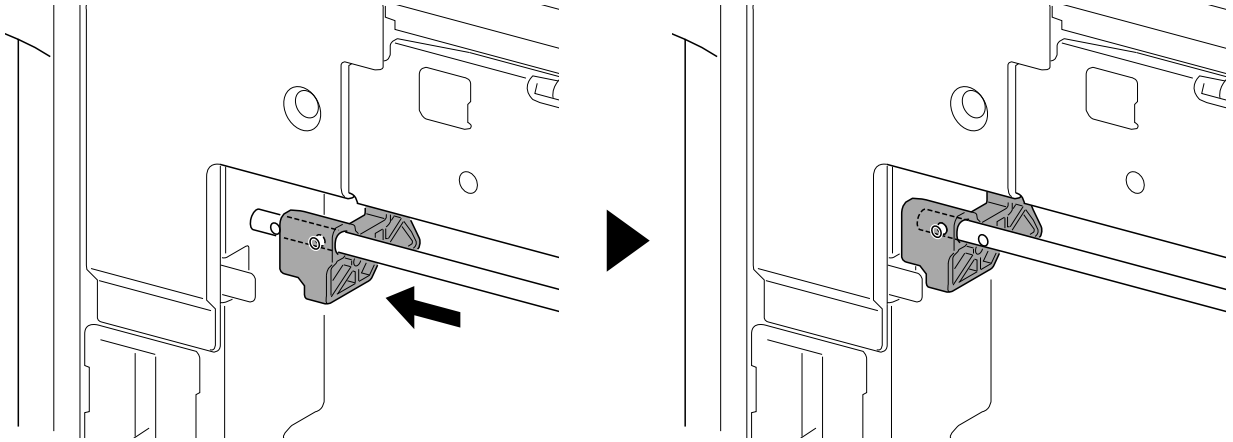

⑨

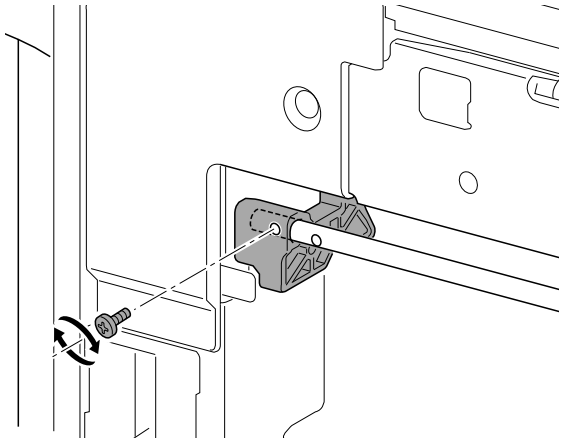

⑩

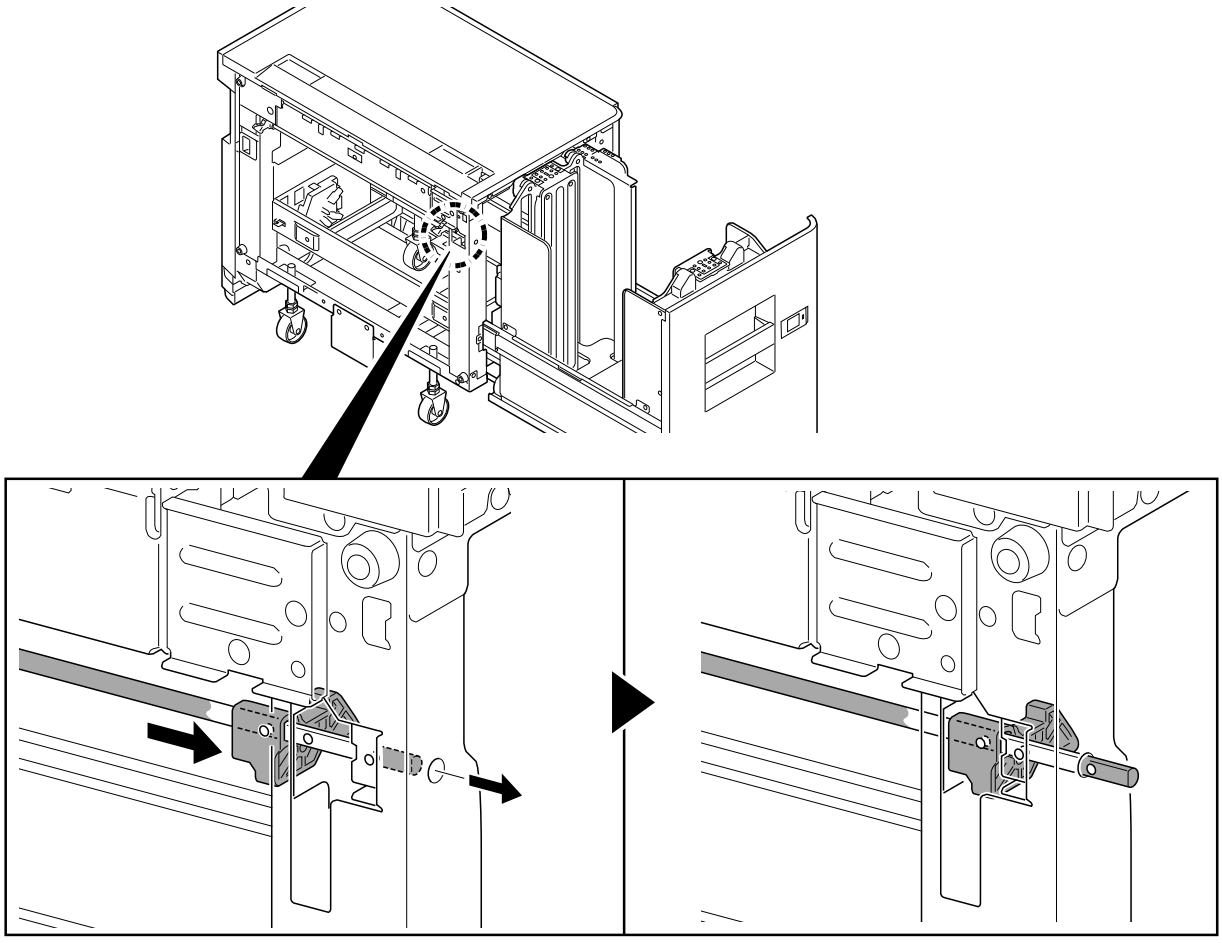

A

⑪

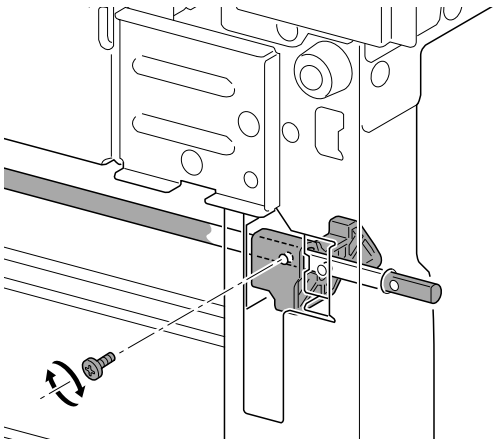

⑫

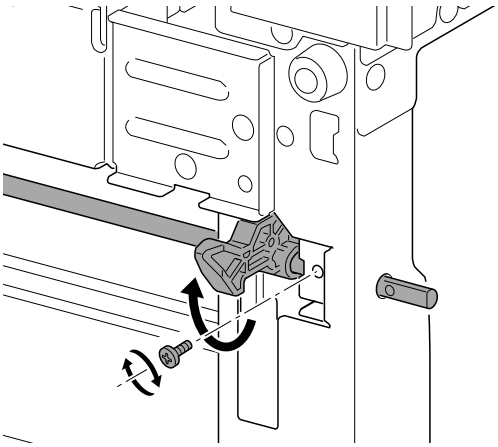

⑬

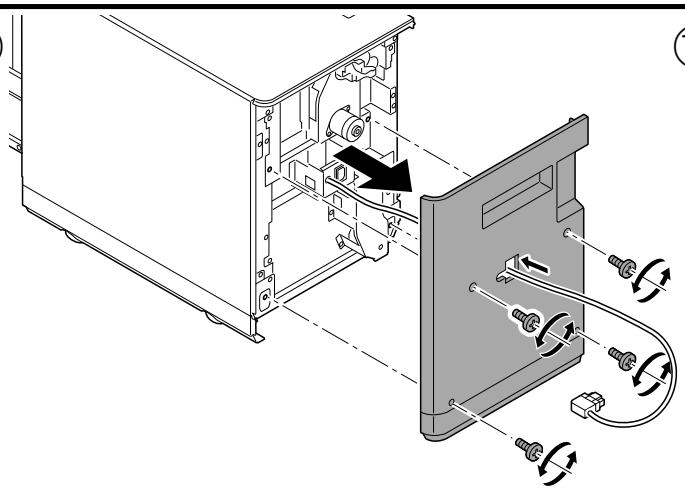

⑭

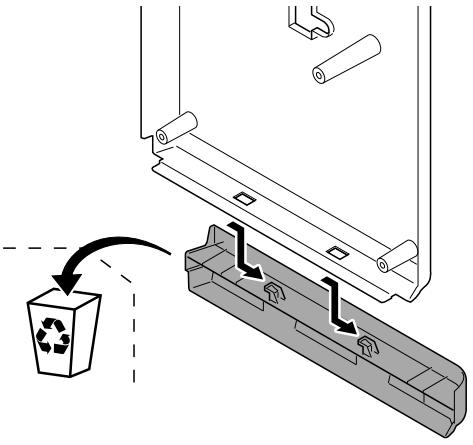

⑮

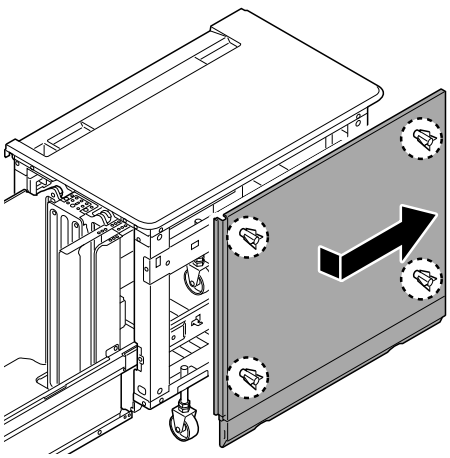

⑯

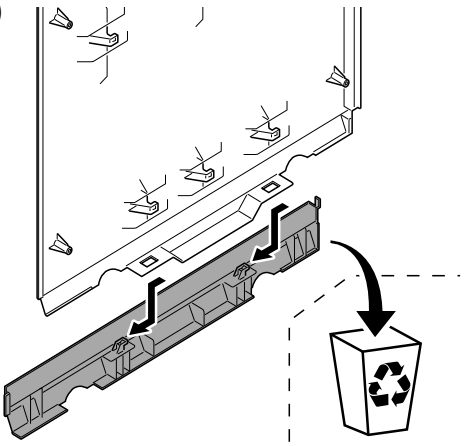

⑰

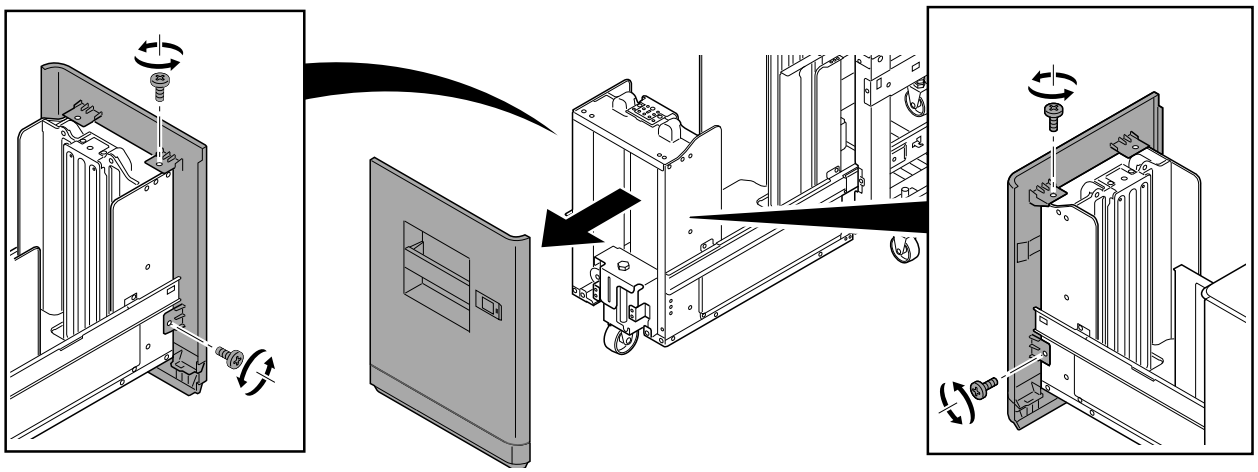

A

⑱

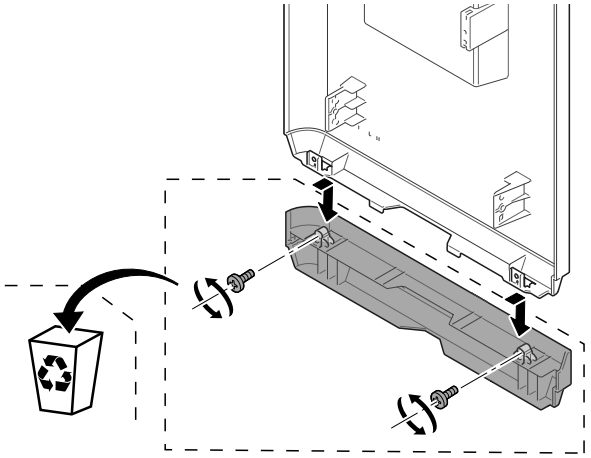

⑲

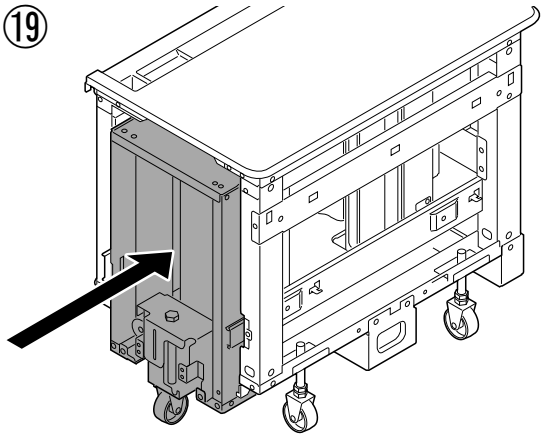

⑳

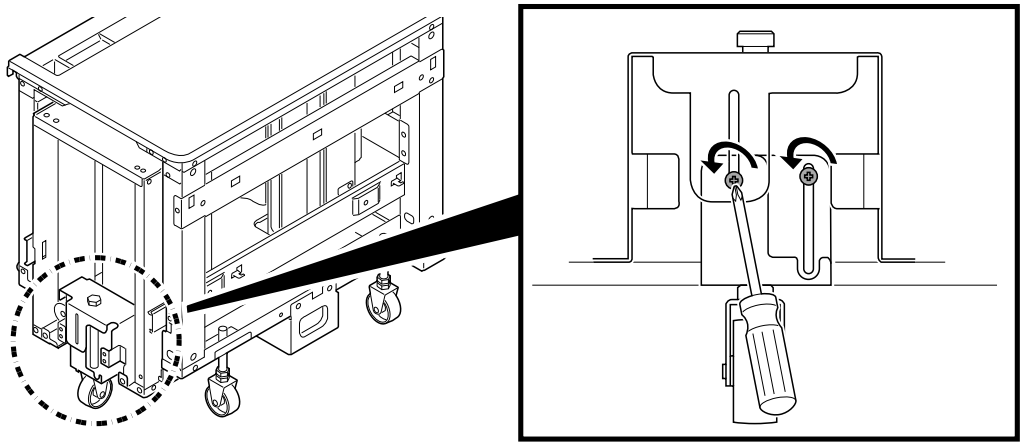

㉑

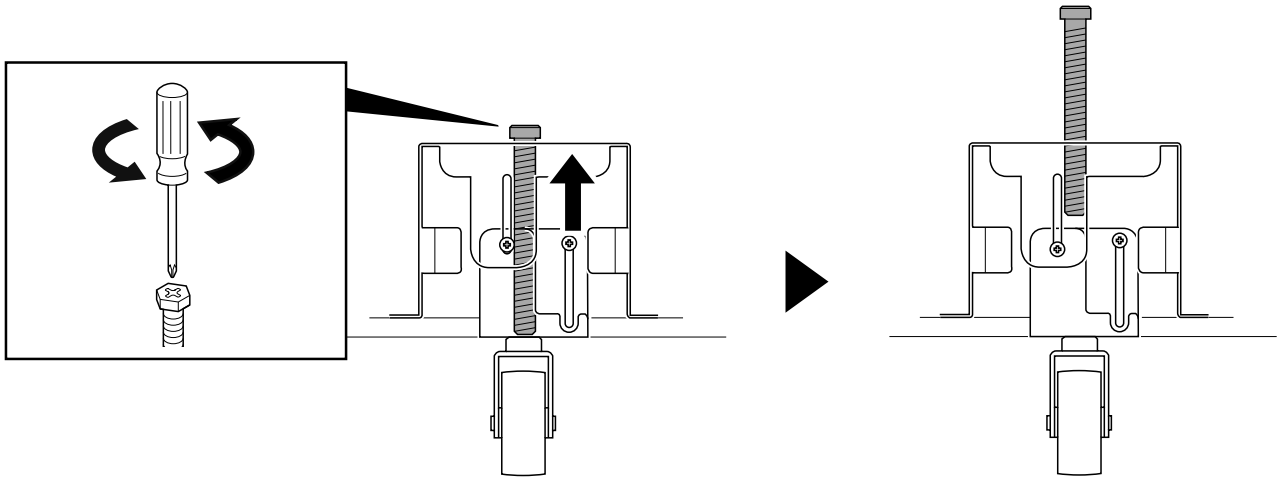

A

㉒

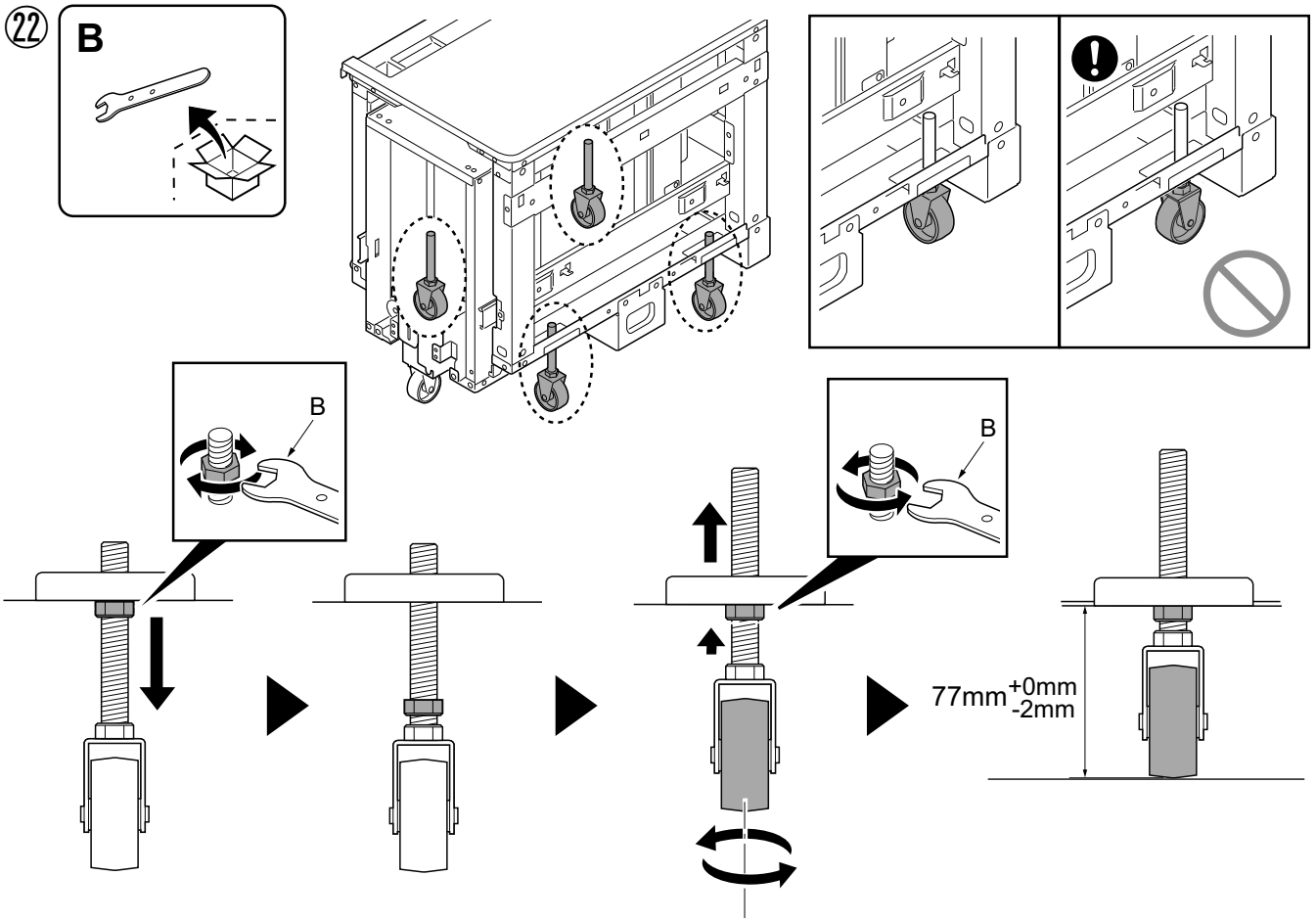

㉓

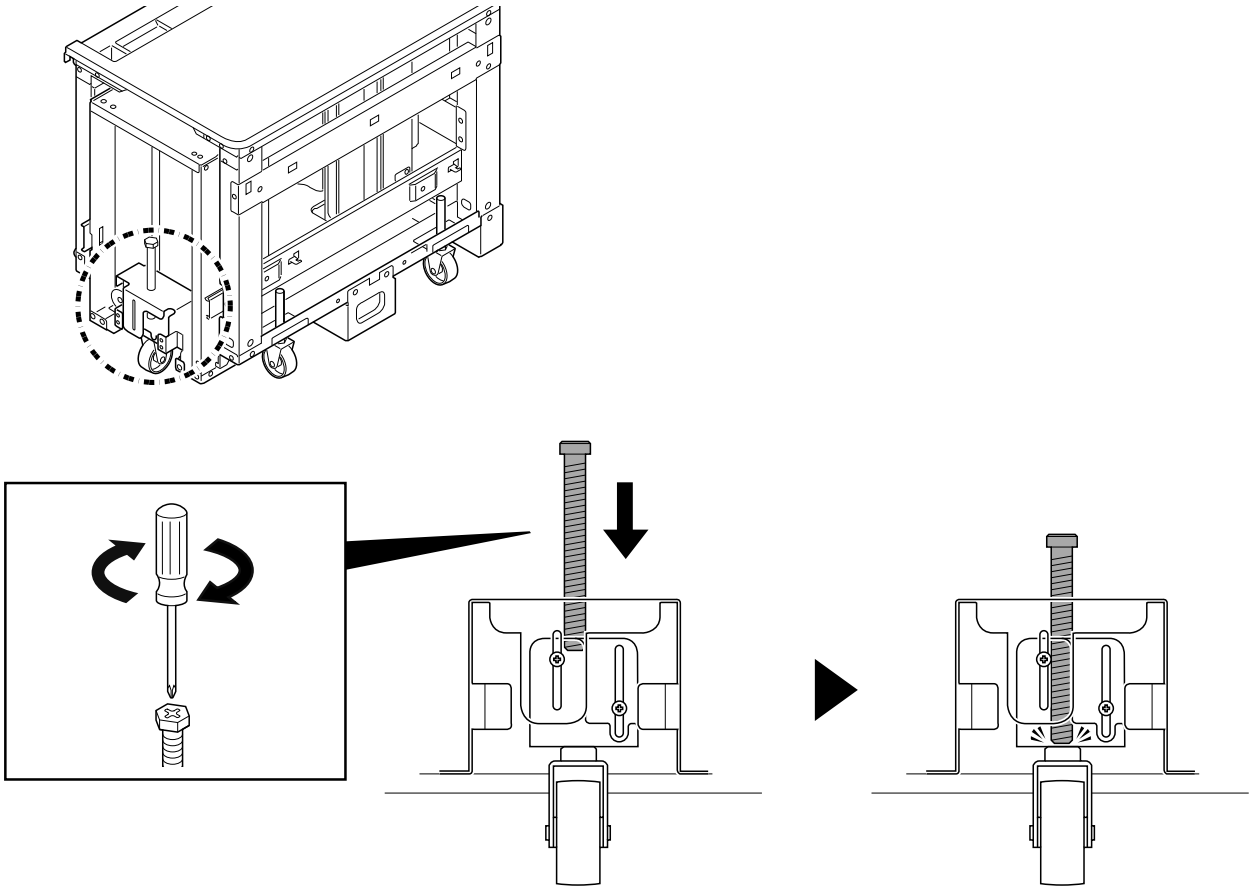

A

㉔

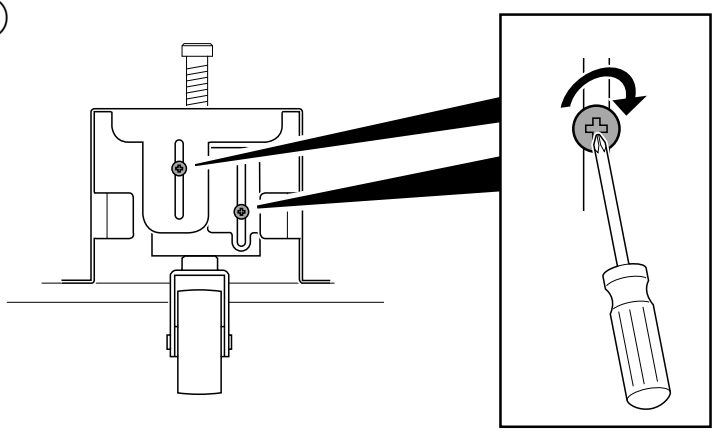

㉕

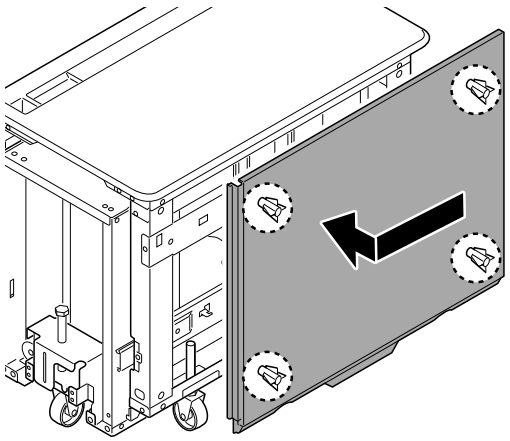

㉖

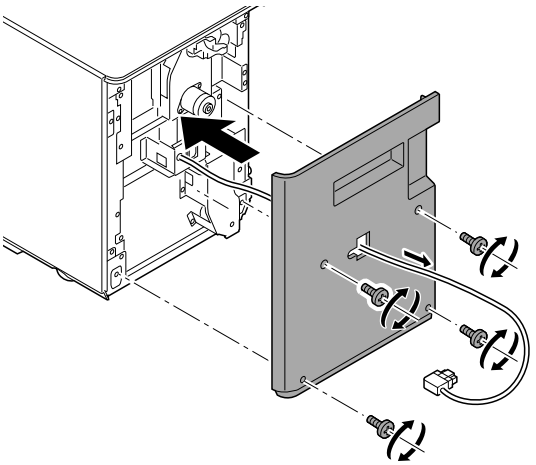

㉗

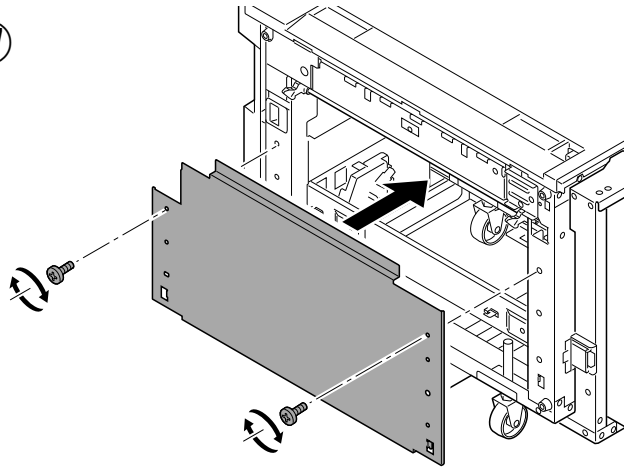

㉘

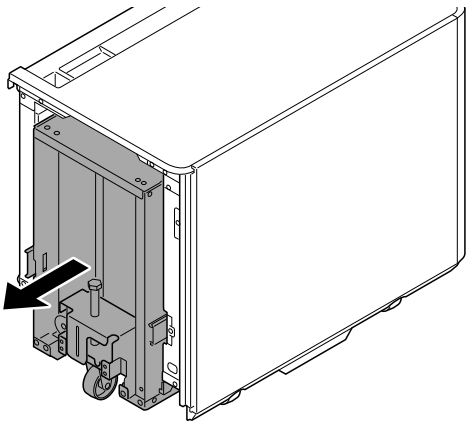

㉙

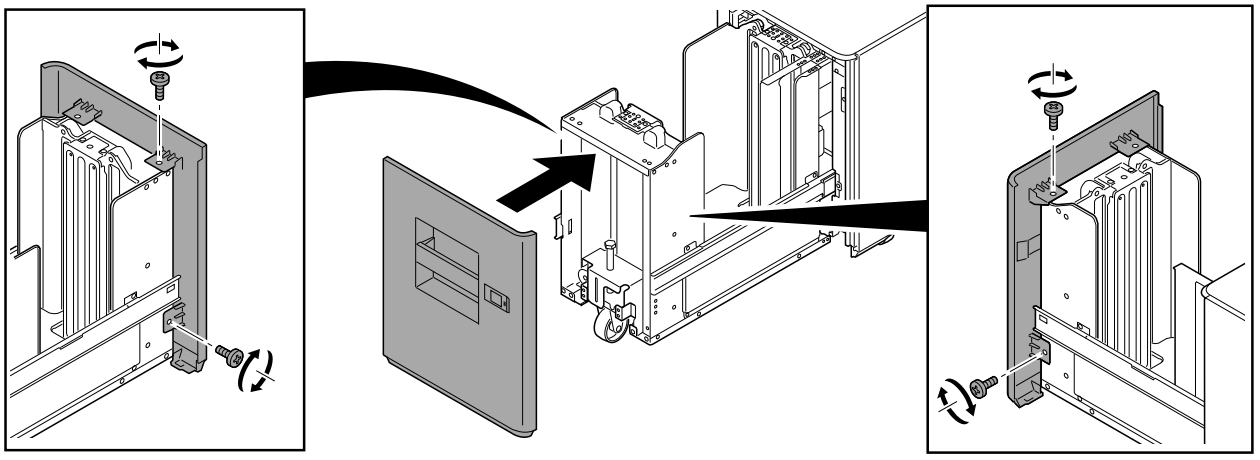

A

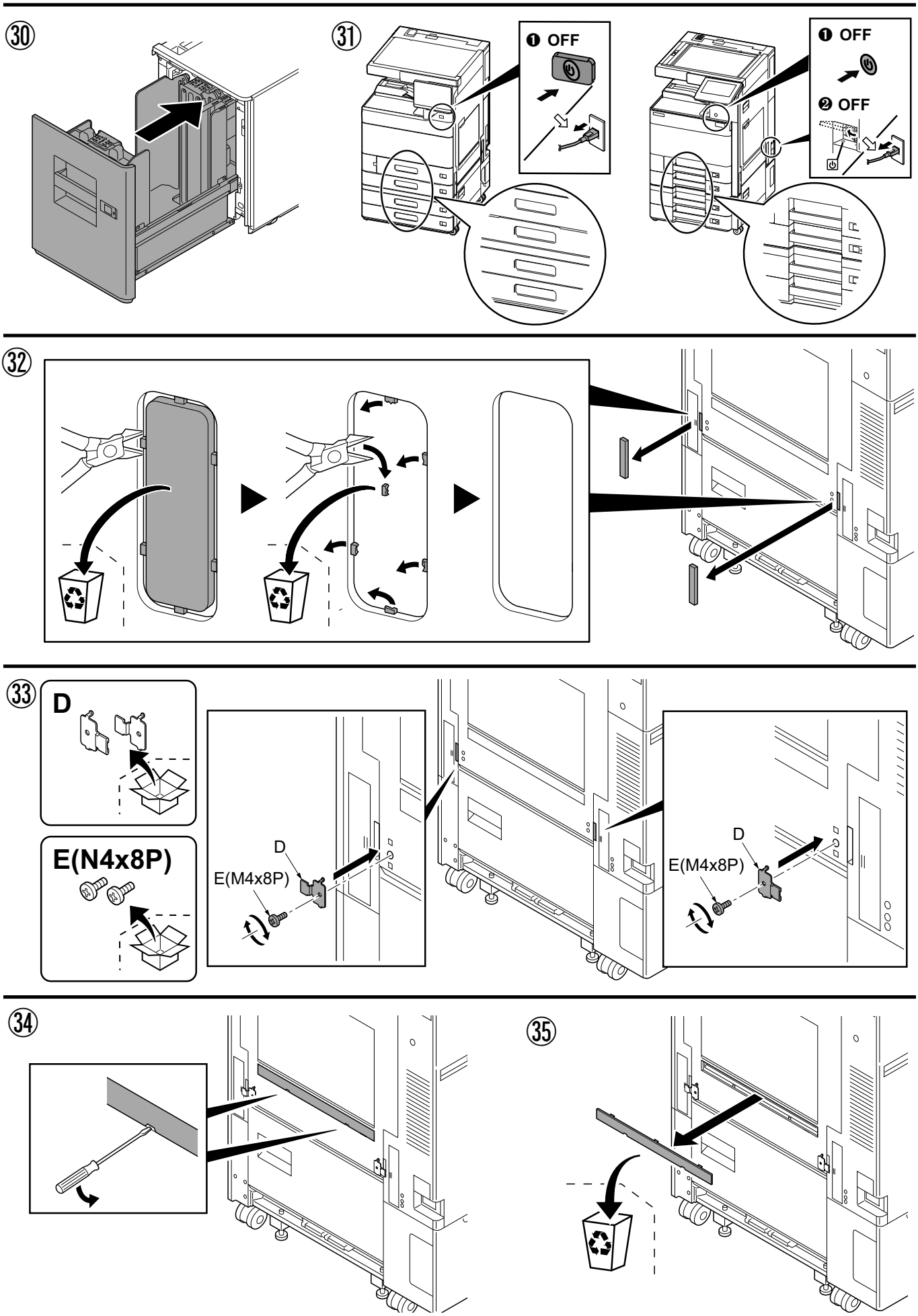

A

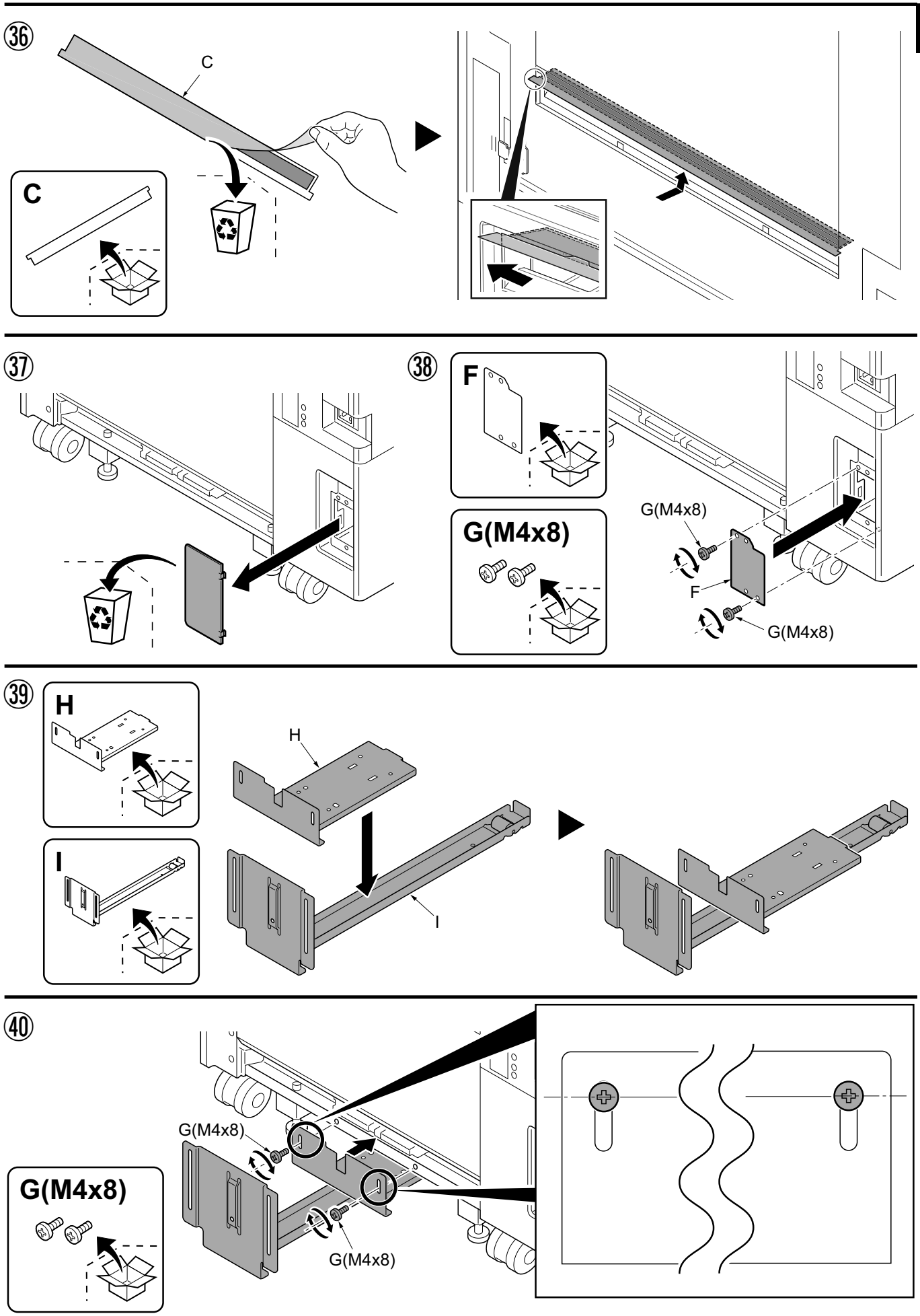

A

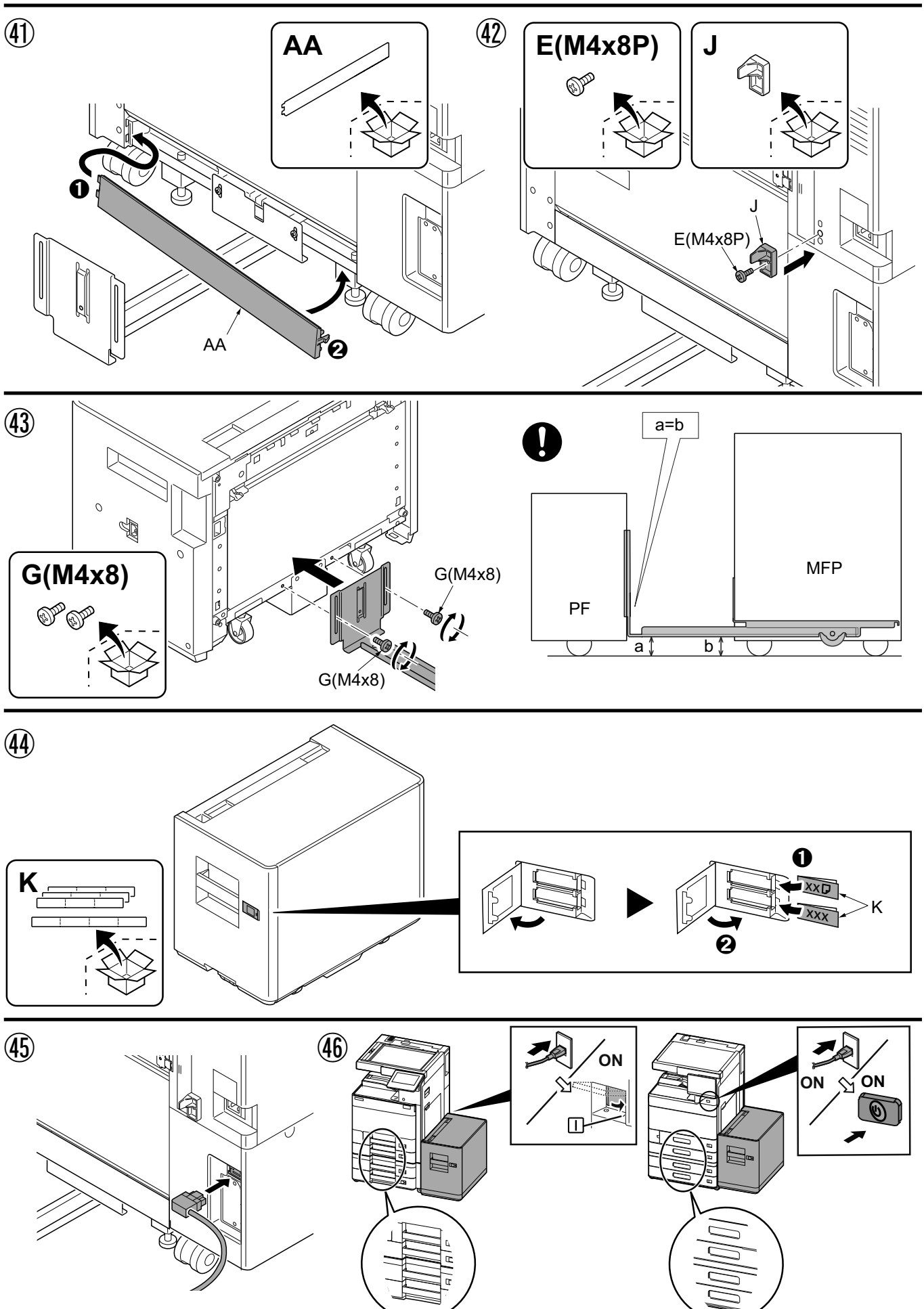
41
AA
AA
42
E(M4x8P)
J
J
E(M4x8P)
43
G(M4x8)
G(M4x8)
G(M4x8)
a=b
MFP
PF
a
b
44
K
K
XXX
XXX
45
46
ON
ON
ON

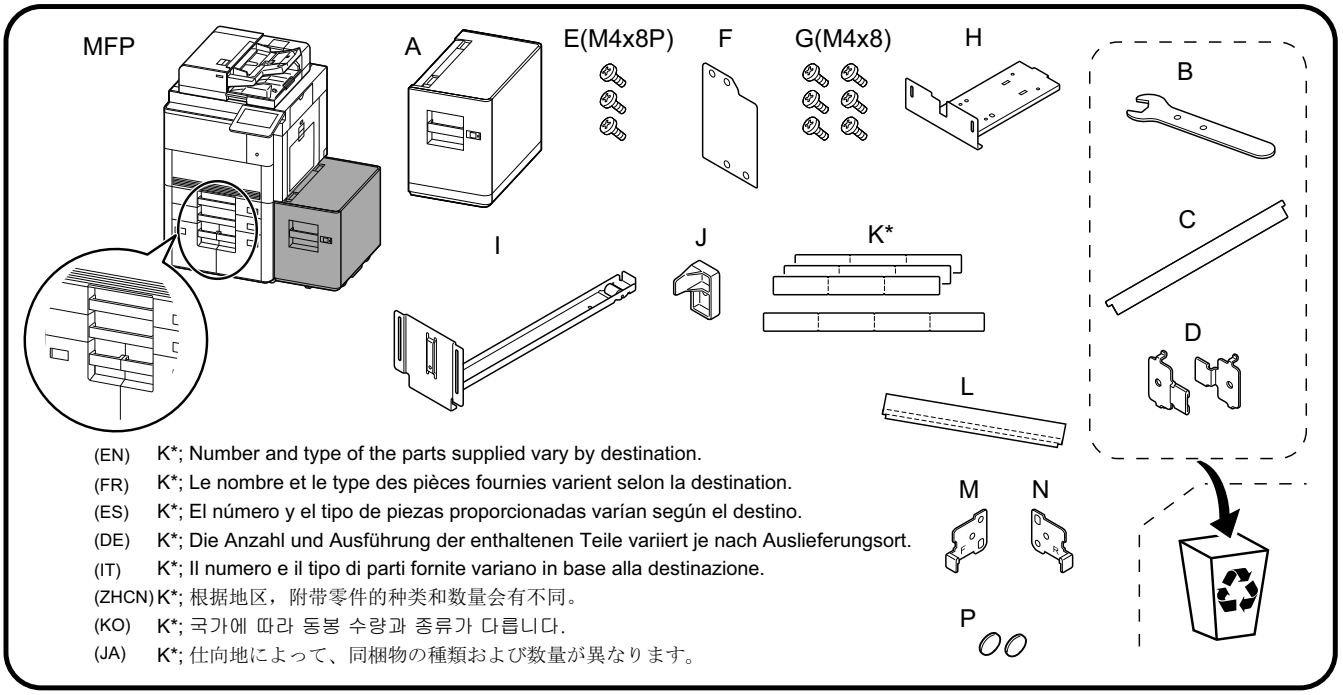

(EN) K*; Number and type of the parts supplied vary by destination.
(FR) K*; Le nombre et le type des pièces fournies varient selon la destination.
(ES) K*; El número y el tipo de piezas proporcionadas varían según el destino.
(DE) K*; Die Anzahl und Ausführung der enthaltenen Teile variiert je nach Auslieferungsort.
(IT) K*; Il numero e il tipo di parti fornite variano in base alla destinazione.
(ZHCN) K*; 根据地区，附带零件的种类和数量会有不同。
(KO) K*; 국가에 따라 동봉 수량과 종류가 다릅니다.
(JA) K*; 仕向地によって、同梱物の種類および数量が異なります。

(EN) Be sure to remove any tape and/or cushioning materials from the parts supplied.
(FR) Veillez à retirer les morceaux de bande adhésive et/ou les matériaux de rembourrage des pièces fournies.
(ES) Asegúrese de quitar todas las cintas y/o material amortiguador de las partes suministradas.
(DE) Stellen Sie sicher, dass sämtliche Klebebänder und/oder Polstermaterial von den gelieferten Teilen entfernt wurden.
(IT) Rimuovere tutti i nastri adesivi e/o i materiali di protezione dalle parti fornite.
(ZHCN) 如果附属品上带有固定胶带、缓冲材料时，请务必揭下。
(KO) 동봉품에 고정 테이프 , 완충재가 붙어 있는 경우에는 반드시 제거하십시오.
(JA) 同梱品に固定テープ、緩衝材がついている場合は、必ず取り外すこと。

①

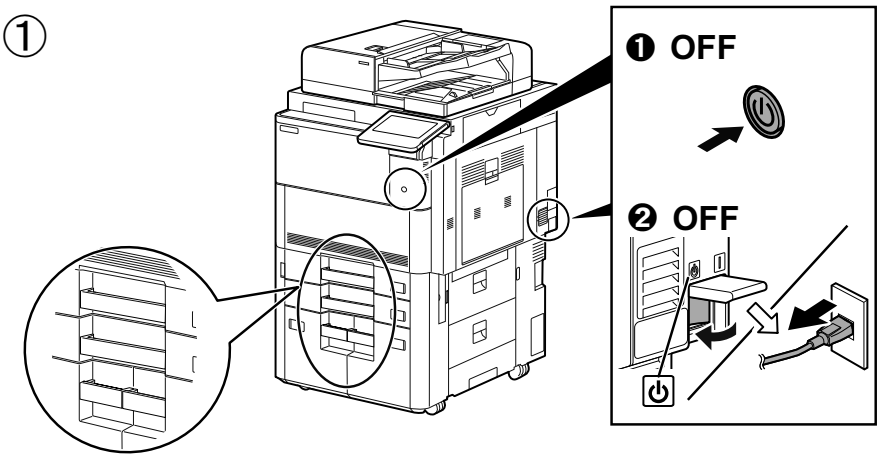

②

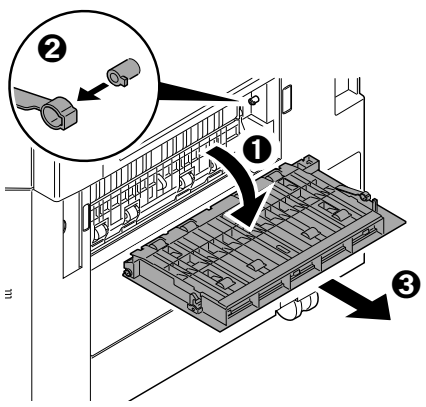

③

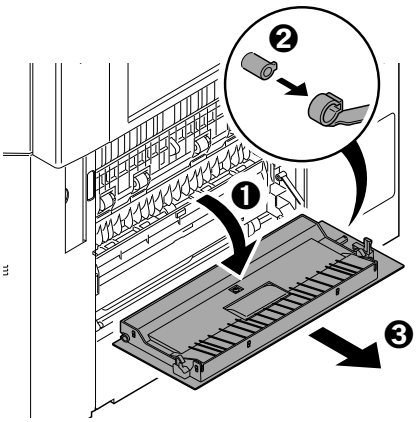

B

④

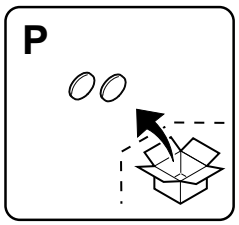

(EN) Affix the seals (P) to cover the screw heads after cleaning there with alcohol.
(FR) Fixer les joints (P) afin de couvrir les têtes de vis après avoir nettoyé à l'alcool.
(ES) Después de limpiar la zona con alcohol, coloque los precintos (P) para cubrir las cabezas de los tornillos.
(DE) Bringen Sie die Dichtungen (P) an, um die Schraubenköpfe abzudecken, nachdem Sie sie mit Alkohol gereinigt haben.
(IT) Applicare i sigilli (P) per coprire le teste delle viti dopo aver pulito con alcol.
(ZHCN) 酒精清洁后，把贴片（P) 粘贴到螺丝头部。
(KO) 알코올로 청소 후, 나사머리를 덮도록 씰(P)를 붙입니다.
(JA) アルコール清掃後、ビスの頭を覆うように、シール (P) を貼り付けます。

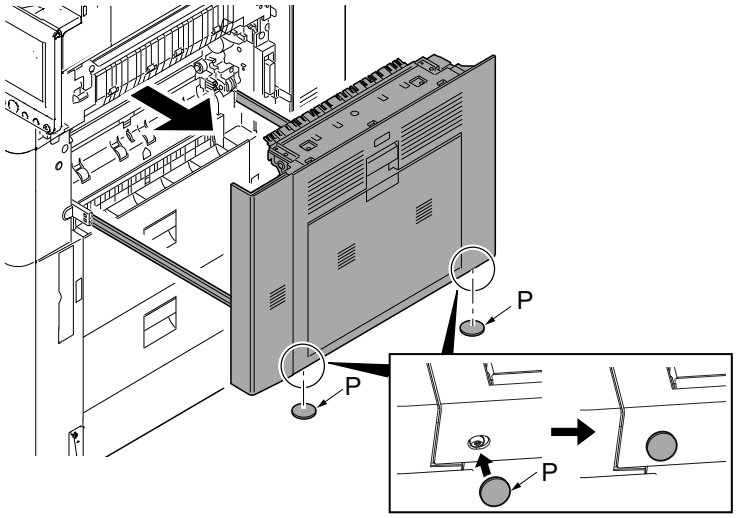

⑤

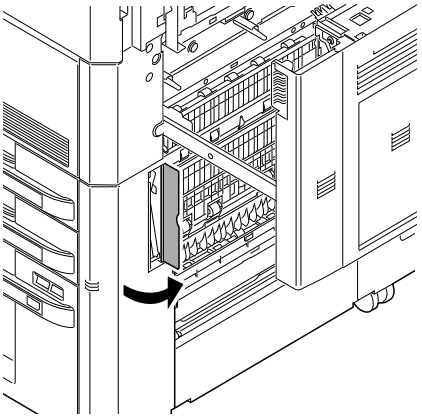

⑥

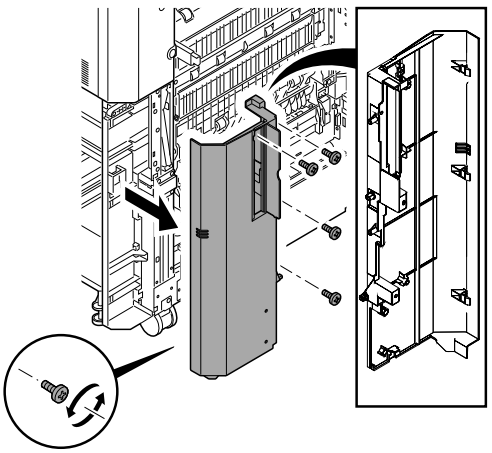

⑦

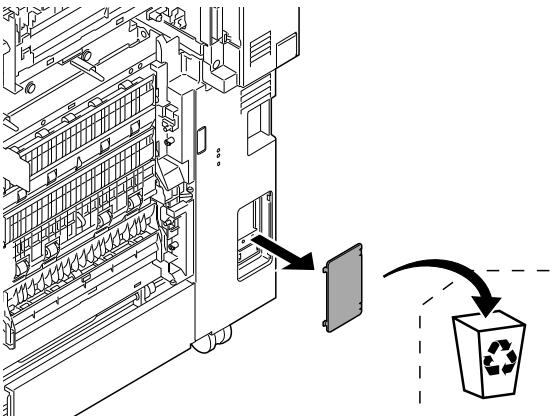

⑧

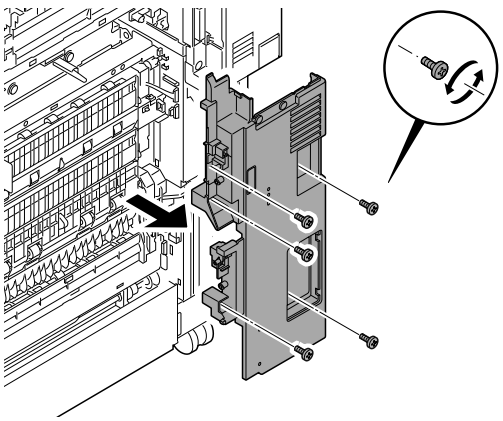

⑨

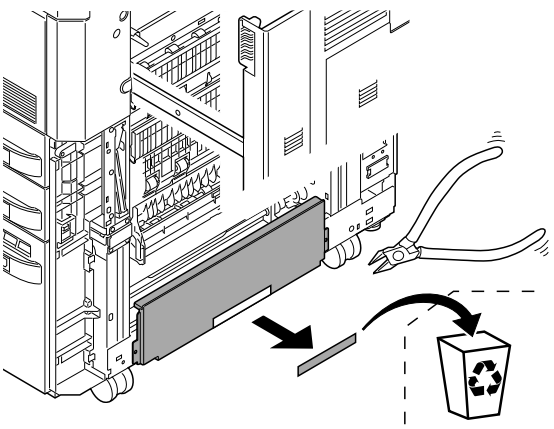

B

⑩

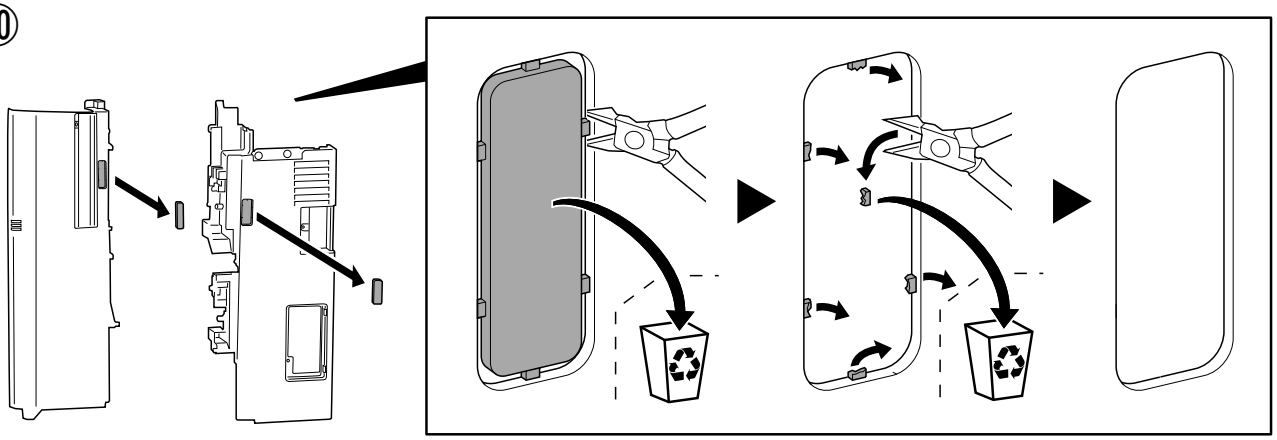

⑪

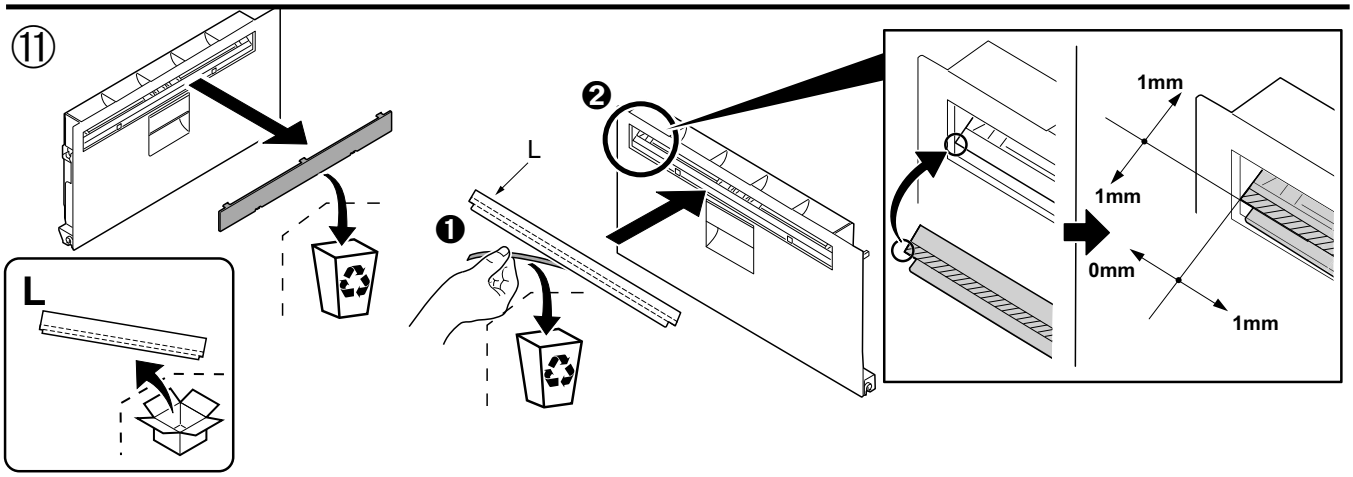

⑫

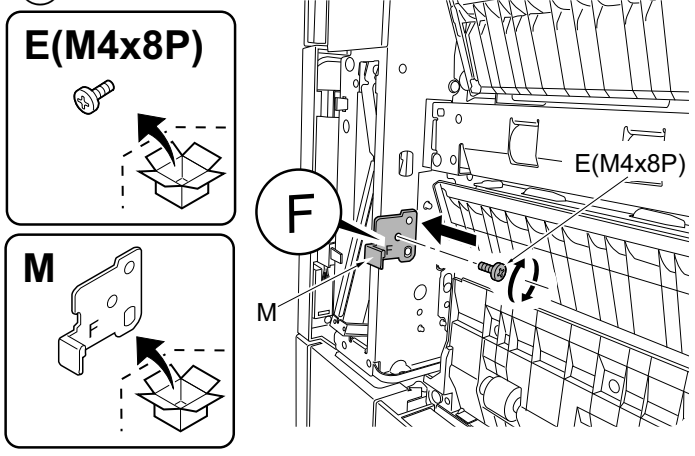

⑬

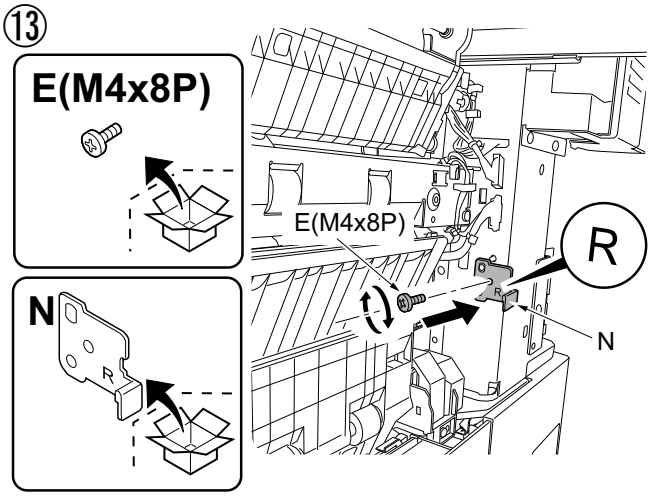

⑭

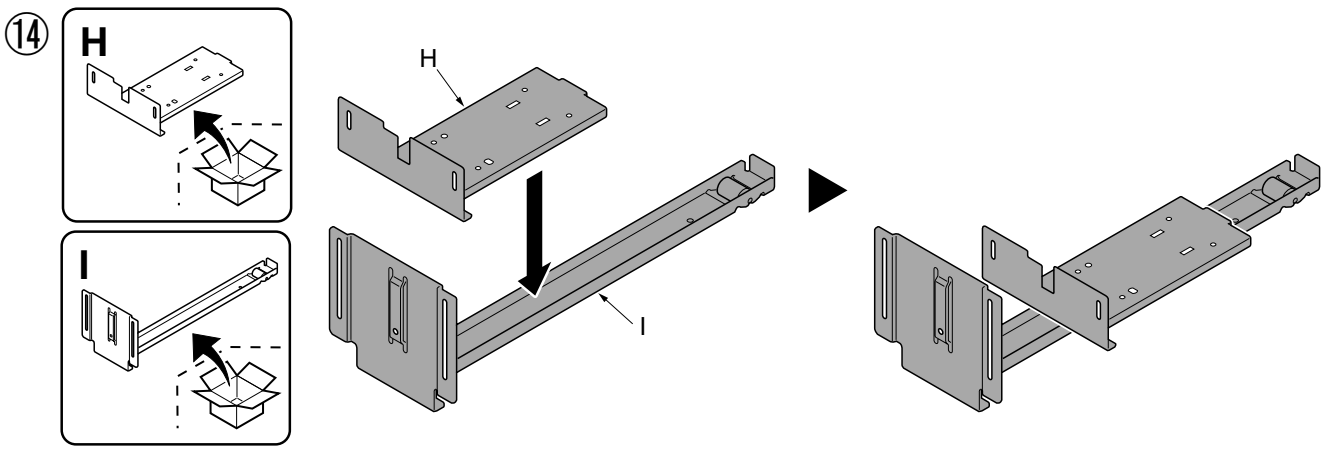

B

⑮

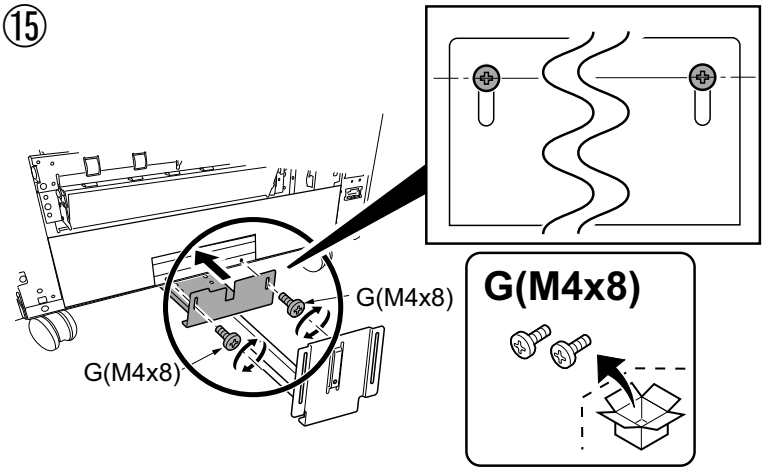
G(M4x8)
G(M4x8)
G(M4x8)

⑯

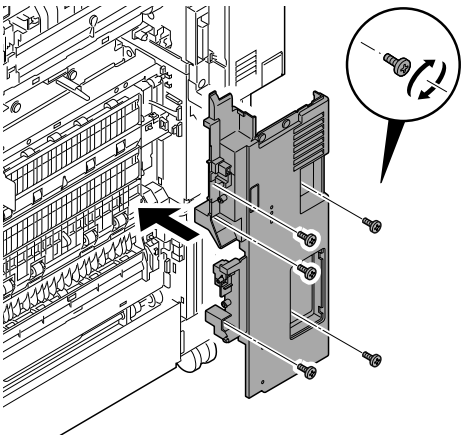

⑰

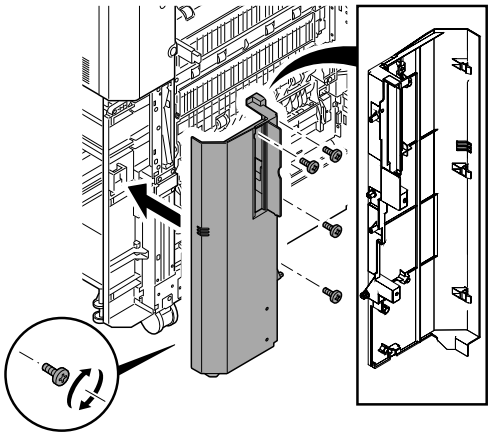

⑱

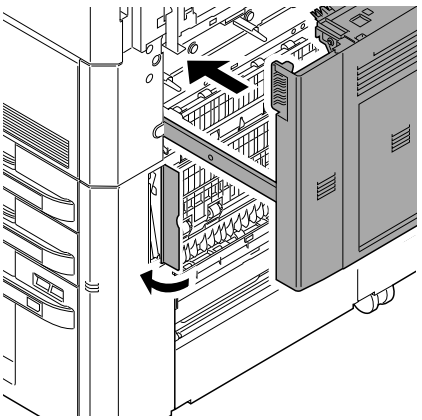

⑲

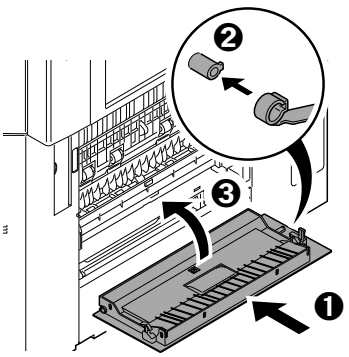
❷
❸
❶

⑳

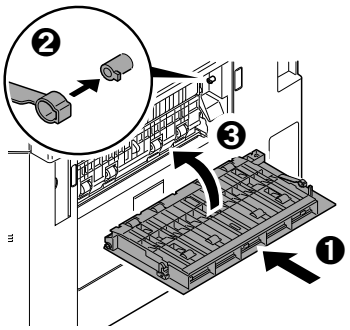
❷
❸
❶

㉑

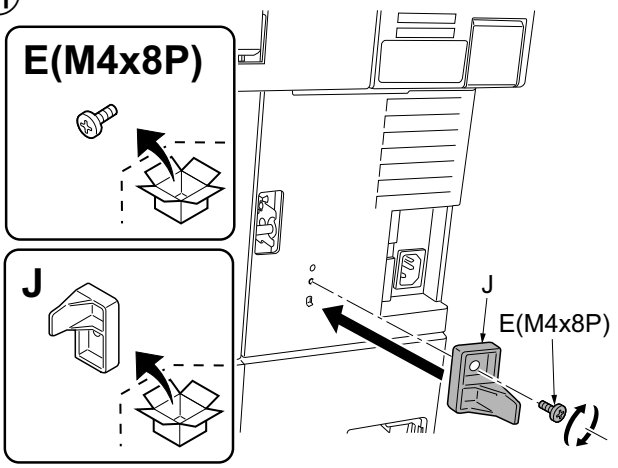
E(M4x8P)
J
J
E(M4x8P)

㉒

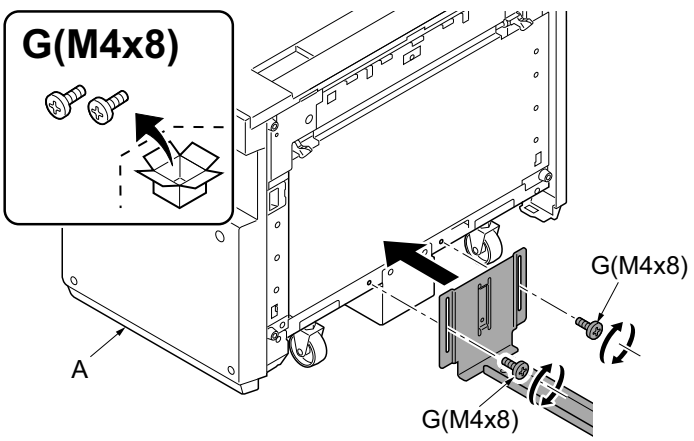
G(M4x8)
G(M4x8)
A
G(M4x8)

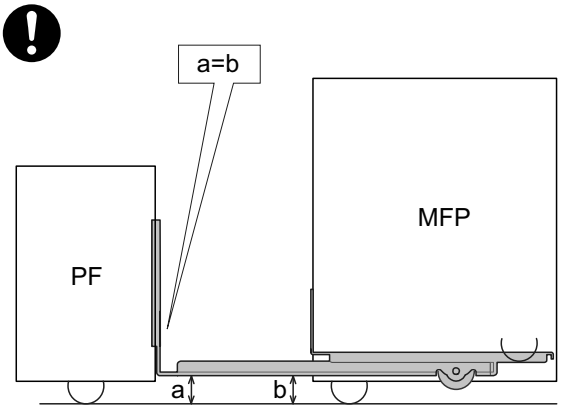
a=b
PF
MFP
a
b

B

㉓

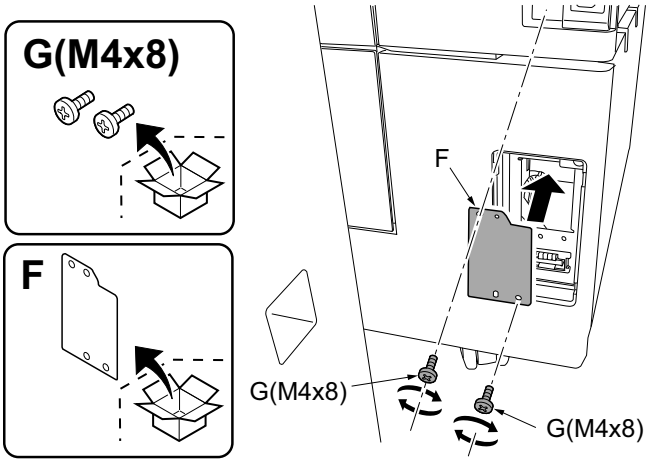

㉔

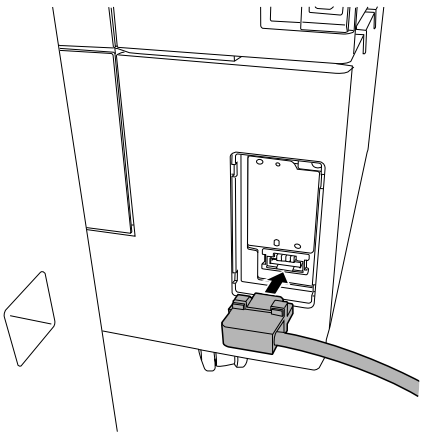

㉕

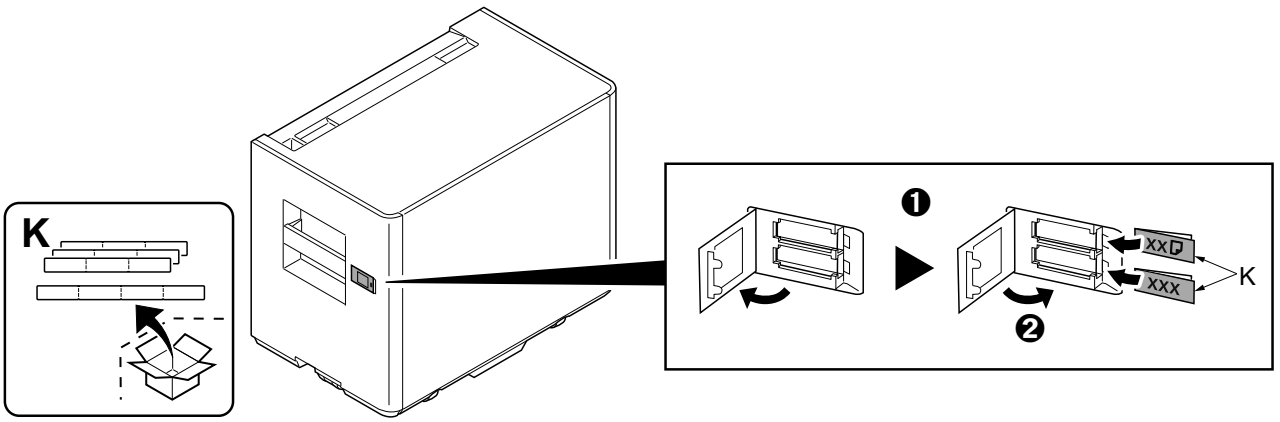

㉖

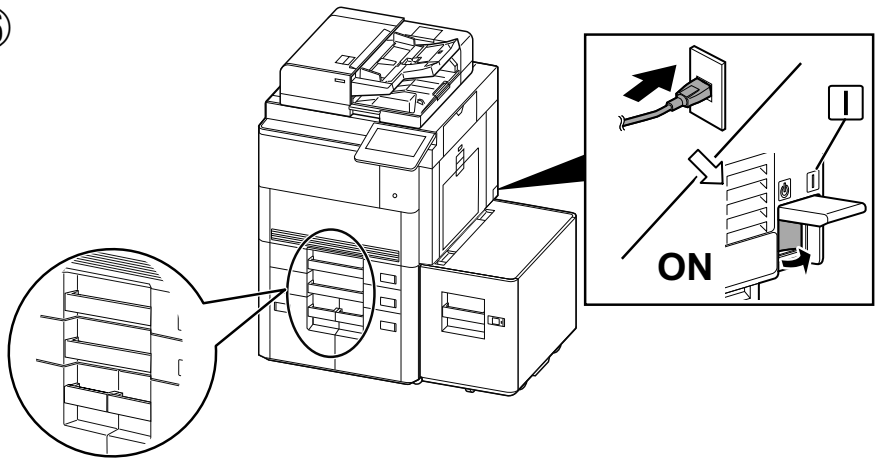

A

B

(EN) Changing paper size

(FR) Modification du format du papier

(ES) Cómo cambiar el tamaño de papel

(DE) Ändern des Papierformats

(IT) Cambio del formato della carta

(ZHCN) 纸张尺寸更改

(KO) 용지크기 변경

(JA) 用紙サイズ変更

A4 ➡ B5

①

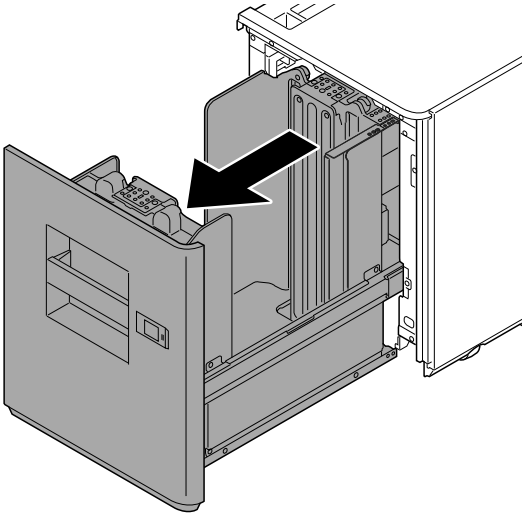

②

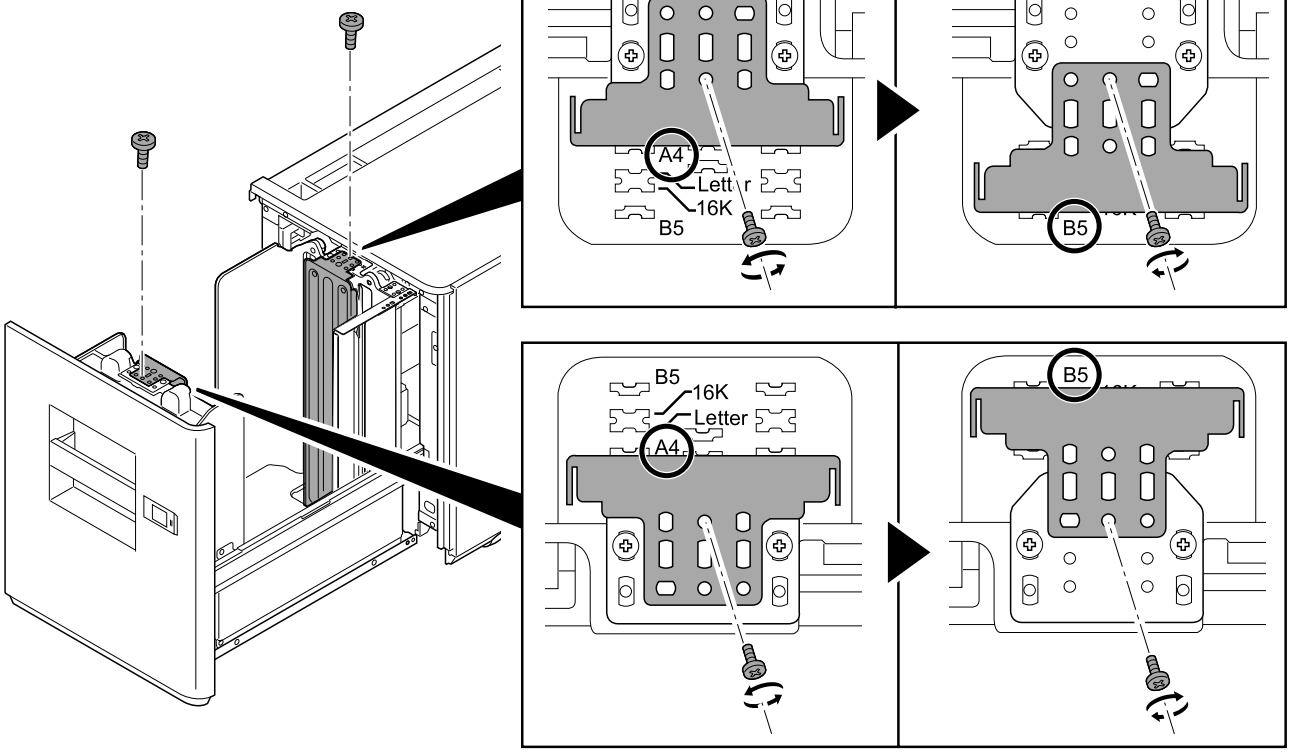

A

B

③

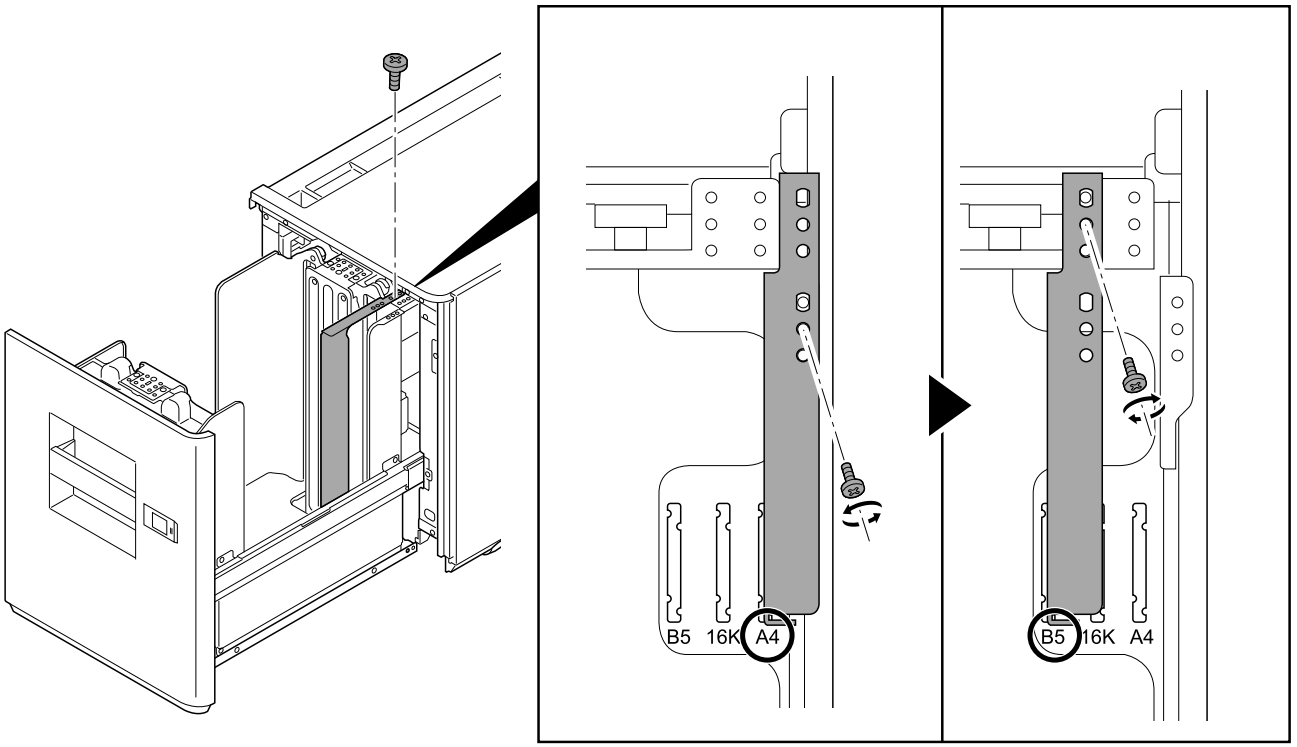

④

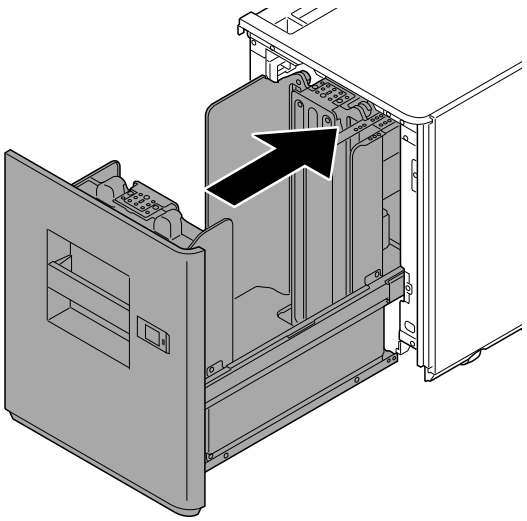

⑤

(EN) Run maintenance mode U208 and set the paper size.
*Proceed to step ⑥ on page 22.

(FR) Exécuter le mode maintenance U208 et définir le format du papier.
*Passer a l'etape ⑥ de la page 22.

(ES) Active el modo de mantenimiento U208 y ajuste el tamaño de papel.
*Vaya al paso ⑥ de la pagina 22.

(DE) Führen Sie den Wartungsmodus U208 aus und stellen Sie das Papierformat ein.
*Weitergehen zu Schritt ⑥ auf Seite 22.

(IT) Eseguire la modalita manutenzione U208 e impostare i formato carta.
*Procedere al passo ⑥ a pagina 22.

(ZHCN) 执行维修模式U208，进行纸张尺寸的设定。
※ 跳至P22 的步骤⑥。

(KO) 메인터넌스 모드 U208을 실행해 용지크기 설정을 합니다.
※ P22 의 순서 ⑥ 로 진행 .

(JA) メンテナンスモードU208を実行し、用紙サイズの設定をおこなう。
※P22 の手順 ⑥ へ進む。

A

B

(EN) Changing paper size

(FR) Modification du format du papier

(ES) Cómo cambiar el tamaño de papel

(DE) Ändern des Papierformats

(IT) Cambio del formato della carta

(ZHCN) 纸张尺寸更改

(KO) 용지크기 변경

(JA) 用紙サイズ変更

A4 ➡ Letter

①

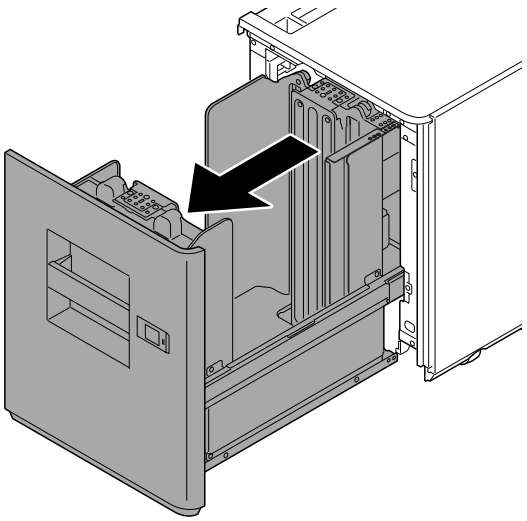

②

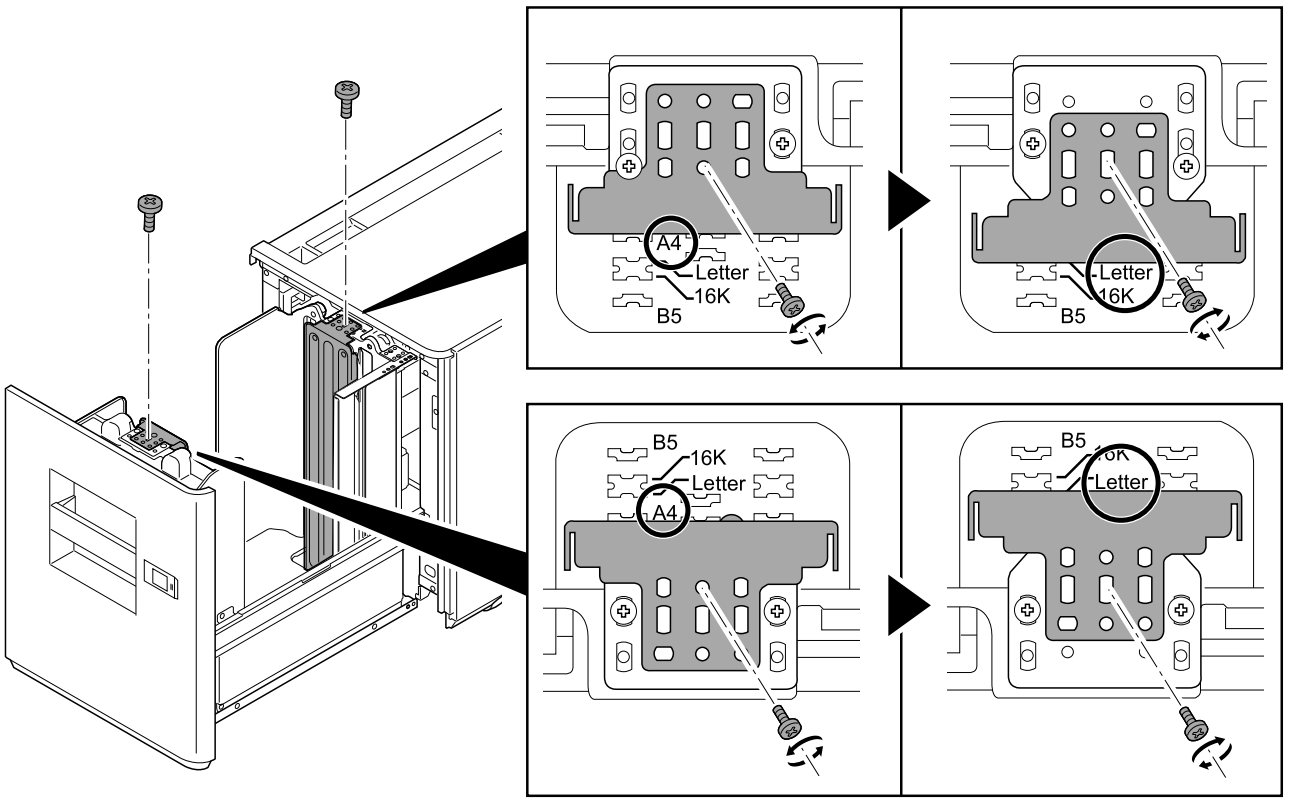

A

B

③

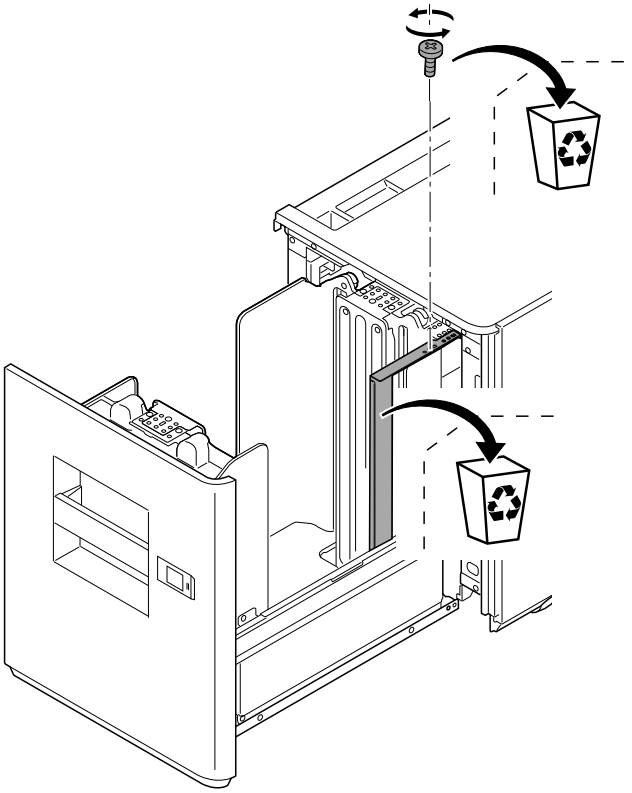

④

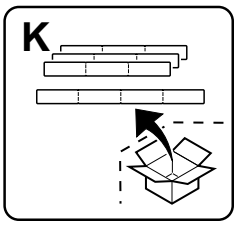

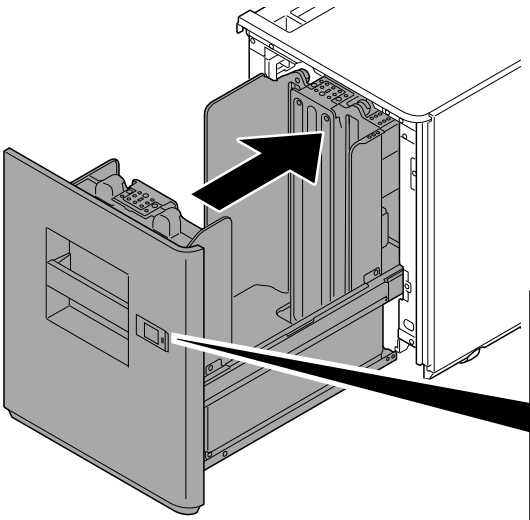

⑤

(EN) Run maintenance mode U208 and set the paper size.
*Proceed to step ⑥ on page 22.

(FR) Exécuter le mode maintenance U208 et définir le format du papier.
*Passer à l'étape ⑥ de la page 22.

(ES) Active el modo de mantenimiento U208 y ajuste el tamaño de papel.
*Vaya al paso ⑥ de la página 22.

(DE) Führen Sie den Wartungsmodus U208 aus und stellen Sie das Papierformat ein.
*Weitergehen zu Schritt ⑥ auf Seite 22.

(IT) Eseguire la modalita manutenzione U208 e impostare il formato carta.
*Procedere al passo ⑥ a pagina 22.

(ZHCN) 执行维修模式U208，进行纸张尺寸的设定。
※跳至P22 的步骤⑥。

(KO) 메인터넌스 모드 U208을 실행해 용지크기 설정을 합니다.
※P22 의 순서 ⑥ 로 진행 .

(JA) メンテナンスモードU208を実行し、用紙サイズの設定をおこなう。
※P22 の手順 ⑥ へ進む。

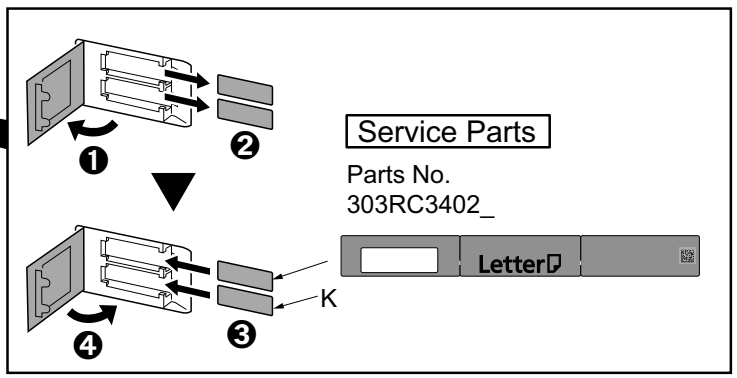

A

B

(EN) Changing paper size

(FR) Modification du format du papier

(ES) Cómo cambiar el tamaño de papel

(DE) Ändern des Papierformats

(IT) Cambio del formato della carta

(ZHCN) 纸张尺寸更改

(KO) 용지크기 변경

(JA) 用紙サイズ変更

Letter ➡ A4

①

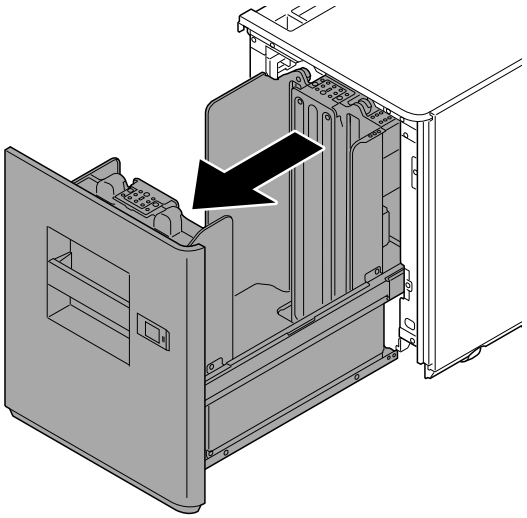

②

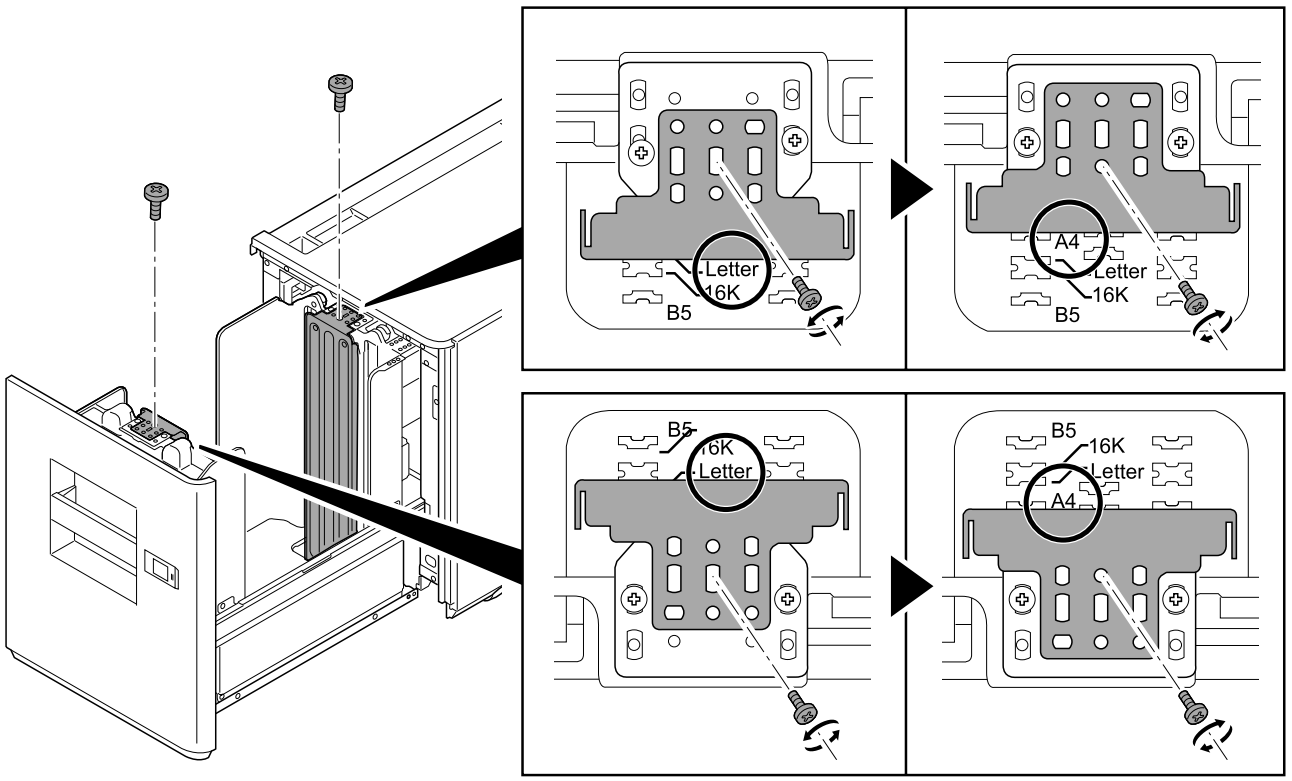

A

B

③

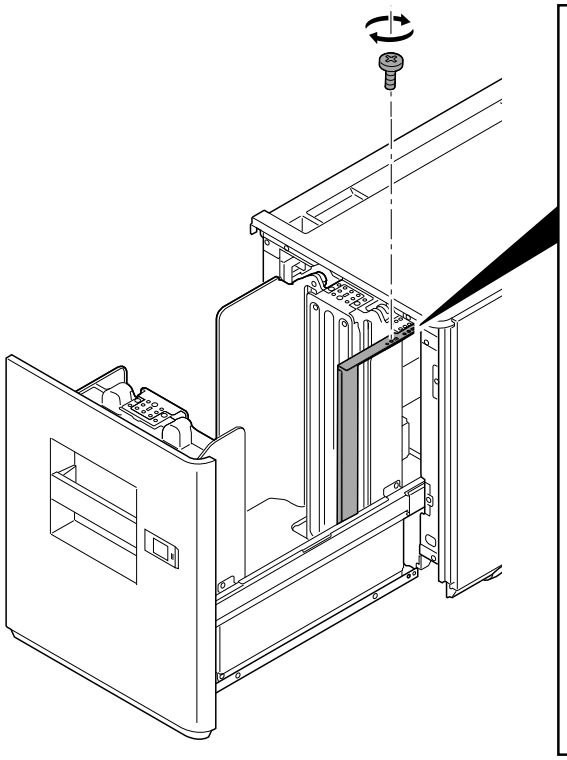

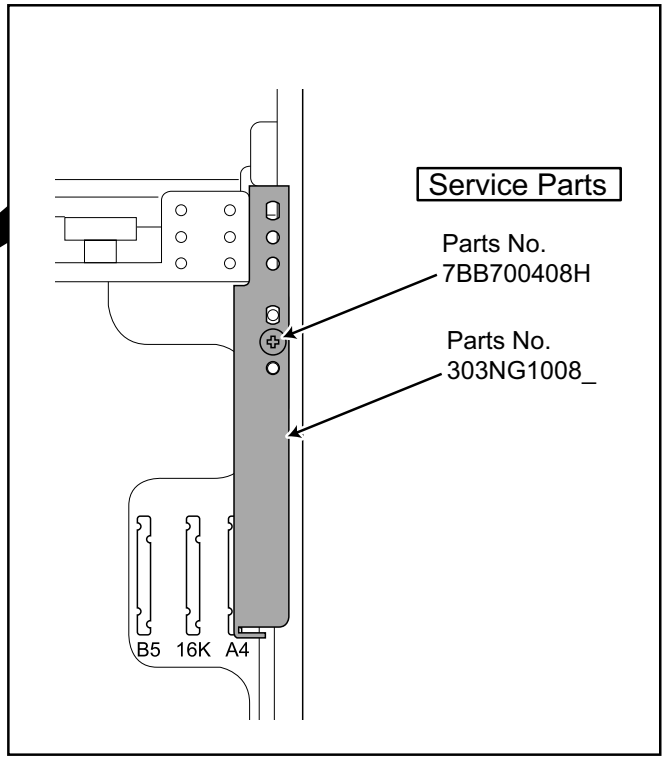

④

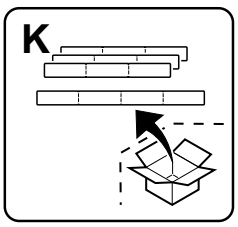

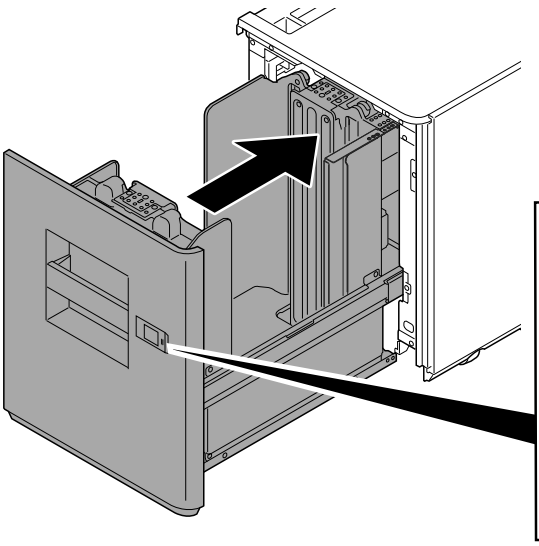

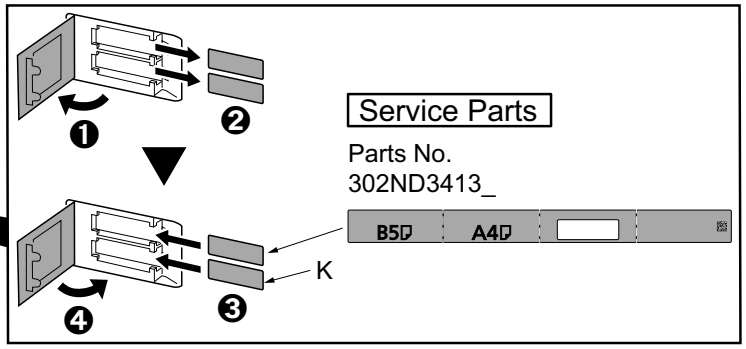

⑤

(EN) Run maintenance mode U208 and set the paper size.
*Proceed to step ⑥ on page 22.

(FR) Exécuter le mode maintenance U208 et définir le format du papier.
*Passer à l'étape ⑥ de la page 22.

(ES) Active el modo de mantenimiento U208 y ajuste el tamaño de papel.
*Vaya al paso ⑥ de la página 22.

(DE) Führen Sie den Wartungsmodus U208 aus und stellen Sie das Papierformat ein.
*Weitergehen zu Schritt ⑥ auf Seite 22.

(IT) Eseguire la modalita manutenzione U208 e impostare il formato carta.
*Procedere al passo ⑥ a pagina 22.

(ZHCN) 执行维修模式U208，进行纸张尺寸的设定。
※跳至P22 的步骤⑥。

(KO) 메인터넌스 모드 U208을 실행해 용지크기 설정을 합니다.
※P22 의 순서 ⑥ 로 진행 .

(JA) メンテナンスモードU208を実行し、
用紙サイズの設定をおこなう。
※P22 の手順 ⑥ へ進む。

A

B

⑥

(EN) Adjusting the cursor width

1. Load paper in the cassettes.
2. If the gap between the front deck cursor (3) and the paper (2) is outside the 0.5 to 1.0 mm range when the paper (2) is touching up against the rear deck cursor (1), perform the following adjustment.
   * A cursor width that is too small can hinder paper feeding, while a cursor width that is too large can lead to problems such as skewed paper feed.

(FR) Réglage de la largeur du curseur

1. Charger les tiroirs en papier.
2. Si l'écartement entre le curseur de platine avant (3) et le papier (2) est hors des limites de 0,5 à 1,0 mm quand le papier (2) touche le curseur de platine arrière (1), procéder au réglage suivant.
   * Une largeur trop faible du curseur risque d'empêcher l'entraînement du papier et une largeur trop grande risque d'entraîner des problèmes du type entraînement du papier de biais.

(ES) Cómo ajustar la anchura del cursor

1. Cargue papel en los cajones.
2. Si la separación entre el cursor frontal de la plataforma (3) y el papel (2) está fuera del rango de 0,5 a 1,0 mm cuando el papel (2) toca el cursor trasero de la plataforma (1), haga el siguiente ajuste.

* Una anchura del cursor demasiado pequeña puede impedir la alimentación de papel; una anchura del cursor demasiado grande puede provocar problemas con la alimentación torcida de papel.

(DE) Einstellen der Cursor-Breite

1. Papier in die Papierladen einlegen.
2. Falls der Abstand zwischen dem vorderen Konsole-Cursor (3) und dem Papier (2) außerhalb des Bereichs 0,5 bis 1,0 mm liegt, wenn das Papier (2) am hinteren Konsole-Cursor (1) anliegt, ist folgende Einstellung vorzunehmen.
   * Eine zu kleine Cursor-Breite kann den Papiereinzug behindern, wogegen eine zu große Cursor-Breite verkanteten Papiereinzug und ähnliche Probleme verursachen kann.

(IT) Regolazione della larghezza del cursore

1. Caricare carta nei cassetti.
2. Se lo spazio tra il cursore frontale del deck (3) e la carta (2) è fuori della gamma da 0,5 a 1,0 mm quando la carta (2) tocca il cursore postertiore del deck (1), eseguire la regolazione seguente.
   * Una larghezza dei cursori troppo piccola può ostacolare l'alimentazione della carta, mentre unalarghezza dei cursori troppo grande può essere causa di problemi, come ad esempio l'alimentazione obbliqua della carta.

(ZHCN) 游标宽度的调节

1. 在供纸盒中装入纸张。
2. 在堆纸板后部游标(1)与纸张(2)接触的状态下，如果堆纸板前部游标(3)与纸张(2)的间隙超出了0.5～1.0㎜的范围，须进行以下调节。
   ※如果游标宽度过小，可能造成不供纸，游标宽度过大，则可能发生歪斜进纸等情况。

(KO) 커서 폭 조정

1. 카세트에 용지를 장착합니다.
2. 데크커서 뒤(1)에 용지(2)가 접하고 있는 상태에서 데크커서 앞(3)과 용지(2)의 틈이 0.5 ~ 1.0mm의 범위외의 경우에는 이하의 조정을 합니다.
   ※커서 폭이 작으면 무급지, 커서 폭이 크면 경사급지 등이 발생할 가능성이 있습니다.

(JA) カーソル幅の調整

1. カセットに用紙をセットする。
2. デッキカーソル後(1)に用紙(2)が接している状態で、デッキカーソル前(3)と用紙(2)の隙間が0.5～1.0㎜の範囲外の場合は、以下の調整をおこなう。
   ※カーソル幅が小さいと無給紙、カーソル幅が大きいと斜め給紙などが発生する可能性がある。

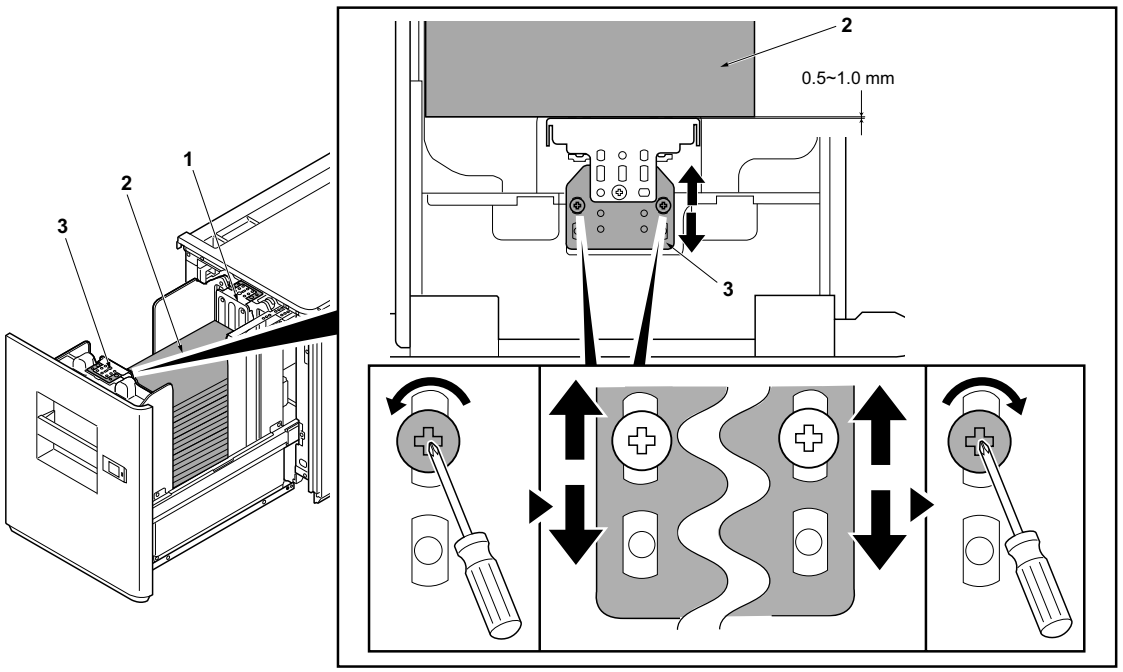

A

B

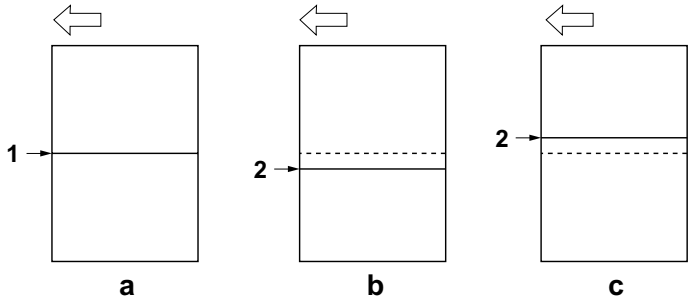

(EN) **Adjusting the center line**

1. Check the deviation between the center (1) of a correct image (a) and the center (2) of a test pattern. If the gap exceeds the reference value, adjust the gap according to the following procedure.
<Reference value> Wthin ± 2.0 mm
2. Set the maintenance mode U034 and select [LSU Out Left] / [Center Line] > [Cassette5].
3. Adjust the values.
Test pattern (b) : Increase the setting value.

(FR) **Réglage de l'axe**

1. Vérifier la déviation entre l'axe (1) d'une image correcte (a) et l'axe (2) d'une forme d'essai. Si l'écart excède la valeur de référence, le régler selon la procédure suivante.
<Valeur de référence> ±2,0 mm max
2. Passez en mode maintenance U034 et sélectionnez [LSU Out Left] / [Center Line] > [Cassette5].

(ES) **Ajuste de la línea central**

1. Compruebe la desviación entre el centro (1) de una imagen correcta (a) y el centro (2) de un patrón de prueba. Si la separación supera el valor de referencia, ajústela siguiendo este procedimiento.
<Valor de referencia> Dentro de ± 2,0 mm
2. Configure el modo de mantenimiento U034 y seleccione [LSU Out Left] / [Center Line] > [Cassette5].

(DE) **Einstellen der Mittenlinie**

1. Überprüfen Sie die Abweichung zwischen der Mitte (1) eines korrekten Bilds (a) und der Mitte (2) eines Prüfmusters. Wenn der Abstand größer als der Bezugswert ist, den Abstand mit dem folgenden Verfahren einstellen.
<Bezugswert> Innerhalb ± 2,0 mm
2. Aktivieren Sie den Wartungsmodus U034 und wählen Sie [LSU Out Left] / [Center Line] > [Cassette5].

(IT) **Regolazione della linea centrale**

1. Controllare la deviazione tra il centro (1) di un'immagine corretta (a) e il centro (2) di un modello di prova. Se lo scostamento supera il valore di riferimento, regolare lo scostamento stesso seguendo questa procedura.
<Valore di riferimento> Entro ± 2,0 mm
2. Impostare la modalità manutenzione U034 e selezionare [LSU Out Left] / [Center Line] > [Cassette5].

(ZHCN) 中心线调节

1. 确认标准图像 (a) 的中心位置 (1) 与测试图案的中心位置 (2) 的偏移。如果偏移值超过标准值，则按照下列步骤进行调整。
〈标准值〉 ±2.0mm 以内
2. 进入维修保养模式 U034，把 [LSU Out Left] / [Center Line] > [Cassette5]。

(KO) 센터라인 조정

1. 적정화상 (a) 의 센터 (1) 와 테스트패턴의 센터 (2) 의 차이를 확인합니다 . 차이가 기준치 외의 경우 다음의 순서대로 조정을 합니다 .
<기준치> ±2.0mm 이내
2. 메인터넌스 모드 U034 를 설정하고 [LSU Out Left] / [Center Line] > [Cassette5] 를 선택합니다 .

(JA) センターライン調整

1. 適正画像 (a) のセンター(1) とテストパターンのセンター(2) のずれを確認する。ずれが基準値外の場合、次の手順で調整をおこなう。
＜基準値＞ ±2.0mm 以内。
2. メンテナンスモード U034 をセットし、[LSU Out Left] / [Center Line] > [Cassette5] を選択する。

A

B

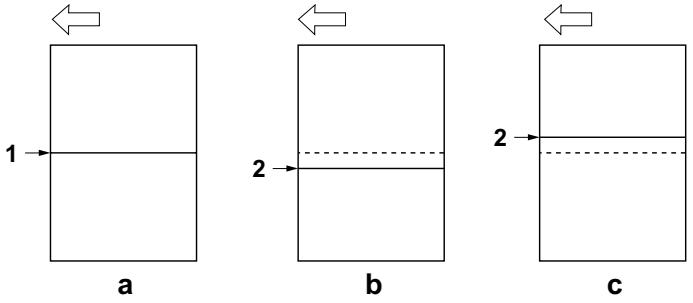

Test pattern (c) : Decrease the setting value.
Amount of change per step: 0.1mm
4. Press the [Start] key to confirm the setting value.
5. Print the test pattern.

6. Repeat the steps 2 to 5 above until the gap of line (2) in test pattern is within the reference.
<Reference value> Wthin ± 2.0 mm

---

3. Régler les valeurs.
Mire d' essai (b) : Augmentez la valeur de réglage.
Mire d' essai (c) : Diminuez la valeur de réglage.
Changement par graduation d'échelle: 0,1mm
4. Appuyer sur la touche de [Départ] pour confirmer la valeur de réglage.
5. Imprimez le motif de test.

6. Répéter les étapes 2 à 5 ci-dessus jusqu'à ce que l'espace de la ligne (2) dans le motif de test soit dans la référence.
<Valeur de référence> ±2,0 mm max.

---

3. Ajuste los valores.
Patrón de prueba (b) : Aumente el valor de configuración.
Patrón de prueba (c) : Reduzca el valor de configuración.
Magnitud del cambio por incremento: 0,1mm
4. Pulse la tecla de [Inicio] para confirmar el valor de configuración.
5. Imprima el patrón de prueba.

6. Repita los pasos del 2 al 5 anteriores hasta que el espacio de línea (2) del patrón de prueba esté dentro de los valores de referencia.
<Valor de referencia> Dentro de ± 2,0 mm

---

3. Die Werte einstellen.
Testmuster (b) : Den Einstellwert erhöhen.
Testmuster (c) : Den Einstellwert verringern.
Änderung pro Schritt: 0,1mm
4. Den Einstellwert durch Drücken der [Start]-Taste bestätigen.
5. Drucken Sie die Testseite aus.

6. Wiederholen Sie die Schritte 2 bis 5 solange, bis der Abstand der Linie (2) auf der Testseite sich innerhalb der Referenz befindet.
<Bezugswert> Innerhalb ± 2,0 mm

---

3. Regolare i valori.
Modello di prova (b) : Aumentare il valore dell'impostazione.
Modello di prova (c) : Diminuire il valore dell'impostazione.
Entità modifica per passo: 0,1mm
4. Premere il tasto di [Avvio] per confermare il valore dell'impostazione.
5. Stampare lo schema di prova.

6. Ripetere i punti da 2 a 5 sopra indicati fino a portare lo spazio della linea (2) nello schema di prova all'interno del riferimento.
<Valore di riferimento> Entro ± 2,0 mm

---

3. 调整设定值。
测试图案 (b) ：调高设定值。
测试图案 (c) ：调低设定值。
设定值的一个调整单位变化量：0.1mm
4. 按 [开始] 键，以确定设定值。
5. 打印测试图案。

6. 重复步骤 2 ～ 5，直至测试样张的线 (2) 的偏移值达到标准值以内。
〈标准值〉 ±2.0mm 以内

---

3. 설정치를 조정합니다 .
테트스 패턴 (b) :설정치를 높입니다 .
테트스 패턴 (c) :설정치를 내립니다 .
1 스텝당 변화량:0.1mm
4. [복사 / 시작] 키를 누르고 설정치를 확인합니다 .
5. 시험 패턴을 인쇄합니다 .

6. 테스트 패턴에서 라인 (2) 의 격차가 기준 이내가 될 때까지 2 단계 ～ 5 단계를 반복 수행합니다 .
＜기준치＞ ±2.0mm 이내

---

3. 設定値を調整する。
テストパターン (b) ：設定値を上げる。
テストパターン (c) ：設定値を下げる。
1 ステップ当たりの変化量:0.1mm
4. [スタート] キーを押し、設定値を確定する。
5. テストパターンを出力する。

6. テストパターンの線 (2) のずれが基準値内になるまで手順 2 ～ 5 を繰り返す。
〈基準値〉 ±2.0mm 以内。



2020. 9
303RL5671202

PF-7140

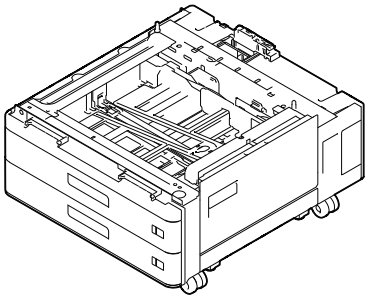

INSTALLATION GUIDE

GUIDE D'INSTALLATION

GUÍA DE INSTALACION

INSTALLATIONSANLEITUNG

GUIDA ALL'INSTALLAZIONE

安装手册

설치안내서

設置手順書

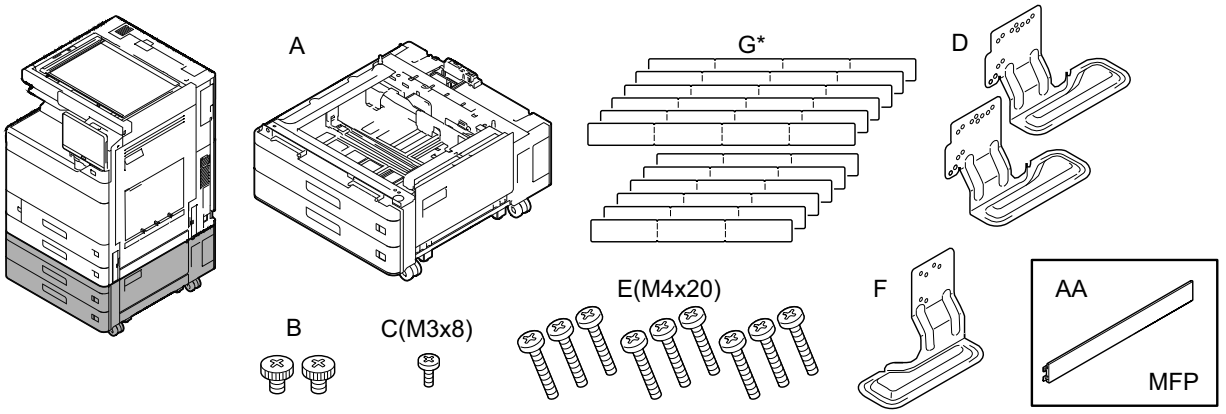

(EN) G*; Number and type of the parts supplied vary by destination.
(FR) G*; Le nombre et le type des pièces fournies varient selon la destination.
(ES) G*; El número y el tipo de piezas proporcionadas varían según el destino.
(DE) G*; Die Anzahl und Ausführung der enthaltenen Teile variiert je nach Auslieferungsort.
(IT) G*; Il numero e il tipo di parti fornite variano in base alla destinazione.
(ZHCN) G*; 根据地区，附带零件的种类和数量会有不同。
(KO) G*; 국가에 따라 동봉 수량과 종류가 다릅니다.
(JA) G*; 仕向地によって、同梱物の種類および数量が異なります。

(EN) Be sure to remove any tape and/or cushioning materials from the parts supplied.
(FR) Veillez à retirer les morceaux de bande adhésive et/ou les matériaux de rembourrage des pièces fournies.
(ES) Asegúrese de quitar todas las cintas y/o material amortiguador de las partes suministradas.
(DE) Stellen Sie sicher, dass sämtliche Klebebänder und/oder Polstermaterial von den gelieferten Teilen entfernt wurden.
(IT) Rimuovere tutti i nastri adesivi e/o i materiali di protezione dalle parti fornite.
(ZHCN) 如果附属品上带有固定胶带、缓冲材料时，请务必揭下。
(KO) 동봉품에 고정 테이프 , 완충재가 붙어 있는 경우에는 반드시 제거하십시오.
(JA) 同梱品に固定テープ、緩衝材がついている場合は、必ず取り外すこと。

---

①

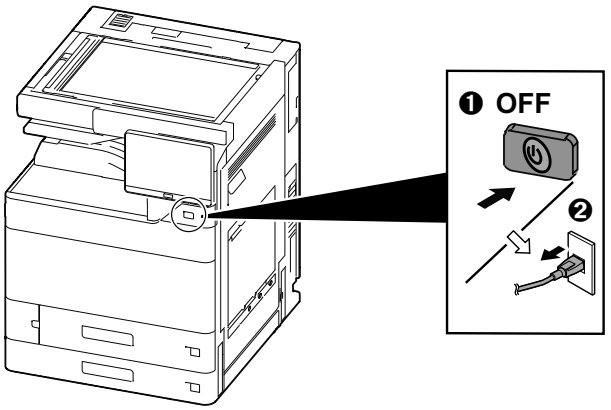

②

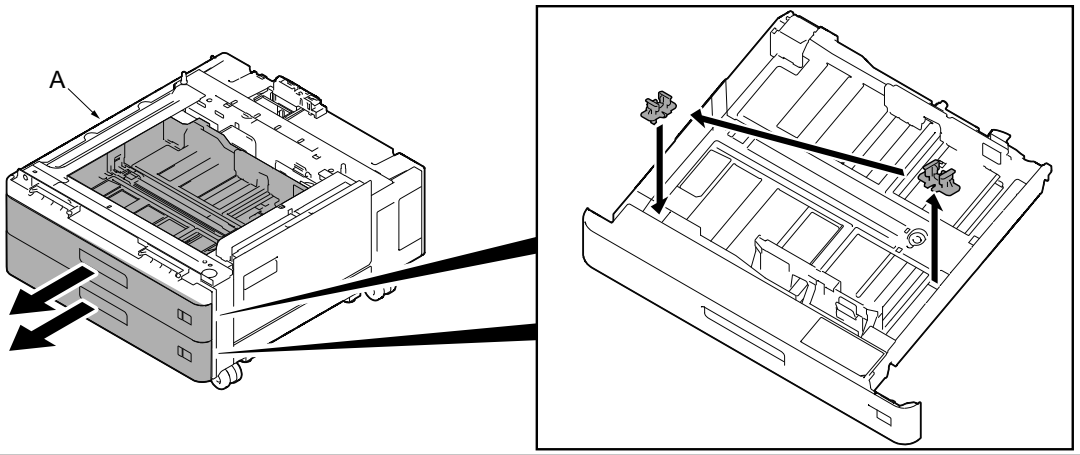

③

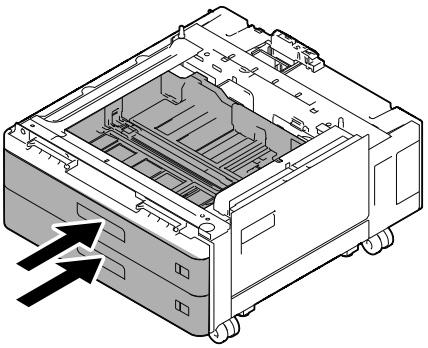

④

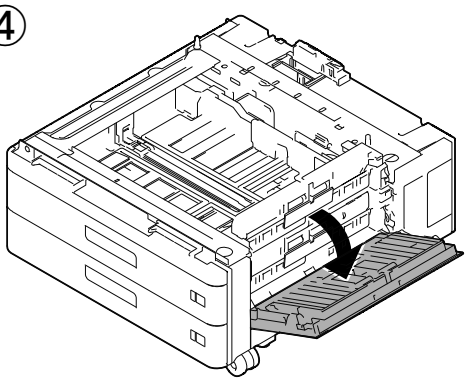

⑤

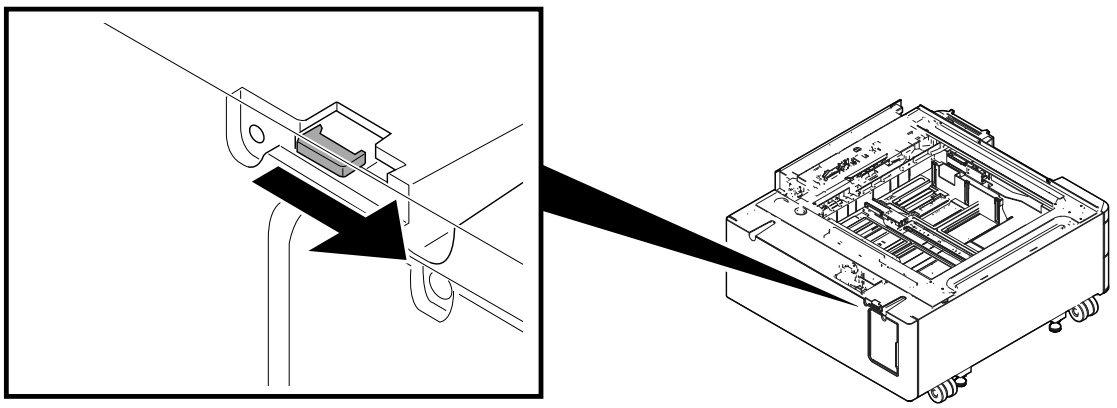

⑥

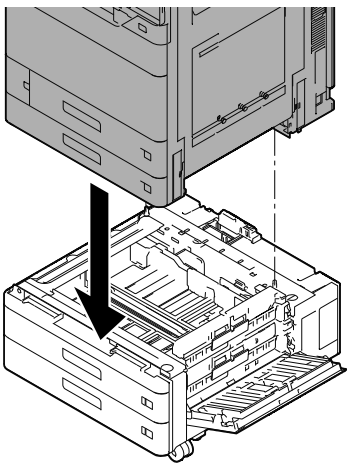

⑦

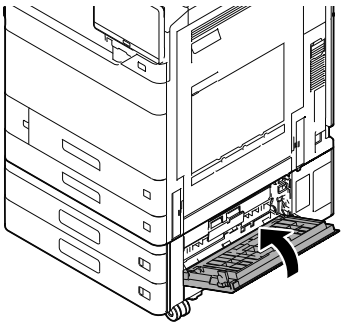

⑧

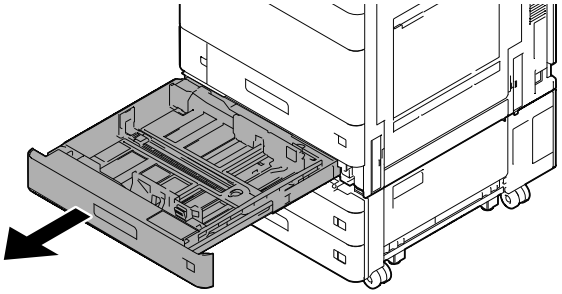

⑨

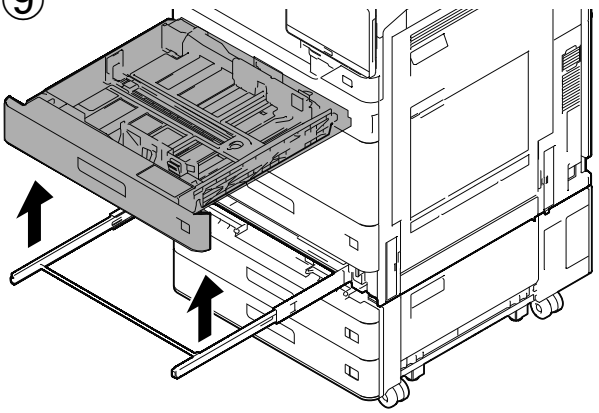

⑩

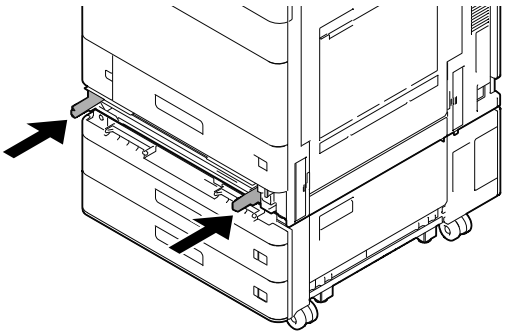

⑪

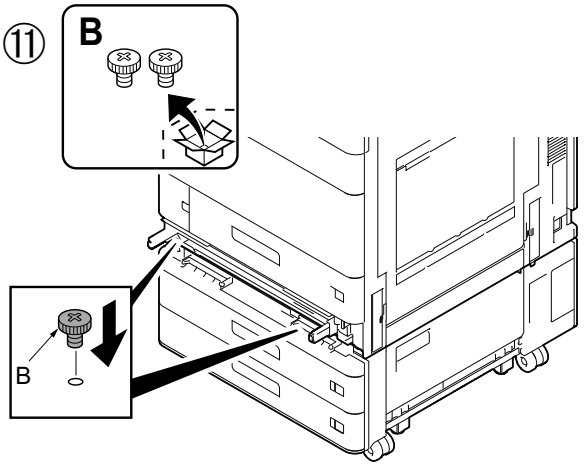

⑫

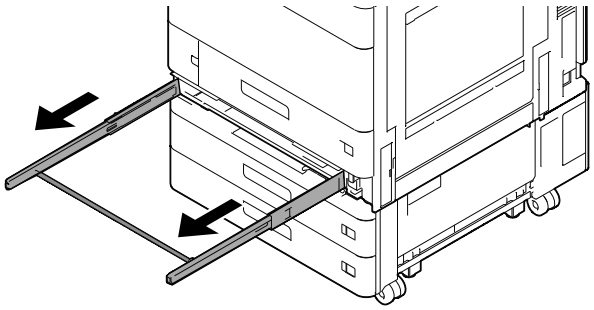

⑬

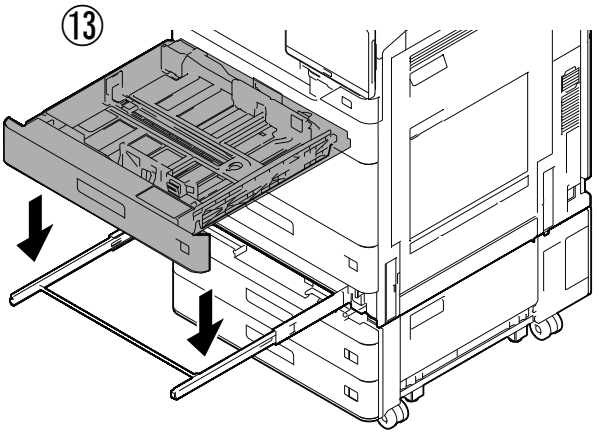

⑭

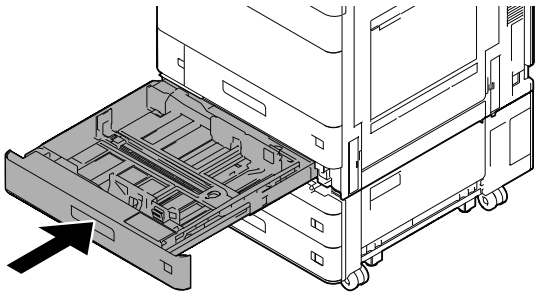

⑮

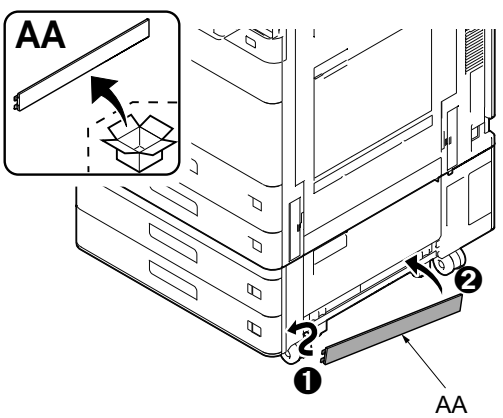

⑯

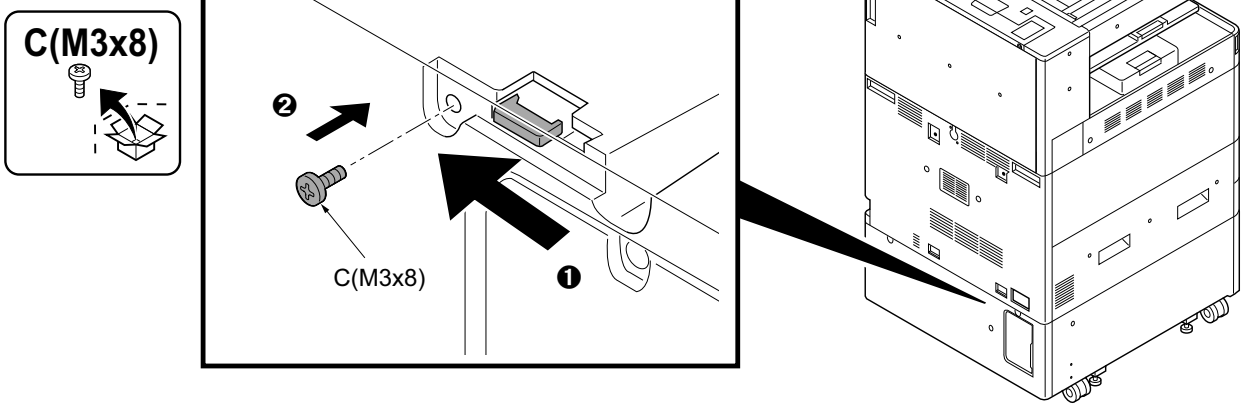

⑰

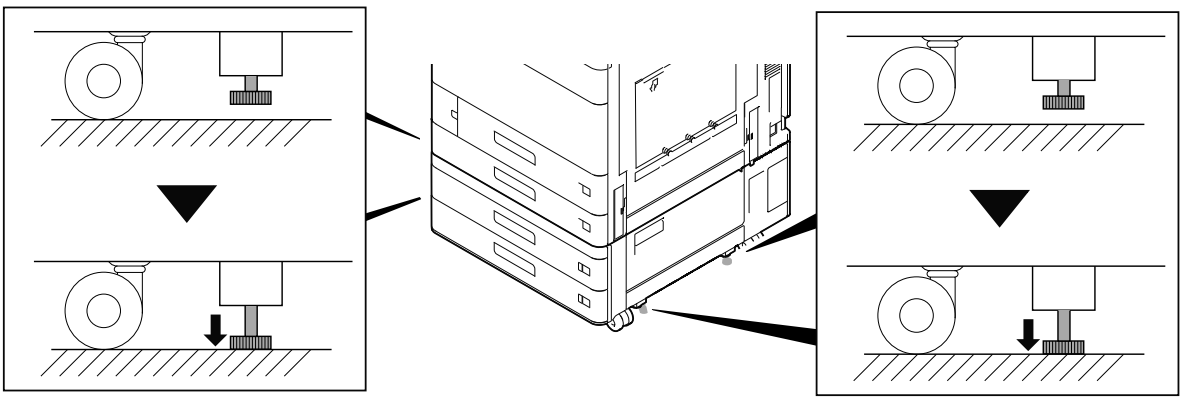

⑱

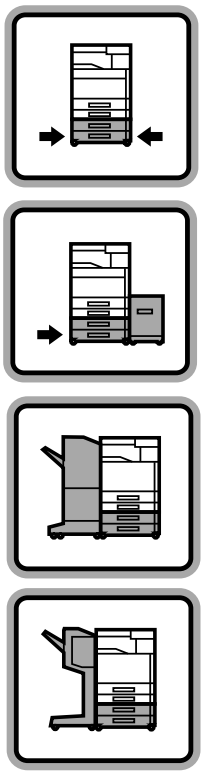

⑱-1

⑱-2

⑱-3

⑱-3

⑱-1

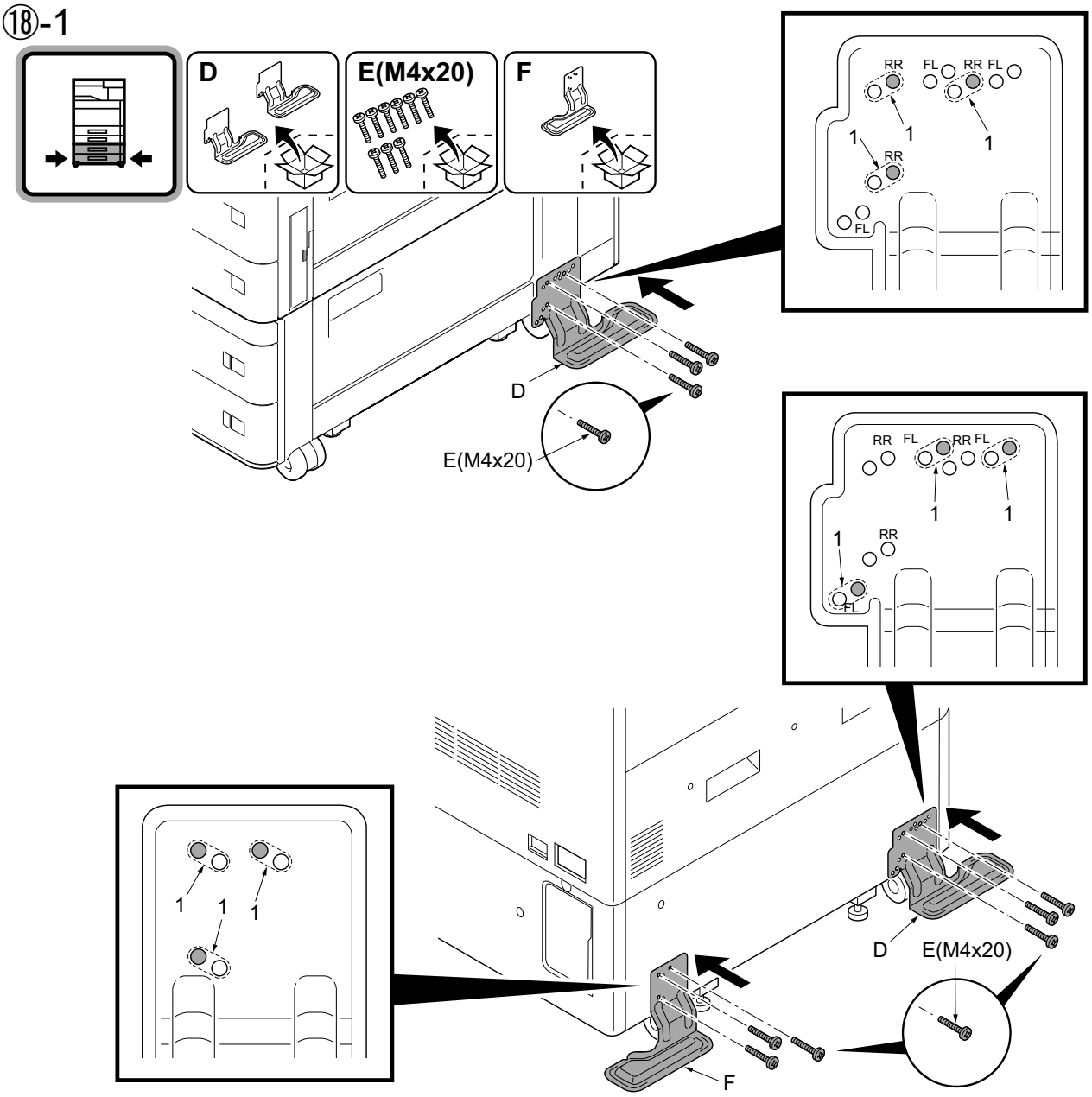

(EN) Select holes (1) and install each stopper (D,F) with 3 S Tite screws M4 × 20 (E) so that the stoppers will be grounded on the floor.

(FR) Sélectionner les trous (1) et installer chaque butée (D,F) avec 3 vis S Tite M4 × 20 (E) de sorte que les butées reposent sur le sol.

(ES) Seleccione los orificios (1) e instale cada tope (D,F) con los 3 tornillos S Tite M4 × 20 (E) de manera que los topes se conecten a tierra en el suelo.

(DE) Wählen Sie die Öffnungen (1) und befestigen Sie jeden Anschlag (D,F) mit den 3 S-Tite-Schrauben M4 × 20 (E) so an, dass die Anschläge am Boden aufsitzen.

(IT) Selezionare i fori (1) ed installare ogni fermo (D,F) con le 3 viti S Tite M4 × 20 (E) in modo che i fermi siano posti a terra sul pavimento.

(ZHCN) 在孔（1）处各用 3 颗 M4×20 紧固型 S 螺丝（E）安装限位器（D,F），使之和地板接触。

(KO) 전도방지쇠 (D,F) 가 바닥면에 접지될 수 있도록 구멍 (1) 을 선택해 나사 M4×20 S 타이트 (E) 각 3 개로 설치합니다 .

(JA) 転倒防止金具(D,F)が床面に接地するように、穴(1)を選択してビスM4×20 Sタイト(E)各3本で取り付ける。

⑲

⑱-2

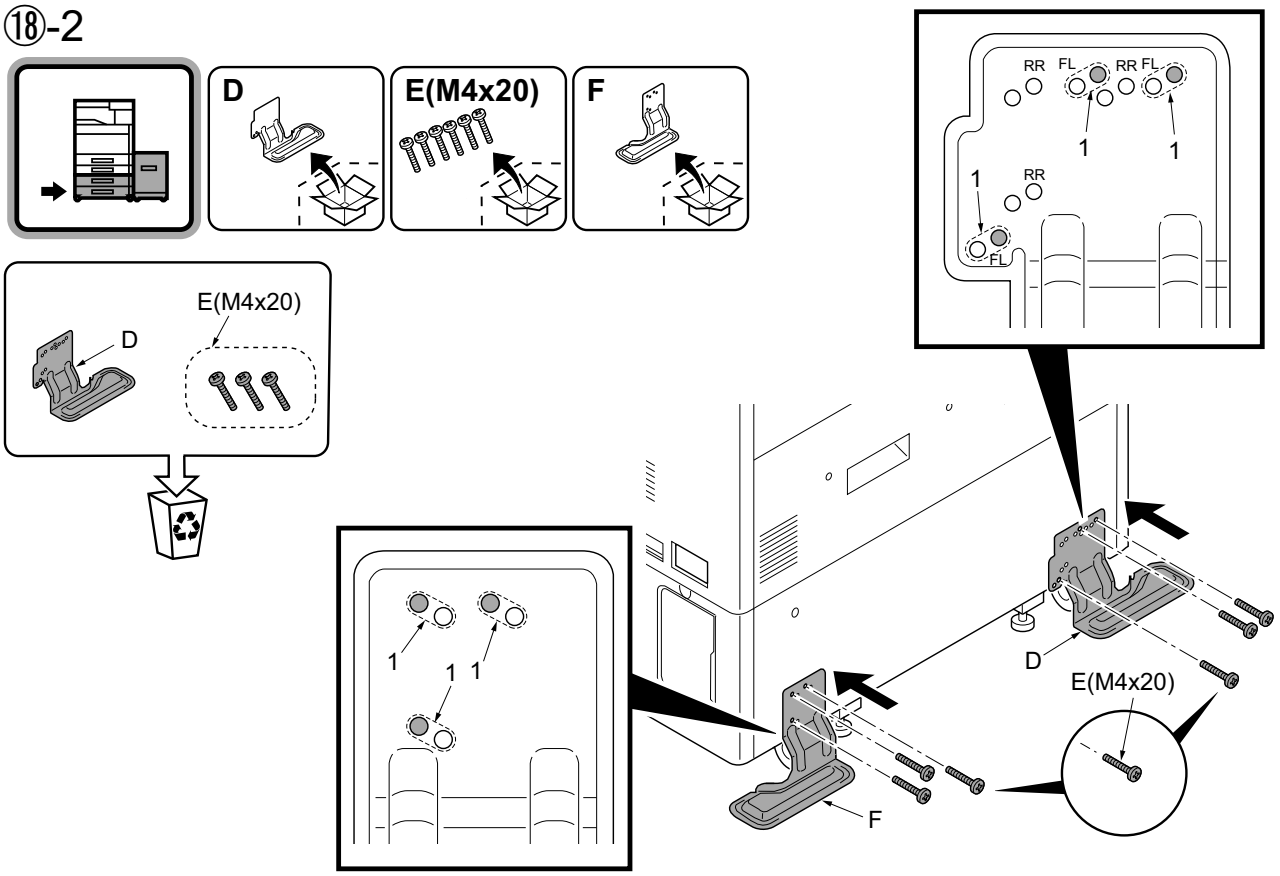

(EN) Select holes (1) and install each stopper (D,F) with 3 S Tite screws M4 × 20 (E) so that the stoppers will be grounded on the floor.

(FR) Sélectionner les trous (1) et installer chaque butée (D,F) avec 3 vis S Tite M4 × 20 (E) de sorte que les butées reposent sur le sol.

(ES) Seleccione los orificios (1) e instale cada tope (D,F) con los 3 tornillos S Tite M4 × 20 (E) de manera que los topes se conecten a tierra en el suelo.

(DE) Wählen Sie die Öffnungen (1) und befestigen Sie jeden Anschlag (D,F) mit den 3 S-Tite-Schrauben M4 × 20 (E) so an, dass die Anschläge am Boden aufsitzen.

(IT) Selezionare i fori (1) ed installare ogni fermo (D,F) con le 3 viti S Tite M4 × 20 (E) in modo che i fermi siano posti a terra sul pavimento.

(ZHCN) 在孔（1）处各用 3 颗 M4×20 紧固型 S 螺丝（E）安装限位器（D,F），使之和地板接触。

(KO) 전도방지쇠 (D,F) 가 바닥면에 접지될 수 있도록 구멍 (1) 을 선택해 나사 M4×20 S 타이트 (E) 각 3 개로 설치합니다 .

(JA) 転倒防止金具(D,F)が床面に接地するように、穴(1)を選択してビスM4×20 Sタイト(E)各3本で取り付ける。

⑲

⑱-3

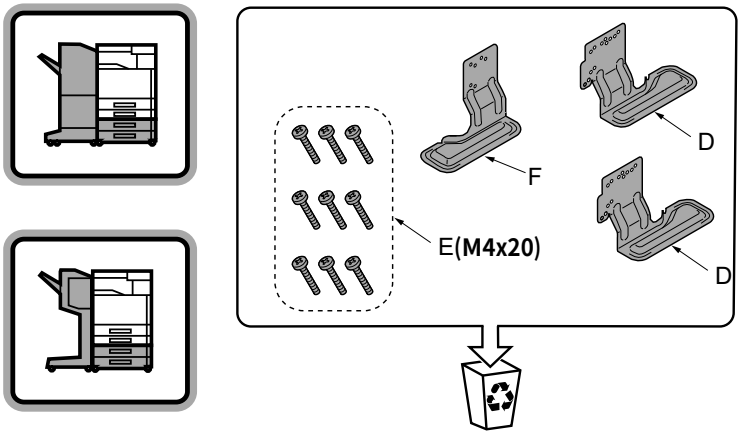

⑲

⑲

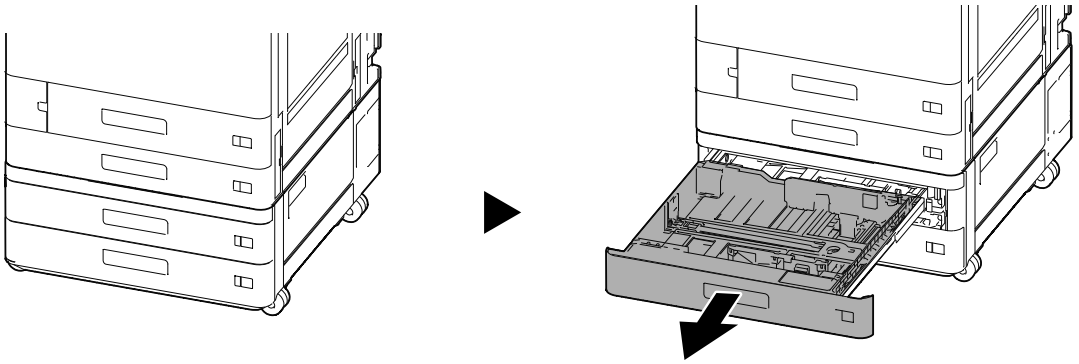

⑳

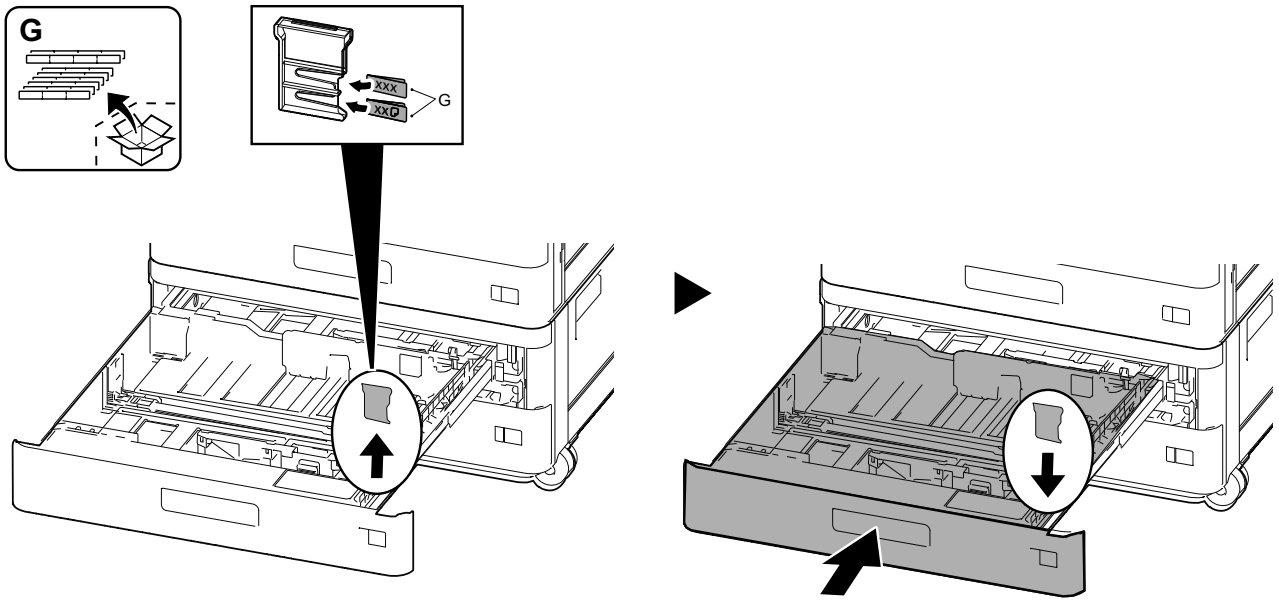

㉑

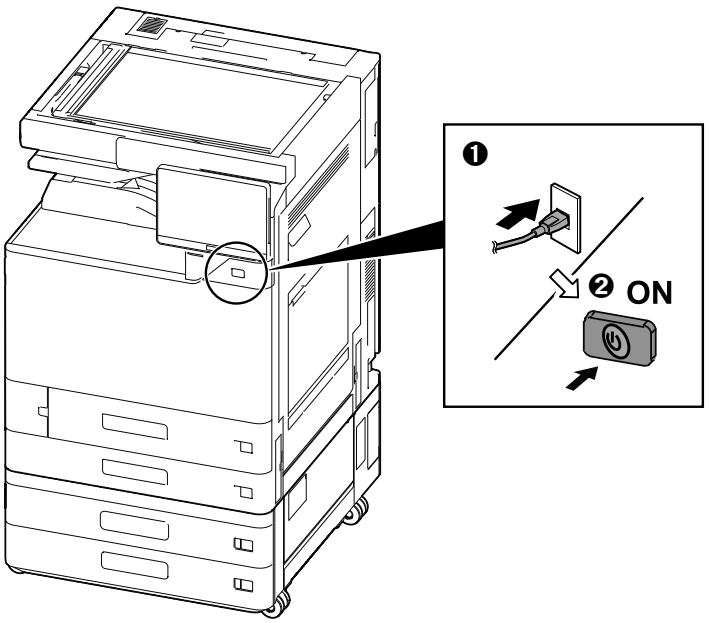

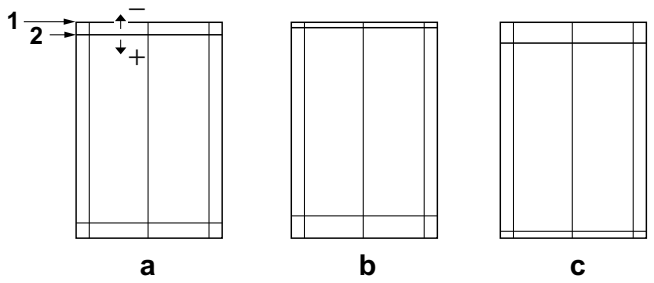

(EN)

Adjusting the leading edge timing

1. Check the gap between the paper leading edge (1) and the line (2) of test pattern (a). If the gap exceeds the reference value, adjust the gap according to the following procedure.
   <Reference value> 20mm±1.5mm
2. Set the maintenance mode U034 and select [Start Position] > [Cass(L)].

(FR)

Réglage de la synchronisation du bord de tête

1. Vérifier l'espace entre le bord de tête du papier (1) et la ligne (2) du motif de (a). Si l'écart excède la valeur de référence, le régler selon la procédure suivante.
   <Valeur de référence> 20mm±1.5mm
2. Passez en mode maintenance U034 et sélectionnez [Start Position] > [Cass(L)].

(ES)

Ajuste de la sincronización del borde superior

1. Compruebe el espacio entre el borde superior del papel (1) y la línea (2) del patrón de prueba (a). Si la separación supera el valor de referencia, ajústela siguiendo este procedimiento.
   <Valor de referencia> 20mm±1.5mm
2. Configure el modo de mantenimiento U034 y seleccione [Start Position] > [Cass(L)].

(DE)

Einstellen des Vorderkanten-Timing

1. Überprüfen Sie den Abstand zwischen der Papier-Vorderkante (1) und der Linie (2) auf der Testseite (a). Wenn der Abstand größer als der Bezugswert ist, den Abstand mit dem folgenden Verfahren einstellen.
   <Bezugswert>20mm±1.5mm
2. Aktivieren Sie den Wartungsmodus U034 und wählen Sie [Start Position] > [Cass(L)].

(IT)

Regolazione della sincronizzazione del bordo superiore

1. Controllare lo spazio tra il bordo superiore del foglio (1) e la linea (2) dello schema di prova (a). Se lo scostamento supera il valore di riferimento, regolare lo scostamento stesso seguendo questa procedura.
   <Valore di riferimento> 20mm±1.5mm
2. Impostare la modalità manutenzione U034 e selezionare [Start Position] > [Cass(L)].

(ZHCN)

前端对位调节

1. 确认纸张的前端（1）和测试样张（a）的线（2）之间的偏移值。如果偏移值超过标准值，则按照下列步骤进行调整。
   〈标准值〉20㎜±1.5㎜
2. 进入维修保养模式 U034，把[Start Position] > [Cass(L)] 。

(KO)

선단 타이밍 조정

1. 용지 선단 (1) 과 테스트 패턴 (a) 의 라인 (2) 사이의 격차를 확인하십시오 . 차이가 기준치 외의 경우 다음의 순서대로 조정을 합니다 .
   <기준치> 20mm±1.5mm
2. 메인터넌스 모드 U034 를 설정하고 [Start Position] > [Cass(L)] 을 선택합니다 .

(JA)

先端タイミング調整

1. 紙の先端 (1) とテストパターン (a) の線 (2) のずれを確認する。ずれが基準値外の場合、次の手順で調整をおこなう。
＜基準値＞ 20㎜±1.5㎜
2. メンテナンスモード U034 をセットし、[Start Position] > [Cass(L)] を選択する。

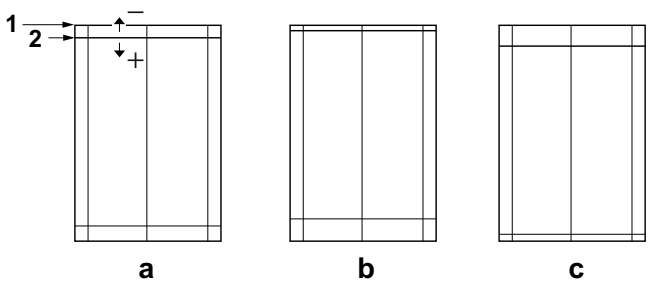

3. Adjust the values.
Test pattern (b) : Increase the setting value.
Test pattern (c) : Decrease the setting value.
Amount of change per step: 0.1mm
4. Press the [Start] key to confirm the setting value.
5. Print the test pattern.
6. Repeat the steps 2 to 5 above until the gap of line (2) in test pattern (a) is within the reference.
<Reference value> 20mm±1.5mm

---

3. Régler les valeurs.
Mire d' essai (b) : Augmentez la valeur de réglage.
Mire d' essai (c) : Diminuez la valeur de réglage.
Changement par graduation d'échelle: 0,1mm
4. Appuyer sur la touche de [Départ] pour confirmer la valeur de réglage.
5. Imprimez le motif de test.
6. Répéter les étapes 2 à 5 ci-dessus jusqu'à ce que l'espace de la ligne (2) dans le motif de test (a) soit dans la référence.
<Valeur de référence> 20mm±1.5mm

---

3. Ajuste los valores.
Patrón de prueba (b) : Aumente el valor de configuración.
Patrón de prueba (c) : Reduzca el valor de configuración.
Magnitud del cambio por incremento: 0,1mm
4. Pulse la tecla de [Inicio] para confirmar el valor de configuración.
5. Imprima el patrón de prueba.
6. Repita los pasos del 2 al 5 anteriores hasta que el espacio de línea (2) del patrón de prueba (a) esté dentro de los valores de referencia.
<Valor de referencia> De 20mm±1.5mm

---

3. Die Werte einstellen.
Testmuster (b) : Den Einstellwert erhöhen.
Testmuster (c) : Den Einstellwert verringern.
Änderung pro Schritt: 0,1mm
4. Den Einstellwert durch Drücken der [Start]-Taste bestätigen.
5. Drucken Sie die Testseite aus.
6. Wiederholen Sie die Schritte 2 bis 5 solange, bis der Abstand der Linie (2) auf der Testseite (a) sich innerhalb der Referenz befindet.
<Bezugswert> 20mm±1.5mm

---

3. Regolare i valori.
Modello di prova (b) : Aumentare il valore dell'impostazione.
Modello di prova (c) : Diminuire il valore dell'impostazione.
Entità modifica per passo: 0,1mm
4. Premere il tasto di [Avvio] per confermare il valore dell'impostazione.
5. Stampare lo schema di prova.
6. Ripetere i punti da 2 a 5 sopra indicati fino a portare lo spazio della linea (2) nello schema di prova (a) all'interno del riferimento.
<Valore di riferimento> 20mm±1.5mm

---

3. 调整设定值。
测试图案 (b) ：调高设定值。
测试图案 (c) ：调低设定值。
设定值的一个调整单位变化量：0.1㎜
4. 按 [开始] 键，以确定设定值。
5. 打印测试图案。
6. 重复步骤 2 ～ 5，直至测试样张 (a) 的线 (2) 的偏移值达到标准值以内。
〈标准值〉 20㎜±1.5㎜

---

3. 설정치를 조정합니다 .
테트스 패턴 (b) :설정치를 높입니다 .
테트스 패턴 (c) :설정치를 내립니다 .
1 스텝당 변화량:0.1mm
4. [복사 / 시작] 키를 누르고 설정치를 확인합니다 .
5. 시험 패턴을 인쇄합니다 .
6. 테스트 패턴 (a) 에서 라인 (2) 의 격차가 기준 이내가 될 때까지 2 단계 ～ 5 단계를 반복 수행합니다 .
＜기준치＞ 20mm±1.5mm

---

3. 設定値を調整する。
テストパターン (b) ：設定値を上げる。
テストパターン (c) ：設定値を下げる。
1 ステップ当たりの変化量:0.1㎜
4. [スタート] キーを押し、設定値を確定する。
5. テストパターンを出力する。
6. テストパターン (a) の線 (2) のずれが基準値内になるまで手順 2 ～ 5 を繰り返す。
〈基準値〉20㎜±1.5㎜

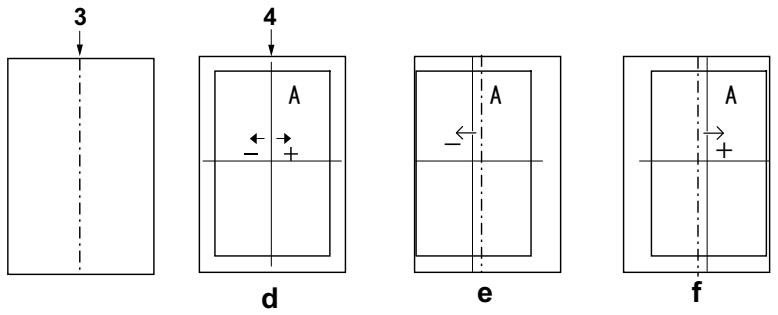

Adjusting the center line

1. Check the gap between the paper center (3) and the line (4) of test pattern (d). If the gap exceeds the reference value, adjust the gap according to the following procedure.
<Reference value> within ±0.5mm.

2. Set the maintenance mode U034 and select [Center Line] > [Cass3] or [Cass4].

Réglage de l'axe

1. Vérifier l'espace entre le centre du papier (3) et la ligne (4) du motif de (d). Si l'écart excède la valeur de référence, le régler selon la procédure suivante.
<Valeur de référence> ±0,5mm max.

2. Passez en mode maintenance U034 et sélectionnez [Center Line] > [Cass3] ou [Cass4].

Ajuste de la línea central

1. Compruebe el espacio entre el centro del papel (3) y la línea (4) del patrón de prueba (d). Si la separación supera el valor de referencia, ajústela siguiendo este procedimiento.
<Valor de referencia> Dentro de ±0,5mm.

2. Configure el modo de mantenimiento U034 y seleccione [Center Line] > [Cass3] o [Cass4].

Einstellen der Mittenlinie

1. Überprüfen Sie den Abstand zwischen der Papiermitte (3) und der Linie (4) auf der Testseite (d). Wenn der Abstand größer als der Bezugswert ist, den Abstand mit dem folgenden Verfahren einstellen.
<Bezugswert> Innerhalb ±0,5mm.

2. Aktivieren Sie den Wartungsmodus U034 und wählen Sie [Center Line] > [Cass3] oder [Cass4].

Regolazione della linea centrale

1. Controllare lo spazio tra il centro del foglio (3) e la linea (4) dello schema di prova (d). Se lo scostamento supera il valore di riferimento, regolare lo scostamento stesso seguendo questa procedura.
<Valore di riferimento> Entro ±0,5mm.

2. Impostare la modalità manutenzione U034 e selezionare [Center Line] > [Cass3] o [Cass4].

中心线调节

1. 确认纸张的中心（3）和测试样张（d）的线（4）之间的偏移值。如果偏移值超过标准值，则按照下列步骤进行调整。
〈标准值〉 ±0.5mm 以内
2. 进入维修保养模式 U034，把[Cetner Line] 〉 [Cass3]或[Cass4]。

센터라인 조정

1. 용지 중앙 (3) 과 테스트 패턴 (d) 의 라인 (4) 사이의 격차를 확인하십시오 . 차이가 기준치 외의 경우 다음의 순서대로 조정을 합니다 .
＜기준치＞ ±0.5mm 이내
2. 메인터넌스 모드 U034 를 설정하고 [Center Line] > [Cass3] 또는 [Cass4] 을 선택합니다 .

センターライン調整

1. 紙のセンター(3) とテストパターン (d) の線 (4) のずれを確認する。ずれが基準値外の場合、次の手順で調整をおこなう。
＜基準値＞ ±0.5mm 以内
2. メンテナンスモード U034 をセットし、[Center Line] 〉 [Cass3] または [Cass4] を選択する。

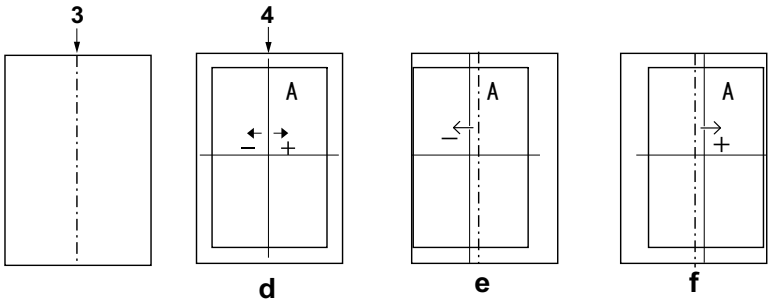

3. Adjust the values.
Test pattern (e) : Increase the setting value.
Test pattern (f) : Decrease the setting value.
Amount of change per step: 0.1mm
4. Press the [Start] key to confirm the setting value.
5. Print the test pattern.
6. Repeat the steps 2 to 5 above until the gap of line (4) in test pattern (d) is within the reference.
<Reference value> within ±0.5mm.

---

3. Régler les valeurs.
Mire d' essai (e) : Augmentez la valeur de réglage.
Mire d' essai (f) : Diminuez la valeur de réglage.
Changement par graduation d'échelle: 0,1mm
4. Appuyer sur la touche de [Départ] pour confirmer la valeur de réglage.
5. Imprimez le motif de test.
6. Répéter les étapes 2 à 5 ci-dessus jusqu'à ce que l'espace de la ligne (4) dans le motif de test (d) soit dans la référence.
<Valeur de référence> ±0,5mm max.

---

3. Ajuste los valores.
Patrón de prueba (e) : Aumente el valor de configuración.
Patrón de prueba (f) : Reduzca el valor de configuración.
Magnitud del cambio por incremento: 0,1mm
4. Pulse la tecla de [Inicio] para confirmar el valor de configuración.
5. Imprima el patrón de prueba.
6. Repita los pasos del 2 al 5 anteriores hasta que el espacio de línea (4) del patrón de prueba (d) esté dentro de los valores de referencia.
<Valor de referencia> dentro de ±0,5mm.

---

3. Die Werte einstellen.
Testmuster (e) : Den Einstellwert erhöhen.
Testmuster (f) : Den Einstellwert verringern.
Änderung pro Schritt: 0,1mm
4. Den Einstellwert durch Drücken der [Start]-Taste bestätigen.
5. Drucken Sie die Testseite aus.
6. Wiederholen Sie die Schritte 2 bis 5 solange, bis der Abstand der Linie (4) auf der Testseite (d) sich innerhalb der Referenz befindet.
<Bezugswert> Innerhalb ±0,5mm.

---

3. Regolare i valori.
Modello di prova (e) : Aumentare il valore dell'impostazione.
Modello di prova (f) : Diminuire il valore dell'impostazione.
Entità modifica per passo: 0,1mm
4. Premere il tasto di [Avvio] per confermare il valore dell'impostazione.
5. Stampare lo schema di prova.
6. Ripetere i punti da 2 a 5 sopra indicati fino a portare lo spazio della linea (4) nello schema di prova (d) all'interno del riferimento.
<Valore di riferimento> entro ±0,5mm

---

3. 调整设定值。
测试图案 (e) ：调高设定值。
测试图案 (f) ：调低设定值。
设定值的一个调整单位变化量：0.1㎜
4. 按 [开始] 键，以确定设定值。
5. 打印测试图案。
6. 重复步骤 2 ～ 5，直至测试样张 (d) 的线 (4) 的偏移值达到标准值以内。
〈标准值〉±0.5㎜以内

---

3. 설정치를 조정합니다 .
테트스 패턴 (e):설정치를 높입니다 .
테트스 패턴 (f):설정치를 내립니다 .
1 스텝당 변화량:0.1mm
4. [복사 / 시작] 키를 누르고 설정치를 확인합니다 .
5. 시험 패턴을 인쇄합니다 .
6. 테스트 패턴 (d) 에서 라인 (4) 의 격차가 기준 이내가 될 때까지 2 단계 ～ 5 단계를 반복 수행합니다 .
< 기준치 > ±0.5mm 이내

---

3. 設定値を調整する。
テストパターン (e) ：設定値を上げる。
テストパターン (f) ：設定値を下げる。
1 ステップ当たりの変化量:0.1㎜
4. [スタート] キーを押し、設定値を確定する。
5. テストパターンを出力する。
6. テストパターン (d) の線 (4) のずれが基準値内になるまで手順 2 ～ 5 を繰り返す。
〈基準値〉±0.5㎜以内



2020. 2
303V45671001

PF-7150

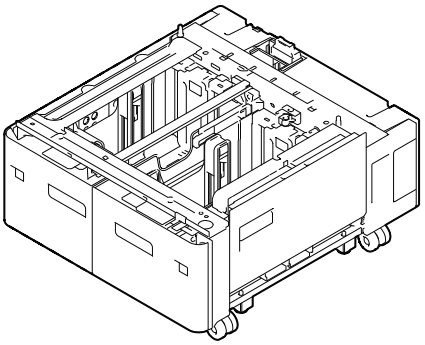

INSTALLATION GUIDE

GUIDE D'INSTALLATION

GUÍA DE INSTALACION

INSTALLATIONSANLEITUNG

GUIDA ALL'INSTALLAZIONE

安装手册

설치안내서

設置手順書

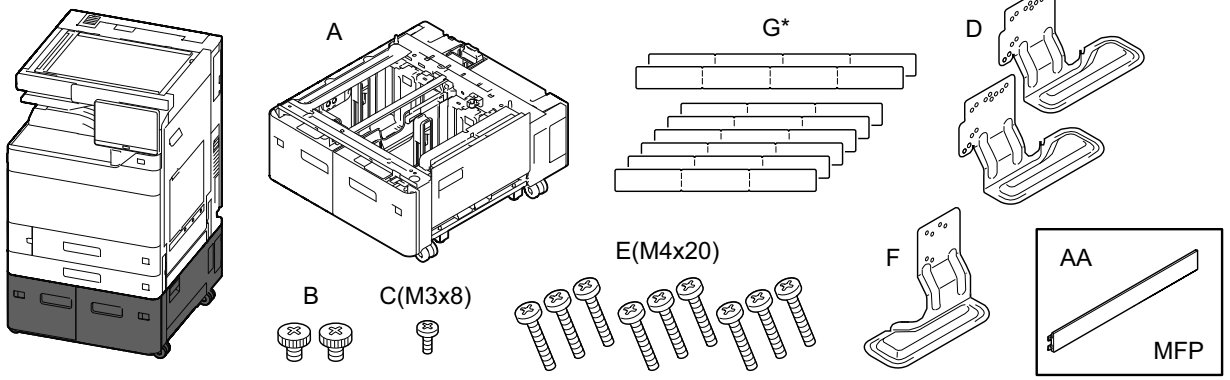

(EN) G*; Number and type of the parts supplied vary by destination.
(FR) G*; Le nombre et le type des pièces fournies varient selon la destination.
(ES) G*; El número y el tipo de piezas proporcionadas varían según el destino.
(DE) G*; Die Anzahl und Ausführung der enthaltenen Teile variiert je nach Auslieferungsort.
(IT) G*; Il numero e il tipo di parti fornite variano in base alla destinazione.
(ZHCN) G*; 根据地区，附带零件的种类和数量会有不同。
(KO) G*; 국가에 따라 동봉 수량과 종류가 다릅니다.
(JA) G*; 仕向地によって、同梱物の種類および数量が異なります。

(EN) Be sure to remove any tape and/or cushioning materials from the parts supplied.
(FR) Veillez à retirer les morceaux de bande adhésive et/ou les matériaux de rembourrage des pièces fournies.
(ES) Asegúrese de quitar todas las cintas y/o material amortiguador de las partes suministradas.
(DE) Stellen Sie sicher, dass sämtliche Klebebänder und/oder Polstermaterial von den gelieferten Teilen entfernt wurden.
(IT) Rimuovere tutti i nastri adesivi e/o i materiali di protezione dalle parti fornite.
(ZHCN) 如果附属品上带有固定胶带、缓冲材料时，请务必揭下。
(KO) 동봉품에 고정 테이프 , 완충재가 붙어 있는 경우에는 반드시 제거하십시오.
(JA) 同梱品に固定テープ、緩衝材がついている場合は、必ず取り外すこと。

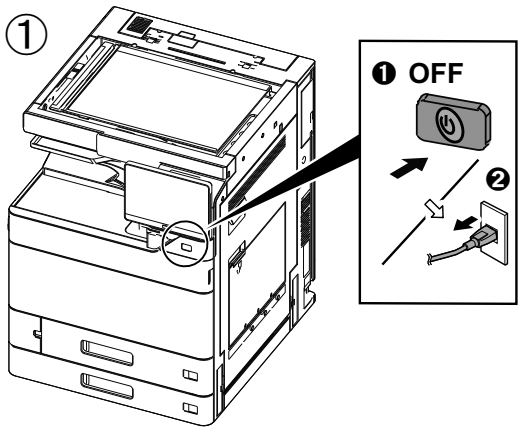

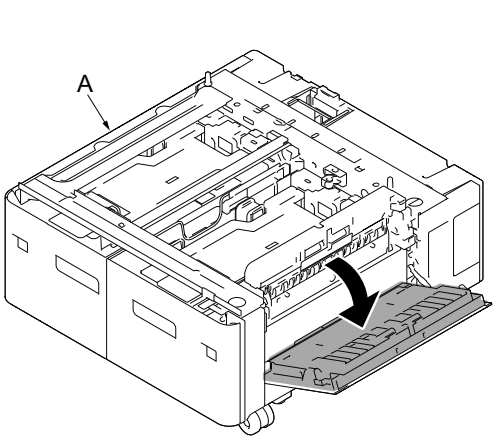

③

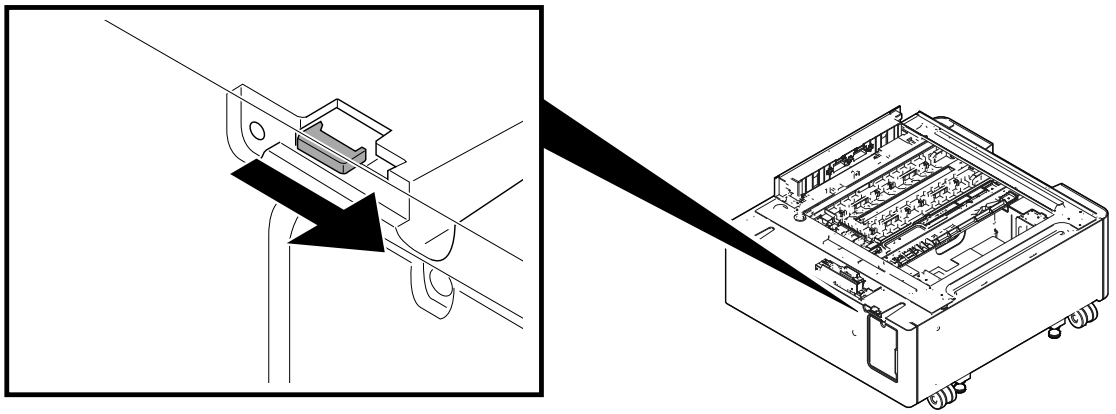

④

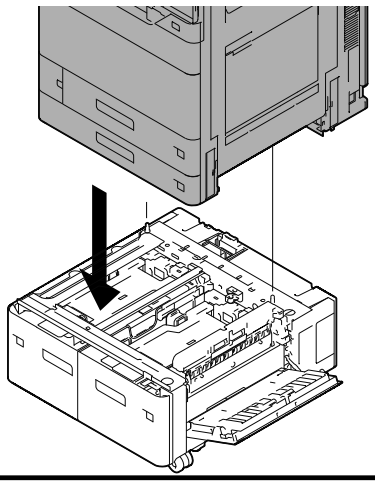

⑤

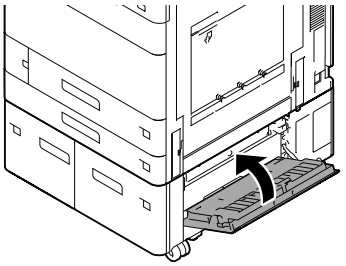

⑥

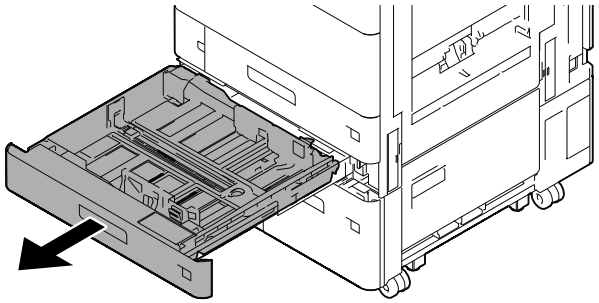

⑦

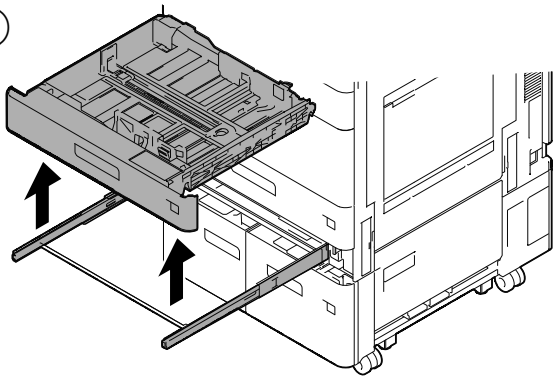

⑧

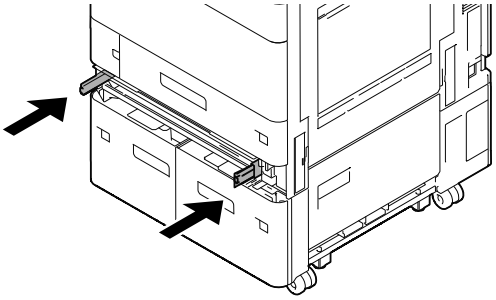

⑨

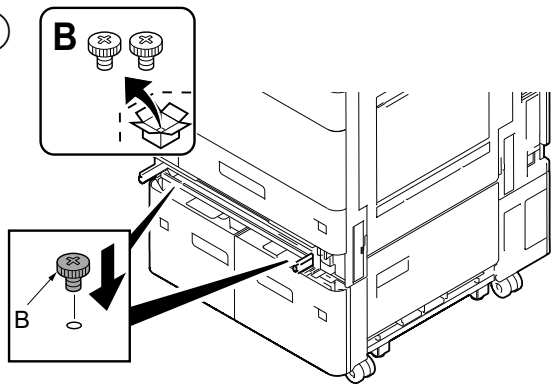

⑩

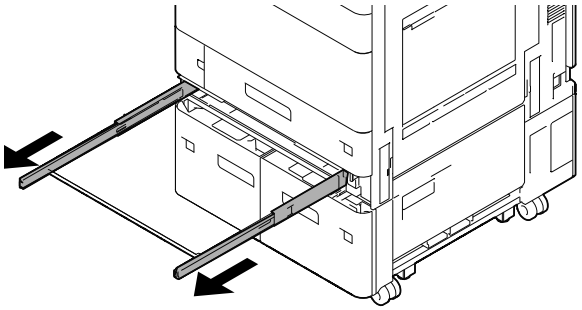

⑪

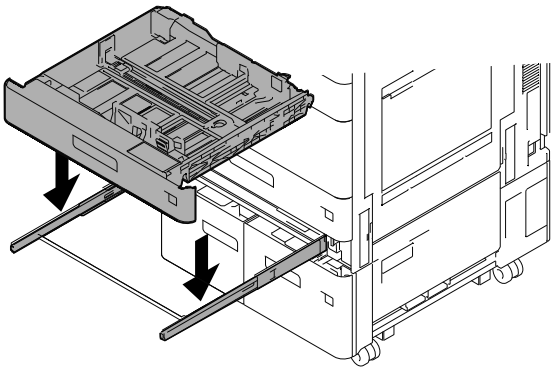

⑫

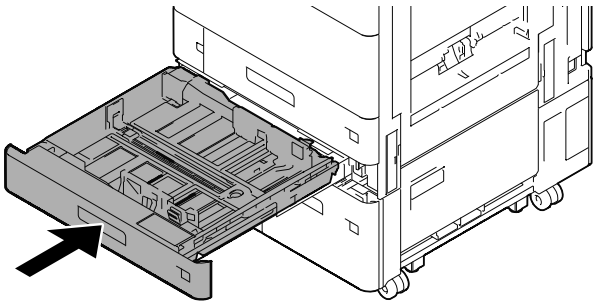

⑬

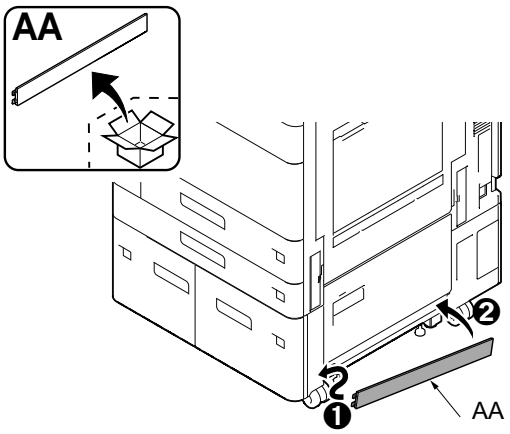

⑭

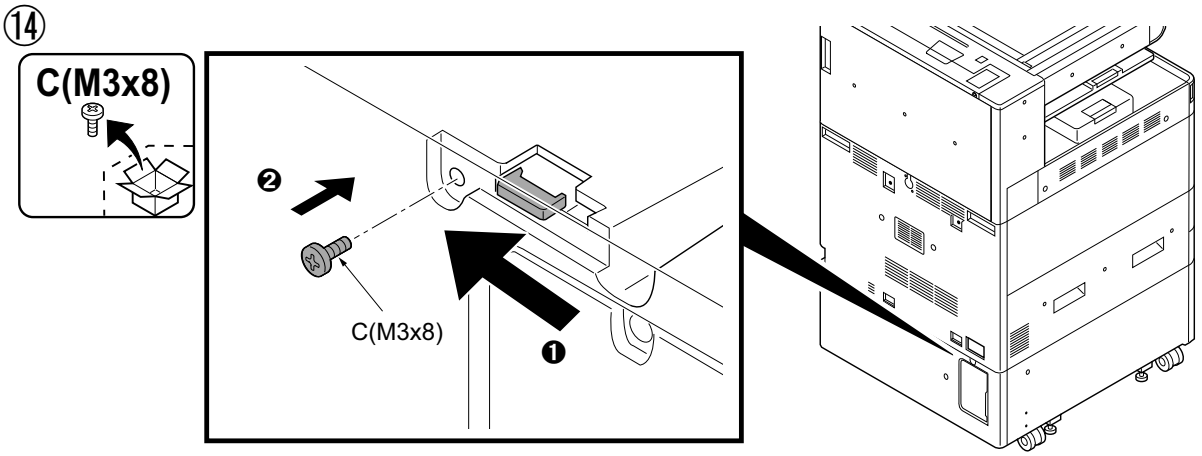

⑮

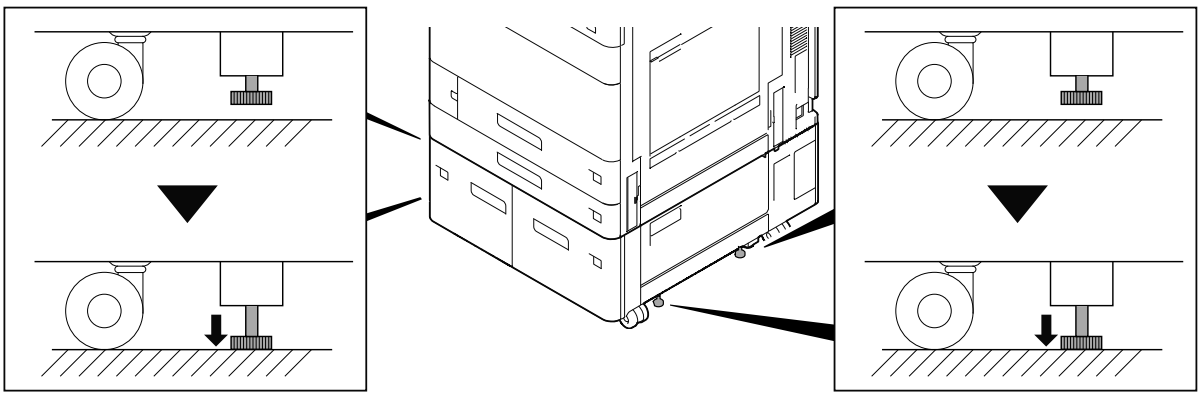

⑯

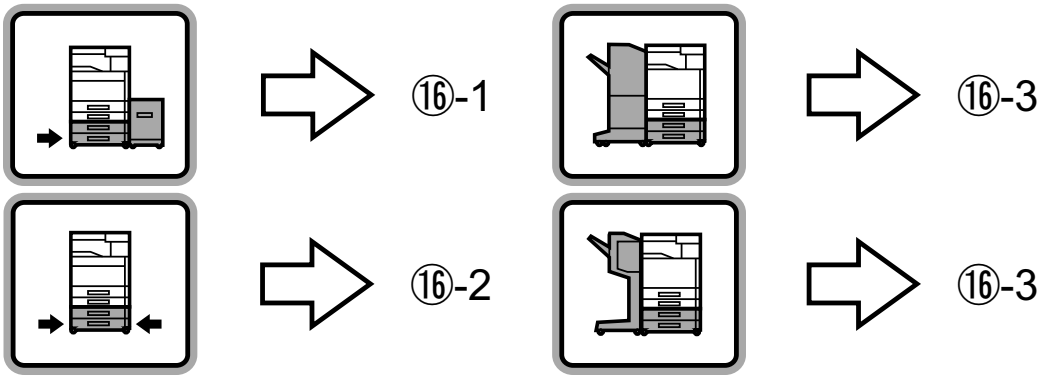

⑯-1

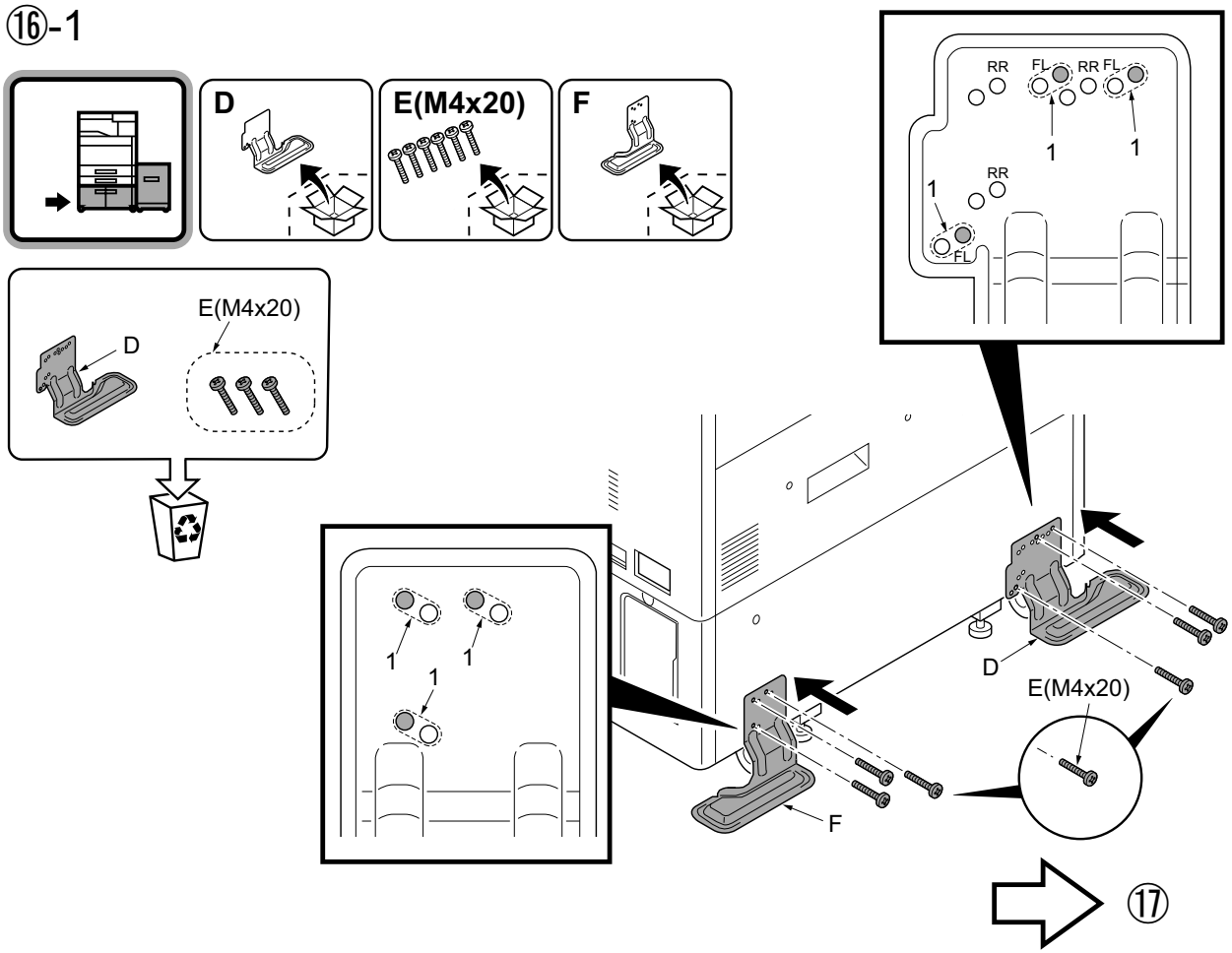

(EN) Select holes (1) and install each stopper (D,F) with 3 S Tite screws M4 × 20 (E) so that the stoppers will be grounded on the floor.

(FR) Sélectionner les trous (1) et installer chaque butée (D,F) avec 3 vis S Tite M4 × 20 (E) de sorte que les butées reposent sur le sol.

(ES) Seleccione los orificios (1) e instale cada tope (D,F) con los 3 tornillos S Tite M4 × 20 (E) de manera que los topes se conecten a tierra en el suelo.

(DE) Wählen Sie die Öffnungen (1) und befestigen Sie jeden Anschlag (D,F) mit den 3 S-Tite-Schrauben M4 × 20 (E) so an, dass die Anschläge am Boden aufsitzen.

(IT) Selezionare i fori (1) ed installare ogni fermo (D,F) con le 3 viti S Tite M4 × 20 (E) in modo che i fermi siano posti a terra sul pavimento.

(ZHCN) 在孔（1）处各用 3 颗 M4×20 紧固型 S 螺丝（E）安装限位器（D,F），使之和地板接触。

(KO) 전도방지쇠 (D,F) 가 바닥면에 접지될 수 있도록 구멍 (1) 을 선택해 나사 M4×20 S 타이트 (E) 각 3 개로 설치합니다 .

(JA) 転倒防止金具(D,F)が床面に接地するように、穴(1)を選択してビスM4×20 Sタイト(E)各3本で取り付ける。

⑯-2

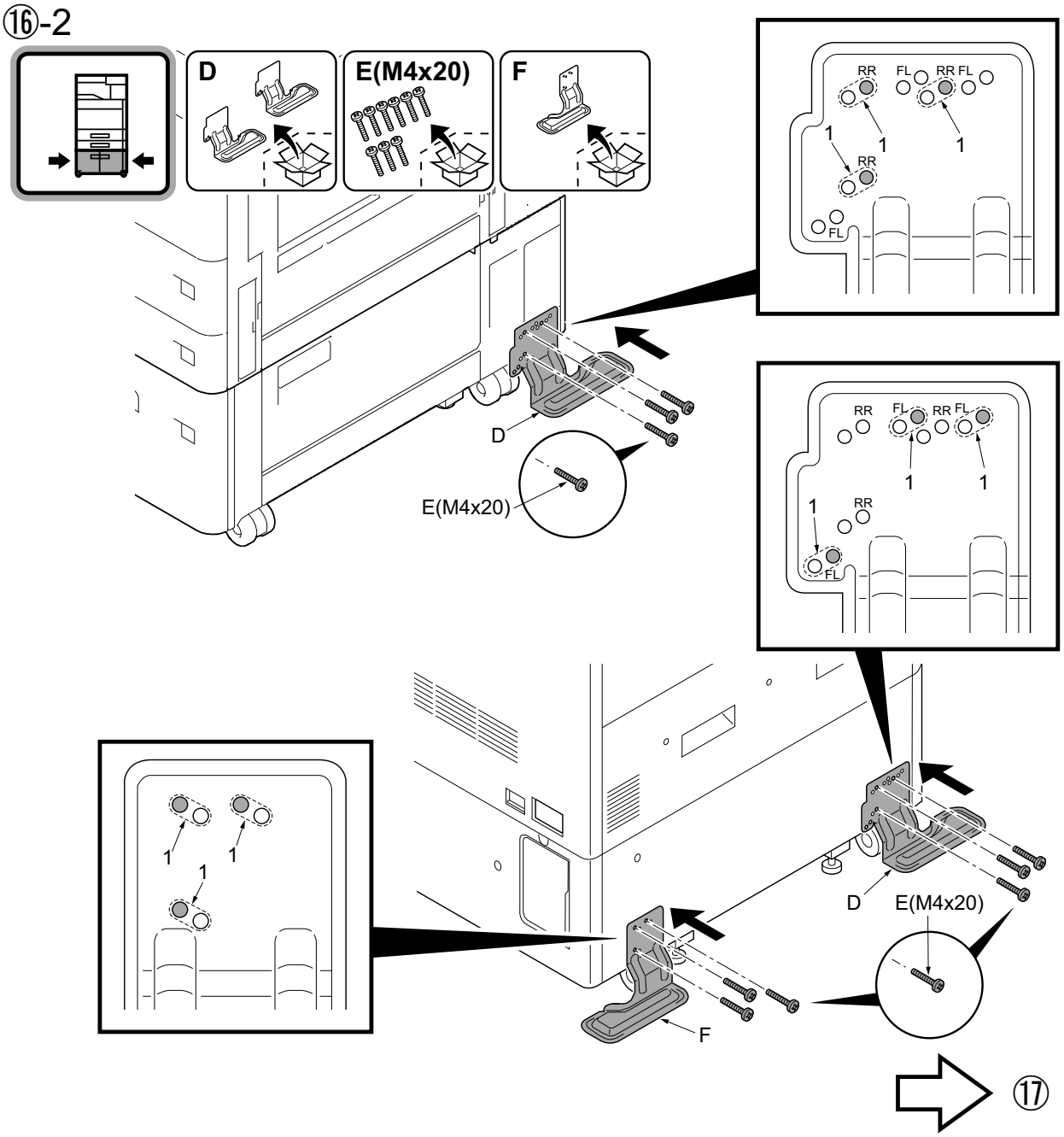

(EN) Select holes (1) and install each stopper (D,F) with 3 S Tite screws M4 × 20 (E) so that the stoppers will be grounded on the floor.

(FR) Sélectionner les trous (1) et installer chaque butée (D,F) avec 3 vis S Tite M4 × 20 (E) de sorte que les butées reposent sur le sol.

(ES) Seleccione los orificios (1) e instale cada tope (D,F) con los 3 tornillos S Tite M4 × 20 (E) de manera que los topes se conecten a tierra en el suelo.

(DE) Wählen Sie die Öffnungen (1) und befestigen Sie jeden Anschlag (D,F) mit den 3 S-Tite-Schrauben M4 × 20 (E) so an, dass die Anschläge am Boden aufsitzen.

(IT) Selezionare i fori (1) ed installare ogni fermo (D,F) con le 3 viti S Tite M4 × 20 (E) in modo che i fermi siano posti a terra sul pavimento.

(ZHCN) 在孔（1）处各用 3 颗 M4×20 紧固型 S 螺丝（E）安装限位器（D,F），使之和地板接触。

(KO) 전도방지쇠 (D,F) 가 바닥면에 접지될 수 있도록 구멍 (1) 을 선택해 나사 M4×20 S 타이트 (E) 각 3 개로 설치합니다 .

(JA) 転倒防止金具(D,F)が床面に接地するように、穴(1)を選択してビスM4×20 Sタイト(E)各3本で取り付ける。

⑯-3

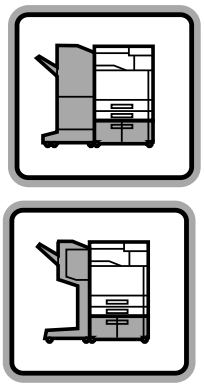

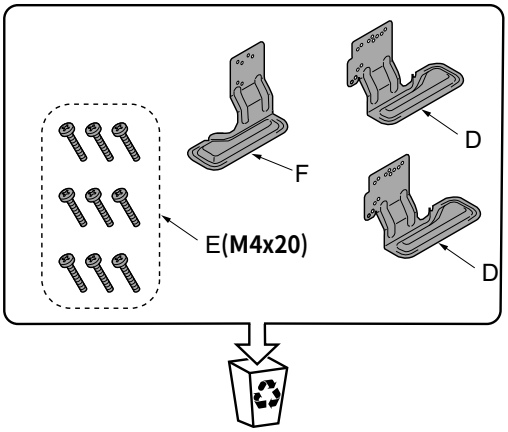

⑰

⑰

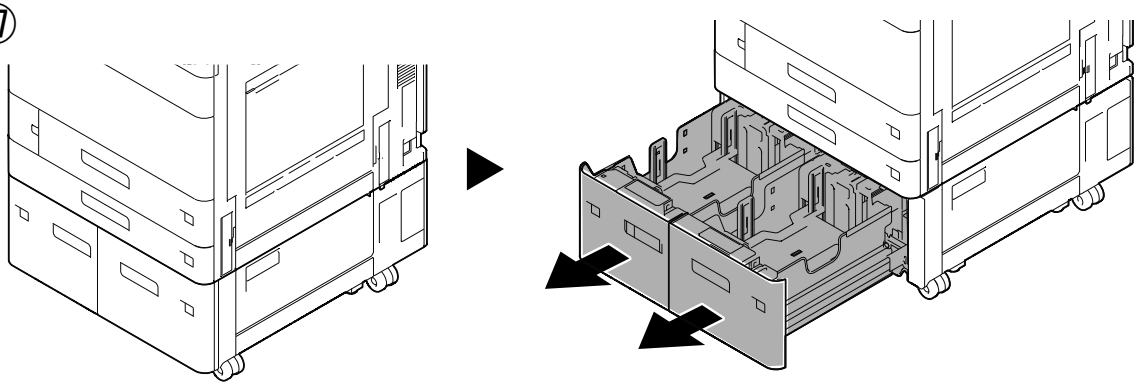

⑱

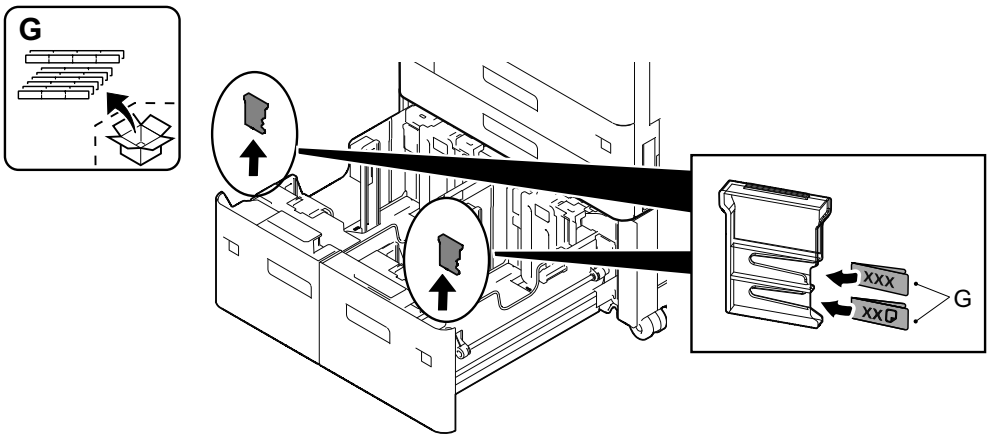

⑲

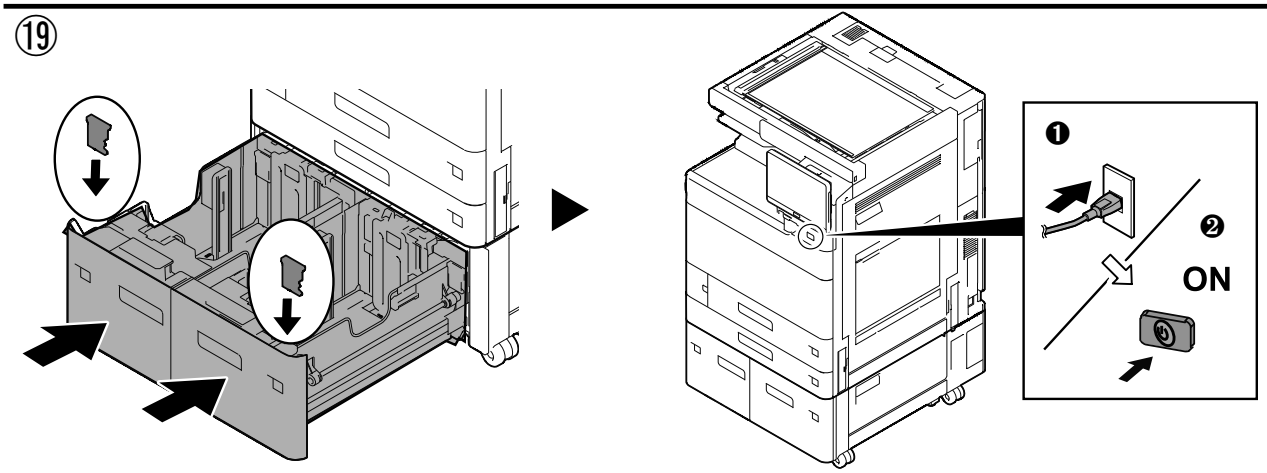

(EN) Changing paper size

(FR) Modification du format du papier

(ES) Cómo cambiar el tamaño de papel

(DE) Ändern des Papierformats

(IT) Cambio del formato della carta

(ZHCN) 纸张尺寸更改

(KO) 용지크기 변경

(JA) 用紙サイズ変更

A4 ➡ B5

①

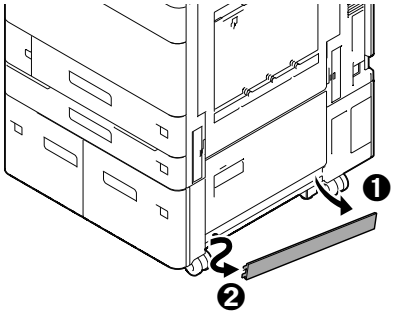

②

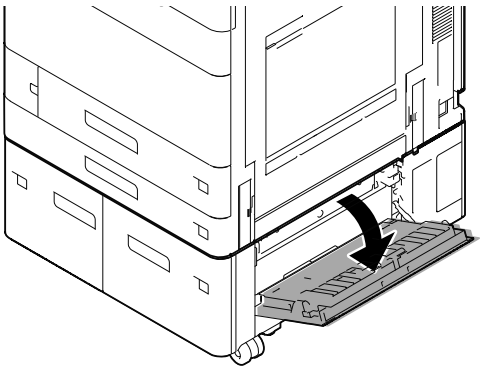

③

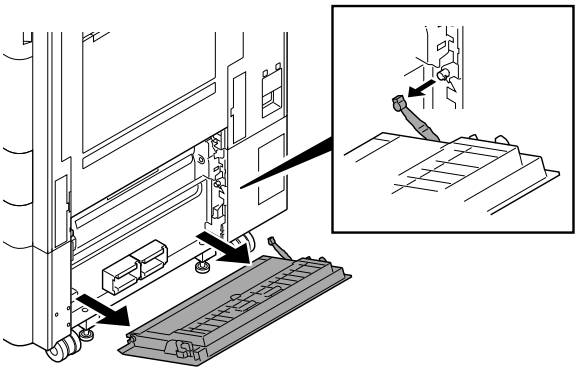

④

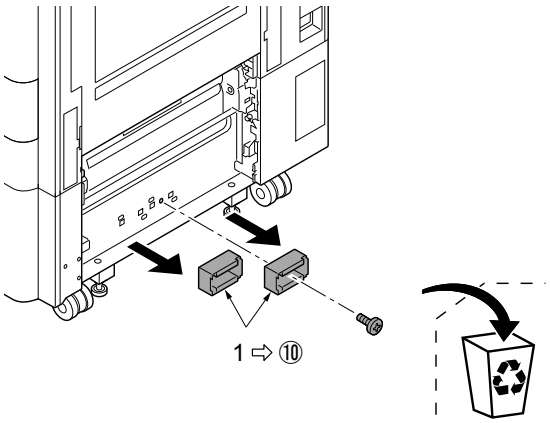

⑤

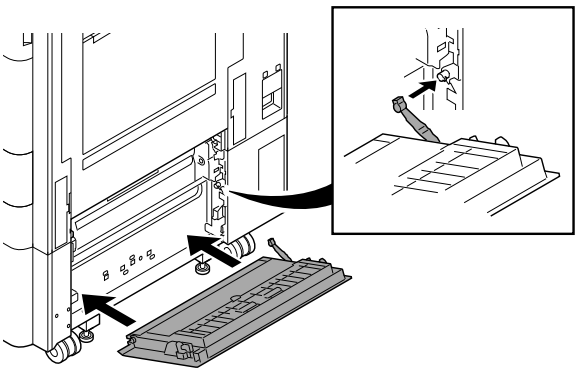

⑥

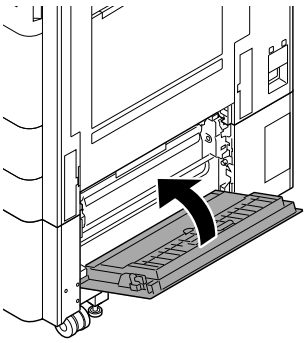

⑦

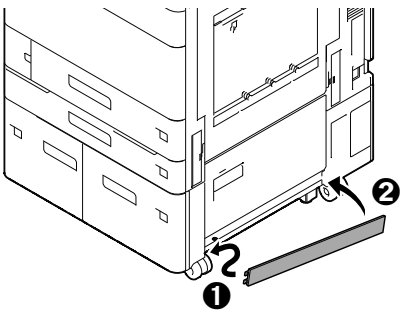

⑧

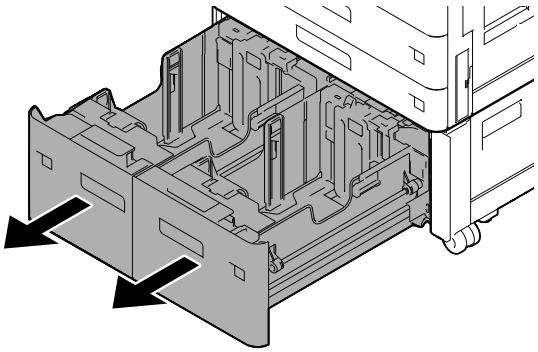

⑨

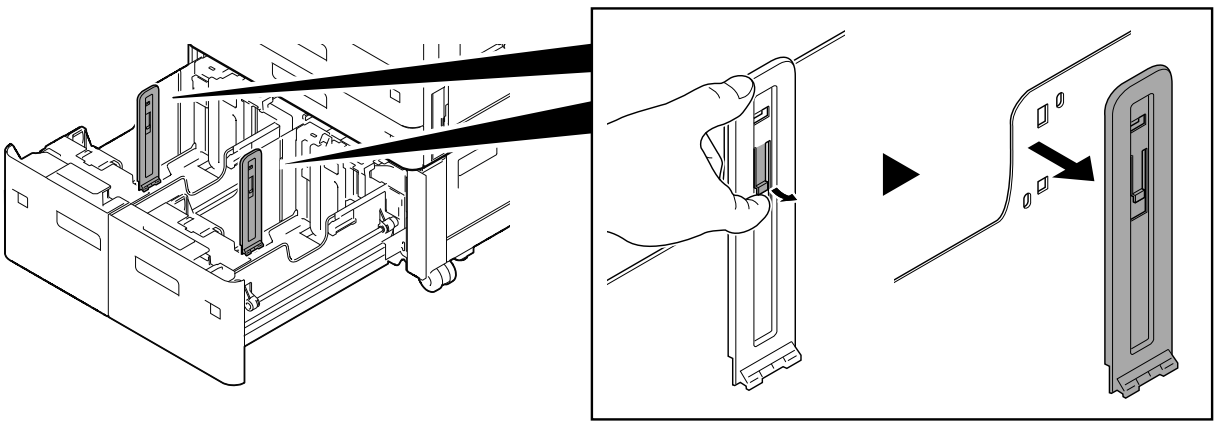

⑩

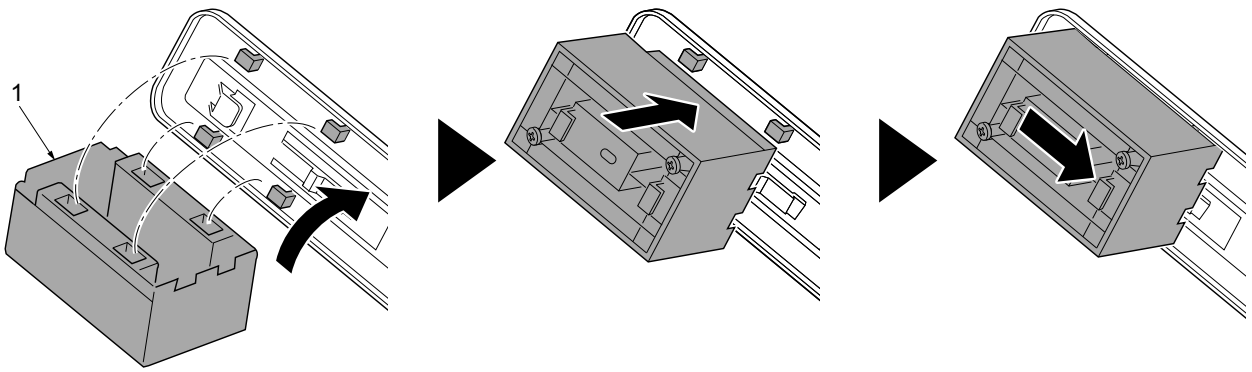

⑪

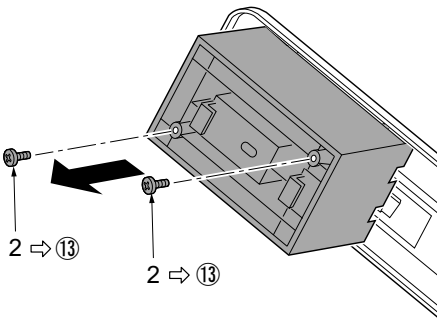

⑫

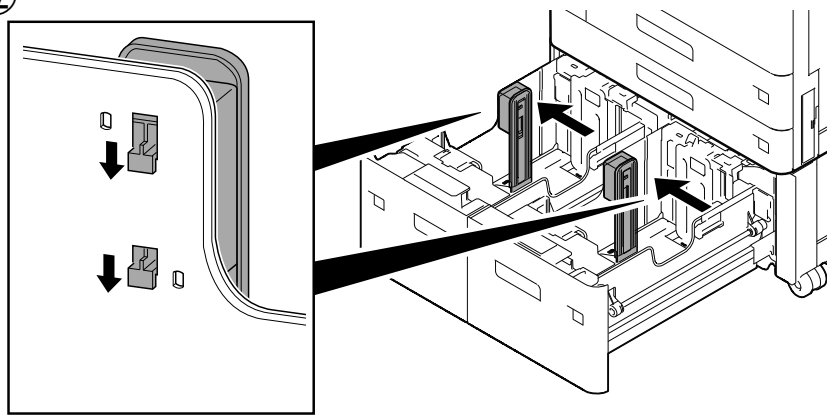

⑬

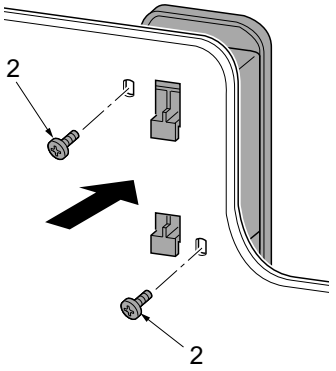
2
2

⑭

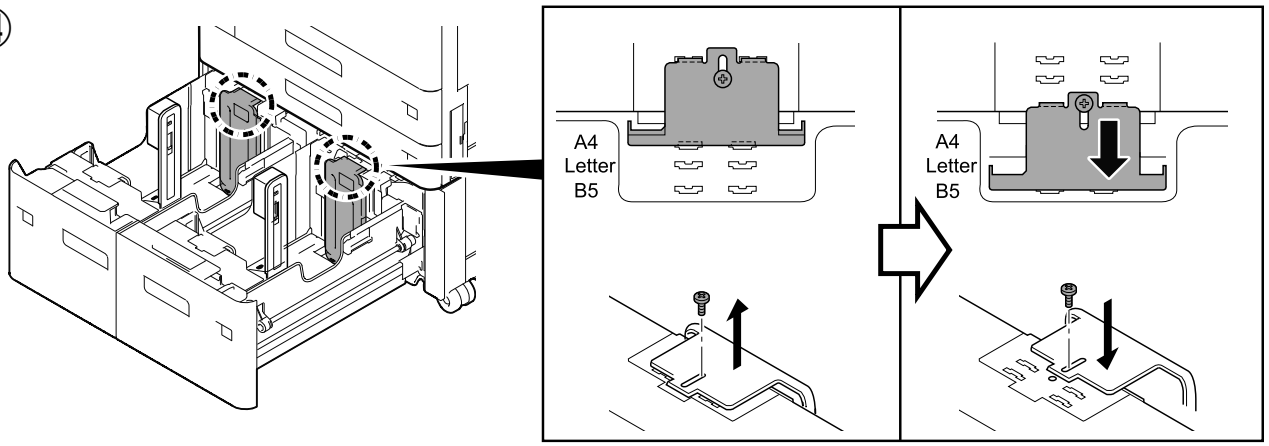
A4
Letter
B5
A4
Letter
B5

⑮

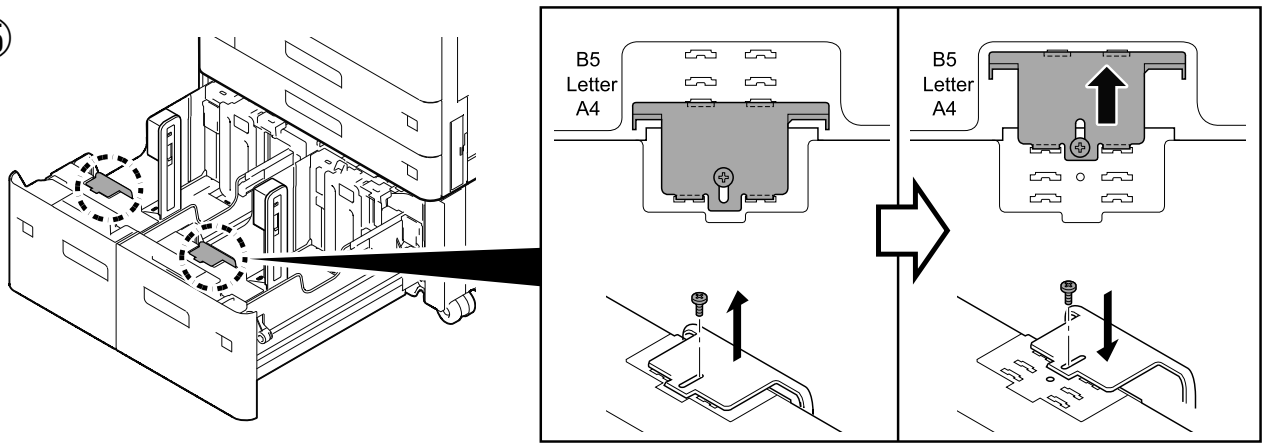
B5
Letter
A4
B5
Letter
A4

⑯

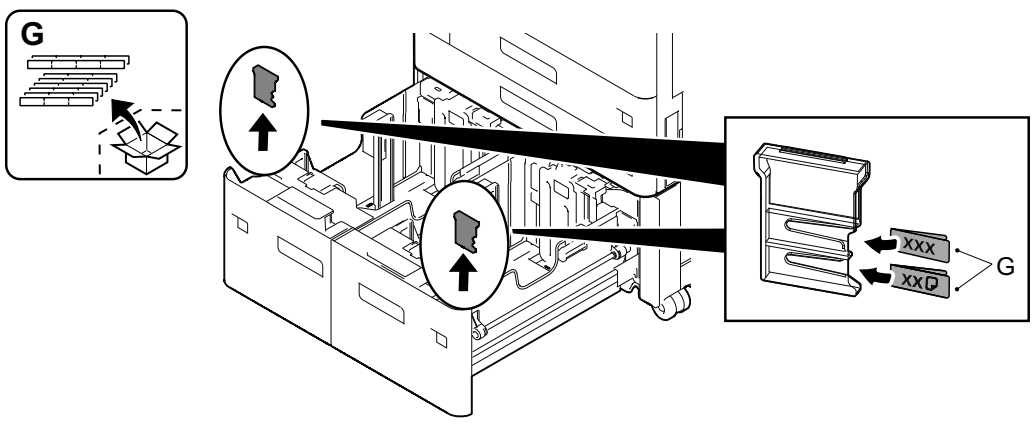
G
XXX
XXX
G

⑰

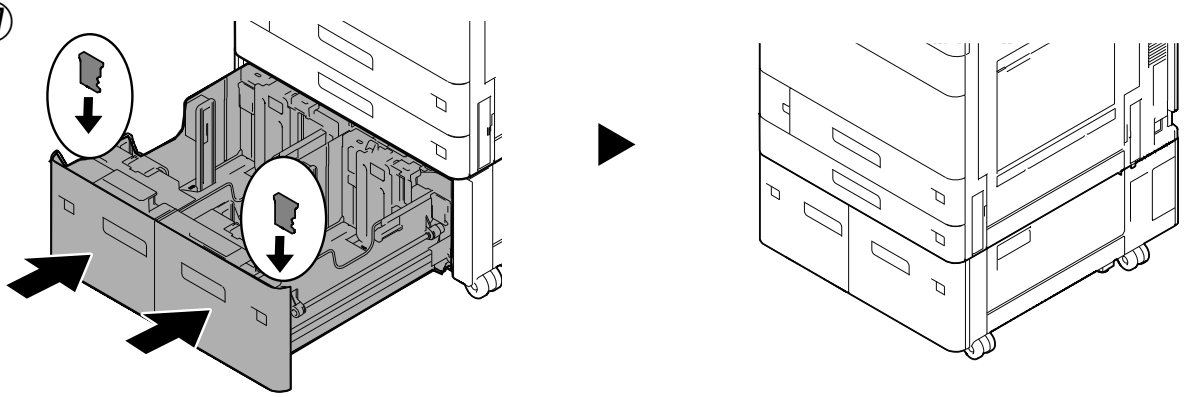

⑱

(EN) Run maintenance mode U208 and set the paper size.

(FR) Exécuter le mode maintenance U208 et définir le format du papier.

(ES) Active el modo de mantenimiento U208 y ajuste el tamaño de papel.

(DE) Führen Sie den Wartungsmodus U208 aus und stellen Sie das Papierformat ein.

(IT) Eseguire la modalita manutenzione U208 e impostare il formato carta.

(ZHCN) 执行维修模式U208，进行纸张尺寸的设定。

(KO) 메인터넌스 모드 U208을 실행해 용지크기 설정을 합니다.

(JA) メンテナンスモードU208を実行し、用紙サイズの設定をおこなう。

A4 ➡ Letter

①

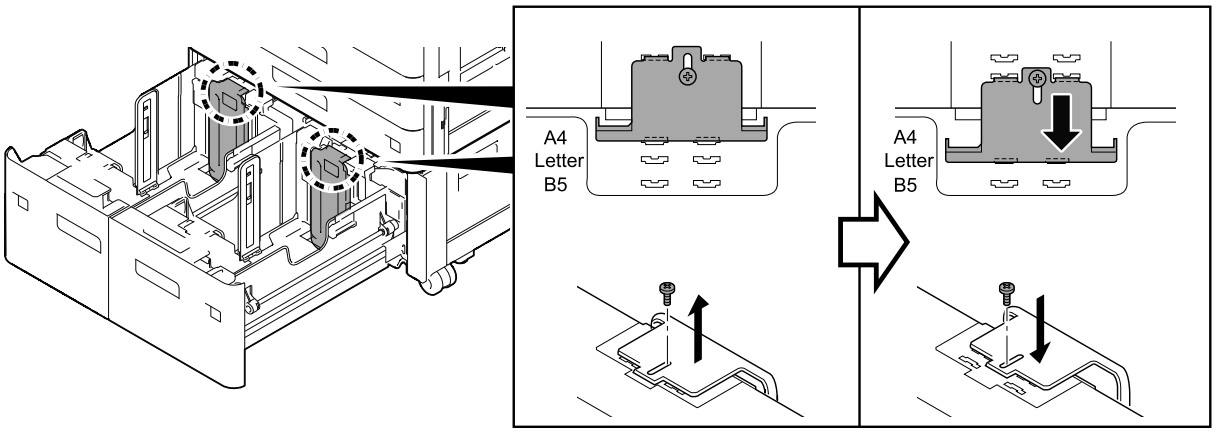

②

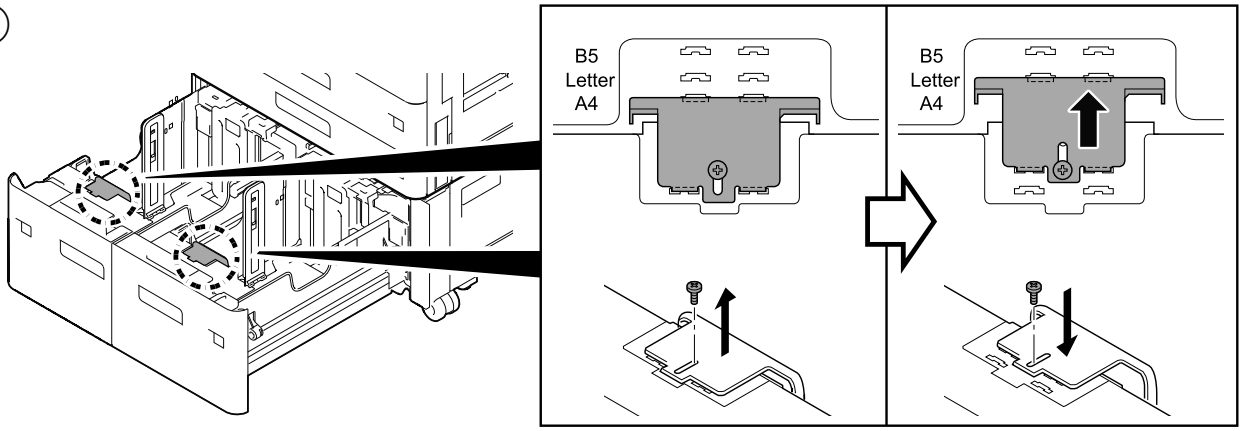

③

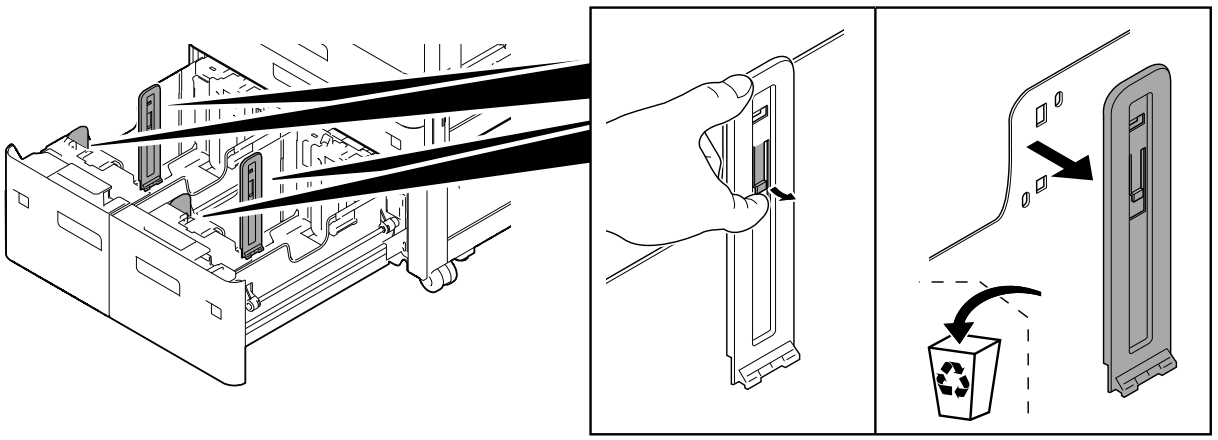

④

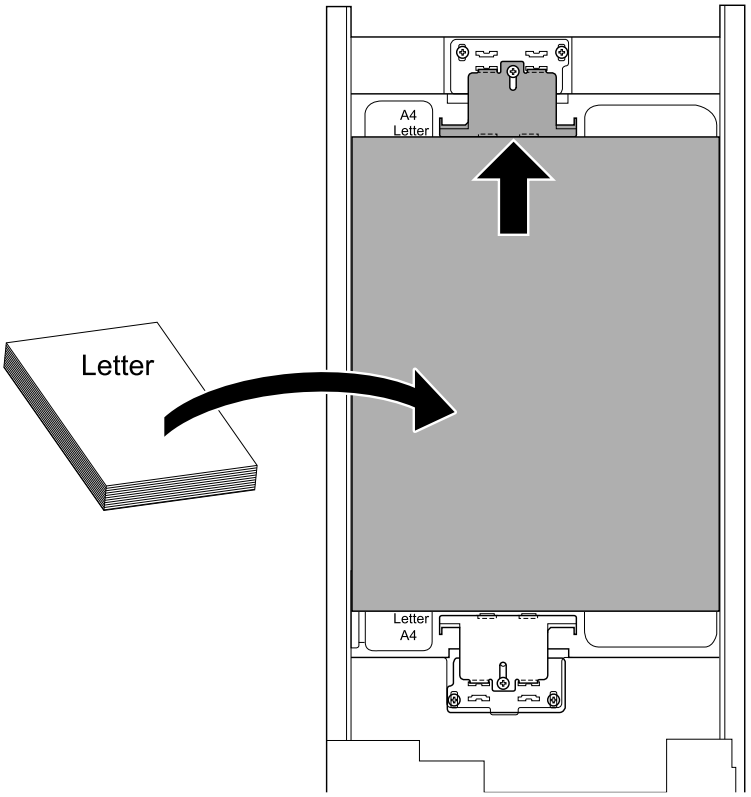
A4
Letter
Letter
Letter
A4

⑤

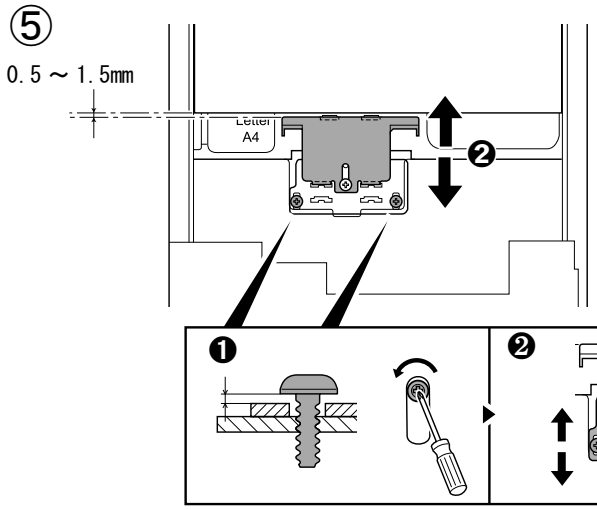
0.5 ~ 1.5mm
Letter
A4
❷
❶
❷
❸

⑥

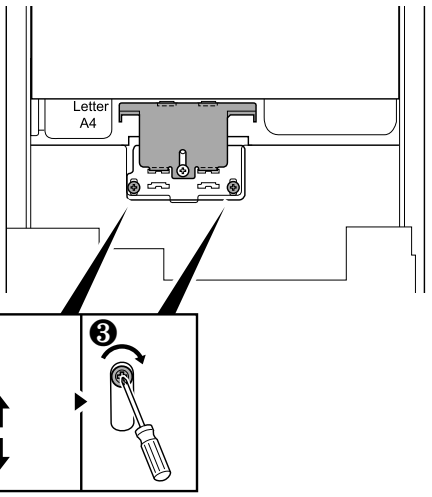
Letter
A4

⑦

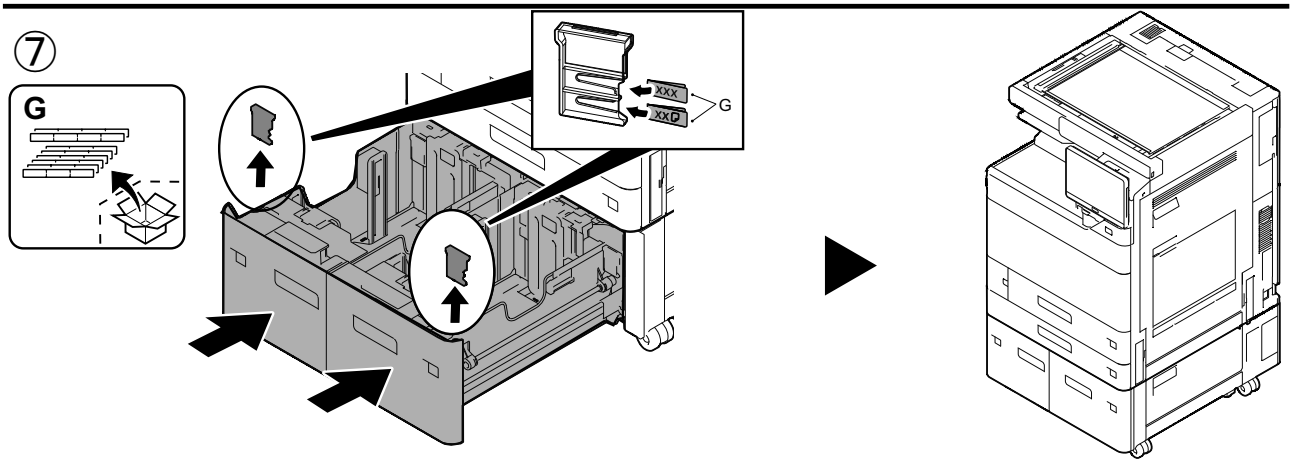
G
XXX
XXD
G

⑧

(EN) Run maintenance mode U208 and set the paper size.

(FR) Exécuter le mode maintenance U208 et définir le format du papier.

(ES) Active el modo de mantenimiento U208 y ajuste el tamaño de papel.

(DE) Führen Sie den Wartungsmodus U208 aus und stellen Sie das Papierformat ein.

(IT) Eseguire la modalita manutenzione U208 e impostare il formato carta.

(ZHCN) 执行维修模式U208，进行纸张尺寸的设定。

(KO) 메인터넌스 모드 U208을 실행해 용지크기 설정을 합니다.

(JA) メンテナンスモードU208を実行し、用紙サイズの設定をおこなう。

Letter ➡ A4

①

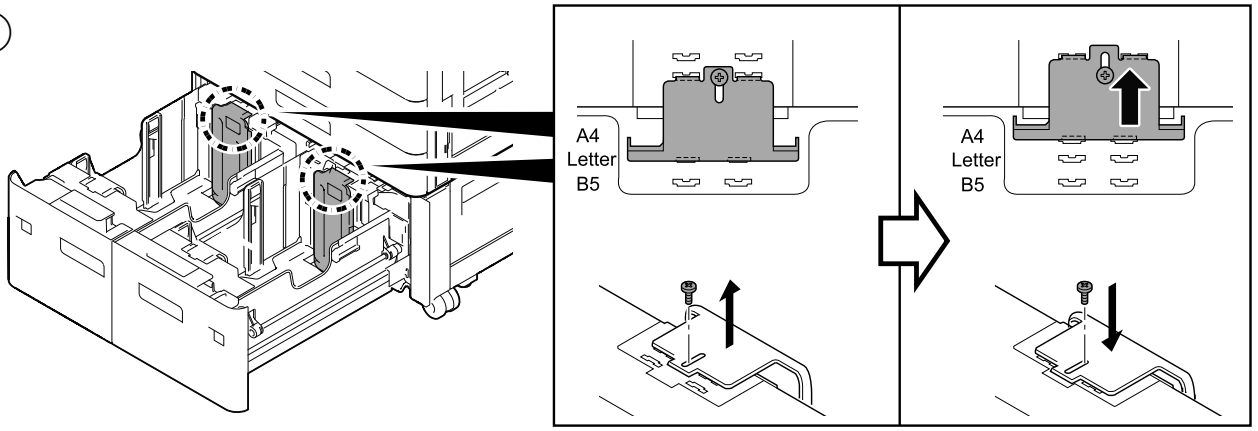

②

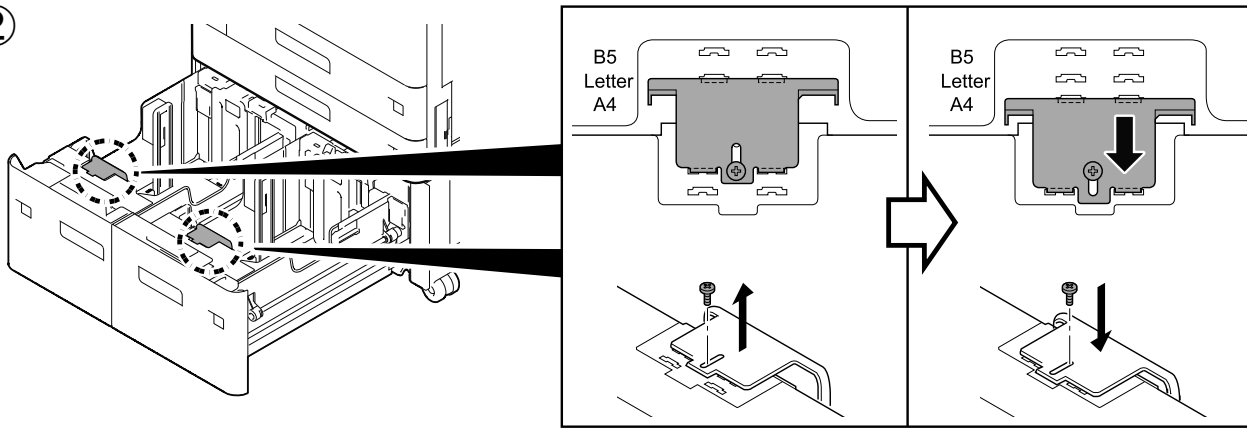

③

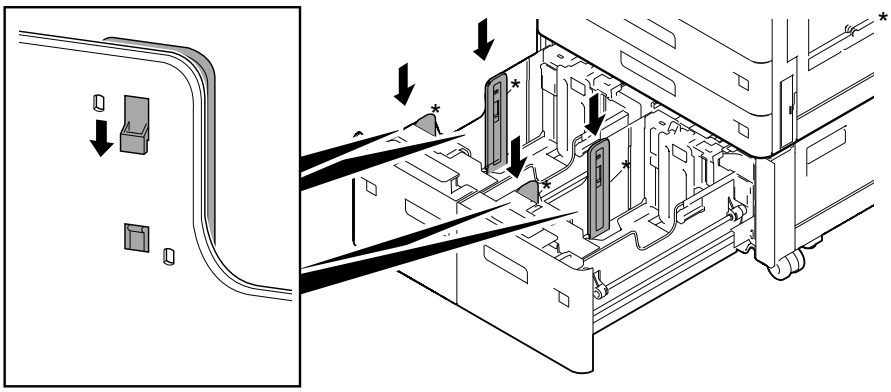

* Service Parts
Parts No.
303RC1008_

④

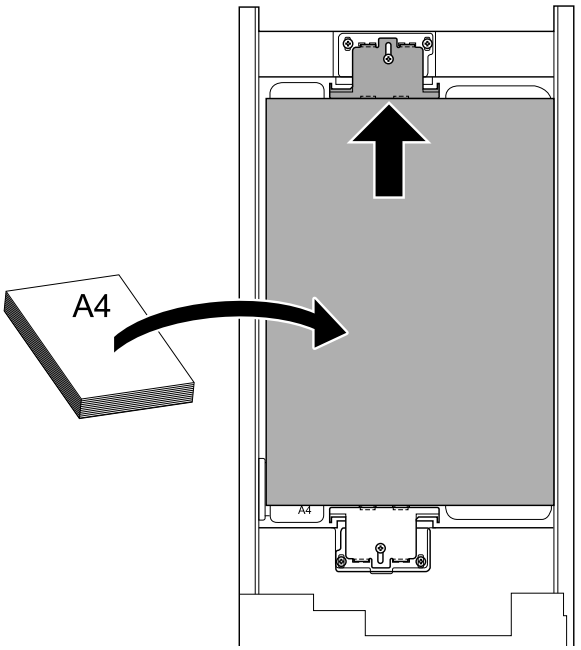

⑤

0.5 ～ 1.5mm

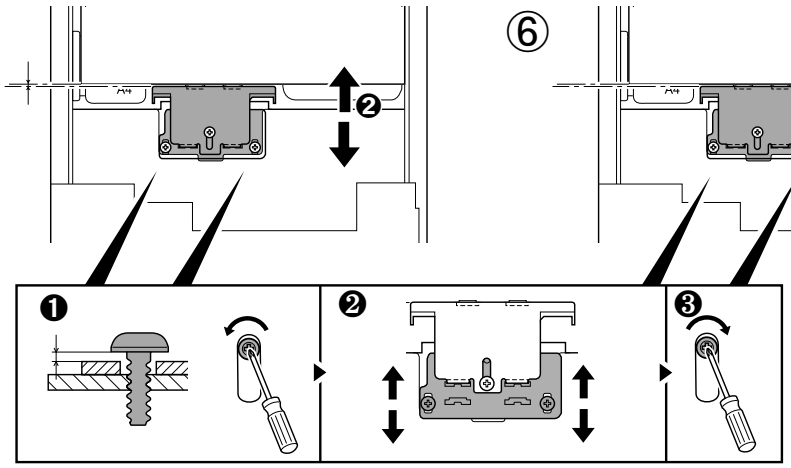

⑥

⑦

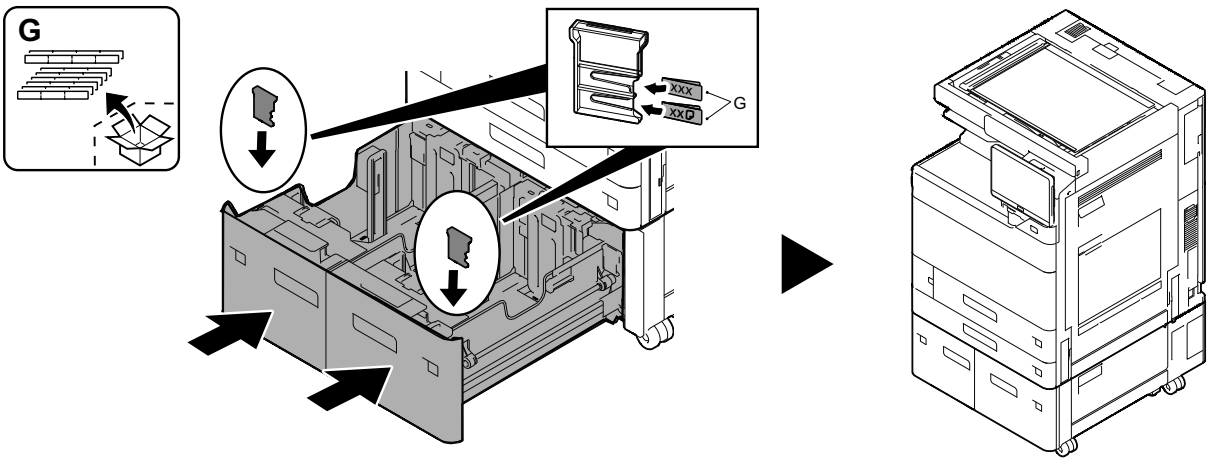

⑧ (EN) Run maintenance mode U208 and set the paper size.

(FR) Exécuter le mode maintenance U208 et définir le format du papier.

(ES) Active el modo de mantenimiento U208 y ajuste el tamaño de papel.

(DE) Führen Sie den Wartungsmodus U208 aus und stellen Sie das Papierformat ein.

(IT) Eseguire la modalita manutenzione U208 e impostare il formato carta.

(ZHCN) 执行维修模式U208，进行纸张尺寸的设定。

(KO) 메인터넌스 모드 U208을 실행해 용지크기 설정을 합니다.

(JA) メンテナンスモードU208を実行し、用紙サイズの設定をおこなう。

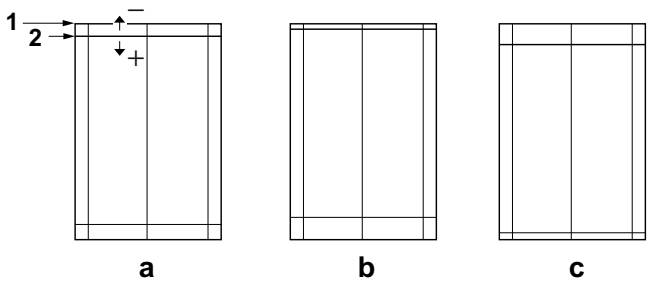

(EN)
Adjusting the leading edge timing
1. Check the gap between the paper leading edge (1) and the line (2) of test pattern (a). If the gap exceeds the reference value, adjust the gap according to the following procedure.
<Reference value> 20mm±1.5mm
2. Set the maintenance mode U034 and select [Start Position] > [Cass(L)] .

(FR)
Réglage de la synchronisation du bord de tête
1. Vérifier l'espace entre le bord de tête du papier (1) et la ligne (2) du motif de (a). Si l'écart excède la valeur de référence, le régler selon la procédure suivante.
<Valeur de référence> 20mm±1.5mm
2. Passez en mode maintenance U034 et sélectionnez [Start Position] > [Cass(L)] .

(ES)
Ajuste de la sincronización del borde superior
1. Compruebe el espacio entre el borde superior del papel (1) y la línea (2) del patrón de prueba (a). Si la separación supera el valor de referencia, ajústela siguiendo este procedimiento.
<Valor de referencia> 20mm±1.5mm
2. Configure el modo de mantenimiento U034 y seleccione [Start Position] > [Cass(L)] .

(DE)
Einstellen des Vorderkanten-Timing
1. Überprüfen Sie den Abstand zwischen der Papier-Vorderkante (1) und der Linie (2) auf der Testseite (a). Wenn der Abstand größer als der Bezugswert ist, den Abstand mit dem folgenden Verfahren einstellen.
<Bezugswert>20mm±1.5mm
2. Aktivieren Sie den Wartungsmodus U034 und wählen Sie [Start Position] > [Cass(L)] .

(IT)
Regolazione della sincronizzazione del bordo superiore
1. Controllare lo spazio tra il bordo superiore del foglio (1) e la linea (2) dello schema di prova (a). Se lo scostamento supera il valore di riferimento, regolare lo scostamento stesso seguendo questa procedura.
<Valore di riferimento> 20mm±1.5mm
2. Impostare la modalità manutenzione U034 e selezionare [Start Position] > [Cass(L)].

(ZHCN)
前端对位调节
1. 确认纸张的前端（1）和测试样张（a）的线（2）之间的偏移值。如果偏移值超过标准值，则按照下列步骤进行调整。
＜标准值＞ 20mm±1.5mm
2. 进入维修保养模式 U034，把[Start Position] ＞ [Cass(L)]。

(KO)
선단 타이밍 조정
1. 용지 선단 (1) 과 테스트 패턴 (a) 의 라인 (2) 사이의 격차를 확인하십시오 . 차이가 기준치 외의 경우 다음의 순서대로 조정을 합니다 .
＜기준치＞ 20mm±1.5mm
2. 메인터넌스 모드 U034 를 설정하고 [Start Position] > [Cass(L)] 을 선택합니다 .

(JA)
先端タイミング調整
1. 紙の先端 (1) とテストパターン (a) の線 (2) のずれを確認する。ずれが基準値外の場合、次の手順で調整をおこなう。
＜基準値＞ 20mm±1.5mm
2. メンテナンスモード U034 をセットし、[Start Position] ＞ [Cass(L)] を選択する。

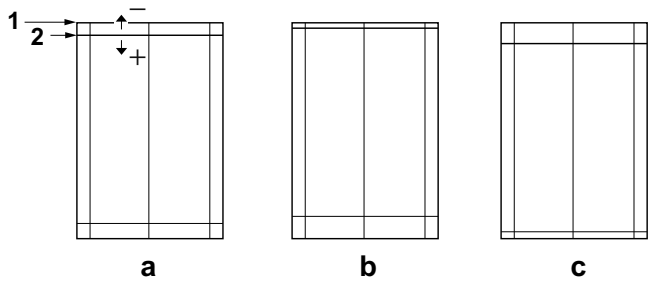

3. Adjust the values.
Test pattern (b) : Increase the setting value.
Test pattern (c) : Decrease the setting value.
Amount of change per step: 0.1mm
4. Press the [Start] key to confirm the setting value.
5. Print the test pattern.
6. Repeat the steps 2 to 5 above until the gap of line (2) in test pattern (a) is within the reference.
<Reference value> 20mm±1.5mm

---

3. Régler les valeurs.
Mire d' essai (b) : Augmentez la valeur de réglage.
Mire d' essai (c) : Diminuez la valeur de réglage.
Changement par graduation d'échelle: 0,1mm
4. Appuyer sur la touche de [Départ] pour confirmer la valeur de réglage.
5. Imprimez le motif de test.
6. Répéter les étapes 2 à 5 ci-dessus jusqu'à ce que l'espace de la ligne (2) dans le motif de test (a) soit dans la référence.
<Valeur de référence> 20mm±1.5mm

---

3. Ajuste los valores.
Patrón de prueba (b) : Aumente el valor de configuración.
Patrón de prueba (c) : Reduzca el valor de configuración.
Magnitud del cambio por incremento: 0,1mm
4. Pulse la tecla de [Inicio] para confirmar el valor de configuración.
5. Imprima el patrón de prueba.
6. Repita los pasos del 2 al 5 anteriores hasta que el espacio de línea (2) del patrón de prueba (a) esté dentro de los valores de referencia.
<Valor de referencia> De 20mm±1.5mm

---

3. Die Werte einstellen.
Testmuster (b) : Den Einstellwert erhöhen.
Testmuster (c) : Den Einstellwert verringern.
Änderung pro Schritt: 0,1mm
4. Den Einstellwert durch Drücken der [Start]-Taste bestätigen.
5. Drucken Sie die Testseite aus.
6. Wiederholen Sie die Schritte 2 bis 5 solange, bis der Abstand der Linie (2) auf der Testseite (a) sich innerhalb der Referenz befindet.
<Bezugswert> 20mm±1.5mm

---

3. Regolare i valori.
Modello di prova (b) : Aumentare il valore dell'impostazione.
Modello di prova (c) : Diminuire il valore dell'impostazione.
Entità modifica per passo: 0,1mm
4. Premere il tasto di [Avvio] per confermare il valore dell'impostazione.
5. Stampare lo schema di prova.
6. Ripetere i punti da 2 a 5 sopra indicati fino a portare lo spazio della linea (2) nello schema di prova (a) all'interno del riferimento.
<Valore di riferimento> 20mm±1.5mm

---

3. 调整设定值。
测试图案 (b) ：调高设定值。
测试图案 (c) ：调低设定值。
设定值的一个调整单位变化量：0.1㎜
4. 按 [开始] 键，以确定设定值。
5. 打印测试图案。
6. 重复步骤 2 ～ 5，直至测试样张 (a) 的线 (2) 的偏移值达到标准值以内。
〈标准值〉 20㎜±1.5㎜

---

3. 설정치를 조정합니다 .
테트스 패턴 (b) :설정치를 높입니다 .
테트스 패턴 (c) :설정치를 내립니다 .
1 스텝당 변화량:0.1mm
4. [복사 / 시작] 키를 누르고 설정치를 확인합니다 .
5. 시험 패턴을 인쇄합니다 .
6. 테스트 패턴 (a) 에서 라인 (2) 의 격차가 기준 이내가 될 때까지 2 단계 ～ 5 단계를 반복 수행합니다 .
＜기준치＞ 20mm±1.5mm

---

3. 設定値を調整する。
テストパターン (b) ：設定値を上げる。
テストパターン (c) ：設定値を下げる。
1 ステップ当たりの変化量:0.1㎜
4. [スタート] キーを押し、設定値を確定する。
5. テストパターンを出力する。
6. テストパターン (a) の線 (2) のずれが基準値内になるまで手順 2 ～ 5 を繰り返す。
〈基準値 〉20㎜±1.5㎜

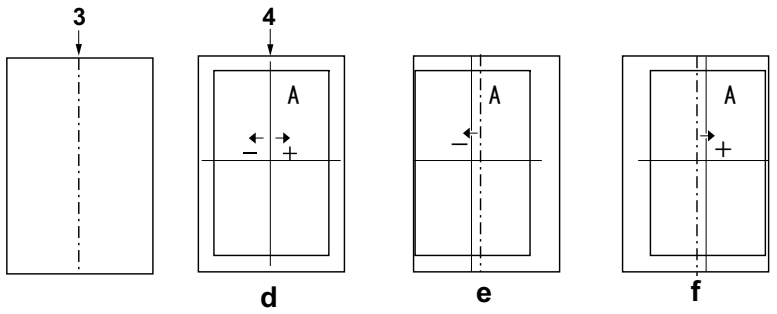

Adjusting the center line

1. Check the gap between the paper center (3) and the line (4) of test pattern (d). If the gap exceeds the reference value, adjust the gap according to the following procedure.
<Reference value> within ±0.5mm.

2. Set the maintenance mode U034 and select [LSU Line] > [Cass3] or [Cass4].

Réglage de l'axe

1. Vérifier l'espace entre le centre du papier (3) et la ligne (4) du motif de (d). Si l'écart excède la valeur de référence, le régler selon la procédure suivante.
<Valeur de référence> ±0,5mm max.

2. Passez en mode maintenance U034 et sélectionnez [Center Line] > [Cass3] ou [Cass4].

Ajuste de la línea central

1. Compruebe el espacio entre el centro del papel (3) y la línea (4) del patrón de prueba (d). Si la separación supera el valor de referencia, ajústela siguiendo este procedimiento.
<Valor de referencia> Dentro de ±0,5mm.

2. Configure el modo de mantenimiento U034 y seleccione [Center Line] > [Cass3] o [Cass4].

Einstellen der Mittenlinie

1. Überprüfen Sie den Abstand zwischen der Papiermitte (3) und der Linie (4) auf der Testseite (d). Wenn der Abstand größer als der Bezugswert ist, den Abstand mit dem folgenden Verfahren einstellen.
<Bezugswert> Innerhalb ±0,5mm.

2. Aktivieren Sie den Wartungsmodus U034 und wählen Sie [Center Line] > [Cass3] oder [Cass4].

Regolazione della linea centrale

1. Controllare lo spazio tra il centro del foglio (3) e la linea (4) dello schema di prova (d). Se lo scostamento supera il valore di riferimento, regolare lo scostamento stesso seguendo questa procedura.
<Valore di riferimento> Entro ±0,5mm.

2. Impostare la modalità manutenzione U034 e selezionare [Center Line] > [Cass3] o [Cass4].

中心线调节

1. 确认纸张的中心(3)和测试样张(d)的线(4)之间的偏移值。如果偏移值超过标准值，则按照下列步骤进行调整。
〈标准值〉 ±0.5mm 以内
2. 进入维修保养模式 U034，把[Center Line] 〉 [Cass3]或[Cass4]。

센터라인 조정

1. 용지 중앙 (3) 과 테스트 패턴 (d) 의 라인 (4) 사이의 격차를 확인하십시오 . 차이가 기준치 외의 경우 다음의 순서대로 조정을 합니다 .
＜기준치＞ ±0.5mm 이내
2. 메인터넌스 모드 U034 를 설정하고 [Center Line] > [Cass3] 또는 [Cass4] 을 선택합니다 .

センターライン調整

1. 紙のセンター(3) とテストパターン (d) の線 (4) のずれを確認する。ずれが基準値外の場合、次の手順で調整をおこなう。
＜基準値＞ ±0.5mm 以内
2. メンテナンスモード U034 をセットし、[Center Line] 〉 [Cass3] または [Cass4] を選択する。

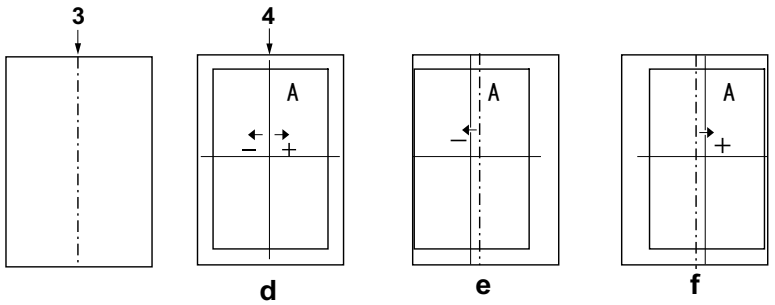

3. Adjust the values.
Test pattern (e) : Increase the setting value.
Test pattern (f) : Decrease the setting value.
Amount of change per step: 0.1mm
4. Press the [Start] key to confirm the setting value.
5. Print the test pattern.
6. Repeat the steps 2 to 5 above until the gap of line (4) in test pattern (d) is within the reference.
<Reference value> within ±0.5mm.

---

3. Régler les valeurs.
Mire d' essai (e) : Augmentez la valeur de réglage.
Mire d' essai (f) : Diminuez la valeur de réglage.
Changement par graduation d'échelle: 0,1mm
4. Appuyer sur la touche de [Départ] pour confirmer la valeur de réglage.
5. Imprimez le motif de test.
6. Répéter les étapes 2 à 5 ci-dessus jusqu'à ce que l'espace de la ligne (4) dans le motif de test (d) soit dans la référence.
<Valeur de référence> ±0,5mm max.

---

3. Ajuste los valores.
Patrón de prueba (e) : Aumente el valor de configuración.
Patrón de prueba (f) : Reduzca el valor de configuración.
Magnitud del cambio por incremento: 0,1mm
4. Pulse la tecla de [Inicio] para confirmar el valor de configuración.
5. Imprima el patrón de prueba.
6. Repita los pasos del 2 al 5 anteriores hasta que el espacio de línea (4) del patrón de prueba (d) esté dentro de los valores de referencia.
<Valor de referencia> dentro de ±0,5mm.

---

3. Die Werte einstellen.
Testmuster (e) : Den Einstellwert erhöhen.
Testmuster (f) : Den Einstellwert verringern.
Änderung pro Schritt: 0,1mm
4. Den Einstellwert durch Drücken der [Start]-Taste bestätigen.
5. Drucken Sie die Testseite aus.
6. Wiederholen Sie die Schritte 2 bis 5 solange, bis der Abstand der Linie (4) auf der Testseite (d) sich innerhalb der Referenz befindet.
<Bezugswert> Innerhalb ±0,5mm.

---

3. Regolare i valori.
Modello di prova (e) : Aumentare il valore dell'impostazione.
Modello di prova (f) : Diminuire il valore dell'impostazione.
Entità modifica per passo: 0,1mm
4. Premere il tasto di [Avvio] per confermare il valore dell'impostazione.
5. Stampare lo schema di prova.
6. Ripetere i punti da 2 a 5 sopra indicati fino a portare lo spazio della linea (4) nello schema di prova (d) all'interno del riferimento.
<Valore di riferimento> entro ±0,5mm

---

3. 调整设定值。
测试图案 (e) ：调高设定值。
测试图案 (f) ：调低设定值。
设定值的一个调整单位变化量 ：0.1㎜
4. 按 [开始] 键，以确定设定值。
5. 打印测试图案。
6. 重复步骤 2 ～ 5，直至测试样张 (d) 的线 (4) 的偏移值达到标准值以内。
〈标准值〉±0.5㎜ 以内

---

3. 설정치를 조정합니다 .
테트스 패턴 (e):설정치를 높입니다 .
테트스 패턴 (f):설정치를 내립니다 .
1 스텝당 변화량:0.1mm
4. [복사 / 시작] 키를 누르고 설정치를 확인합니다 .
5. 시험 패턴을 인쇄합니다 .
6. 테스트 패턴 (d) 에서 라인 (4) 의 격차가 기준 이내가 될 때까지 2 단계 ～ 5 단계를 반복 수행합니다 .
＜기준치＞ ±0.5mm 이내

---

3. 設定値を調整する。
テストパターン (e) ：設定値を上げる。
テストパターン (f) ：設定値を下げる。
1 ステップ当たりの変化量:0.1㎜
4. [スタート] キーを押し、設定値を確定する。
5. テストパターンを出力する。
6. テストパターン (d) の線 (4) のずれが基準値内になるまで手順 2 ～ 5 を繰り返す。
〈基準値〉±0.5㎜ 以内



2020. 2
303V55671001

PH-7A/PH-7B/PH-7C/PH-7D

FOR DF-770/DF-790/DF-791 /DF-7110/DF-7120/DF-7140

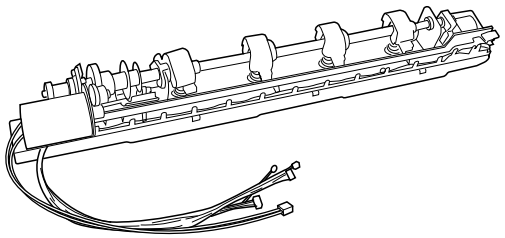

INSTALLATION GUIDE

GUIDE D'INSTALLATION

GUÍA DE INSTALACION

INSTALLATIONSANLEITUNG

GUIDA ALL'INSTALLAZIONE

安装手册

설치안내서

設置手順書

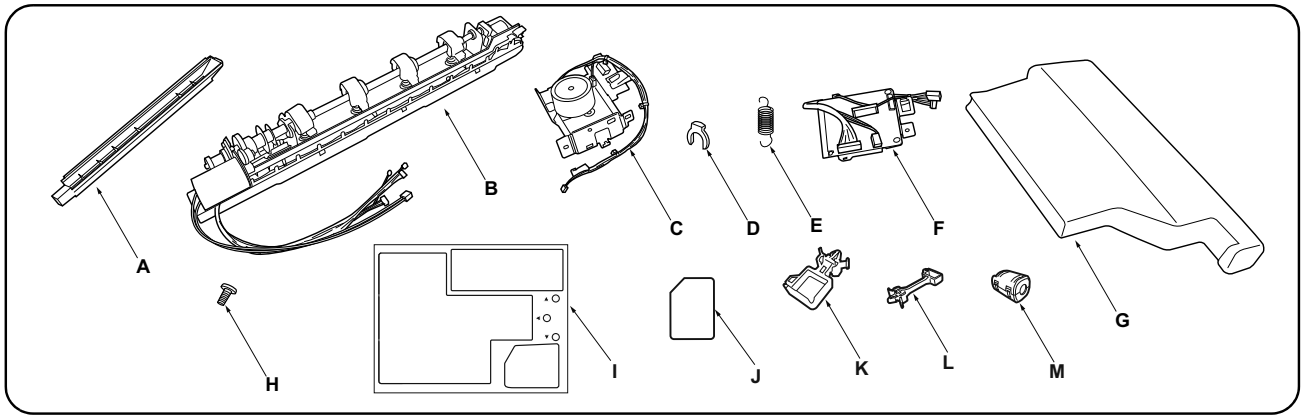

(EN)

Supplied parts

A. Punch guide 1
B. Hole punch unit 1
C. Motor unit 1
D. Stop ring 1
E. Spring 1
F. Punch PWB 1
G. Waste hole punch box 1
H. M3 × 8 tap Tight S screw 3
I. Label sheet 1
J. Film (for DF-770/DF-790/DF-791)*1 1
K. Small clamp (for DF-770/DF-7120) 1
L. Large clamp (for DF-790/DF-791/DF-7110/DF-7140) 1
M. Ferrite core 1

Be sure to remove any tape and/or cushioning material from supplied parts.
*1:DF-7110/DF-7120/DF-7140:(J) is not used.

(FR)

Pièces fournies

A. Guide de perforatrice 1
B. Perforatrice 1
C. Moteur 1
D. Bague d'arrêt 1
E. Ressort 1
F. PWB de la perforatrice 1
G. Bac de récupération de la perforatrice 1
H. Vis S taraudée M3 × 8 3
I. Feuillet d'étiquettes 1
J. Film (pour DF-770/DF-790/DF-791)*1 1
K. Petit collier (pour DF-770/DF-7120) 1
L. Grand collier (pour DF-790/DF-791/DF-7110/DF-7140) .. 1
M. Noyau de ferrite 1

Veillez à retirer les morceaux de bande adhésive et/ou les matériaux de rembourrage des pièces fournies.
*1:DF-7110/DF-7120/DF-7140:(J) n'est pas utilisé.

(ES)

Partes suministradas

A. Guía de perforación 1
B. Perforadora 1
C. Unidad motriz 1
D. Anillo de tope 1
E. Resorte 1
F. PWB de perforación 1
G. Caja para desechos de la perforación 1
H. Tornillo de ajuste M3 × 8 3
I. Hoja con etiqueta 1
J. Película (para DF-770/DF-790/DF-791)*1 1
K. Sujetador pequeño (para DF-770/DF-7120) .. 1
L. Sujetador grande (para DF-790/DF-791/DF-7110/DF-7140) .. 1
M. Núcleo de ferrita 1

Asegúrese de despegar todas las cintas y/o material amortiguador de las partes suministradas.
*1:DF-7110/DF-7120/DF-7140:(J) no se utiliza.

(DE)

Gelieferte Teile

A. Locherführung 1
B. Lochereinheit 1
C. Motoreinheit 1
D. Anschlagring 1
E. Feder 1
F. Locher-PWB 1
G. Lochungsabfallbehälter 1
H. M3 × 8 Passstift-Verbundschrauben 3
I. Aufkleberbogen 1
J. Film(für DF-770/DF-790/DF-791)*1 1
K. Kleine Klemme (für DF-770/DF-7120) 1
L. Große Klemme (für DF-790/DF-791/DF-7110/DF-7140) 1
M. Ferritkern 1

Entfernen Sie Klebeband und/oder Dämpfungsmaterial vollständig von den mitgelieferten Teilen.
*1:DF-7110/DF-7120/DF-7140:(J) wird nicht benötigt.

(IT)

Parti di fornitura

A. Guida perforazione 1
B. Unità di perforazione 1
C. Unità motore 1
D. Anello di bloccaggio 1
E. Molla 1
F. Scheda a circuiti stampati di perforazione 1
G. Scarto perforazione 1
H. Viti con testa a croce S M3 × 8 3
I. Foglio di etichette 1
J. Pellicola(per DF-770/DF-790/DF-791)*1 1
K. Morsetto piccolo (per DF-770/DF-7120) 1
L. Morsetto grande (per DF-790/DF-791/DF-7110/DF-7140) 1
M. Nucleo di ferrite 1

Accertarsi di rimuovere tutti i nastri adesivi e/o il materiale di imbottitura dalle parti fornite.
*1:DF-7110/DF-7120/DF-7140:(J)non è utilizzato.

(ZHCN)

附属品

A. 打孔导向板 1
B. 打孔单元 1
C. 电机单元 1
D. 止动环 1
E. 弹簧 1
F. 打孔单元电路板 1
G. 打孔纸屑盒 1
H. M3 X 8 攻丝紧固型 S 螺丝 3
I. 标签纸 1
J. 胶片（DF-770/DF-790/DF-791 用）*1 1
K. 固定夹 小（DF-770/DF-7120 用） 1
L. 固定夹 大（DF-790/DF-791/DF-7110/DF-7140 用） 1
M. 磁环 1

如果附属品上带有固定胶带，缓冲材料时务必揭下。
*1:DF-7110/DF-7120/DF-7140: 不使用 (J)。

(KO)

동봉품

A. 펀치가이드 1
B. 펀치유니트 1
C. 모터유니트 1
D. 스톱링 1
E. 스프링 1
F. 펀치기판 1
G. 펀치폐기박스 1
H. 나사 M3×8 탭타이트 S 3
I. 라벨 시트 1
J. 필름 (DF-770/DF-790/DF-791 용) *1 1
K. 클램프 소 (DF-770/DF-7120 용) 1
L. 클램프 대 (DF-790/DF-791/DF-7110/DF-7140 용) 1
M. 페라이트 코어 1

동봉품에 고정 테이프 , 완충재가 붙어 있는 경우에는 반드시 제거할 것 .
*1:DF-7110/DF-7120/DF-7140:(J) 는 사용되지 않습니다 .

(JA)

同梱品

A. パンチガイド 1
B. パンチユニット 1
C. モーターユニット 1
D. ストップリング 1
E. バネ 1
F. パンチ基板 1
G. パンチくずボックス 1
H. ビス M3×8 タップタイト S 3
I. ラベルシート 1
J. フィルム(DF-770/DF-790/DF-791 用)*1 ... 1
K. クランプ小(DF-770/DF-7120 用) 1
L. クランプ大(DF-790/DF-791/DF-7110/DF-7140 用) 1
M. フェライトコア 1

同梱品に固定テープ、緩衝材が付いている場合は必ず取り外すこと。
*1:DF-7110/DF-7120/DF-7140:(J) は使用しない。

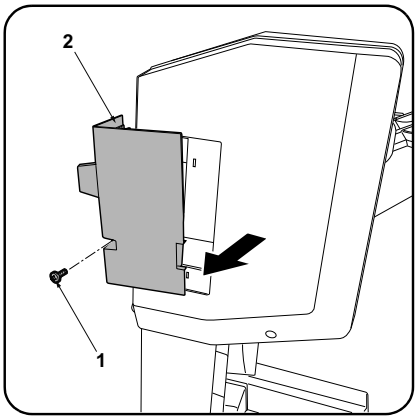

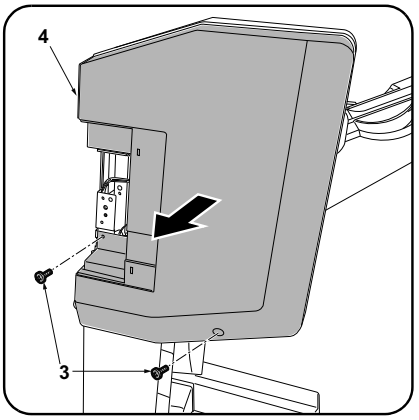

Procedure
Before installing the hole punch unit, make sure the MFP's main power switch is turned off and that its power cord is unplugged from the power outlet.
Install the document finisher first and then install the hole punch unit.

Removing the cover (DF-770/DF-7120)
If installing on the DF-790/DF-791/DF-7110/DF-7140, proceed to step 1 on page 3.
1. Remove the screw (1) and remove the small rear cover (2).

2. Remove the 2 screws (3) and remove the upper rear cover (4).

Procédure
Avant d'installer la perforatrice, s'assurer que l'interrupteur d'alimentation principal du MFP est hors tension et que le câble d'alimentation est débranché de la prise secteur.
Installer d'abord le finisseur de document, puis installer la perforatrice.

Dépose du couvercle (DF-770/DF-7120)
Pour l'installation sur le modèle DF-790/DF-791/DF-7110/DF-7140, passer à l'étape 1 de la page 3.
1. Déposer la vis (1) et déposer le petit couvercle arrière (2).

2. Déposer les 2 vis (3) et déposer le couvercle supérieur arrière (4).

Procedimiento
Antes de instalar la perforadora, asegúrese de que el interruptor principal de la alimentación del MFP esté desconectado y de que el cable de alimentación esté desenchufado de la toma de corriente de la pared.
Instale primero el finalizador de documentos y luego instale la perforadora.

Extracción de la cubierta (DF-770/DF-7120)
Si realiza la instalación en el DF-790/DF-791/DF-7110/DF-7140, vaya al paso 1 de la página 3.
1. Quite el tornillo (1) y, después, quite la cubierta trasera pequeña (2).

2. Quite los 2 tornillos (3) y, después, quite la cubierta trasera superior (4).

Verfahren
Bevor Sie mit dem Einbau der Lochereinheit beginnen, stellen Sie sicher, dass der Hauptschalter des Kopierers ausgeschaltet und das Netzkabel aus der Steckdose gezogen ist.
Bringen Sie den Dokument-Finisher zuerst und dann erst die Lochereinheit an.

Entfernen der Abdeckung (DF-770/DF-7120)
Zur Installation des DF-790/DF-791/DF-7110/DF-7140 weitergehen zu Schritt 1 auf Seite 3.
1. Die Schraube (1) entfernen und die kleine hintere Abdeckung (2) abnehmen.

2. Die 2 Schrauben (3) entfernen und die obere hintere Abdeckung (4) abnehmen.

Procedura
Prima di installate l'unità di perforazione, assicurarsi che l'interruttore principale dell'MFP sia spento e che il cavo di alimentazione sia scollegato dalla presa di corrente.
Installare prima la finitrice e poi procedere all'installazione dell'unità di perforazione.

Rimozione del coperchio (DF-770/DF-7120)
Se si installa sull'unità DF-790/DF-791/DF-7110/DF-7140, procedere al passo 1 a pagina 3.
1. Rimuovere la vite (1) e quindi rimuovere il pannello posteriore piccolo (2).

2. Rimuovere le 2 viti (3) e quindi rimuovere il pannello superiore posteriore (4).

安装步骤
安装打孔单元时，必须事先关闭 MFP 主机的主电源开关，并拔下电源插头后再进行作业。
首先安装装订器，然后安装打孔单元。

拆下盖板（DF-770/DF-7120 时）
安装到 DF-790/DF-791/DF-7110/DF-7140 上时，跳至 P3 的步骤 1。
1. 拆除 1 颗螺丝 (1)，拆下后部小盖板 (2)。

2. 拆除 2 颗螺丝 (3)，拆下后上部盖板 (4)。

설치순서
펀치유니트를 부착할 때에는 반드시 MFP 본체의 주 전원 스위치를 OFF 로 하고 전원플러그를 뺀 다음 작업을 할 것 .
문서 피니셔를 설치 후 , 펀치유니트를 설치 할 것 .

커버제거 (DF-770/DF-7120 의 경우)
DF-790/DF-791/DF-7110/DF-7140 에 장착하는 경우에는 P3 의 순서 1 로 진행합니다 .
1. 나사 (1) 1 개를 제거하고 뒷 소커버 (2) 를 제거합니다 .

2. 나사 (3) 2 개를 제거하고 뒷 상커버 (4) 를 제거합니다 .

取付手順
パンチユニットを設置するときは、必ず MFP 本体の主電源スイッチを OFF にし、電源プラグを抜いてから作業すること。
ドキュメントフィニッシャーを設置後、パンチユニットを設置すること。

カバーの取り外し(DF-770/DF-7120 の場合)
DF-790/DF-791/DF-7110/DF-7140 に装着の場合は、P3 の手順 1 へ進む。
1. ビス (1)1 本を外し、後小カバー(2) を取り外す。

2. ビス (3)2 本を外し、後上カバー(4) を取り外す。

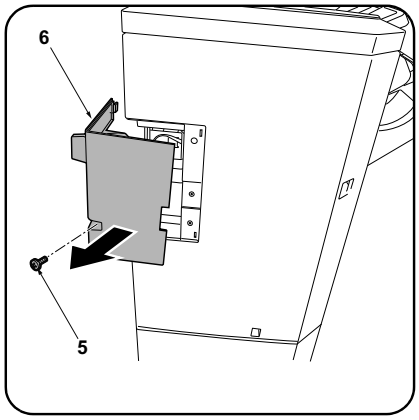

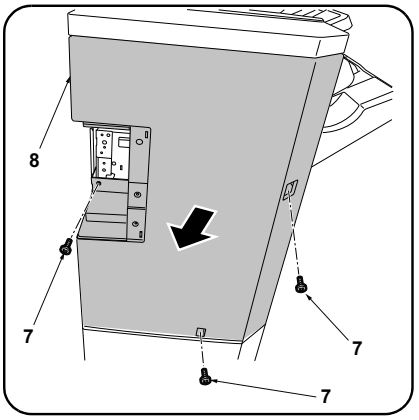

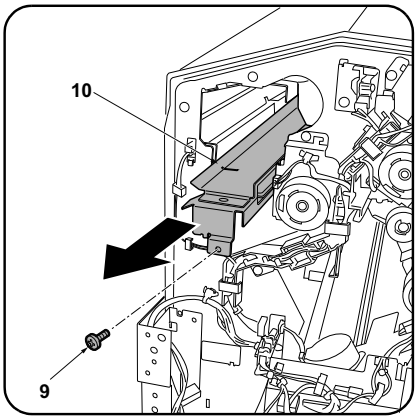

Removing the cover (DF-790/DF-791/DF-7110/DF-7140)

1. Remove the screw (5) and remove the small rear cover (6).

2. Remove the 3 screws (7) and remove the upper rear cover (8).

Installing the hole punch unit

3. Remove the screw (9) and pull the guide (10) outwards.

Dépose du couvercle (DF-790/DF-791/DF-7110/DF-7140)

1. Déposer la vis (5) et déposer le petit couvercle arrière (6).

2. Déposer les 3 vis (7) et déposer le couvercle supérieur arrière (8).

Installation de la perforatrice

3. Déposer la vis (9) et tirer le guide (10) vers l'extérieur.

Extracción de la cubierta (DF-790/DF-791/DF-7110/DF-7140)

1. Quite el tornillo (5) y, después, quite la cubierta trasera pequeña (6).

2. Quite los 3 tornillos (7) y, después, quite la cubierta trasera superior (8).

Instalación de la perforadora

3. Quite el tornillo (9) y tire de la guía (10) hacia fuera.

Entfernen der Abdeckung (DF-790/DF-791/DF-7110/DF-7140)

1. Die Schraube (5) entfernen und die kleine hintere Abdeckung (6) abnehmen.

2. Die 3 Schrauben (7) entfernen und die obere hintere Abdeckung (8) abnehmen.

Anbringen der Lochereinheit

3. Die Schraube (9) entfernen und die Führung (10) nach außen ziehen.

Rimozione del coperchio (DF-790/DF-791/DF-7110/DF-7140)

1. Rimuovere la vite (5) e quindi rimuovere il pannello posteriore piccolo (6).

2. Rimuovere le 3 viti (7) e quindi rimuovere il pannello superiore posteriore (8).

Installare l'unità di perforazione

3. Rimuovere la vite (9) ed estrarre la guida (10) verso l'esterno.

拆下盖板（DF-790/DF-791/DF-7110/DF-7140 时）

1. 拆除 1 颗螺丝（5），拆下后部小盖板（6）。

2. 拆除 3 颗螺丝（7），拆下后上部盖板（8）。

安装打孔单元

3. 拆除 1 颗螺丝（9），将导向板（10）向外拉出。

커버제거 (DF-790/DF-791/DF-7110/DF-7140 의 경우)

1. 나사 (5) 1 개를 제거하고 뒷 소커버 (6) 를 제거합니다 .

2. 나사 (7) 3 개를 제거하고 뒷 상커버 (8) 를 제거합니다 .

펀치유니트 부착

3. 나사 (9) 1 개를 제거하고 가이드 (10) 을 앞으로 끌어 당깁니다 .

カバーの取り外し(DF-790/DF-791/DF-7110/DF-7140 の場合)

1. ビス (5)1 本を外し、後小カバー(6) を取り外す。

2. ビス (7)3 本を外し、後上カバー(8) を取り外す。

パンチユニットの取り付け

3. ビス (9)1 本を外し、ガイド (10) を手前に引き出す。

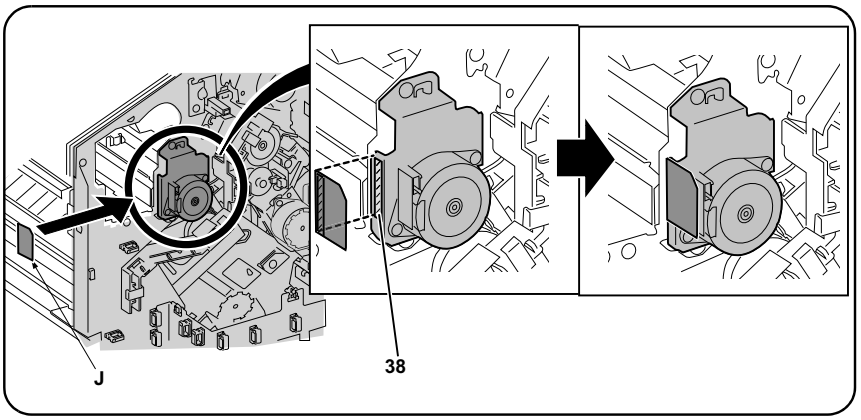

4. After using alcohol to clean the shaded portion (38) of the motor shown for adhering the film (J), adhere the film. (DF-770/DF-790/DF-791 only)

---

4. Après avoir utilisé de l'alcool pour nettoyer la partie du moteur hachurée (38) sur laquelle le film (J) est apposé, coller ce film. (DF-770/DF-790/DF-791 uniquement)

---

4. Después de utilizar alcohol para limpiar la parte sombreada (38) del motor mostrada en la ilustración para pegar la película (J), pegue la película. (DF-770/DF-790/DF-791 solamente)

---

4. Den in der Abbildung grau dargestellten Teil (38) des Motors zum Anbringen des Films (J) mit Alkohol reinigen und dann den Film anbringen. (nur DF-770/DF-790/DF-791)

---

4. Dopo aver usato l'alcool per pulire la parte ombreggiata (38) del motore, illustrata per l'adesione della pellicola (J), far aderire la pellicola. (solo DF-770/DF-790/DF-791)

---

4. 用酒精清洁电机斜侧处（38）的粘贴位置后，粘贴胶片（J）。（仅限 DF-770/DF-790/DF-791）

---

4. 모터 사선부 (38) 의 부착위치를 알코올 청소 후 , 필름 (J) 을 부착합니다 . (DF-770/DF-790/DF-791 만)

---

4. モーター斜線部(38)の貼り付け位置をアルコール清掃後、フィルム(J)を貼り付ける。(DF-770/DF-790/DF-791 のみ)

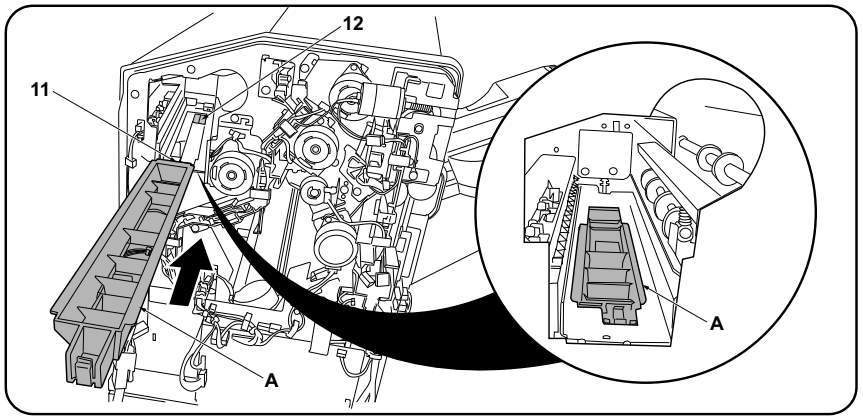

5. Install the punch guide (A) so that the leading edge of the guide (11) is below the document finisher frame (12).

---

5. Monter le guide de la perforatrice (A) de sorte que le bord d'attaque du guide (11) se trouve sous le bâti du retoucheur de document (12).

---

5. Instale la guía de perforación (A) de forma tal que el borde delantero de la guía (11) quede debajo de la carcasa del finalizador de documentos (12).

---

5. Die Locherführung (A) so einsetzen, dass die Vorderkante der Führung (11) unter dem Rahmen (12) des Dokument-Finishers liegt.

---

5. Installare la guida perforazione (A) in modo che il bordo principale della guida (11) sia sotto il telaio (12) della finitrice di documenti.

---

5. 将打孔导向板 (A) 的前端 (11) 安装在装订器的框架 (12) 的下部。

---

5. 펀치가이드 (A) 의 끝 (11) 이 문서 피니셔의 프레임 (12) 밑으로 되도록 장착합니다 .

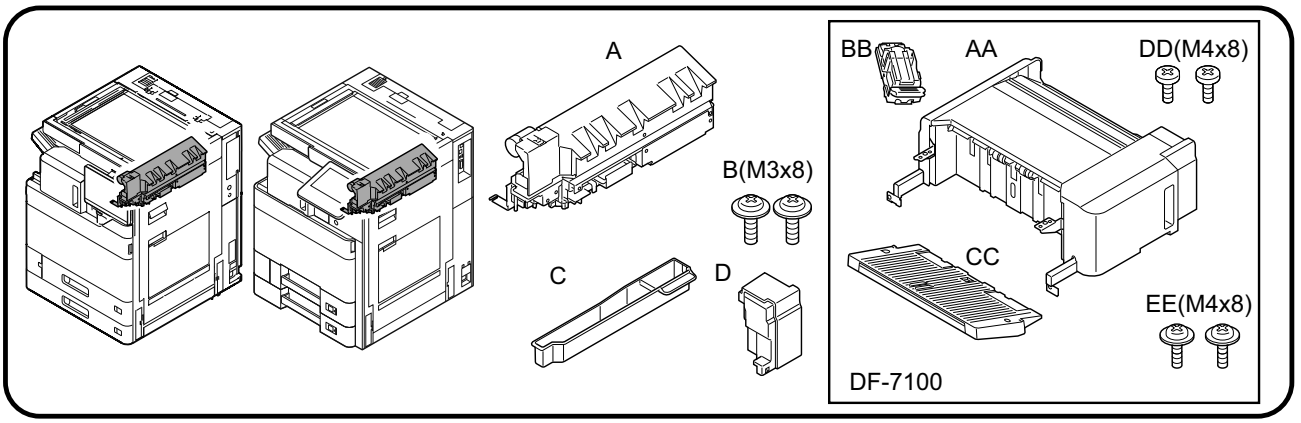

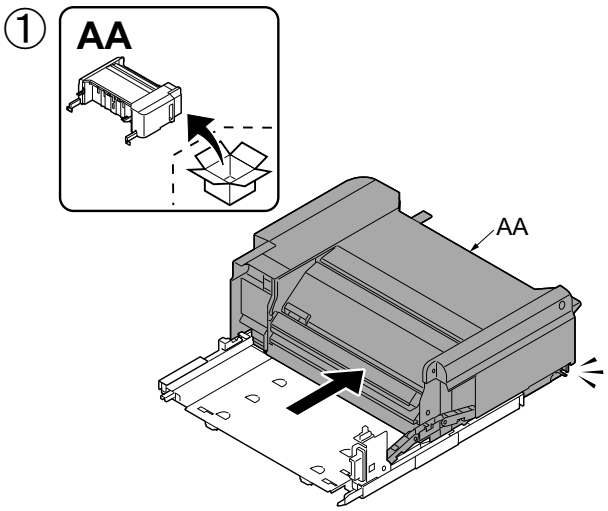

(EN) Be sure to remove any tape and/or cushioning materials from the parts supplied.

(FR) Veillez à retirer les morceaux de bande adhésive et/ou les matériaux de rembourrage des pièces fournies.

(ES) Asegúrese de quitar todas las cintas y/o material amortiguador de las partes suministradas.

(DE) Stellen Sie sicher, dass sämtliche Klebebänder und/oder Polstermaterial von den gelieferten Teilen entfernt wurden.

(IT) Rimuovere tutti i nastri adesivi e/o i materiali di protezione dalle parti fornite.

(ZHCN) 如果附属品上带有固定胶带，缓冲材料时务必揭下。

(KO) 동봉품에 고정 테이프 , 완충재가 붙어 있는 경우에는 반드시 제거하십시오.

(JA) 同梱品に固定テープ、緩衝材がついている場合は、必ず取り外すこと。

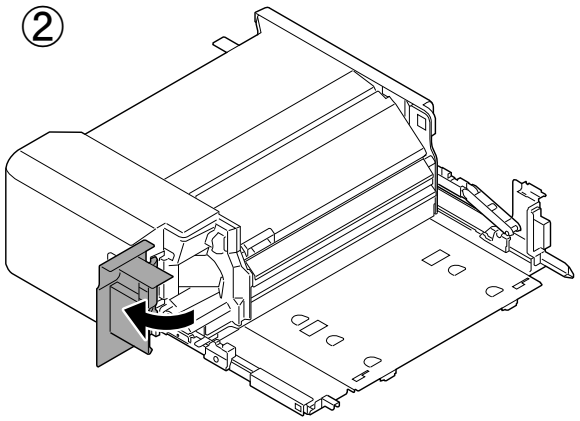

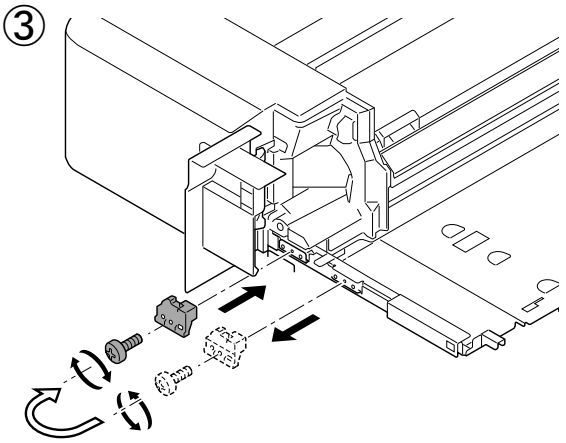

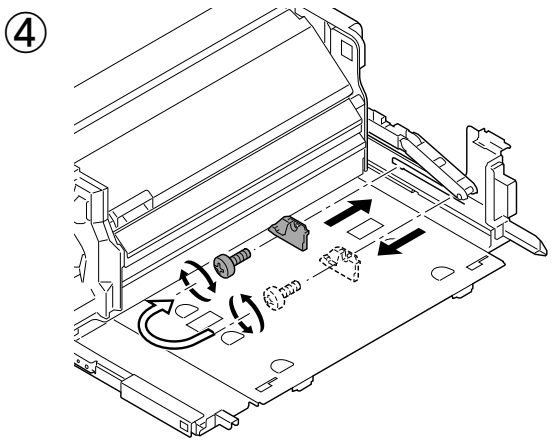

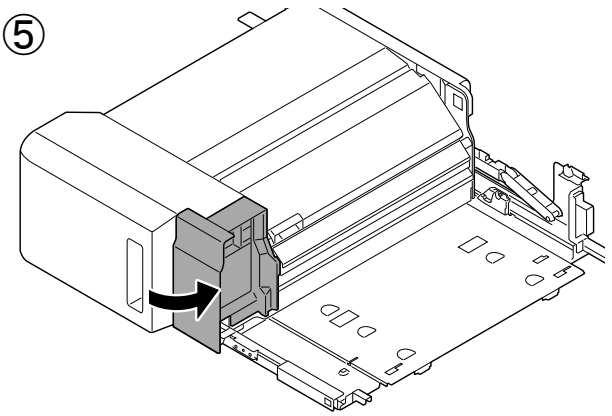

⑥

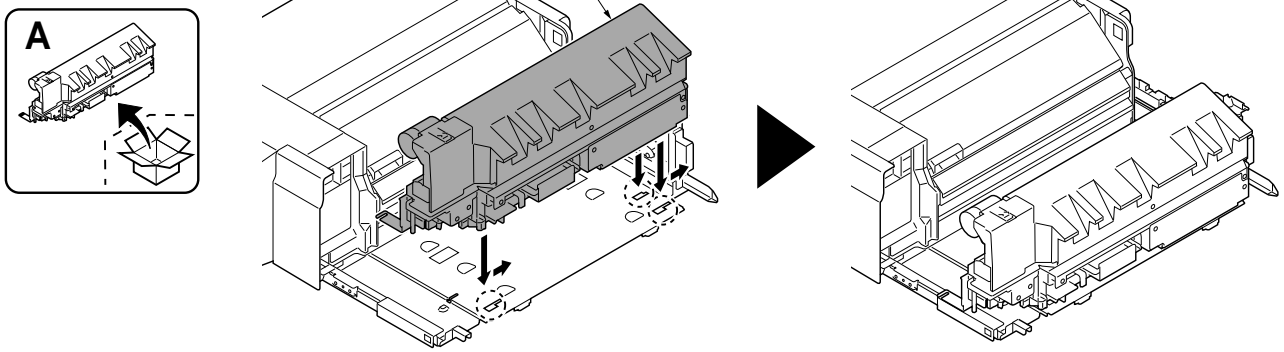

⑦

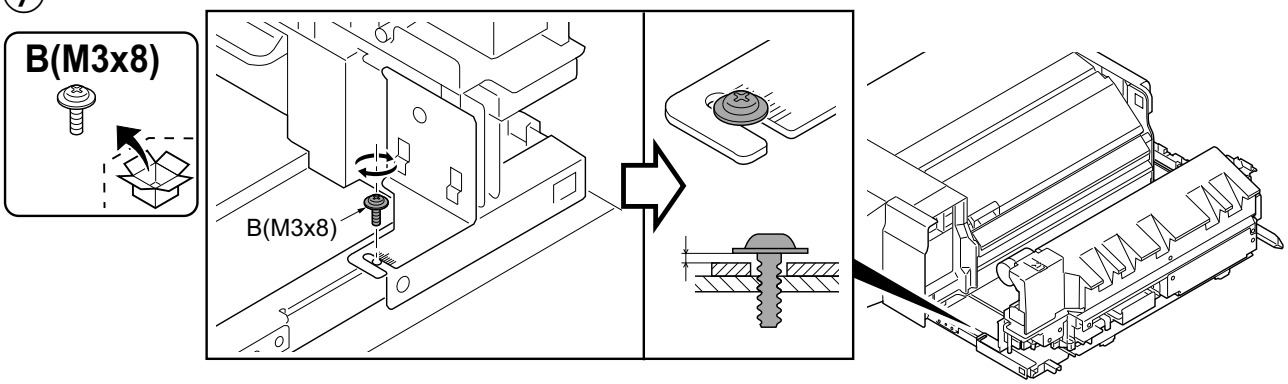

⑧

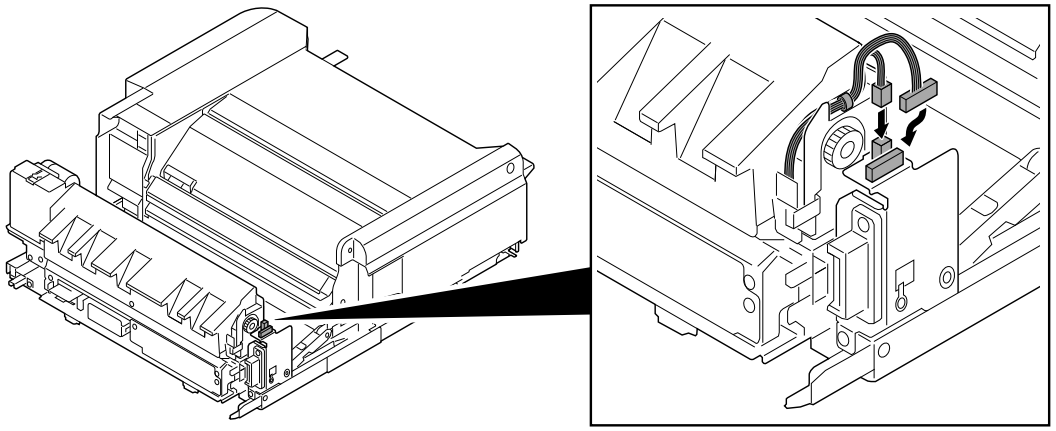

⑨

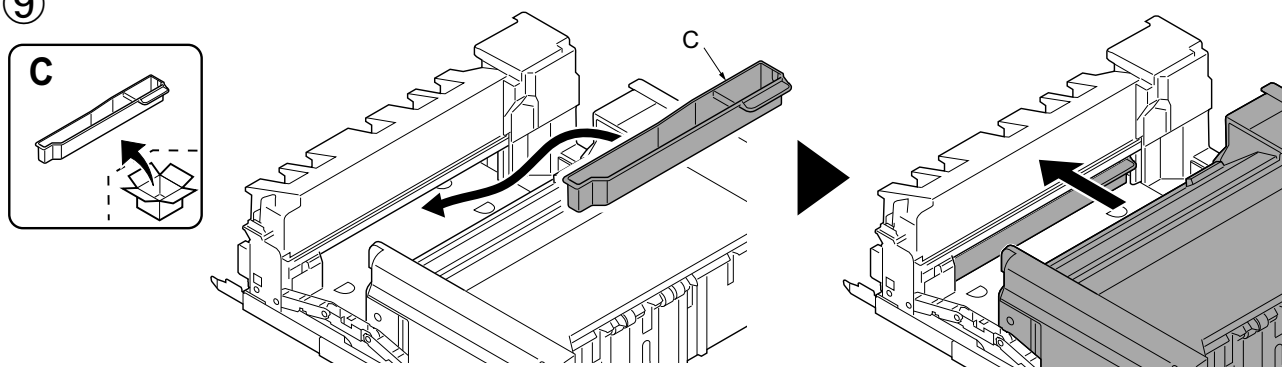

⑩

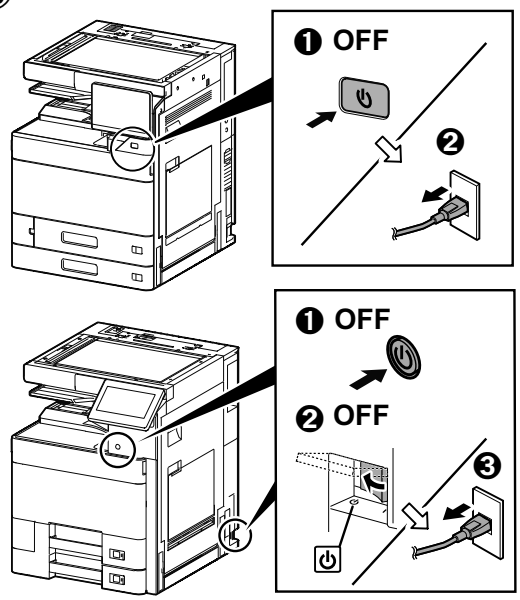

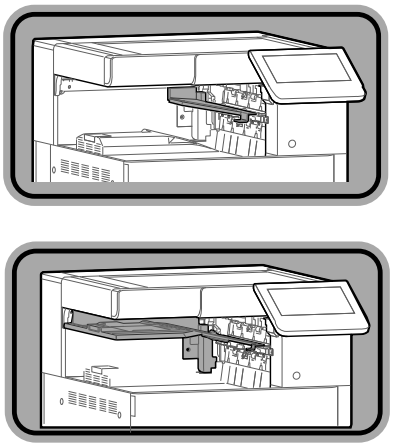

⑪-1

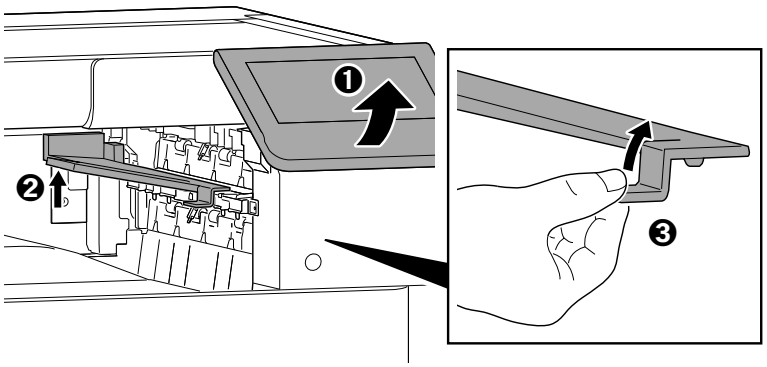

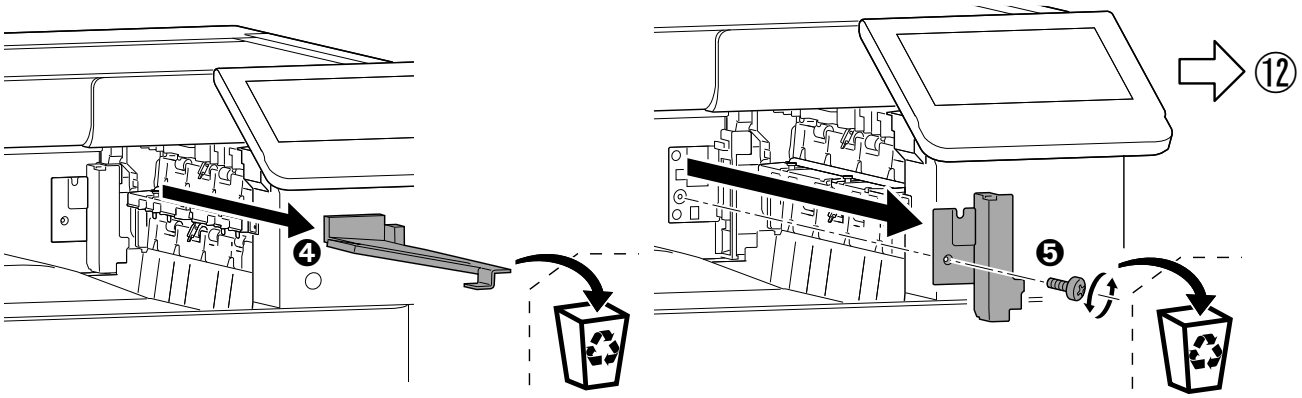

⑪-2

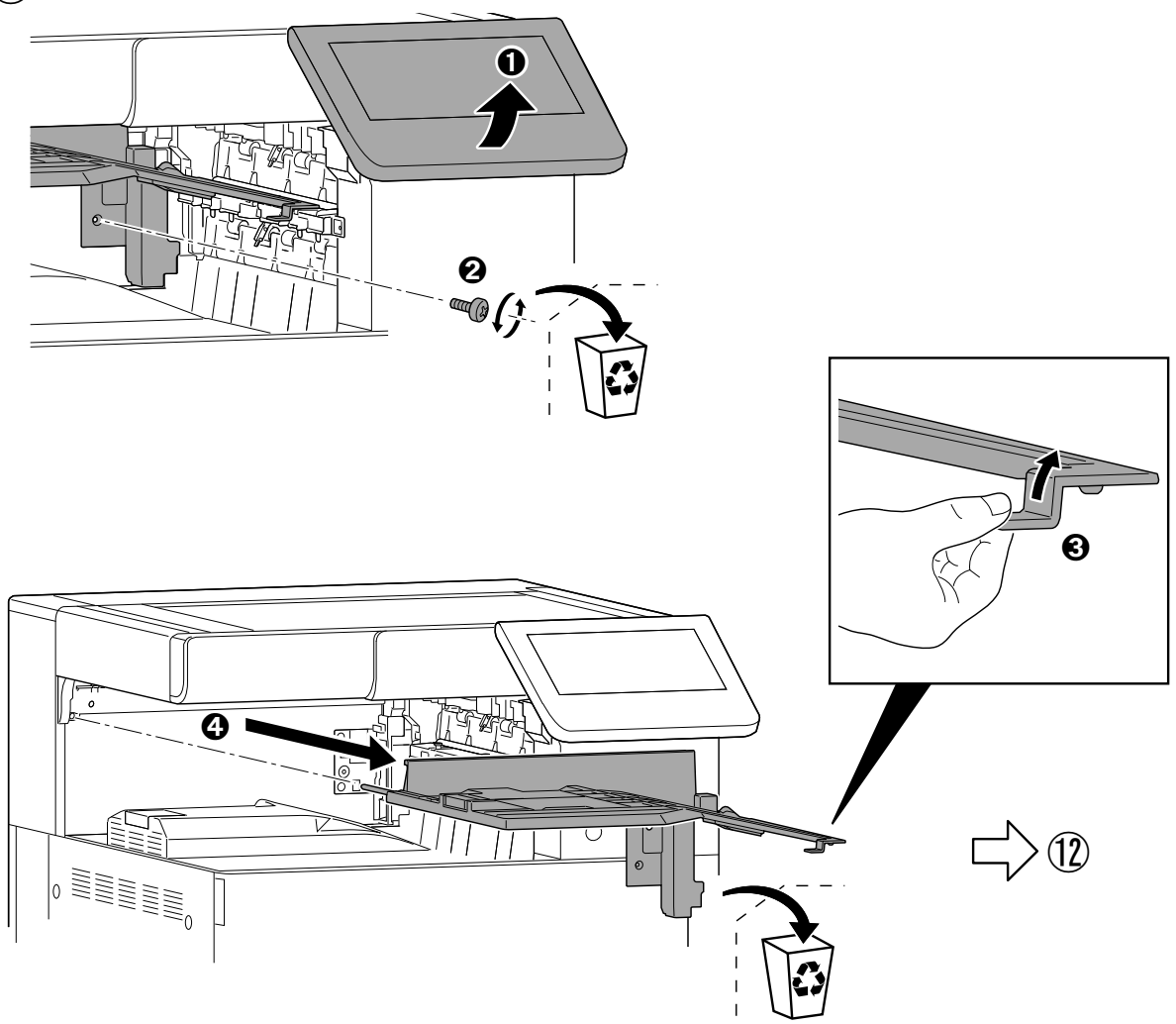

⑫

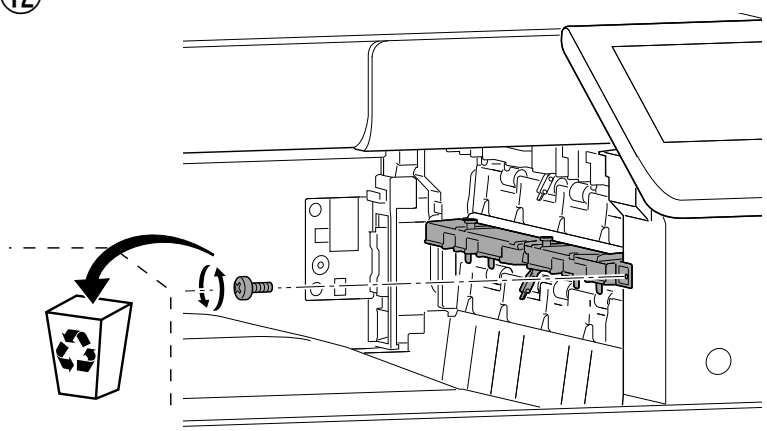

⑬

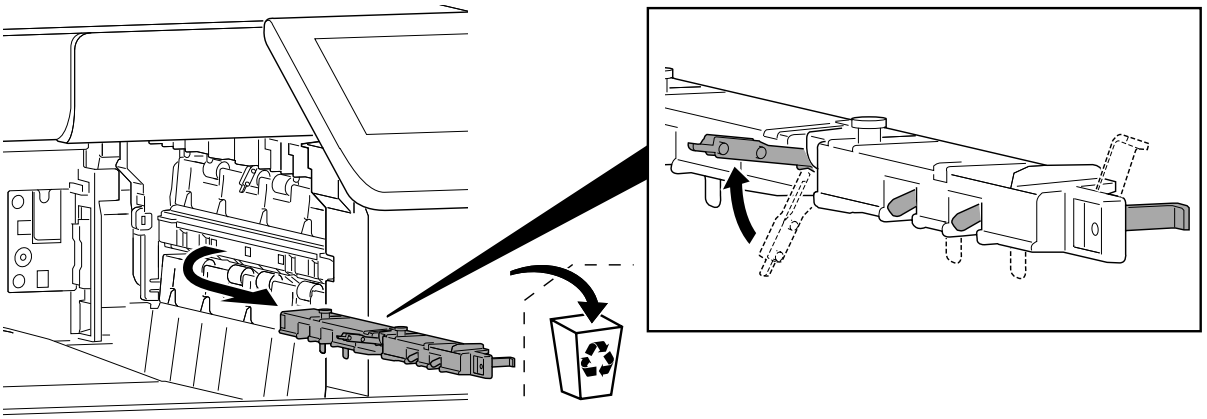

⑭

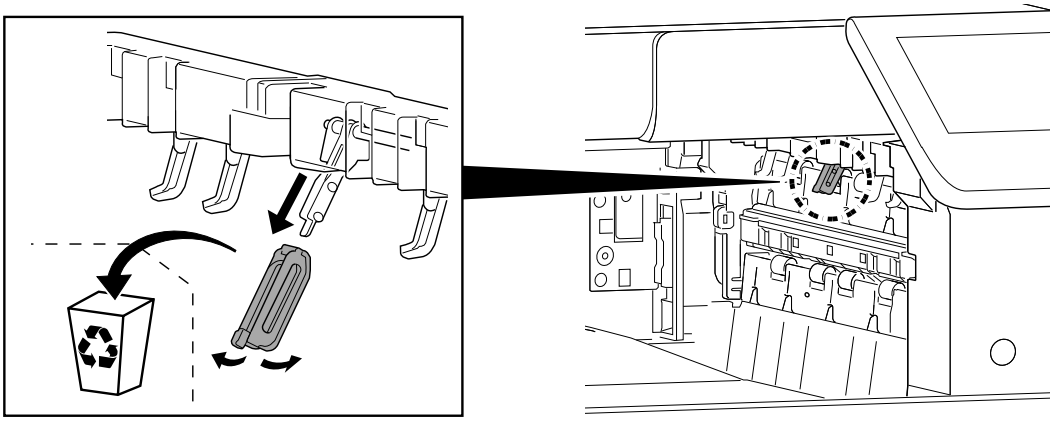

⑮

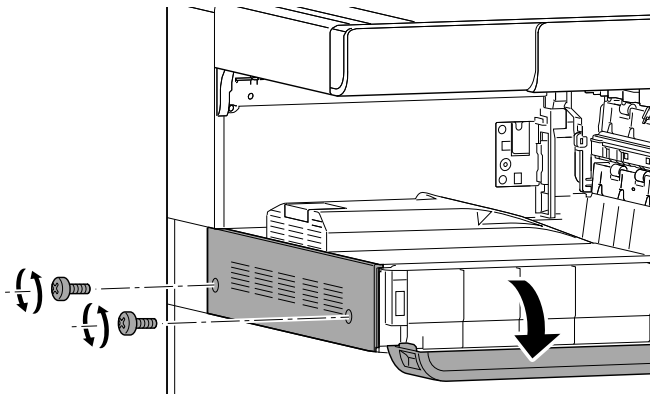

⑯

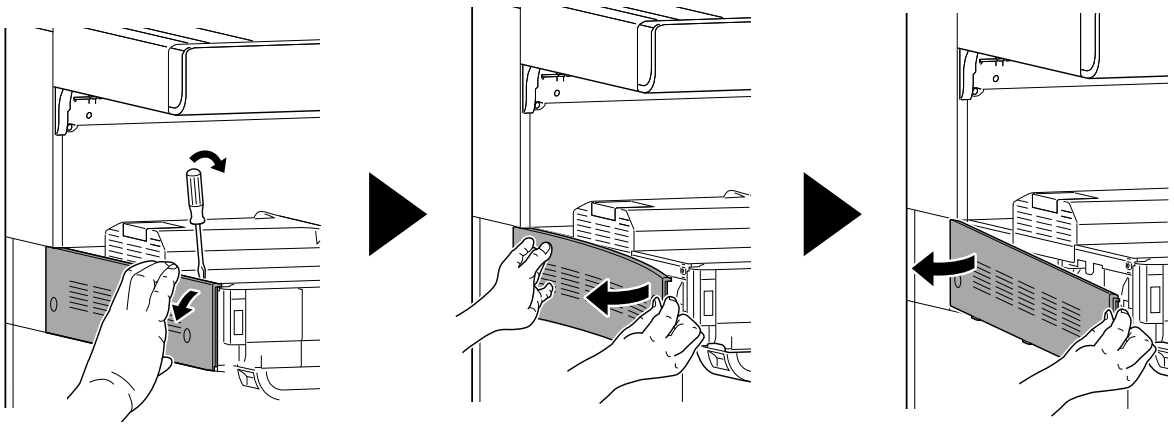

⑰

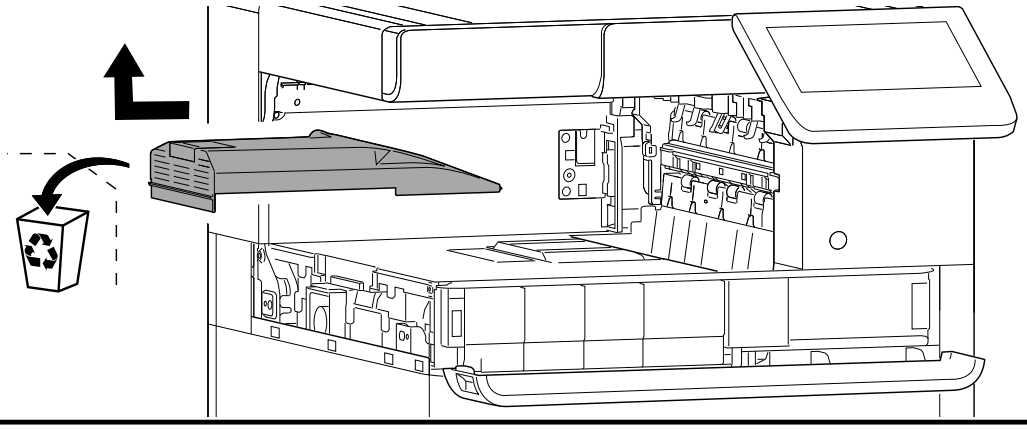

⑱

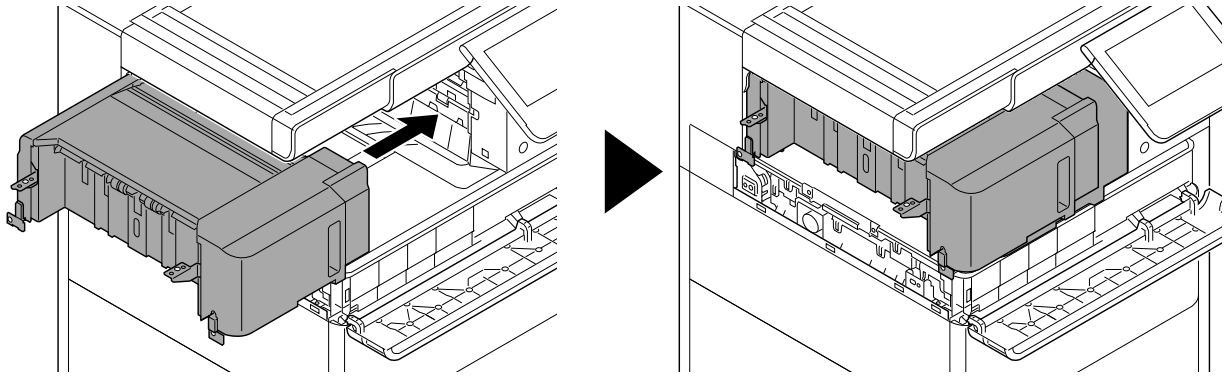

⑲

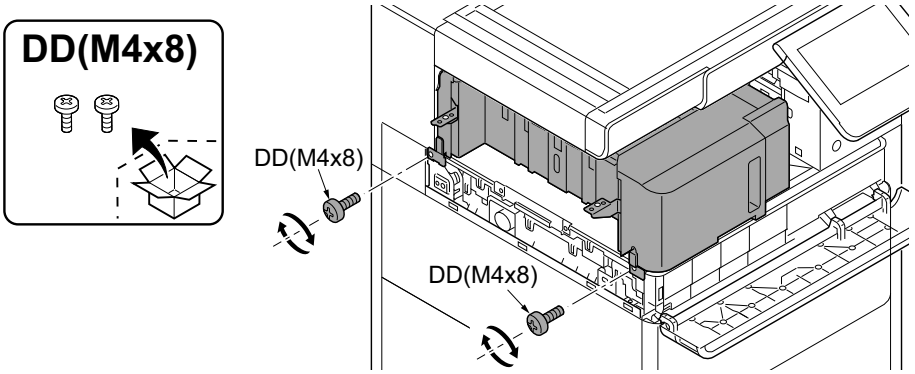

⑳

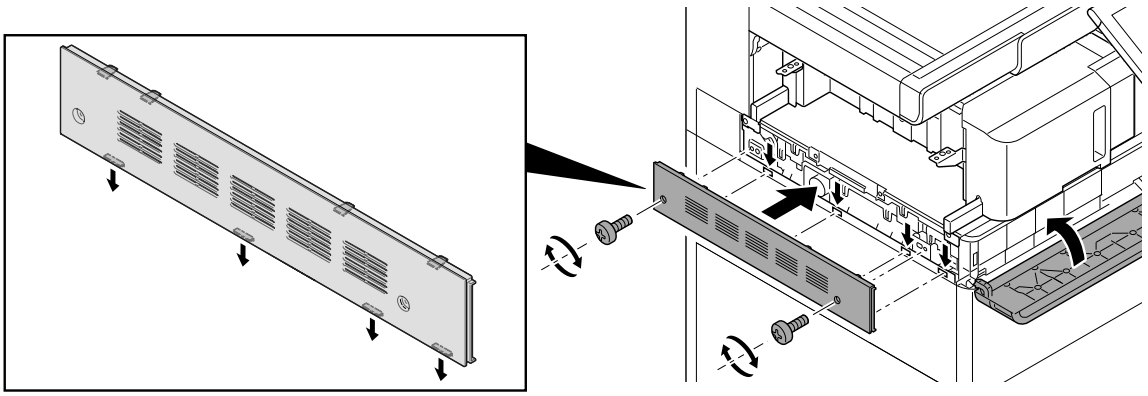

㉑

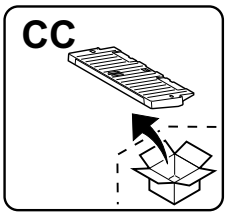

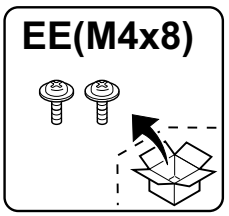

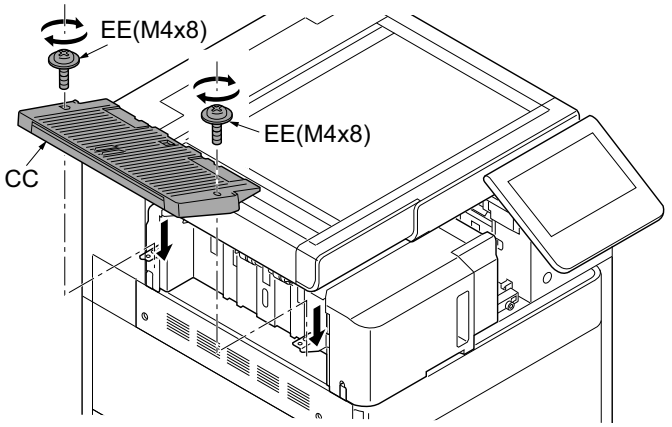

㉒

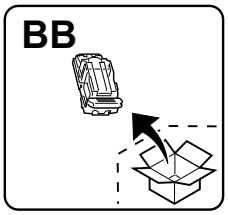

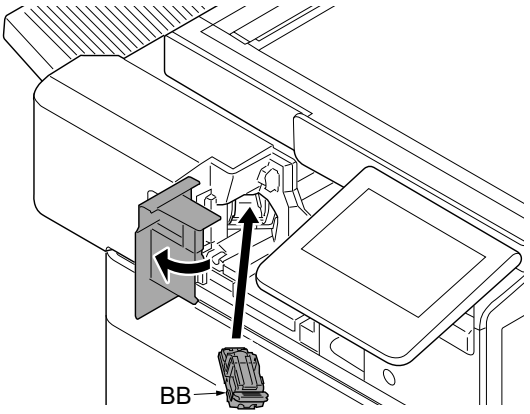

㉓

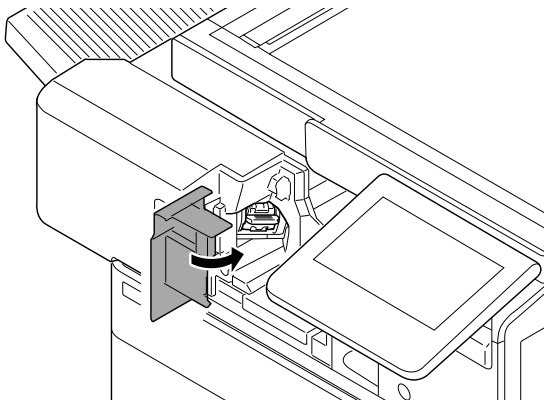

㉔

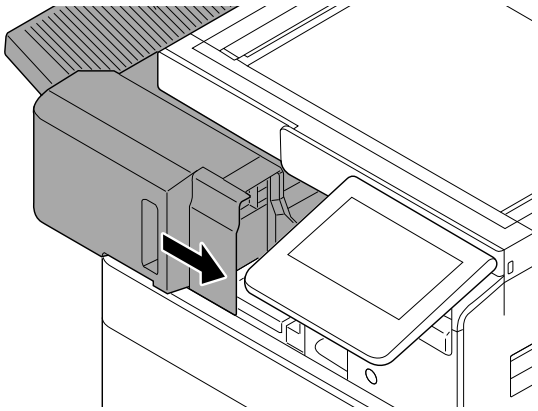

㉕

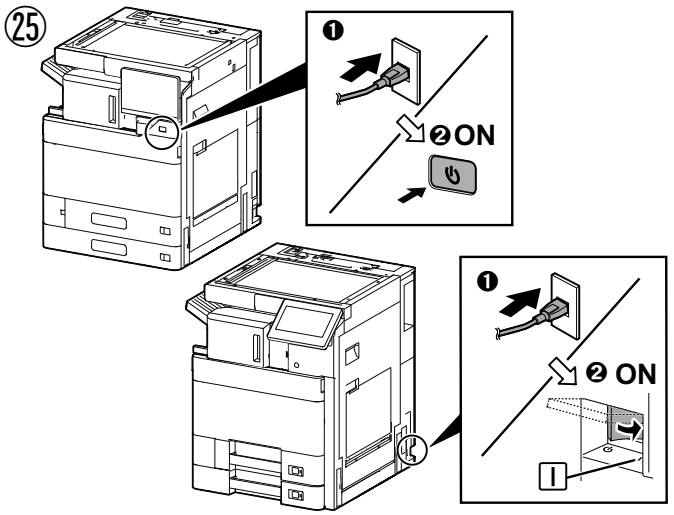

(EN) Proceed to step 1 on page 9.
(FR) Passer à l'étape 1 de la page 9.
(ES) Vaya al paso 1 de la página 9.
(DE) Weitergehen zu Schritt 1 auf Seite 9.
(IT) Procedere al passo 1 a pagina 9.
(ZHCN) 跳至 P9 的步骤 1。
(KO) P9 의 순서 1 로 진행 .
(JA) P9 の手順 1へ進む。

㉖

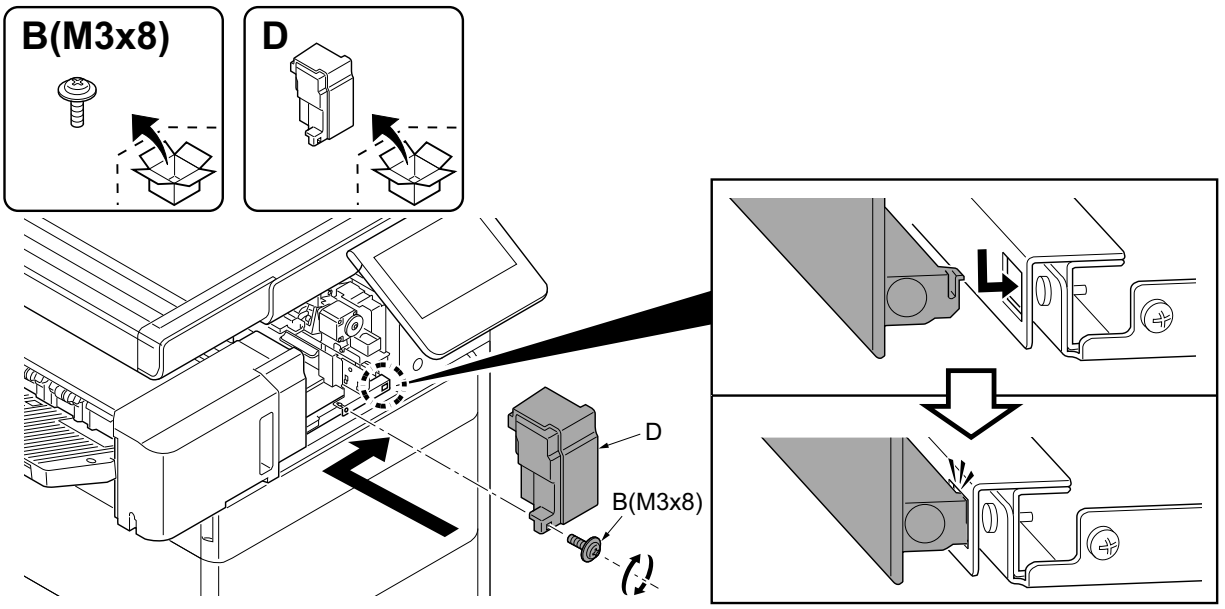

㉗

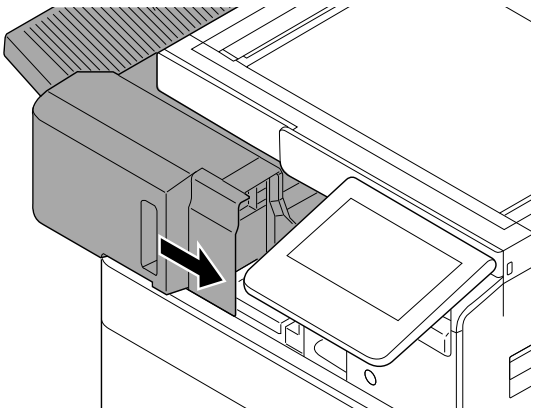

(EN)

[Adjusting the hole punch position]

1. Make a test copy in punch mode.

2. If any off-centering is observed, follow the procedure below to adjust the hole position.
(For the referrence value, refer to each adjustment content.)

(FR)

[Réglage de la position des perforations]

1. IEffectuer une copie d'essai en mode perforation.

2. Si les perforations sont décentrées, suivre la procédure ci-dessous pour ajuster la position de perforation.
(Pour la valeur de référence, se reporter à chaque contenu d'ajustement.)

(ES)

[Ajuste de la posición de perforación]

1. Haga una copia de prueba en el modo de perforación.

2. Si observa descentrado, siga el procedimiento de abajo para ajustar la posición del agujero.
(Para información sobre el valor de referencia, consulte el contenido de cada ajuste.)

(DE)

[Einstellen der Lochungsposition]

1. Eine Testkopie im Lochungsmodus erstellen.

2. Falls eine außermittige Lochung erfolgte, ist die Lochungsposition wie folgend nachzustellen.
(Den Referenzwert finden Sie im jeweiligen Einstellungsabschnitt.)

(IT)

[Regolazione di posizione dei fori di perforazione]

1. Eseguire una copia di prova in modalità di perforazione.

2. Nel caso in cui non lo siano, eseguire la procedura indicata qui di seguito per regolarne la posizione.
(Per informazioni sul valore di riferimento vedere il contenuto di ogni regolazione.)

(ZHCN)

[打孔位置的调节]

1. 在打孔模式下进行测试复印。
2. 打孔位置有偏差时，按以下步骤进行调节。
（标准值请参照各调整内容。）

(KO)

[펀치위치의 조정]

1. 펀치모드에서 시험복사를 합니다 .
2. 펀치위치가 벗어난 경우에는 다음 순서로 조정합니다 .
(기준 값에 대해서는 각 조정 내용을 참조하십시오 .)

(JA)

[パンチ位置の調整]

1. パンチモードでテストコピーを行う。
2. パンチ位置がずれていた場合、次の手順で調整を行う。
（基準値は、各調整内容を参照のこと。）

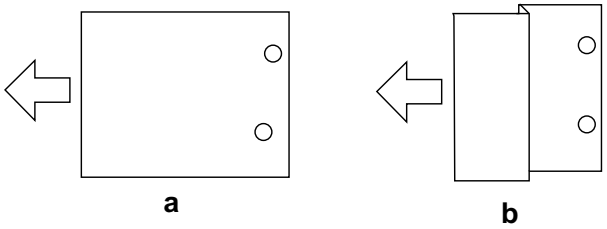

Adjusting the hole punch entry registration

1. Set the maintenance mode U246 and select [Finisher] > [Punch Regist].
2. Adjust the values.
When the paper fed in skewed copy example (a): Increase the setting value.
When the paper crimped copy example (b): Decrease the setting value.
Amount of change per step: 0.25mm
3. Press the [Start] key to confirm the setting value.

Réglage de l'enregistrement de l'entrée des perforations

1. Passer en mode maintenance U246, sélectionner [Finisher] > [Punch Regist].
2. Régler les valeurs.
Si le papier est alimenté de travers exemple de copie (a): Augmentez la valeur de réglage.
Si le papier est froissé exemple de copie (b): Diminuez la valeur de réglage.
Changement par graduation d'échelle: 0,25mm
3. Appuyer sur la touche de [Départ] pour confirmer la valeur de réglage.

Ajuste del registro de entrada de perforación

1. Configure el modo de mantenimiento U246 y seleccione [Finisher] > [Punch Regist].
2. Ajuste los valores.
Cuando el papel alimentado está torcido copia de muestra (a): Aumente el valor de configuración.
Cuando el papel se dobló copia de muestra (b): Reduzca el valor de configuración.
Magnitud del cambio por incremento: 0,25mm
3. Pulse la tecla de [Inicio] para confirmar el valor de configuración.

Einstellen der Lochungsregistrierung

1. Aktivieren Sie den Wartungsmodus U246 und wählen Sie [Finisher] > [Punch Regist].
2. Die Werte einstellen.
Wenn Papier verkantet eingezogen wird Kopiebeispiel (a): Den Einstellwert erhöhen.
Wenn Papier verknittert wird Kopiebeispiel (b): Den Einstellwert verringern.
Änderung pro Schritt: 0,25mm
3. Den Einstellwert durch Drücken der [Start]-Taste bestätigen.

Regolazione del registro del foro di perforazione

1. Impostare la modalità manutenzione U246 e selezionare [Finisher] > [Punch Regist].
2. Regolare i valori.
Quando l'alimentazione della carta risulta obliqua esempio di copia (a): Aumentare il valore dell'impostazione.
Quando la carta risulta increspata esempio di copia (b): Diminuire il valore dell'impostazione.
Entità modifica per passo: 0,25mm
3. Premere il tasto di [Avvio] per confermare il valore dell'impostazione.

打孔装入定位调节

1. 进入维修保养模式 U246，把 [Finisher] > [Punch Regist]。
2. 调整设定值。
纸张斜向搬运时的复印样本 (a)：调高设定值。
纸张作 Z 字折时的复印样本 (b)：调低设定值。
设定值的一个调整单位变化量：0.25mm
3. 按 [开始] 键，以确定设定值。

펀치반입 레지스트 조정

1. 메인터넌스 모드 U246 를 설정하고 [Finisher] > [Punch Regist] 를 선택합니다 .
2. 설정치를 조정합니다 .
용지가 기울어져서 반송되는 경우의 복사샘플 (a):설정치를 높입니다 .
용지가 Z 꺾임이 있는 경우 복사샘플 (b):설정치를 내립니다 .
1 스텝당 변화량:0.25mm
3. [복사 / 시작] 키를 누르고 설정치를 확인합니다 .

パンチ搬入レジスト調整

1. メンテナンスモード U246 をセットし、[Finisher] > [Punch Regist] を選択する。
2. 設定値を調整する。
用紙が斜めに搬送される場合コピーサンプル (a):設定値を上げる。
用紙が Z 折れする場合コピーサンプル (b):設定値を下げる。
1 ステップ当たりの変化量:0.25mm
3. [スタート] キーを押し、設定値を確定する。

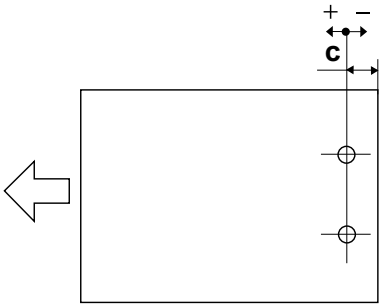

Adjusting the hole punch position feed

1. Set the maintenance mode U246 and select [Finisher] > [Punch Feed].
2. Adjust the values.
If the punch hole position is closer to the edge than the reference value (c): Increase the setting value.
If the punch hole position is further from the edge than the reference value (c): Decrease the setting value.
Amount of change per step: 0.5mm
3. Press the [Start] key to confirm the setting value.
4. Perform a test copy.
5. Repeat the steps 1 to 4 until the hole punch position is within the reference.
<Reference value (c)>
Metric specification: 13.0mm ±2mm
Inch specification: 9.5mm ±2mm (0.37" ± 0.08")

Réglage de la position du point de perforation

1. Passer en mode maintenance U246, sélectionner [Finisher] > [Punch Feed].
2. Régler les valeurs.
Si la perforation est plus proche du bord de la feuille que défini par la valeur de référence (c): Augmentez la valeur de réglage.
Si la perforation est plus loin du bord de la feuille que défini par la valeur de référence (c): Diminuez la valeur de réglage.
Changement par graduation d'échelle: 0,5mm
3. Appuyer sur la touche de [Départ] pour confirmer la valeur de réglage.
4. Effectuer une copie de test.
5. Répéter les étapes 1 à 4 jusqu'à ce que la position de perforation soit dans la référence.
<Valeur de référence (c)>
Spécifications métriques: 13,0mm ±2mm
Spécifications en pouces: 9,5mm ±2mm (0,37" ± 0,08")

Ajuste de la alimentación de la posición de perforación

1. Configure el modo de mantenimiento U246 y seleccione [Finisher] > [Punch Feed].
2. Ajuste los valores.
Si la posición de perforación está más cerca del borde que el valor de referencia (c): Aumente el valor de configuración.
Si la posición de perforación está más alejada del borde que el valor de referencia (c): Reduzca el valor de configuración.
Magnitud del cambio por incremento: 0,5mm
3. Pulse la tecla de [Inicio] para confirmar el valor de configuración.
4. Haga una copia de prueba.
5. Repita los pasos del 1 al 4 hasta que la posición de perforación de los agujeros esté dentro de los valores de referencia.
<Valor de referencia (c)>
Sistema métrico: 13,0mm ±2mm
En pulgadas: 9,5mm ±2mm (0,37" ± 0,08")

Einstellen des Transports der Lochungsposition

1. Aktivieren Sie den Wartungsmodus U246 und wählen Sie [Finisher] > [Punch Feed].
2. Die Werte einstellen.
Falls die Lochungsposition näher an der Kante liegt als der Bezugswert (c) erlaubt: Den Einstellwert erhöhen.
Falls die Lochungsposition ferner von der Kante liegt als der Bezugswert (c) erlaubt: Den Einstellwert verringern. Änderung pro Schritt: 0,5 mm
3. Den Einstellwert durch Drücken der [Start]-Taste bestätigen.
4. Eine Testkopie erstellen.
5. Wiederholen Sie die Schritte 1 bis 4 solange, bis die Lochposition sich innerhalb der Referenz befindet.
<Bezugswert (c)>
Metrischer Abstand: 13,0mm ±2mm
Abstand in Zoll: 9,5mm ±2mm (0,37" ± 0,08")

Regolazione spostamento di posizione dei fori di perforazione

1. Impostare la modalità manutenzione U246 e selezionare [Finisher] > [Punch Feed].
2. Regolare i valori.
Se la posizione dei fori di perforazione è più vicina al bordo rispetto al valore di riferimento (c): Aumentare il valore dell'impostazione.
Se la posizione dei fori di perforazione è più lontana dal bordo rispetto al valore di riferimento (c): Diminuire il valore dell'impostazione.
Entità modifica per passo: 0,5 mm
3. Premere il tasto di [Avvio] per confermare il valore dell'impostazione.
4. Eseguire una copia di prova.
5. Ripetere i punti da 1 a 4 fino a portare la posizione di foratura all'interno del riferimento.
<Valore di riferimento (c)>
Specificazione in unità metrica: 13,0mm ±2mm
Specificazione in pollici: 9,5mm ±2mm (0,37" ± 0,08")

打孔位置搬运调节

1. 进入维修保养模式 U246，把 [Finisher] > [Punch Feed]。
2. 调整设定值。
打孔位置比基准值 (c) 短时：调高设定值。
打孔位置比基准值 (c) 长时：调低设定值。
设定值的一个调整单位变化量：0.5㎜
3. 按 [开始] 键，以确定设定值。
4. 进行测试复印。
5. 重复步骤 1 ～ 4，直至打孔的孔的位置达到标准值。
＜基准值 (c) ＞
公制规格：13.0㎜±2㎜
英制规格：9.5㎜±2㎜(0.37" ±0.08")

펀치위치 반송조정

1. 메인터넌스 모드 U246 를 설정하고 [Finisher] > [Punch Feed] 를 선택합니다 .
2. 설정치를 조정합니다 .
펀치구멍의 위치가 기준치 (c) 보다 짧은 경우 : 설정치를 높입니다 .
펀치구멍의 위치가 기준치 (c) 보다 긴 경우 : 설정치를 내립니다 .
1 스텝당 변화량 : 0.5mm
3. [복사 / 시작] 키를 누르고 설정치를 확인합니다 .
4. 테스트 카피를 합니다 .
5. 펀치 구멍 위치가 기준 이내가 될 때까지 1 단계 ~ 4 단계를 반복 수행합니다 .
＜기준치 (c) ＞
센티사양 : 13.0mm±2mm
인치사양 : 9.5mm ±2mm (0.37"±0.08")

パンチ位置搬送調整

1. メンテナンスモード U246 をセットし、[Finisher] > [Punch Feed] を選択する。
2. 設定値を調整する。
パンチ穴の位置が基準値 (c) より短い場合 : 設定値を上げる。
パンチ穴の位置が基準値 (c) より長い場合 : 設定値を下げる。
1 ステップ当たりの変化量 : 0.5㎜
3. [スタート] キーを押し、設定値を確定する。
4. テストコピーを行う。
5. パンチ穴の位置が基準値内になるまで、手順 1 ～ 4 を繰り返す。
＜基準値 (c) ＞
センチ仕様 : 13.0㎜±2㎜
インチ仕様 : 9.5㎜±2㎜ (0.37" ±0.08")

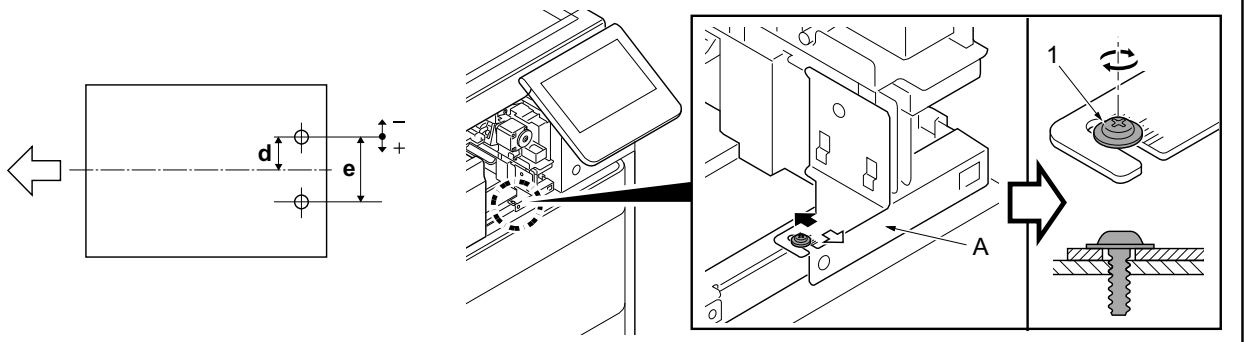

Centering the hole punch position
Adjust the position of the punch unit A. (MP tray paper feed)
1. If the punch hole is too close to the front of the machine:
Slide the punch unit A to the machine rear (⬅).
If the punch hole is too close to the rear of the machine:
Slide the punch unit A to the machine front (⇨).
2. Retighten the screws (1).
3. Perform a test copy.(MP tray paper feed)
4. Repeat the steps 1 to 3 until the hole punch position is within the reference.
<Reference value (d) >
Metric specification: d = 40.0mm ± 2mm,e=80.0mm±0.5mm (e:Unadjustable)
Inch specification: d = 34.93mm ± 2mm (1.38" ± 0.08"),
e=69.85mm±0.5mm(2.75"±0.02") (e:Unadjustable)
* Proceed to step 26 on page 8.
* If the center line for the cassette feed is shifted, adjust it as in the next page.

Centrage de la position de perforation
Régler la position de l'unité de perforation A. (Alimentation papier du bac MF)
1. Si la perforation est trop proche de l'avant de la machine:
Faire glisser l'unité de perforation A à l'arrière de la machine (⬅).
Si la perforation est trop proche de l'arrière de la machine:
Faire glisser l'unité de perforation A à l'avant de la machine (⇨).
2. Resserrez les vis (1).
3. Effectuer une copie de test.(Alimentation papier du bac MF)
4. Répéter les étapes 1 à 3 jusqu'à ce que la position de perforation soit dans la référence.
<Valeur de référence (d) >
Spécifications métriques: d = 40,0mm ± 2mm ,e=80.0mm±0.5mm(e:Ajustement impossible)
Spécifications en pouces: d = 34,93 mm ± 2mm (1,38" ± 0,08"),
e=69.85mm±0.5mm(2.75"±0.02") (e:Ajustement impossible)
* Passer à l'étape 26 de la page 8.
* Si la ligne centrale pour l'alimentation du magasin est décalée, effectuer l'ajustement comme indiqué à la page suivante.

Centrado de la posición de perforación
Ajuste la posición de la perforadora A.(Recarga de papel de la bandeja MP (multiuso))
1. Si la perforación se encuentra demasiado cerca del frente de la máquina:
Deslice la perforadora A hacia la parte posterior de la máquina (⬅).
Si la perforación se encuentra demasiado cerca de la parte trasera de la máquina:
Deslice la perforadora A hacia el frente de la máquina (⇨).
2. Apriete de nuevo los tornillos (1).
3. Haga una copia de prueba.(Recarga de papel de la bandeja MP (multiuso))
4. Repita los pasos del 1 al 3 hasta que la posición de perforación de los agujeros esté dentro de los valores de referencia.
<Valor de referencia (d) >
Sistema métrico: d = 40,0mm ± 2mm,e=80.0mm±0.5mm (e:No ajustable)
En pulgadas: d = 34,93mm ± 2mm (1,38" ± 0,08"),
e=69.85mm±0.5mm(2.75"±0.02") (e:No ajustable)
* Vaya al paso 26 de la página 8.
* Si la línea central del depósito de papel está desplazada, ajustela como se indica en la siguiente página.

Zentrieren der Stanzlochposition
Stellen Sie die Position der Lochereinheit A ein.(Einzug aus Universalzufuhr)
1. Falls die Lochung zu nah an der Gerätefront liegt:
Schieben Sie die Lochereinheit A zur Geräterückseite (⬅).
Falls die Lochung zu weit weg von der Gerätefront liegt:
Schieben Sie die Lochereinheit A zur Gerätevorderseite (⇨).
2. Ziehen Sie die Schrauben (1) wieder fest.
3. Eine Testkopie erstellen.(Einzug aus Universalzufuhr)
4. Wiederholen Sie die Schritte 1 bis 3 solange, bis die Lochposition sich innerhalb der Referenz befindet.
<Bezugswert (d) >
Metrischer Abstand: d = 40,0mm ± 2mm, e=80.0mm±0.5mm (e:Nicht einstellbar)
Abstand in Zoll: d = 34,93 mm ± 2mm (1,38" ± 0,08"),
e=69.85mm±0.5mm(2.75"±0.02") (e:Nicht einstellbar)
* Weitergehen zu Schritt 26 auf Seite 8.
* Falls der Einzug aus der Kassette nicht mehr mittig erfolgt, stellen Sie ihn wie folgt ein.

Centratura della posizione dei fori di perforazione
Regolare la posizione dell'unità di perforazione A.(Alimentazione carta da bypass)
1. Se la posizione dei fori di perforazione è troppo vicina alla parte anteriore della macchina: Far scivolare l'unità di perforazione A verso il retro della macchina (⬅).
Se la posizione dei fori di perforazione è troppo vicina alla parte posteriore della macchina: Far scivolare l'unità di perforazione A verso la parte anteriore della macchina (⇨).
2. Stringere di nuovo le viti (1).
3. Eseguire una copia di prova.(Alimentazione carta da bypass)
4. Ripetere i punti da 1 a 3 fino a portare la posizione di foratura all'interno del riferimento.
<Valore di riferimento (d) >
Specificazione in unità metrica: d = 40,0mm ± 2mm, e=80.0mm±0.5mm (e:Non regolabile)
Specificazione in pollici: d =34,93 mm ± 2mm (1,38" ± 0,08"),
e=69.85mm±0.5mm(2.75"±0.02")(e:Non regolabile)
* Procedere al passo 26 a pagina 8.
* Se la linea centrale del cassetto si è spostata, regolarla come indicato nella pagina successiva.

打孔位置中心调节
调整打孔组件(A)的位置。(手送托盘供纸)
1. 打孔位置向机器前部偏移时:把打孔组件(A)向机器后侧移动。(⬅)
打孔位置向机器后部偏移时:把打孔组件(A)向机器前侧移动。(⇨)
2. 拧紧螺丝(1)。
3. 进行测试复印。(手送托盘供纸)
4. 重复步骤1～3,直至打孔的孔的位置达到标准值。
<基准值(d)>
公制规格:d=40.0㎜±2㎜ , e=80.0㎜±0.5㎜(e:不可调整)
英制规格:d=34.93㎜±2㎜(1.38"±0.08"),
e=69.85㎜±0.5㎜(2.75"±0.02")(e:不可调整)
※跳至P8的步骤26。
※纸盒供纸时,如果中心位置发生偏移,请实施下页的调整。

펀치위치 센터조정
펀치유니트 A 의 위치를 조정하세요.(수동급지대)
1. 펀치구멍의 위치가 기기 앞측으로 벗어난 경우:펀치유니트 A 를 기기의 뒤쪽으로 밀어주세요.(⬅)
펀치구멍의 위치가 기기 뒷측으로 벗어난 경우:펀치유니트 A 를 기기의 앞쪽으로 당겨주세요.(⇨)
2. 나사 (1) 를 다시 조입니다.
3. 테스트 카피를 합니다.(수동급지대)
4. 펀치 구멍 위치가 기준 이내가 될 때까지 1 단계 ~ 3 단계를 반복 수행합니다.
<기준치 (d) >
센티사양:d=40.0mm±2mm , e=80.0mm±0.5mm (e: 조정 불가)
인치사양:d=34.93mm±2mm(1.38"±0.08") , e=69.85mm±0.5mm(2.75"±0.02") (e: 조정 불가)
※ P8 의 순서 26 로 진행.
※ 카세트 급지시 센터 라인이 맞지 않는 경우에는 다음페이지를 참조하여 조정을 하세요.

パンチ位置センター調整
パンチユニット(A)の位置調整を行う。(手差しトレイ給紙)
1. パンチ穴が機械前側にずれている場合
パンチユニット(A)を機械後側(⬅)にずらす。
パンチ穴が機械後側にずれている場合
パンチユニット(A)を機械前側(⇨)にずらす。
2. ビス(1)を締め付ける。
3. テストコピーを行う。(手差しトレイ給紙)
4. パンチ穴の位置が基準値内になるまで、手順1～3を繰り返す。
<基準値(d)>
センチ仕様:d=40.0㎜±2㎜,e=80㎜±0.5㎜(e:調整不可)
インチ仕様:d=34.93㎜±2㎜(1.38"±0.08"),
e=69.85㎜±0.5㎜(2.75"±0.02")(e:調整不可)
※P8 の手順 26 へ進む。
※ カセット給紙でセンター位置がずれている場合は、次頁の調整をおこなう。

6. Repeat the steps 1 to 5 until the hole punch position is within the reference.(For reference values, see page 12.)
7. Execute maintenance mode U034 [LSU Out Left/Center Line] and adjust the center line.(For details, see the instructions on Page 15 to Page 16.)

---

6. Répéter les étapes 1 à 5 jusqu'à ce que la position de perforation soit dans la référence.(Pour les valeurs de référence, voir page 12.)
7. Exécuter le mode maintenance U034 [LSU Out Left/Center Line] et ajuster la ligne centrale.(Pour plus de précision, se reporter aux instructions de la page 15 à la page 16.)

---

6. Repita los pasos del 1 al 5 hasta que la posición de perforación de los agujeros esté dentro de los valores de referencia.(Consulte la página 12 para los valores de referencia).
7. Ejecute el modo de mantenimiento U034 [LSU Out Left/Center Line] y ajuste la línea central.(Consulte las instrucciones en las páginas 15 y 16 para más detalle.)

---

6. Wiederholen Sie die Schritte 1 bis 5 solange, bis die Lochposition sich innerhalb der Referenz befindet.(Referenzwerte finden Sie auf Seite 12.)
7. Führen Sie im Wartungsmodus U034 [LSU Out Left/Center Line] aus und justieren Sie die Mittellinie.(Weitere Informationen siehe Seite 15 bis 16.)

---

6. Ripetere i punti da 1 a 5 fino a portare la posizione di foratura all'interno del riferimento.(Per i valori di riferimento, vedere a pagina 12.)
7. Eseguire la modalità di manutenzione U034 [LSU Out Left/Center Line] e regolare la linea centrale.(Per i dettagli, vedere le istruzioni a pagina 15 e 16.)

---

6. 重复步骤 1 ～ 5，直至打孔的孔的位置达到标准值。（基准值，请参照 P12。）
7. 实施维修保养模式 U034 的[LSU Out Left/Center Line]，进行中心线的调整。（详细步骤，请参见 P15-16。）

---

6. 펀치 구멍 위치가 기준 이내가 될 때까지 1 단계 ~ 5 단계를 반복 수행합니다 .(12 페이지의 값 참조 .)
7. 메인터넌스 모드 U034[LSU Out Left/Center Line] 를 실행하여 센터라인을 조정합니다 .(자세한 내용은 15~16 페이지를 참조하세요 .)

---

6. パンチ穴の位置が基準値内になるまで、手順 1 ～ 5 を繰り返す。（基準値は、12 ページ参照）
7. メンテナンスモード U034 の[LSU Out Left/Center Line]を実行し、センターラインを調整する。（詳細は、15 ～ 16 ページ参照）

---

6. Repeat the steps 1 to 5 until the hole punch position is within the reference.(For reference values, see page 12.)
7. Execute maintenance mode U034 [LSU Out Left/Center Line] and adjust the center line.(For details, see the instructions on Page 15 to Page 16.)

---

6. Répéter les étapes 1 à 5 jusqu'à ce que la position de perforation soit dans la référence.(Pour les valeurs de référence, voir page 12.)
7. Exécuter le mode maintenance U034 [LSU Out Left/Center Line] et ajuster la ligne centrale.(Pour plus de précision, se reporter aux instructions de la page 15 à la page 16.)

---

6. Repita los pasos del 1 al 5 hasta que la posición de perforación de los agujeros esté dentro de los valores de referencia.(Consulte la página 12 para los valores de referencia).
7. Ejecute el modo de mantenimiento U034 [LSU Out Left/Center Line] y ajuste la línea central.(Consulte las instrucciones en las páginas 15 y 16 para más detalle.)

---

6. Wiederholen Sie die Schritte 1 bis 5 solange, bis die Lochposition sich innerhalb der Referenz befindet.(Referenzwerte finden Sie auf Seite 12.)
7. Führen Sie im Wartungsmodus U034 [LSU Out Left/Center Line] aus und justieren Sie die Mittellinie.(Weitere Informationen siehe Seite 15 bis 16.)

---

6. Ripetere i punti da 1 a 5 fino a portare la posizione di foratura all'interno del riferimento.(Per i valori di riferimento, vedere a pagina 12.)
7. Eseguire la modalità di manutenzione U034 [LSU Out Left/Center Line] e regolare la linea centrale.(Per i dettagli, vedere le istruzioni a pagina 15 e 16.)

---

6. 重复步骤 1 ～ 5，直至打孔的孔的位置达到标准值。(基准值，请参照 P12。)
7. 实施维修保养模式 U034 的[LSU Out Left/Center Line]，进行中心线的调整。(详细步骤，请参见 P15-16。)

---

6. 펀치 구멍 위치가 기준 이내가 될 때까지 1 단계 ~ 5 단계를 반복 수행합니다 .(12 페이지의 값 참조 .)
7. 메인터넌스 모드 U034[LSU Out Left/Center Line] 를 실행하여 센터라인을 조정합니다 .(자세한 내용은 15~16 페이지를 참조하세요 .)

---

6. パンチ穴の位置が基準値内になるまで、手順 1 ～ 5 を繰り返す。
(基準値は、12 ページ参照)
7. メンテナンスモード U034 の[LSU Out Left/Center Line]を実行し、センターラインを調整する。(詳細は、15 ～ 16 ページ参照)

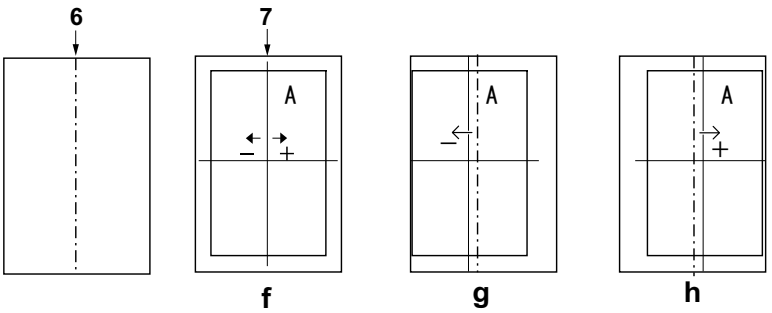

Adjusting the center line

1. Check the gap between the paper center (6) and the line (7) of test pattern (f). If the gap exceeds the reference value, adjust the gap according to the following procedure.
   <Reference value> within ±0.5mm.
2. Set the maintenance mode U034 and select [LSU Out Left/Center Line] > [Cassette1/Cass1] ,[Cassette2/Cass2],[Cassette3/Cass3]or [Cassette4/Cass4].

Réglage de l'axe

1. Vérifier l'espace entre le centre du papier (6) et la ligne (7) du motif de (f). Si l'écart excède la valeur de référence, le régler selon la procédure suivante.
   <Valeur de référence> ±0,5mm max.
2. Passez en mode maintenance U034 et sélectionnez [LSU Out Left/Center Line] > [Cassette1/Cass1],[Cassette2/Cass2],[Cassette3/Cass3] ou [Cassette4/Cass4].

Ajuste de la línea central

1. Compruebe el espacio entre el centro del papel (6) y la línea (7) del patrón de prueba (f). Si la separación supera el valor de referencia, ajústela siguiendo este procedimiento.
   <Valor de referencia> Dentro de ±0,5mm.
2. Configure el modo de mantenimiento U034 y seleccione [LSU Out Lef/Center Linet] > [Cassette1/Cass1],[Cassette2/Cass2] ,[Cassette3/Cass3] o [Cassette4/Cass4].

Einstellen der Mittenlinie

1. Überprüfen Sie den Abstand zwischen der Papiermitte (6) und der Linie (7) auf der Testseite (f). Wenn der Abstand größer als der Bezugswert ist, den Abstand mit dem folgenden Verfahren einstellen.
   <Bezugswert> Innerhalb ±0,5mm.
2. Aktivieren Sie den Wartungsmodus U034 und wählen Sie [LSU Out Left/Center Line] > [Cassette1/Cass1],[Cassette2/Cass2],[Cassette3/Cass3] oder [Cassette4/Cass4].

Regolazione della linea centrale

1. Controllare lo spazio tra il centro del foglio (6) e la linea (7) dello schema di prova (f). Se lo scostamento supera il valore di riferimento, regolare lo scostamento stesso seguendo questa procedura.
   <Valore di riferimento> Entro ±0,5mm.
2. Impostare la modalità manutenzione U034 e selezionare [LSU Out Left/Center Line] > [Cassette1/Cass1],[Cassette2/Cass2],[Cassette3/Cass3] o [Cassette4/Cass4].

中心线调节

1. 确认纸张的中心(3)和测试样张(d)的线(4)之间的偏移值。如果偏移值超过标准值，则按照下列步骤进行调整。
   〈标准值〉 ±0.5mm 以内
2. 进入维修保养模式 U034，把[LSU Out Left/Center Line] > [Cassette1/Cass1],[Cassette2/Cass2],[Cassette3/Cass3]或[Cassette4/Cass4]。

센터라인 조정

1. 용지 중앙 (6) 과 테스트 패턴 (f) 의 라인 (7) 사이의 격차를 확인하십시오 . 차이가 기준치 외의 경우 다음의 순서대로 조정을 합니다 .
   < 기준치 > ±0.5mm 이내
2. 메인터넌스 모드 U034 를 설정하고 [LSU Out Left/Center Line] > [Cassette1/Cass1],[Cassette2/Cass2],[Cassette3/Cass3] 또는 [Cassette4/Cass4] 을 선택합니다 .

センターライン調整

1. 紙のセンター(6) とテストパターン (f) の線 (7) のずれを確認する。ずれが基準値外の場合、次の手順で調整をおこなう。
   ＜基準値＞ ±0.5mm 以内
2. メンテナンスモード U034 をセットし、[LSU Out Left/Center Line] > [Cassette1/Cass1],[Cassette2/Cass2],[Cassette3/Cass3] または [Cassette4/Cass4] を選択する。

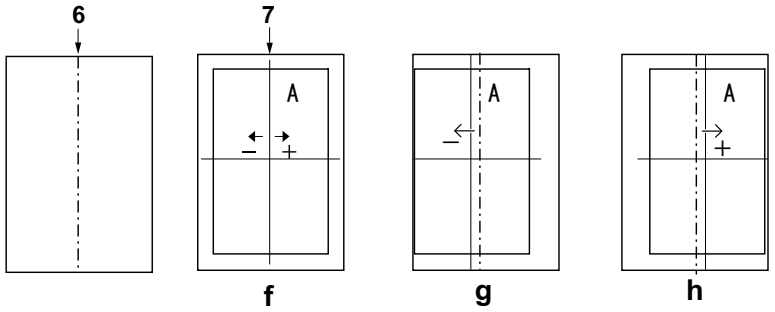

3. Adjust the values.
Test pattern (g) : Increase the setting value.
Test pattern (h) : Decrease the setting value.
Amount of change per step: 0.1mm
4. Press the [Start] key to confirm the setting value.
5. Print the test pattern.

6. Repeat the steps 2 to 5 above until the gap of line (7) in test pattern (f) is within the reference.
<Reference value> within ±0.5mm.

---

3. Régler les valeurs.
Mire d' essai (g) : Augmentez la valeur de réglage.
Mire d' essai (h) : Diminuez la valeur de réglage.
Changement par graduation d'échelle: 0,1mm
4. Appuyer sur la touche de [Départ] pour confirmer la valeur de réglage.
5. Imprimez le motif de test.

6. Répéter les étapes 2 à 5 ci-dessus jusqu'à ce que l'espace de la ligne (7) dans le motif de test (f) soit dans la référence.
<Valeur de référence> ±0,5mm max.

---

3. Ajuste los valores.
Patrón de prueba (g) : Aumente el valor de configuración.
Patrón de prueba (h) : Reduzca el valor de configuración.
Magnitud del cambio por incremento: 0,1mm
4. Pulse la tecla de [Inicio] para confirmar el valor de configuración.
5. Imprima el patrón de prueba.

6. Repita los pasos del 2 al 5 anteriores hasta que el espacio de línea (7) del patrón de prueba (f) esté dentro de los valores de referencia.
<Valor de referencia> dentro de ±0,5mm.

---

3. Die Werte einstellen.
Testmuster (g) : Den Einstellwert erhöhen.
Testmuster (h) : Den Einstellwert verringern.
Änderung pro Schritt: 0,1mm
4. Den Einstellwert durch Drücken der [Start]-Taste bestätigen.
5. Drucken Sie die Testseite aus.

6. Wiederholen Sie die Schritte 2 bis 5 solange, bis der Abstand der Linie (7) auf der Testseite (f) sich innerhalb der Referenz befindet.
<Bezugswert> Innerhalb ±0,5mm.

---

3. Regolare i valori.
Modello di prova (g) : Aumentare il valore dell'impostazione.
Modello di prova (h) : Diminuire il valore dell'impostazione.
Entità modifica per passo: 0,1mm
4. Premere il tasto di [Avvio] per confermare il valore dell'impostazione.
5. Stampare lo schema di prova.

6. Ripetere i punti da 2 a 5 sopra indicati fino a portare lo spazio della linea (7) nello schema di prova (f) all'interno del riferimento.
<Valore di riferimento> entro ±0,5mm

---

3. 调整设定值。
测试图案 (g) ：调高设定值。
测试图案 (h) ：调低设定值。
设定值的一个调整单位变化量：0.1㎜
4. 按 [开始] 键，以确定设定值。
5. 打印测试图案。

6. 重复步骤 2 ～ 5，直至测试样张 (d) 的线 (7) 的偏移值达到标准值以内。
〈标准值〉±0.5㎜以内

---

3. 설정치를 조정합니다 .
테트스 패턴 (g):설정치를 높입니다 .
테트스 패턴 (h):설정치를 내립니다 .
1 스텝당 변화량:0.1mm
4. [복사 / 시작] 키를 누르고 설정치를 확인합니다 .
5. 시험 패턴을 인쇄합니다 .

6. 테스트 패턴 (f) 에서 라인 (7) 의 격차가 기준 이내가 될 때까지 2 단계 ~ 5 단계를 반복 수행합니다 .
< 기준치 > ±0.5mm 이내

---

3. 設定値を調整する。
テストパターン (g) ：設定値を上げる。
テストパターン (h) ：設定値を下げる。
1 ステップ当たりの変化量:0.1㎜
4. [スタート] キーを押し、設定値を確定する。
5. テストパターンを出力する。

6. テストパターン (f) の線 (7) のずれが基準値内になるまで手順 2 ～ 5 を繰り返す。
〈基準値〉±0.5㎜以内



2020. 4
303RF5671101

PH-7100/PH-7110/PH-7120/PH-7130

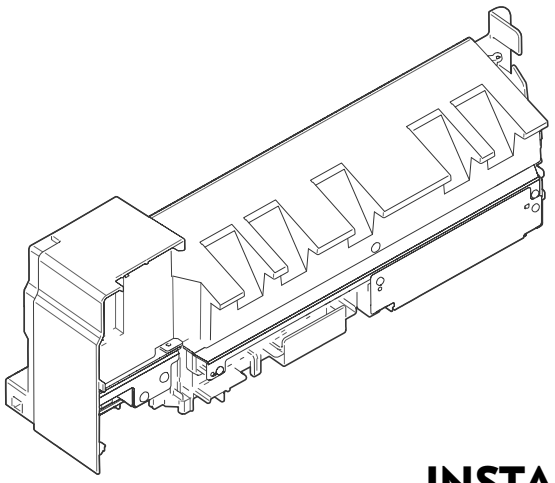

INSTALLATION GUIDE

GUIDE D'INSTALLATION

GUÍA DE INSTALACION

INSTALLATIONSANLEITUNG

GUIDA ALL'INSTALLAZIONE

安装手册

설치안내서

設置手順書

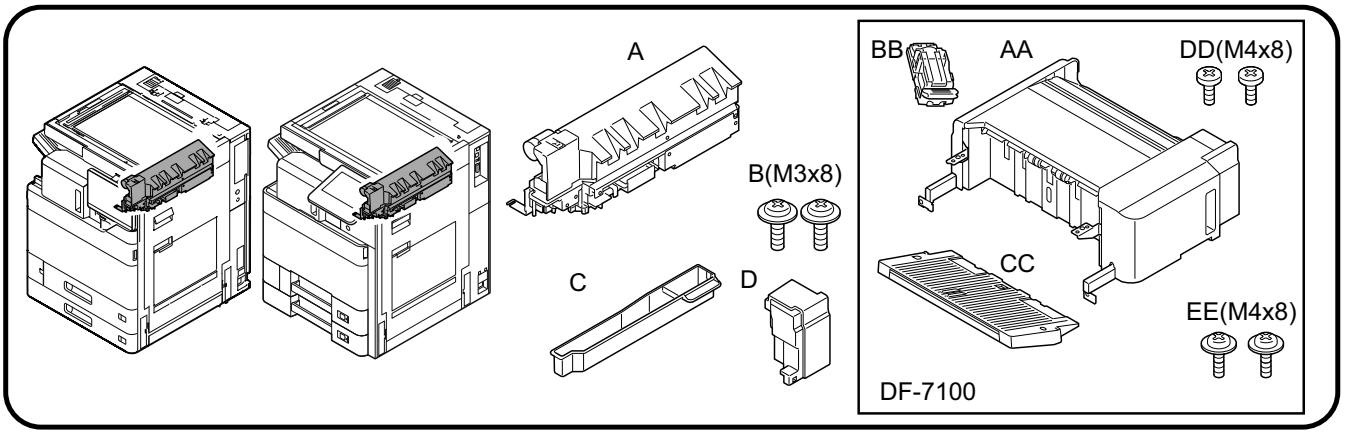

①

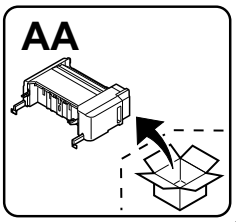

(EN) Be sure to remove any tape and/or cushioning materials from the parts supplied.

(FR) Veillez à retirer les morceaux de bande adhésive et/ou les matériaux de rembourrage des pièces fournies.

(ES) Asegúrese de quitar todas las cintas y/o material amortiguador de las partes suministradas.

(DE) Stellen Sie sicher, dass sämtliche Klebebänder und/oder Polstermaterial von den gelieferten Teilen entfernt wurden.

(IT) Rimuovere tutti i nastri adesivi e/o i materiali di protezione dalle parti fornite.

(ZHCN) 如果附属品上带有固定胶带，缓冲材料时务必揭下。

(KO) 동봉품에 고정 테이프 , 완충재가 붙어 있는 경우에는 반드시 제거하십시오.

(JA) 同梱品に固定テープ、緩衝材がついている場合は、必ず取り外すこと。

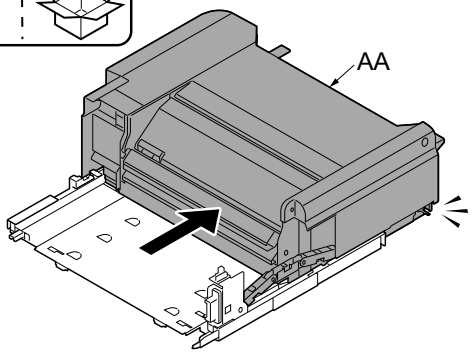

②

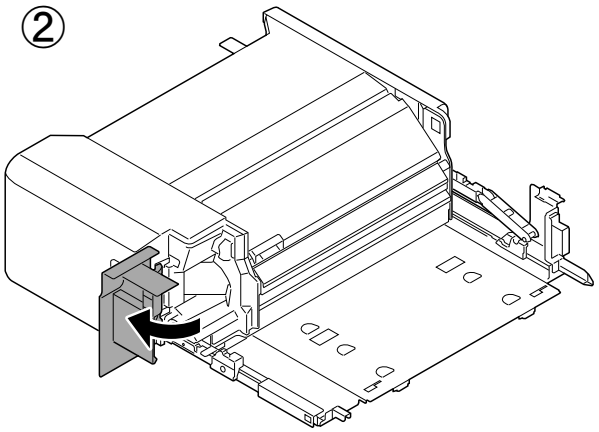

③

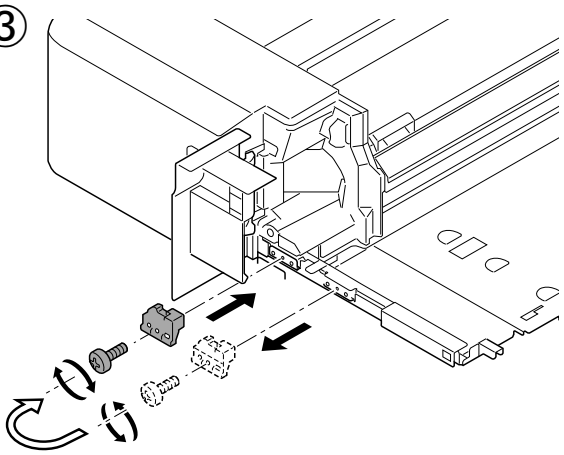

④

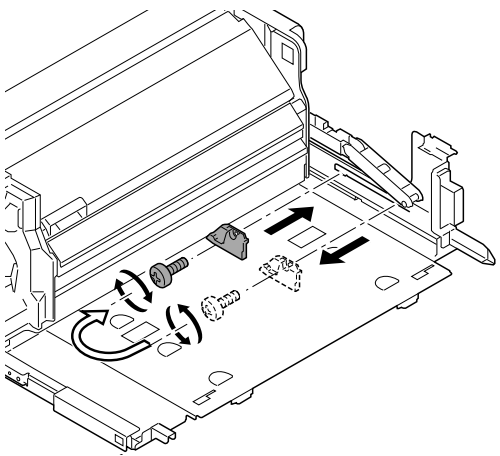

⑤

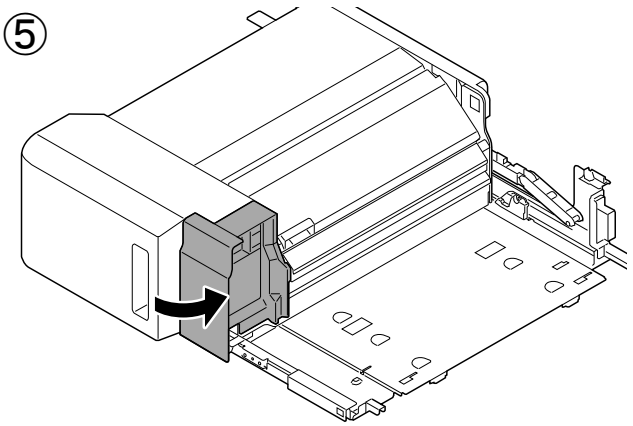

⑥

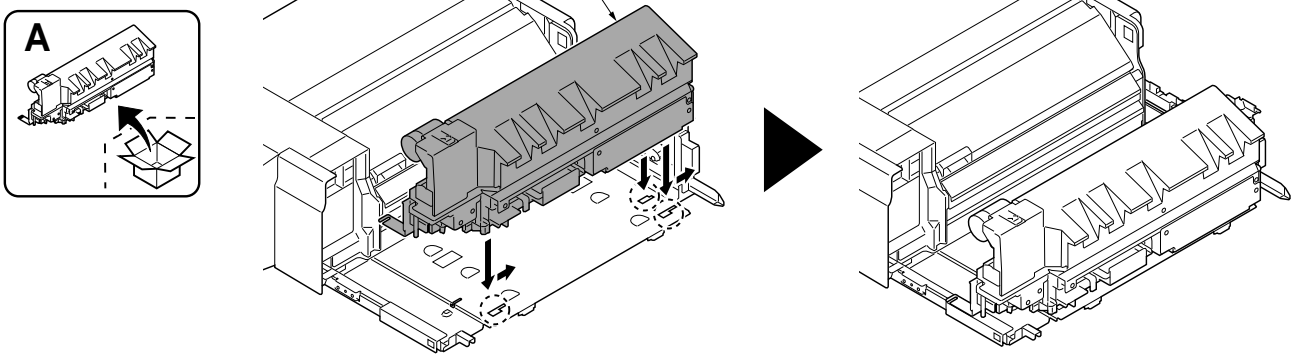

⑦

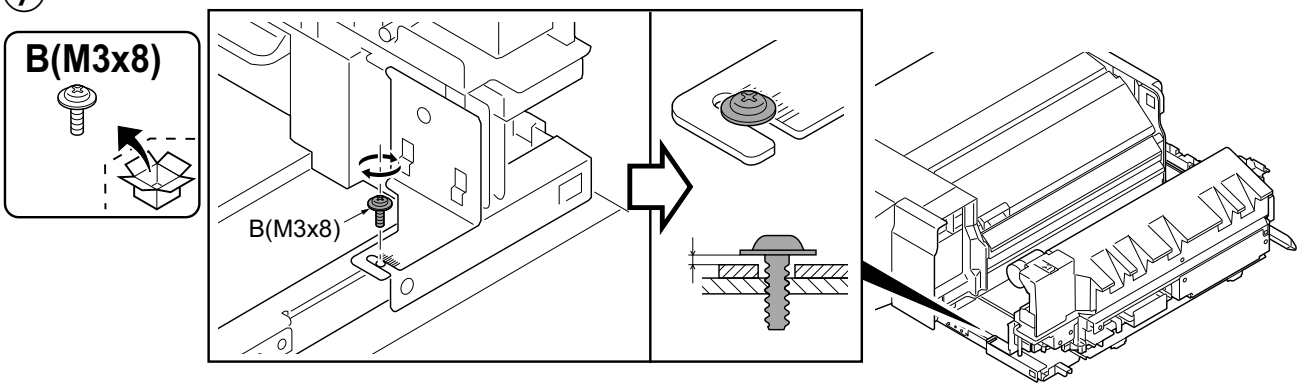

⑧

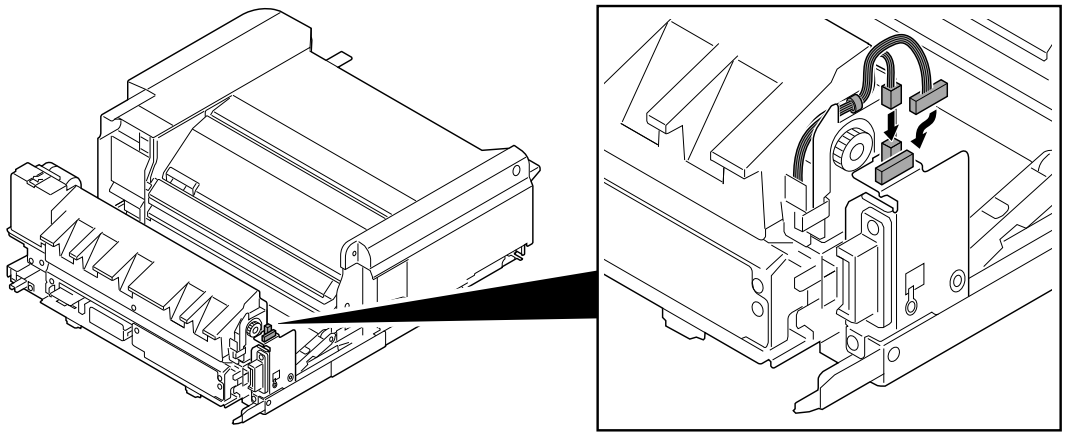

⑨

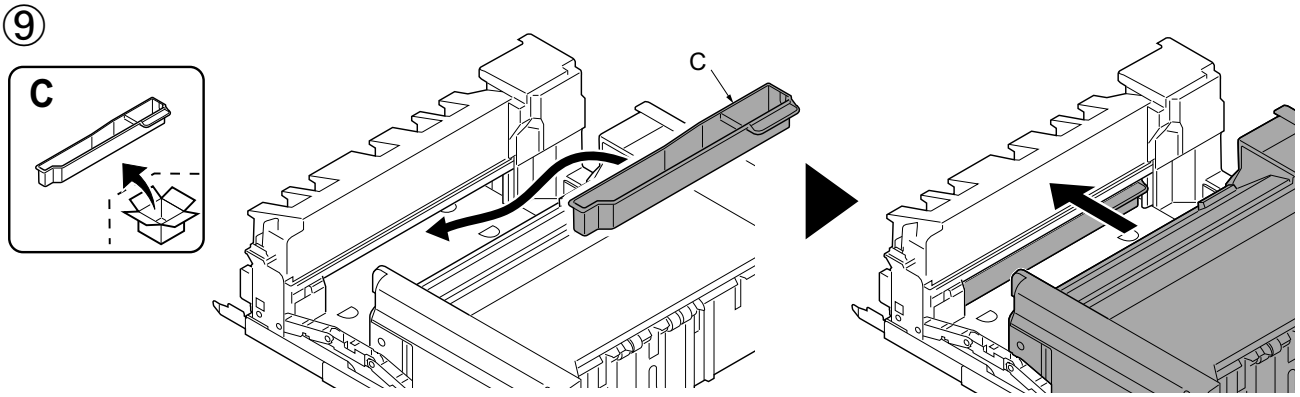

⑩

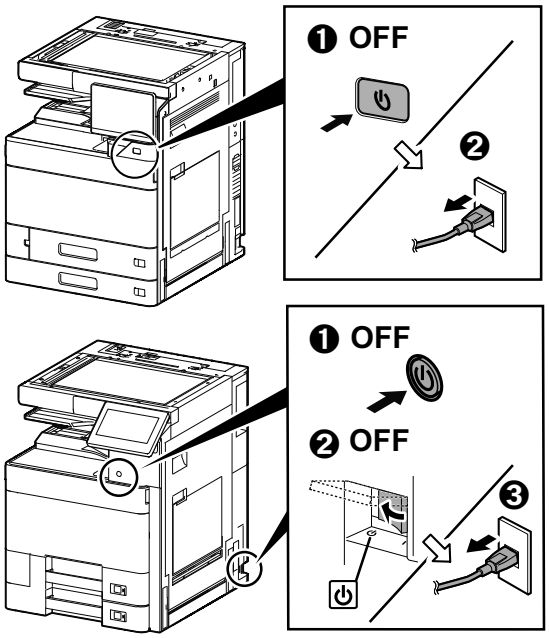

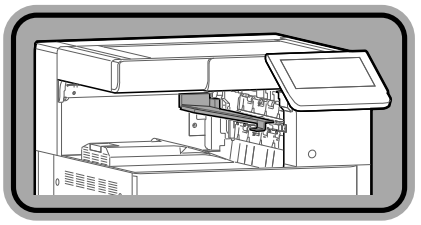

⇨ ⑪-1

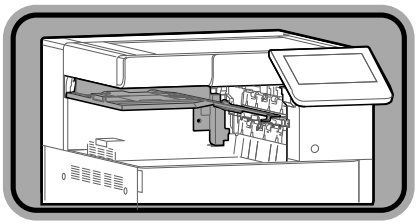

⇨ ⑪-2

⑪-1

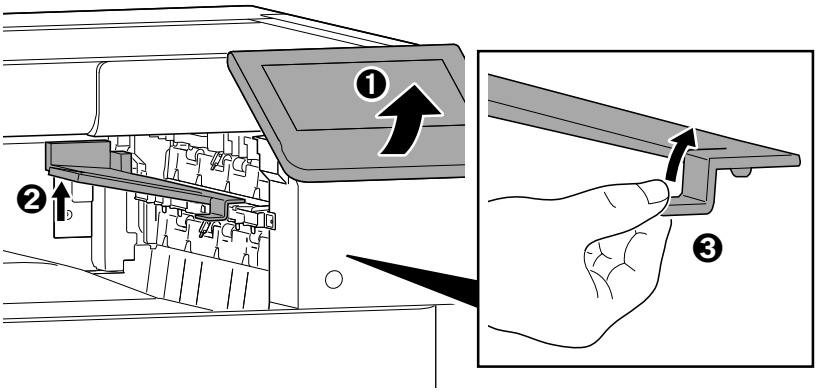

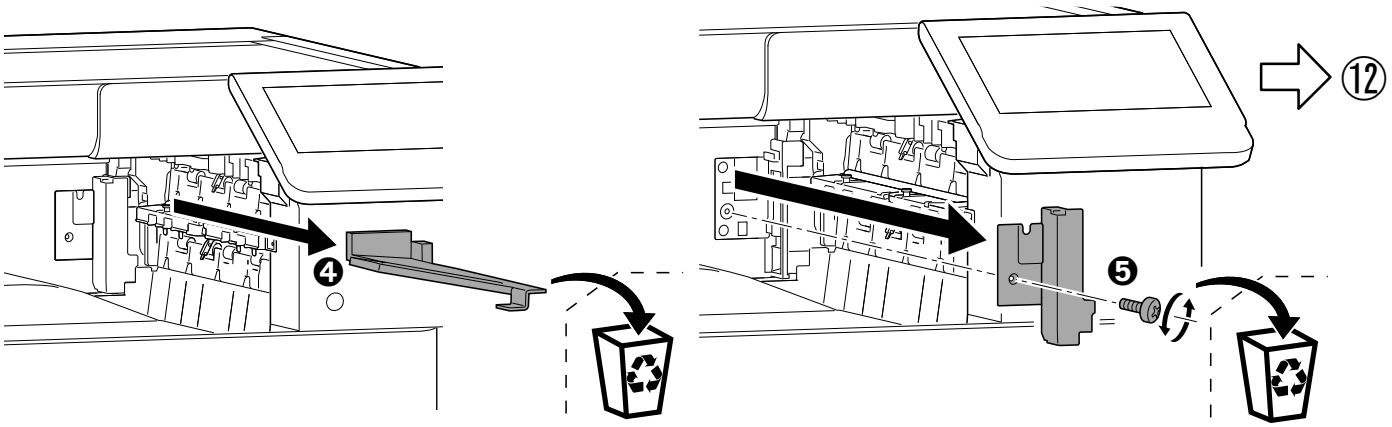

⇨ ⑫

⑪-2

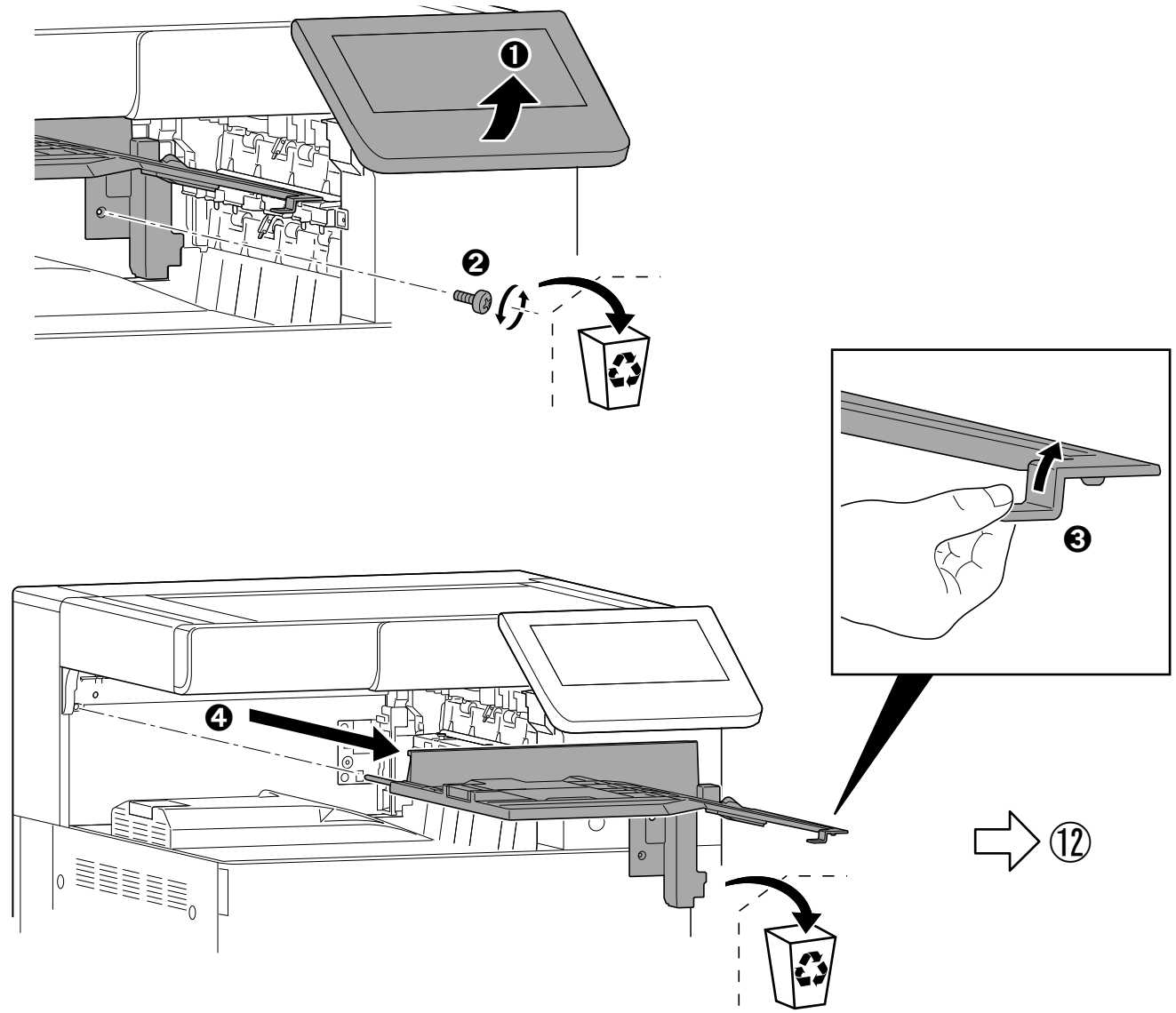

⑫

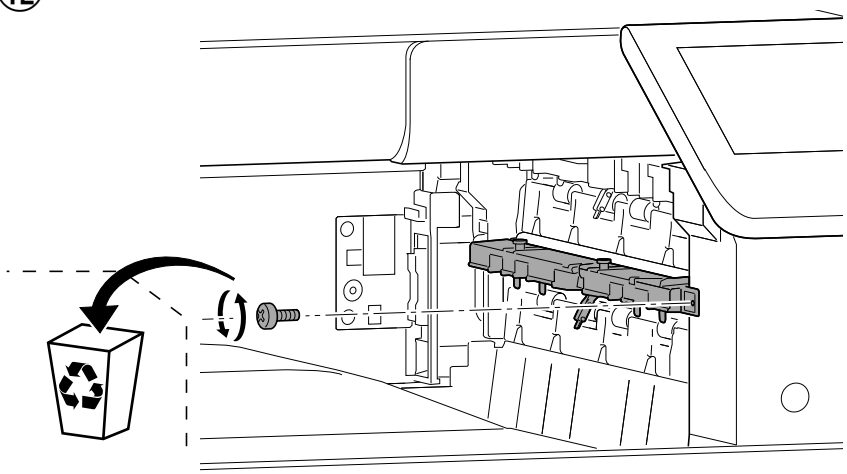

⑬

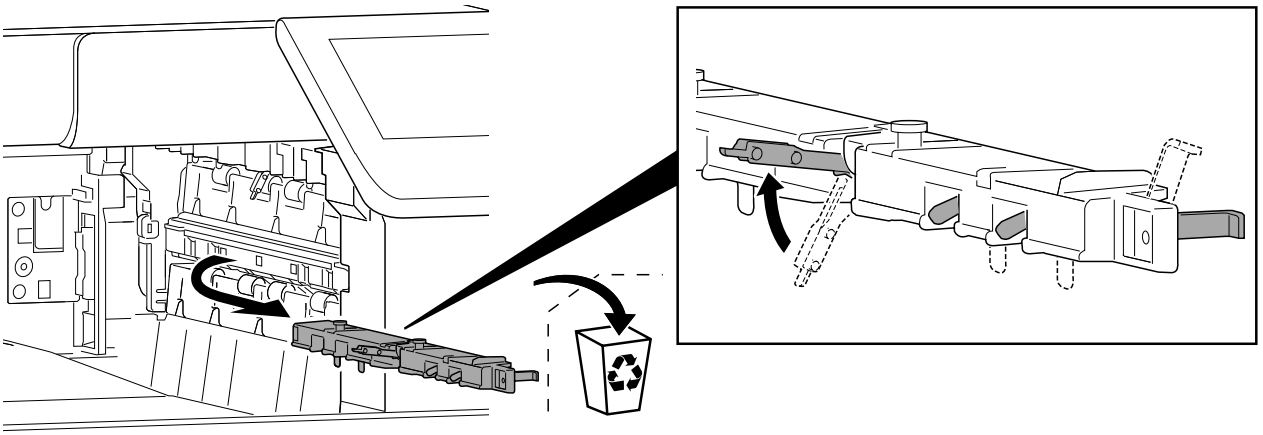

⑭

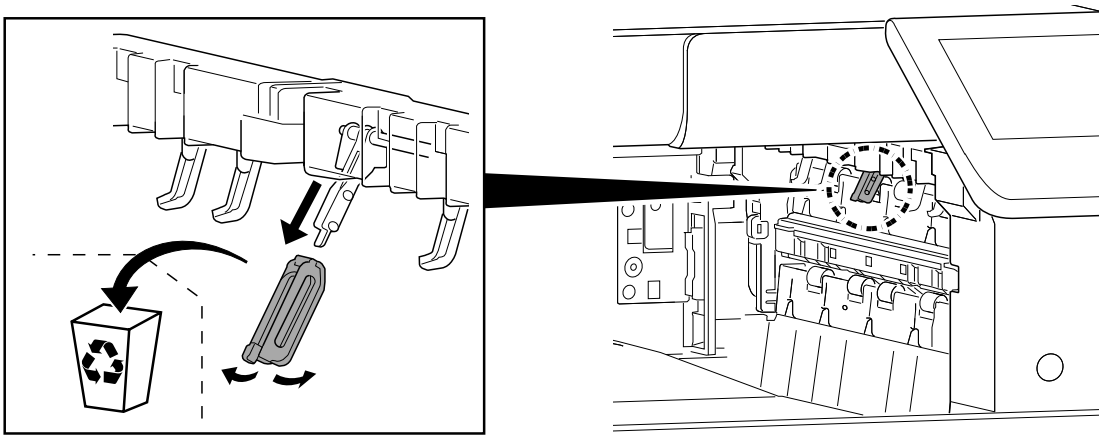

⑮

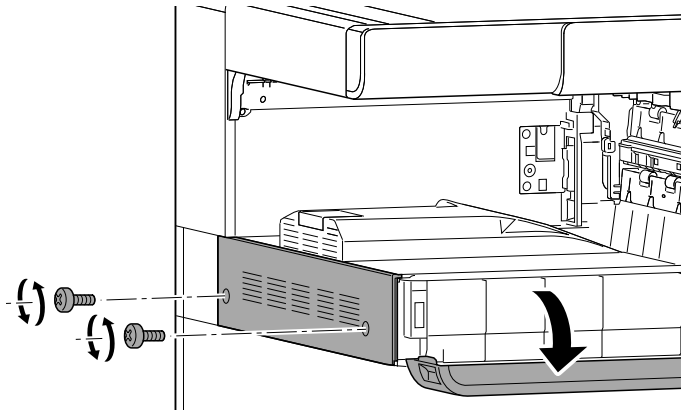

⑯

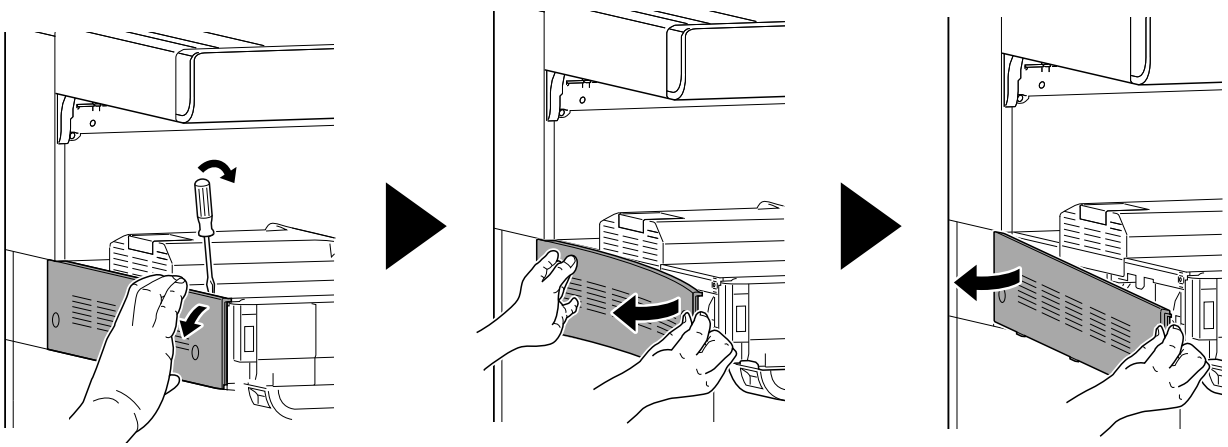

⑰

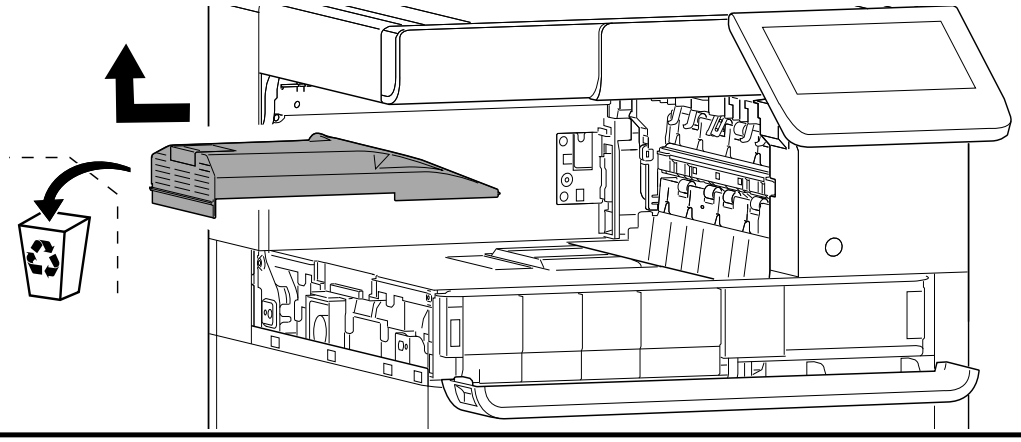

⑱

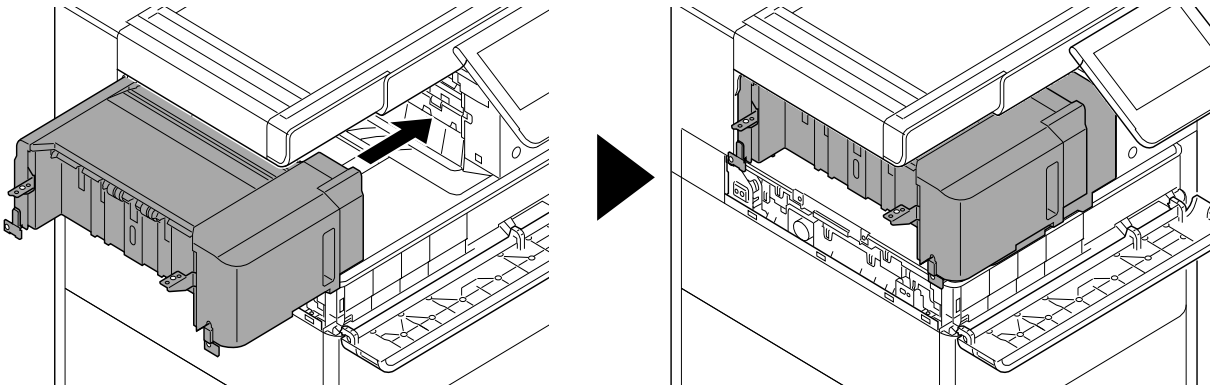

⑲

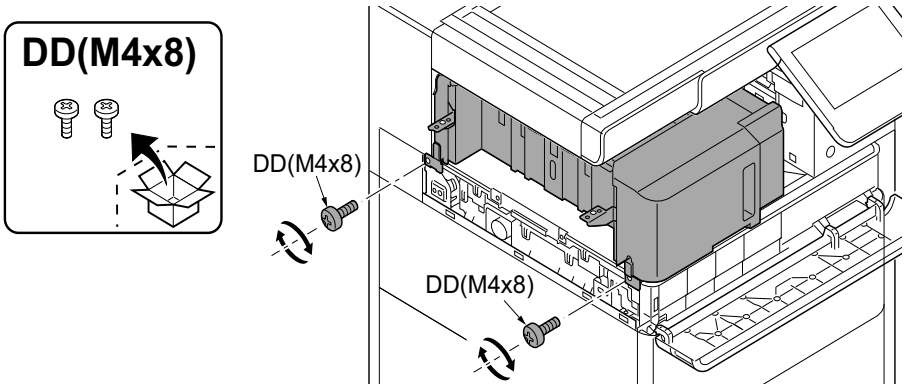

⑳

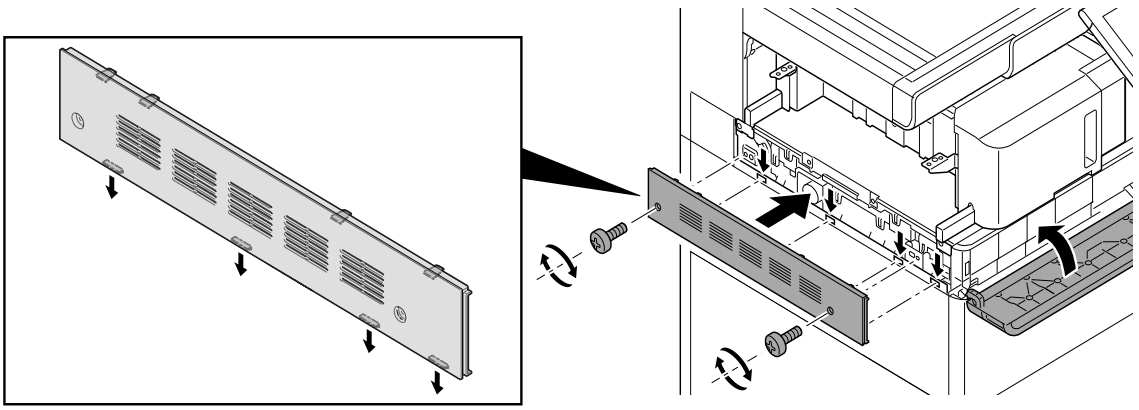

㉑

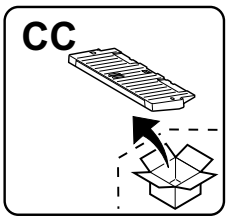

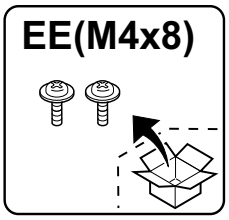

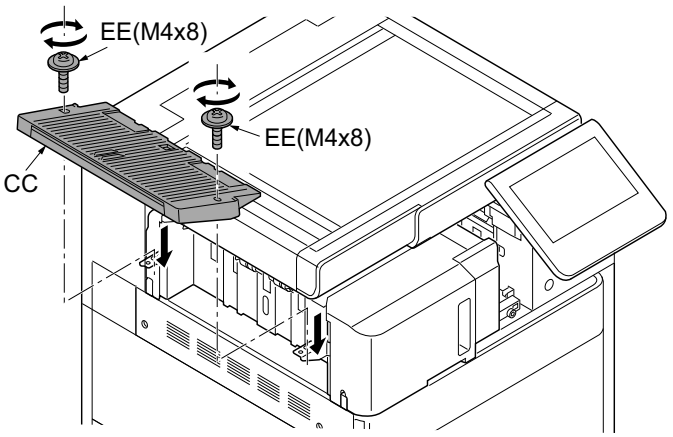

㉒

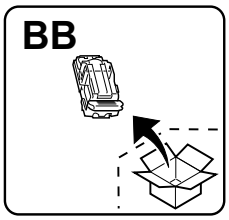

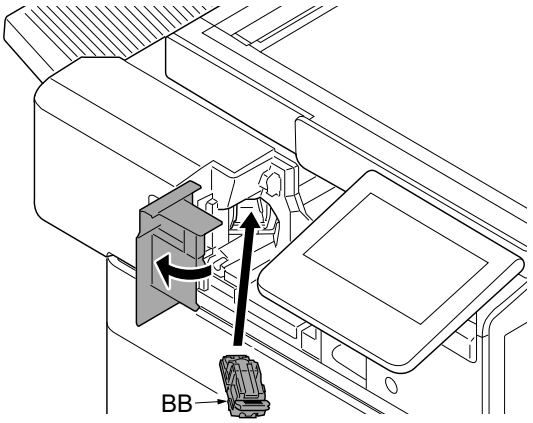

㉓

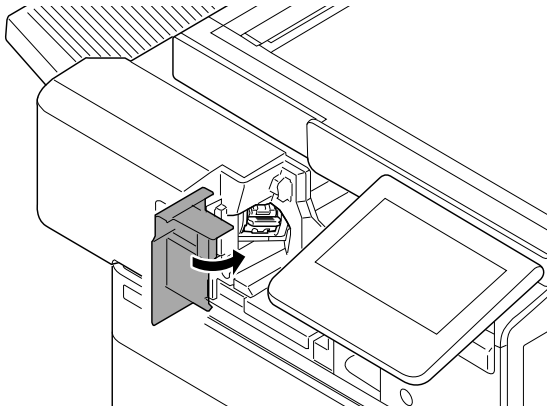

㉔

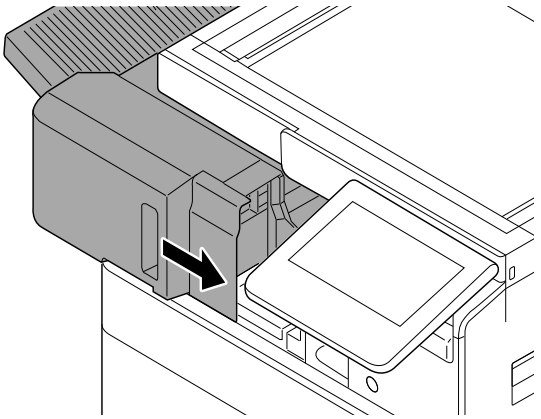

㉕

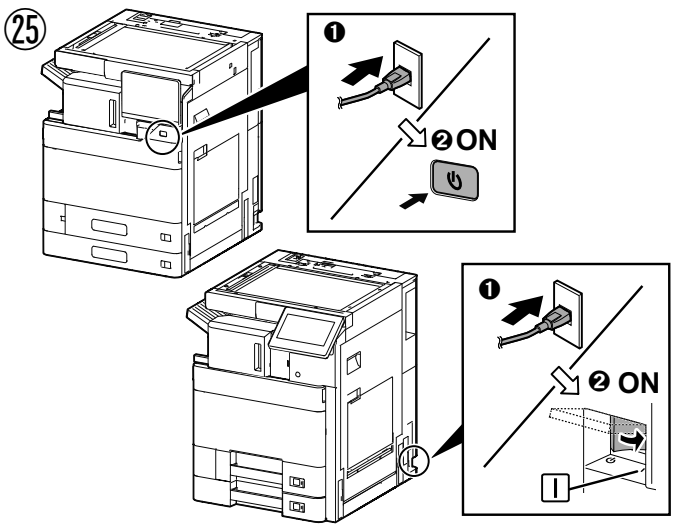

(EN) Proceed to step 1 on page 9.
(FR) Passer à l'étape 1 de la page 9.
(ES) Vaya al paso 1 de la página 9.
(DE) Weitergehen zu Schritt 1 auf Seite 9.
(IT) Procedere al passo 1 a pagina 9.
(ZHCN) 跳至 P9 的步骤 1。
(KO) P9 의 순서 1 로 진행 .
(JA) P9 の手順 1へ進む。

㉖

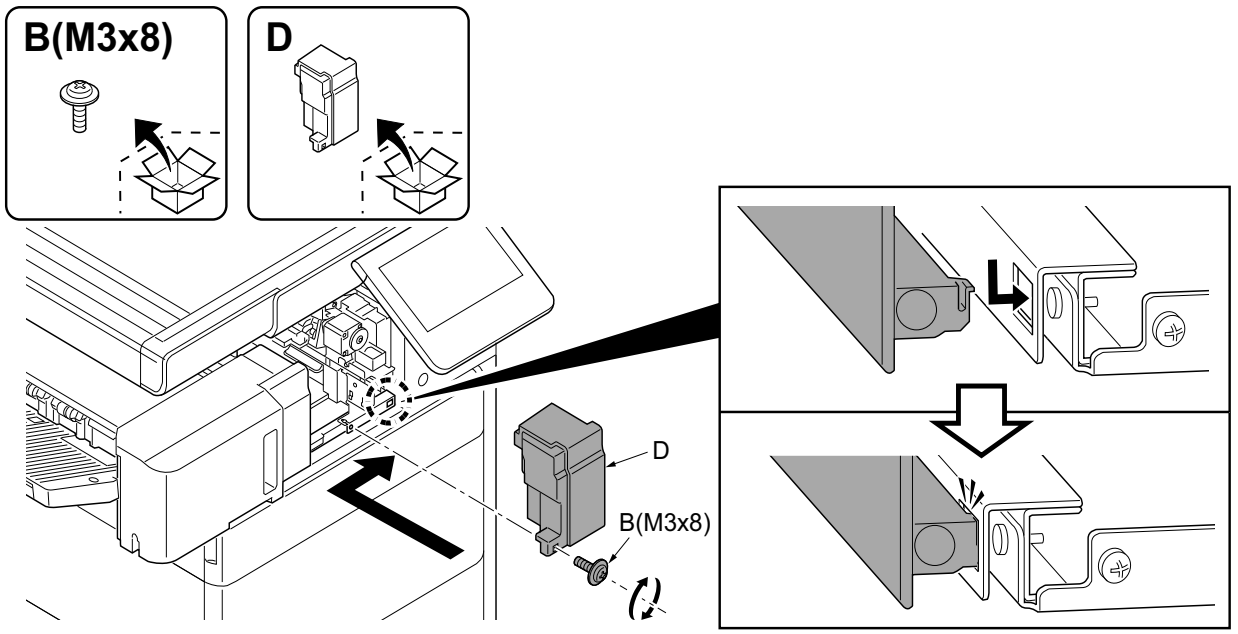

㉗

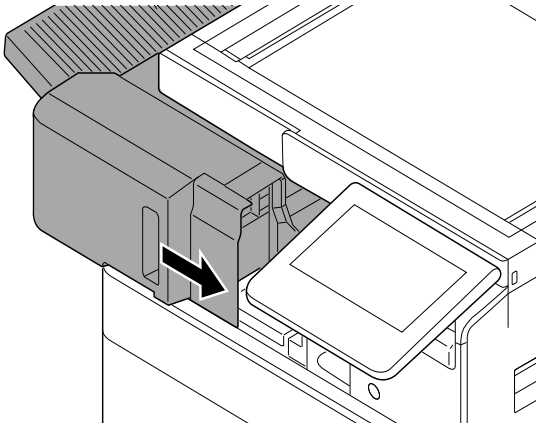

(EN)

[Adjusting the hole punch position]

1. Make a test copy in punch mode.

2. If any off-centering is observed, follow the procedure below to adjust the hole position.
(For the referrence value, refer to each adjustment content.)

(FR)

[Réglage de la position des perforations]

1. IEffectuer une copie d'essai en mode perforation.

2. Si les perforations sont décentrées, suivre la procédure ci-dessous pour ajuster la position de perforation.
(Pour la valeur de référence, se reporter à chaque contenu d'ajustement.)

(ES)

[Ajuste de la posición de perforación]

1. Haga una copia de prueba en el modo de perforación.

2. Si observa descentrado, siga el procedimiento de abajo para ajustar la posición del agujero.
(Para información sobre el valor de referencia, consulte el contenido de cada ajuste.)

(DE)

[Einstellen der Lochungsposition]

1. Eine Testkopie im Lochungsmodus erstellen.

2. Falls eine außermittige Lochung erfolgte, ist die Lochungsposition wie folgend nachzustellen.
(Den Referenzwert finden Sie im jeweiligen Einstellungsabschnitt.)

(IT)

[Regolazione di posizione dei fori di perforazione]

1. Eseguire una copia di prova in modalità di perforazione.

2. Nel caso in cui non lo siano, eseguire la procedura indicata qui di seguito per regolarne la posizione.
(Per informazioni sul valore di riferimento vedere il contenuto di ogni regolazione.)

(ZHCN)

[打孔位置的调节]

1. 在打孔模式下进行测试复印。
2. 打孔位置有偏差时，按以下步骤进行调节。
（标准值请参照各调整内容。）

(KO)

[펀치위치의 조정]

1. 펀치모드에서 시험복사를 합니다 .
2. 펀치위치가 벗어난 경우에는 다음 순서로 조정합니다 .
(기준 값에 대해서는 각 조정 내용을 참조하십시오 .)

(JA)

[パンチ位置の調整]

1. パンチモードでテストコピーを行う。
2. パンチ位置がずれていた場合、次の手順で調整を行う。
（基準値は、各調整内容を参照のこと。）

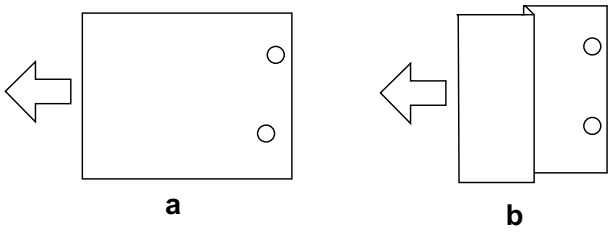

Adjusting the hole punch entry registration

1. Set the maintenance mode U246 and select [Finisher] > [Punch Regist].
2. Adjust the values.
When the paper fed in skewed copy example (a): Increase the setting value.
When the paper crimped copy example (b): Decrease the setting value.
Amount of change per step: 0.25mm
3. Press the [Start] key to confirm the setting value.

Réglage de l'enregistrement de l'entrée des perforations

1. Passer en mode maintenance U246, sélectionner [Finisher] > [Punch Regist].
2. Régler les valeurs.
Si le papier est alimenté de travers exemple de copie (a): Augmentez la valeur de réglage.
Si le papier est froissé exemple de copie (b): Diminuez la valeur de réglage.
Changement par graduation d'échelle: 0,25mm
3. Appuyer sur la touche de [Départ] pour confirmer la valeur de réglage.

Ajuste del registro de entrada de perforación

1. Configure el modo de mantenimiento U246 y seleccione [Finisher] > [Punch Regist].
2. Ajuste los valores.
Cuando el papel alimentado está torcido copia de muestra (a): Aumente el valor de configuración.
Cuando el papel se dobló copia de muestra (b): Reduzca el valor de configuración.
Magnitud del cambio por incremento: 0,25mm
3. Pulse la tecla de [Inicio] para confirmar el valor de configuración.

Einstellen der Lochungsregistrierung

1. Aktivieren Sie den Wartungsmodus U246 und wählen Sie [Finisher] > [Punch Regist].
2. Die Werte einstellen.
Wenn Papier verkantet eingezogen wird Kopiebeispiel (a): Den Einstellwert erhöhen.
Wenn Papier verknittert wird Kopiebeispiel (b): Den Einstellwert verringern.
Änderung pro Schritt: 0,25mm
3. Den Einstellwert durch Drücken der [Start]-Taste bestätigen.

Regolazione del registro del foro di perforazione

1. Impostare la modalità manutenzione U246 e selezionare [Finisher] > [Punch Regist].
2. Regolare i valori.
Quando l'alimentazione della carta risulta obliqua esempio di copia (a): Aumentare il valore dell'impostazione.
Quando la carta risulta increspata esempio di copia (b): Diminuire il valore dell'impostazione.
Entità modifica per passo: 0,25mm
3. Premere il tasto di [Avvio] per confermare il valore dell'impostazione.

打孔装入定位调节

1. 进入维修保养模式 U246，把［Finisher］>［Punch Regist］。
2. 调整设定值。
纸张斜向搬运时的复印样本 (a)：调高设定值。
纸张作 Z 字折时的复印样本 (b)：调低设定值。
设定值的一个调整单位变化量：0.25mm
3. 按［开始］键，以确定设定值。

펀치반입 레지스트 조정

1. 메인터넌스 모드 U246 를 설정하고 [Finisher] > [Punch Regist] 를 선택합니다 .
2. 설정치를 조정합니다 .
용지가 기울어져서 반송되는 경우의 복사샘플 (a):설정치를 높입니다 .
용지가 Z 꺾임이 있는 경우 복사샘플 (b):설정치를 내립니다 .
1 스텝당 변화량:0.25mm
3. [복사 / 시작] 키를 누르고 설정치를 확인합니다 .

パンチ搬入レジスト調整

1. メンテナンスモード U246 をセットし、[Finisher] > [Punch Regist] を選択する。
2. 設定値を調整する。
用紙が斜めに搬送される場合コピーサンプル (a):設定値を上げる。
用紙が Z 折れする場合コピーサンプル (b):設定値を下げる。
1 ステップ当たりの変化量:0.25mm
3. [スタート] キーを押し、設定値を確定する。

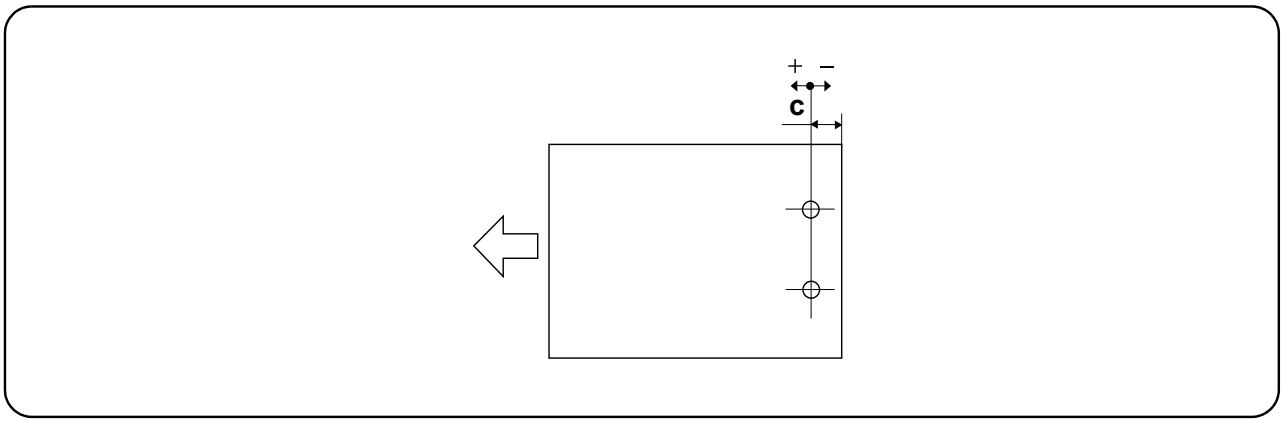

Adjusting the hole punch position feed

1. Set the maintenance mode U246 and select [Finisher] > [Punch Feed].
2. Adjust the values.
If the punch hole position is closer to the edge than the reference value (c): Increase the setting value.
If the punch hole position is further from the edge than the reference value (c): Decrease the setting value.
Amount of change per step: 0.5mm
3. Press the [Start] key to confirm the setting value.
4. Perform a test copy.
5. Repeat the steps 1 to 4 until the hole punch position is within the reference.
<Reference value (c)>
Metric specification: 13.0mm ±2mm
Inch specification: 9.5mm ±2mm (0.37" ± 0.08")

Réglage de la position du point de perforation

1. Passer en mode maintenance U246, sélectionner [Finisher] > [Punch Feed].
2. Régler les valeurs.
Si la perforation est plus proche du bord de la feuille que défini par la valeur de référence (c): Augmentez la valeur de réglage.
Si la perforation est plus loin du bord de la feuille que défini par la valeur de référence (c): Diminuez la valeur de réglage.
Changement par graduation d'échelle: 0,5mm
3. Appuyer sur la touche de [Départ] pour confirmer la valeur de réglage.
4. Effectuer une copie de test.
5. Répéter les étapes 1 à 4 jusqu'à ce que la position de perforation soit dans la référence.
<Valeur de référence (c)>
Spécifications métriques: 13,0mm ±2mm
Spécifications en pouces: 9,5mm ±2mm (0,37" ± 0,08")

Ajuste de la alimentación de la posición de perforación

1. Configure el modo de mantenimiento U246 y seleccione [Finisher] > [Punch Feed].
2. Ajuste los valores.
Si la posición de perforación está más cerca del borde que el valor de referencia (c): Aumente el valor de configuración.
Si la posición de perforación está más alejada del borde que el valor de referencia (c): Reduzca el valor de configuración.
Magnitud del cambio por incremento: 0,5mm
3. Pulse la tecla de [Inicio] para confirmar el valor de configuración.
4. Haga una copia de prueba.
5. Repita los pasos del 1 al 4 hasta que la posición de perforación de los agujeros esté dentro de los valores de referencia.
<Valor de referencia (c)>
Sistema métrico: 13,0mm ±2mm
En pulgadas: 9,5mm ±2mm (0,37" ± 0,08")

Einstellen des Transports der Lochungsposition

1. Aktivieren Sie den Wartungsmodus U246 und wählen Sie [Finisher] > [Punch Feed].
2. Die Werte einstellen.
Falls die Lochungsposition näher an der Kante liegt als der Bezugswert (c) erlaubt: Den Einstellwert erhöhen.
Falls die Lochungsposition ferner von der Kante liegt als der Bezugswert (c) erlaubt: Den Einstellwert verringern. Änderung pro Schritt: 0,5 mm
3. Den Einstellwert durch Drücken der [Start]-Taste bestätigen.
4. Eine Testkopie erstellen.
5. Wiederholen Sie die Schritte 1 bis 4 solange, bis die Lochposition sich innerhalb der Referenz befindet.
<Bezugswert (c)>
Metrischer Abstand: 13,0mm ±2mm
Abstand in Zoll: 9,5mm ±2mm (0,37" ± 0,08")

Regolazione spostamento di posizione dei fori di perforazione

1. Impostare la modalità manutenzione U246 e selezionare [Finisher] > [Punch Feed].
2. Regolare i valori.
Se la posizione dei fori di perforazione è più vicina al bordo rispetto al valore di riferimento (c): Aumentare il valore dell'impostazione.
Se la posizione dei fori di perforazione è più lontana dal bordo rispetto al valore di riferimento (c): Diminuire il valore dell'impostazione.
Entità modifica per passo: 0,5 mm
3. Premere il tasto di [Avvio] per confermare il valore dell'impostazione.
4. Eseguire una copia di prova.
5. Ripetere i punti da 1 a 4 fino a portare la posizione di foratura all'interno del riferimento.
<Valore di riferimento (c)>
Specificazione in unità metrica: 13,0mm ±2mm
Specificazione in pollici: 9,5mm ±2mm (0,37" ± 0,08")

打孔位置搬运调节

1. 进入维修保养模式 U246，把 [Finisher] > [Punch Feed]。
2. 调整设定值。
打孔位置比基准值 (c) 短时：调高设定值。
打孔位置比基准值 (c) 长时：调低设定值。
设定值的一个调整单位变化量：0.5mm
3. 按 [开始] 键，以确定设定值。
4. 进行测试复印。
5. 重复步骤 1 ～ 4，直至打孔的孔的位置达到标准值。
<基准值 (c) >
公制规格：13.0mm±2mm
英制规格：9.5mm±2mm(0.37" ±0.08")

펀치위치 반송조정

1. 메인터넌스 모드 U246 를 설정하고 [Finisher] > [Punch Feed] 를 선택합니다 .
2. 설정치를 조정합니다 .
펀치구멍의 위치가 기준치 (c) 보다 짧은 경우 : 설정치를 높입니다 .
펀치구멍의 위치가 기준치 (c) 보다 긴 경우 : 설정치를 내립니다 .
1 스텝당 변화량 : 0.5mm
3. [복사 / 시작] 키를 누르고 설정치를 확인합니다 .
4. 테스트 카피를 합니다 .
5. 펀치 구멍 위치가 기준 이내가 될 때까지 1 단계 ~ 4 단계를 반복 수행합니다 .
< 기준치 (c) >
센티사양 : 13.0mm±2mm
인치사양 : 9.5mm ±2mm (0.37"±0.08")

パンチ位置搬送調整

1. メンテナンスモード U246 をセットし、[Finisher] > [Punch Feed] を選択する。
2. 設定値を調整する。
パンチ穴の位置が基準値 (c) より短い場合：設定値を上げる。
パンチ穴の位置が基準値 (c) より長い場合：設定値を下げる。
1 ステップ当たりの変化量：0.5mm
3. [スタート] キーを押し、設定値を確定する。
4. テストコピーを行う。
5. パンチ穴の位置が基準値内になるまで、手順 1 ～ 4 を繰り返す。
< 基準値 (c) >
センチ仕様：13.0mm±2mm
インチ仕様：9.5mm±2mm (0.37" ±0.08")

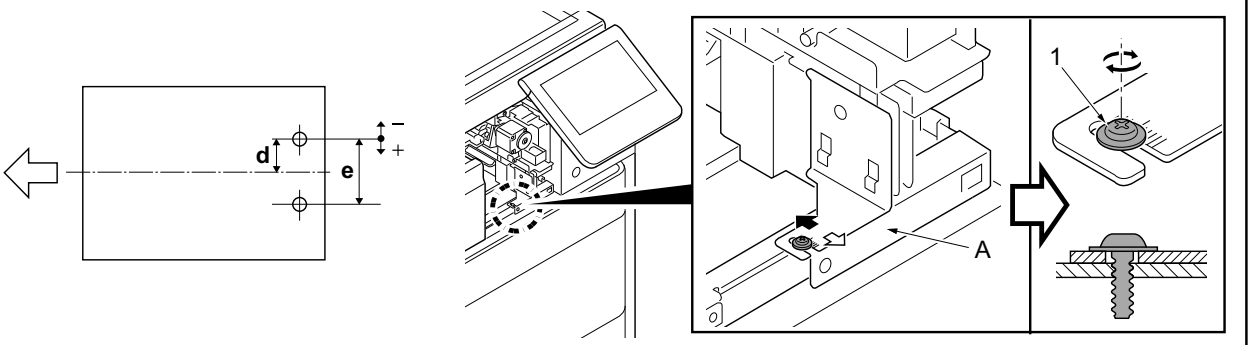

Centering the hole punch position
Adjust the position of the punch unit A. (MP tray paper feed)
1. If the punch hole is too close to the front of the machine:
Slide the punch unit A to the machine rear (⬅).
If the punch hole is too close to the rear of the machine:
Slide the punch unit A to the machine front (⇨).
2. Retighten the screws (1).
3. Perform a test copy.(MP tray paper feed)
4. Repeat the steps 1 to 3 until the hole punch position is within the reference.
<Reference value (d) >
Metric specification: d = 40.0mm ± 2mm,e=80.0mm±0.5mm (e:Unadjustable)
Inch specification: d = 34.93mm ± 2mm (1.38" ± 0.08"),
e=69.85mm±0.5mm(2.75"±0.02") (e:Unadjustable)
* Proceed to step 26 on page 8.
* If the center line for the cassette feed is shifted, adjust it as in the next page.

Centrage de la position de perforation
Régler la position de l'unité de perforation A. (Alimentation papier du bac MF)
1. Si la perforation est trop proche de l'avant de la machine:
Faire glisser l'unité de perforation A à l'arrière de la machine (⬅).
Si la perforation est trop proche de l'arrière de la machine:
Faire glisser l'unité de perforation A à l'avant de la machine (⇨).
2. Resserrez les vis (1).
3. Effectuer une copie de test.(Alimentation papier du bac MF)
4. Répéter les étapes 1 à 3 jusqu'à ce que la position de perforation soit dans la référence.
<Valeur de référence (d) >
Spécifications métriques: d = 40,0mm ± 2mm ,e=80.0mm±0.5mm(e:Ajustement impossible)
Spécifications en pouces: d = 34,93 mm ± 2mm (1,38" ± 0,08"),
e=69.85mm±0.5mm(2.75"±0.02") (e:Ajustement impossible)
* Passer à l'étape 26 de la page 8.
* Si la ligne centrale pour l'alimentation du magasin est décalée, effectuer l'ajustement comme indiqué à la page suivante.

Centrado de la posición de perforación
Ajuste la posición de la perforadora A.(Recarga de papel de la bandeja MP (multiuso))
1. Si la perforación se encuentra demasiado cerca del frente de la máquina:
Deslice la perforadora A hacia la parte posterior de la máquina (⬅).
Si la perforación se encuentra demasiado cerca de la parte trasera de la máquina:
Deslice la perforadora A hacia el frente de la máquina (⇨).
2. Apriete de nuevo los tornillos (1).
3. Haga una copia de prueba.(Recarga de papel de la bandeja MP (multiuso))
4. Repita los pasos del 1 al 3 hasta que la posición de perforación de los agujeros esté dentro de los valores de referencia.
<Valor de referencia (d) >
Sistema métrico: d = 40,0mm ± 2mm,e=80.0mm±0.5mm (e:No ajustable)
En pulgadas: d = 34,93mm ± 2mm (1,38" ± 0,08"),
e=69.85mm±0.5mm(2.75"±0.02") (e:No ajustable)
* Vaya al paso 26 de la página 8.
* Si la línea central del depósito de papel está desplazada, ajustela como se indica en la siguiente página.

Zentrieren der Stanzlochposition
Stellen Sie die Position der Lochereinheit A ein.(Einzug aus Universalzufuhr)
1. Falls die Lochung zu nah an der Gerätefront liegt:
Schieben Sie die Lochereinheit A zur Geräterückseite (⬅).
Falls die Lochung zu weit weg von der Gerätefront liegt:
Schieben Sie die Lochereinheit A zur Gerätevorderseite (⇨).
2. Ziehen Sie die Schrauben (1) wieder fest.
3. Eine Testkopie erstellen.(Einzug aus Universalzufuhr)
4. Wiederholen Sie die Schritte 1 bis 3 solange, bis die Lochposition sich innerhalb der Referenz befindet.
<Bezugswert (d) >
Metrischer Abstand: d = 40,0mm ± 2mm, e=80.0mm±0.5mm (e:Nicht einstellbar)
Abstand in Zoll: d = 34,93 mm ± 2mm (1,38" ± 0,08"),
e=69.85mm±0.5mm(2.75"±0.02") (e:Nicht einstellbar)
* Weitergehen zu Schritt 26 auf Seite 8.
* Falls der Einzug aus der Kassette nicht mehr mittig erfolgt, stellen Sie ihn wie folgt ein.

Centratura della posizione dei fori di perforazione
Regolare la posizione dell'unità di perforazione A.(Alimentazione carta da bypass)
1. Se la posizione dei fori di perforazione è troppo vicina alla parte anteriore della macchina: Far scivolare l'unità di perforazione A verso il retro della macchina (⬅).
Se la posizione dei fori di perforazione è troppo vicina alla parte posteriore della macchina: Far scivolare l'unità di perforazione A verso la parte anteriore della macchina (⇨).
2. Stringere di nuovo le viti (1).
3. Eseguire una copia di prova.(Alimentazione carta da bypass)
4. Ripetere i punti da 1 a 3 fino a portare la posizione di foratura all'interno del riferimento.
<Valore di riferimento (d) >
Specificazione in unità metrica: d = 40,0mm ± 2mm, e=80.0mm±0.5mm (e:Non regolabile)
Specificazione in pollici: d =34,93 mm ± 2mm (1,38" ± 0,08"),
e=69.85mm±0.5mm(2.75"±0.02")(e:Non regolabile)
* Procedere al passo 26 a pagina 8.
* Se la linea centrale del cassetto si è spostata, regolarla come indicato nella pagina successiva.

打孔位置中心调节
调整打孔组件(A)的位置。(手送托盘供纸)
1. 打孔位置向机器前部偏移时:把打孔组件(A)向机器后侧移动。(⬅)
打孔位置向机器后部偏移时:把打孔组件(A)向机器前侧移动。(⇨)
2. 拧紧螺丝(1)。
3. 进行测试复印。(手送托盘供纸)
4. 重复步骤 1 ～ 3,直至打孔的孔的位置达到标准值。
<基准值(d)>
公制规格:d=40.0㎜±2㎜, e=80.0㎜±0.5㎜(e:不可调整)
英制规格:d=34.93㎜±2㎜(1.38"±0.08"),
e=69.85㎜±0.5㎜(2.75"±0.02")(e:不可调整)
※ 跳至 P8 的步骤 26。
※ 纸盒供纸时,如果中心位置发生偏移,请实施下页的调整。

펀치위치 센터조정
펀치유니트 A 의 위치를 조정하세요. (수동급지대)
1. 펀치구멍의 위치가 기기 앞측으로 벗어난 경우:펀치유니트 A 를 기기의 뒤쪽으로 밀어주세요.(⬅)
펀치구멍의 위치가 기기 뒷측으로 벗어난 경우:펀치유니트 A 를 기기의 앞쪽으로 당겨주세요.(⇨)
2. 나사 (1) 를 다시 조입니다.
3. 테스트 카피를 합니다. (수동급지대)
4. 펀치 구멍 위치가 기준 이내가 될 때까지 1 단계 ~ 3 단계를 반복 수행합니다.
<기준치 (d) >
센티사양:d=40.0mm±2mm, e=80.0mm±0.5mm (e: 조정 불가)
인치사양:d=34.93mm±2mm(1.38"±0.08"), e=69.85mm±0.5mm(2.75"±0.02") (e: 조정 불가)
※ P8 의 순서 26 로 진행.
※ 카세트 급지시 센터 라인이 맞지 않는 경우에는 다음페이지를 참조하여 조정을 하세요.

パンチ位置センター調整
パンチユニット(A)の位置調整を行う。(手差しトレイ給紙)
1. パンチ穴が機械前側にずれている場合
パンチユニット(A)を機械後側(⬅)にずらす。
パンチ穴が機械後側にずれている場合
パンチユニット(A)を機械前側(⇨)にずらす。
2. ビス(1)を締め付ける。
3. テストコピーを行う。(手差しトレイ給紙)
4. パンチ穴の位置が基準値内になるまで、手順 1 ～ 3 を繰り返す。
<基準値(d)>
センチ仕様:d=40.0㎜±2㎜, e=80㎜±0.5㎜(e:調整不可)
インチ仕様:d=34.93㎜±2㎜(1.38"±0.08"),
e=69.85㎜±0.5㎜(2.75"±0.02")(e:調整不可)
※P8 の手順 26 へ進む。
※ カセット給紙でセンター位置がずれている場合は、次頁の調整をおこなう。

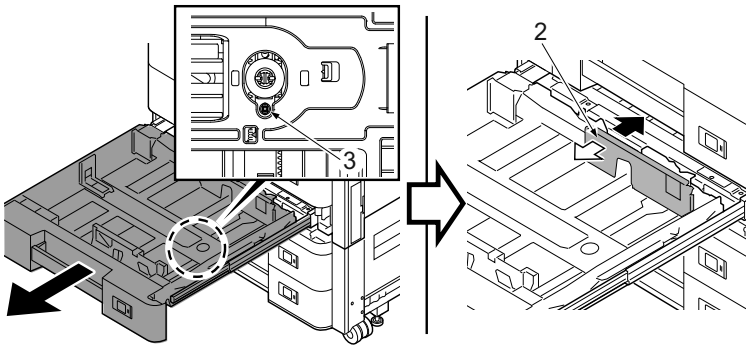

Centering the hole punch position(Adjusts the center line for each paper source.)
Adjust the center line for each paper source in reference to the punch unit center line adjusted in P12.
1. Loosen the screw (3).
2. If the punch hole is too close to the front of the machine:
   Shift the paper width guide (2) at the machine rear side to the machine rear side (⬅).
   If the punch hole is too close to the rear of the machine:
   Shift the paper width guide (2) at the machine rear side to the machine front side (⇨).
3. Retighten the screws (3).
4. Load paper in the cassette and align the paper width guide at the machine front and rear side to the paper width.
5. Perform a test copy.

Centrage de la position de perforation(Ajuste la ligne centrale pour chaque source de papier.)
Ajuster la ligne centrale pour chaque source de papier en référence à la ligne centrale de l'unité de perforation ajustée à la page 12.
1. Desserrer la vis (3).
2. Si la perforation est trop proche de l'avant de la machine:
   Décaler le guide de largeur de papier (2) à l'arrière de la machine vers l'arrière de la machine (⬅).
   Si la perforation est trop proche de l'arrière de la machine:
   Décaler le guide de largeur de papier (2) à l'arrière de la machine vers l'avant de la machine (⇨).
3. Resserrez les vis (3)
4. Charger le papier dans le magasin et aligner le guide de largeur de papier à l'avant et à l'arrière de la machine en fonction de la largeur du papier.
5. Effectuer une copie de tes

Centrado de la posición de perforación(Ajuste la línea central para cada origen de papel.)
Ajuste la línea central para cada origen de papel según el ajuste de la línea central de la unidad de perforación en la página 12.
1. Afloje el tornillo (3).
2. Si la perforación se encuentra demasiado cerca del frente de la máquina:
   Desplace la guía del ancho del papel (2) del reverso hacia la parte posterior de la máquina (⬅).
   Si la perforación se encuentra demasiado cerca de la parte trasera de la máquina:
   Desplace la guía del ancho del papel (2) del reverso hacia la parte anterior de la máquina (⇨).
3. Apriete de nuevo los tornillos (3).
4. Coloque el papel en el depósito y alinee la guía del ancho del reverso y del anverso a la anchura del papel.
5. Effectuer une copie de test.

Zentrieren der Stanzlochposition(Stellt den Einzug aus jeder Papierquelle mittig ein.)
Stellt den Einzug aus jeder Papierquelle in Bezug auf die Mittellinie der Locheinheit ein, die auf Seite 12 beschrieben ist.
1. Lösen Sie die Schraube (3).
2. Falls die Lochung zu nah an der Gerätefront liegt:
   Schieben Sie die hintere Breitenpapierführung (2) nach hinten zur Geräterückseite (⬅).
   Falls die Lochung zu weit weg von der Gerätefront liegt:
   Schieben Sie die vordere Breitenpapierführung (2) nach hinten zur Gerätevorderseite (⇨).
3. Ziehen Sie die Schrauben (3) wieder fest.
4. Befüllen Sie die Kassette mit Papier und richten Sie die beiden Breitenführungen so aus, dass diese am Papierrand anliegen.
5. Eine Testkopie erstellen.

Centratura della posizione dei fori di perforazione(Regola la linea centrale per ogni alimentazione carta.)
Regolare la linea centrale di ogni alimentazione carta facendo riferimento alla linea centrale dell'unità di foratura regolata a pagina 12.
1. Allentare la vite (3).
2. Se la posizione dei fori di perforazione è troppo vicina alla parte anteriore della macchina: Spostare la guida di larghezza carta (2) sul lato posteriore del sistema verso il retro del dispositivo (⬅).
   Se la posizione dei fori di perforazione è troppo vicina alla parte posteriore della macchina: Spostare la guida di larghezza carta (2) sul lato posteriore del sistema verso la parte frontale del dispositivo (⇨).
3. Stringere di nuovo le viti (3)
4. Caricare la carta nel cassetto e allineare la guida di larghezza carta che si trova sul lato anteriore e posteriore del sistema alla larghezza della carta.
5. Eseguire una copia di prov.

打孔位置中心调节 (调整各个供纸盒的中心位置。)
以 P12 中已调整的打孔组件的中心位置为基准，对各个供纸盒的中心位置进行调整。
1. 拧松螺丝 (3)。
2. 如果打孔的孔洞向机器前侧偏移时
   把机器后侧的纸张尺寸导板 (2) 向机器后侧 (⬅) 移动。
   如果打孔的孔洞向机器后侧偏移时
   把机器后侧的纸张尺寸导板 (2) 向机器后侧 (⇨) 移动。
3. 拧紧螺丝 (3)。
4. 把纸张放入纸盒，根据纸张的尺寸来调整机器前后的纸张尺寸导板的位置。
5. 进行测试复印。

펀치위치 센터조정 (각 급지대 별로 조정합니다 .)
12 페이지의 펀치유니트 센터 라인을 기준으로하여 각 급지대 별로 센터 라인을 조정합니다 .
1. 나사 (3) 을 풉니다 .
2. 기기 후면의 용지 폭 가이드 (2) 를 기기 후면 (<-) 으로 밉니다 .(⬅)
   기기 후면의 용지 폭 가이드 (2) 를 기기 전면 (<-) 으로 밉니다 .(⇨)
3. 나사 (3) 를 다시 조입니다 .
4. 용지를 카세트에 넣고 기기 전면과 후면의 용지 폭 가이드를 용지 폭에 맞게 조정합니다 .
5. 테스트 카피를 합니다

パンチ位置センター調整 (各給紙段のセンター調整をおこなう。)
P12 で調整したパンチユニットのセンター位置を基準にして、各給紙段のセンター位置を調整する。
1. ビス (3) を緩める。
2. パンチ穴が機械前側にずれている場合
   機械後側の用紙幅ガイド (2) を機械後側(⬅)にずらす。
   パンチ穴が機械後側にずれている場合
   機械後側の用紙幅ガイド (2) を機械前側(⇨)にずらす。
3. ビス (3) を締め付ける。
4. 用紙をカセットにセットし、機械前後の用紙幅ガイドの位置を用紙幅にあわせて調整する。
5. テストコピーを行う。

6. Repeat the steps 1 to 5 until the hole punch position is within the reference.(For reference values, see page 12.)
7. Execute maintenance mode U034 [LSU Out Left/Center Line] and adjust the center line.(For details, see the instructions on Page 15 to Page 16.)

---

6. Répéter les étapes 1 à 5 jusqu'à ce que la position de perforation soit dans la référence.(Pour les valeurs de référence, voir page 12.)
7. Exécuter le mode maintenance U034 [LSU Out Left/Center Line] et ajuster la ligne centrale.(Pour plus de précision, se reporter aux instructions de la page 15 à la page 16.)

---

6. Repita los pasos del 1 al 5 hasta que la posición de perforación de los agujeros esté dentro de los valores de referencia.(Consulte la página 12 para los valores de referencia).
7. Ejecute el modo de mantenimiento U034 [LSU Out Left/Center Line] y ajuste la línea central.(Consulte las instrucciones en las páginas 15 y 16 para más detalle.)

---

6. Wiederholen Sie die Schritte 1 bis 5 solange, bis die Lochposition sich innerhalb der Referenz befindet.(Referenzwerte finden Sie auf Seite 12.)
7. Führen Sie im Wartungsmodus U034 [LSU Out Left/Center Line] aus und justieren Sie die Mittellinie.(Weitere Informationen siehe Seite 15 bis 16.)

---

6. Ripetere i punti da 1 a 5 fino a portare la posizione di foratura all'interno del riferimento.(Per i valori di riferimento, vedere a pagina 12.)
7. Eseguire la modalità di manutenzione U034 [LSU Out Left/Center Line] e regolare la linea centrale.(Per i dettagli, vedere le istruzioni a pagina 15 e 16.)

---

6. 重复步骤 1 ～ 5，直至打孔的孔的位置达到标准值。(基准值，请参照 P12。)
7. 实施维修保养模式 U034 的 [LSU Out Left/Center Line]，进行中心线的调整。(详细步骤，请参见 P15-16。)

---

6. 펀치 구멍 위치가 기준 이내가 될 때까지 1 단계 ~ 5 단계를 반복 수행합니다 .(12 페이지의 값 참조 .)
7. 메인터넌스 모드 U034[LSU Out Left/Center Line] 를 실행하여 센터라인을 조정합니다 .(자세한 내용은 15~16 페이지를 참조하세요 .)

---

6. パンチ穴の位置が基準値内になるまで、手順 1 ～ 5 を繰り返す。(基準値は、12 ページ参照)
7. メンテナンスモード U034 の [LSU Out Left/Center Line] を実行し、センターラインを調整する。(詳細は、15 ～ 16 ページ参照)

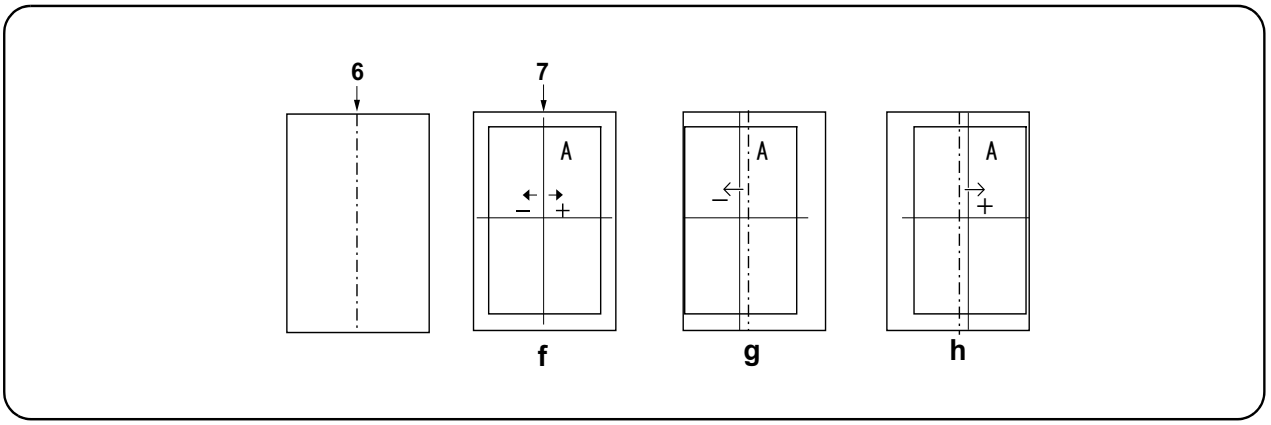

Adjusting the center line

1. Check the gap between the paper center (6) and the line (7) of test pattern (f). If the gap exceeds the reference value, adjust the gap according to the following procedure.
   <Reference value> within ±0.5mm.
2. Set the maintenance mode U034 and select [LSU Out Left/Center Line] > [Cassette1/Cass1] ,[Cassette2/Cass2],[Cassette3/Cass3]or [Cassette4/Cass4].

Réglage de l'axe

1. Vérifier l'espace entre le centre du papier (6) et la ligne (7) du motif de (f). Si l'écart excède la valeur de référence, le régler selon la procédure suivante.
   <Valeur de référence> ±0,5mm max.
2. Passez en mode maintenance U034 et sélectionnez [LSU Out Left/Center Line] > [Cassette1/Cass1],[Cassette2/Cass2],[Cassette3/Cass3] ou [Cassette4/Cass4].

Ajuste de la línea central

1. Compruebe el espacio entre el centro del papel (6) y la línea (7) del patrón de prueba (f). Si la separación supera el valor de referencia, ajústela siguiendo este procedimiento.
   <Valor de referencia> Dentro de ±0,5mm.
2. Configure el modo de mantenimiento U034 y seleccione [LSU Out Lef/Center Linet] > [Cassette1/Cass1],[Cassette2/Cass2] ,[Cassette3/Cass3] o [Cassette4/Cass4].

Einstellen der Mittenlinie

1. Überprüfen Sie den Abstand zwischen der Papiermitte (6) und der Linie (7) auf der Testseite (f). Wenn der Abstand größer als der Bezugswert ist, den Abstand mit dem folgenden Verfahren einstellen.
   <Bezugswert> Innerhalb ±0,5mm.
2. Aktivieren Sie den Wartungsmodus U034 und wählen Sie [LSU Out Left/Center Line] > [Cassette1/Cass1],[Cassette2/Cass2],[Cassette3/Cass3] oder [Cassette4/Cass4].

Regolazione della linea centrale

1. Controllare lo spazio tra il centro del foglio (6) e la linea (7) dello schema di prova (f). Se lo scostamento supera il valore di riferimento, regolare lo scostamento stesso seguendo questa procedura.
   <Valore di riferimento> Entro ±0,5mm.
2. Impostare la modalità manutenzione U034 e selezionare [LSU Out Left/Center Line] > [Cassette1/Cass1],[Cassette2/Cass2],[Cassette3/Cass3] o [Cassette4/Cass4].

中心线调节

1. 确认纸张的中心（3）和测试样张（d）的线（4）之间的偏移值。如果偏移值超过标准值，则按照下列步骤进行调整。
   〈标准值〉 ±0.5mm 以内
2. 进入维修保养模式 U034，把[LSU Out Left/Center Line] > [Cassette1/Cass1],[Cassette2/Cass2],[Cassette3/Cass3]或[Cassette4/Cass4]。

센터라인 조정

1. 용지 중앙 (6) 과 테스트 패턴 (f) 의 라인 (7) 사이의 격차를 확인하십시오 . 차이가 기준치 외의 경우 다음의 순서대로 조정을 합니다 .
   < 기준치 > ±0.5mm 이내
2. 메인터넌스 모드 U034 를 설정하고 [LSU Out Left/Center Line] > [Cassette1/Cass1],[Cassette2/Cass2],[Cassette3/Cass3] 또는 [Cassette4/Cass4] 을 선택합니다 .

センターライン調整

1. 紙のセンター(6) とテストパターン (f) の線 (7) のずれを確認する。ずれが基準値外の場合、次の手順で調整をおこなう。
   ＜基準値＞ ±0.5mm 以内
2. メンテナンスモード U034 をセットし、[LSU Out Left/Center Line] > [Cassette1/Cass1],[Cassette2/Cass2],[Cassette3/Cass3] または [Cassette4/Cass4] を選択する。

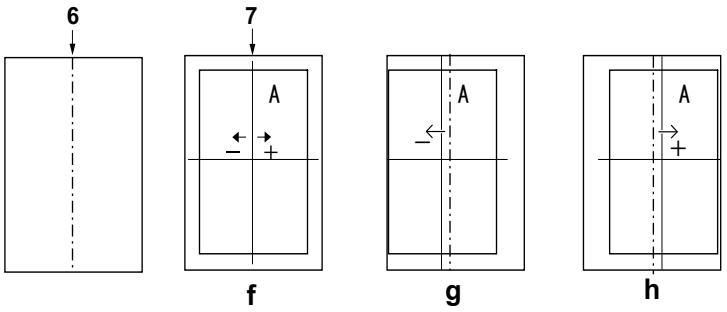

3.Adjust the values.
Test pattern (g) : Increase the setting value.
Test pattern (h) : Decrease the setting value.
Amount of change per step: 0.1mm
4.Press the [Start] key to confirm the setting value.
5.Print the test pattern.

6.Repeat the steps 2 to 5 above until the gap of line (7) in test pattern (f) is within the reference.
<Reference value> within ±0.5mm.

3.Régler les valeurs.
Mire d' essai (g) : Augmentez la valeur de réglage.
Mire d' essai (h) : Diminuez la valeur de réglage.
Changement par graduation d'échelle: 0,1mm
4.Appuyer sur la touche de [Départ] pour confirmer la valeur de réglage.
5.Imprimez le motif de test.

6.Répéter les étapes 2 à 5 ci-dessus jusqu'à ce que l'espace de la ligne (7) dans le motif de test (f) soit dans la référence.
<Valeur de référence> ±0,5mm max.

3.Ajuste los valores.
Patrón de prueba (g) : Aumente el valor de configuración.
Patrón de prueba (h) : Reduzca el valor de configuración.
Magnitud del cambio por incremento: 0,1mm
4.Pulse la tecla de [Inicio] para confirmar el valor de configuración.
5.Imprima el patrón de prueba.

6.Repita los pasos del 2 al 5 anteriores hasta que el espacio de línea (7) del patrón de prueba (f) esté dentro de los valores de referencia.
<Valor de referencia> dentro de ±0,5mm.

3.Die Werte einstellen.
Testmuster (g) : Den Einstellwert erhöhen.
Testmuster (h) : Den Einstellwert verringern.
Änderung pro Schritt: 0,1mm
4.Den Einstellwert durch Drücken der [Start]-Taste bestätigen.
5.Drucken Sie die Testseite aus.

6.Wiederholen Sie die Schritte 2 bis 5 solange, bis der Abstand der Linie (7) auf der Testseite (f) sich innerhalb der Referenz befindet.
<Bezugswert> Innerhalb ±0,5mm.

3.Regolare i valori.
Modello di prova (g) : Aumentare il valore dell'impostazione.
Modello di prova (h) : Diminuire il valore dell'impostazione.
Entità modifica per passo: 0,1mm
4.Premere il tasto di [Avvio] per confermare il valore dell'impostazione.
5.Stampare lo schema di prova.

6.Ripetere i punti da 2 a 5 sopra indicati fino a portare lo spazio della linea (7) nello schema di prova (f) all'interno del riferimento.
<Valore di riferimento> entro ±0,5mm

---

3. 调整设定值。
测试图案 (g)：调高设定值。
测试图案 (h)：调低设定值。
设定值的一个调整单位变化量：0.1mm
4. 按 [开始] 键，以确定设定值。
5. 打印测试图案。

6. 重复步骤 2 ～ 5，直至测试样张 (d) 的线 (7) 的偏移值达到标准值以内。
< 标准值 >±0.5mm 以内

---

3. 설정치를 조정합니다 .
테트스 패턴 (g):설정치를 높입니다 .
테트스 패턴 (h):설정치를 내립니다 .
1 스텝당 변화량:0.1mm
4. [복사 / 시작] 키를 누르고 설정치를 확인합니다 .
5. 시험 패턴을 인쇄합니다 .

6. 테스트 패턴 (f) 에서 라인 (7) 의 격차가 기준이내가 될 때까지 2 단계 ~ 5 단계를 반복 수행합니다 .
< 기준치 > ±0.5mm 이내

---

3. 設定値を調整する。
テストパターン (g) ：設定値を上げる。
テストパターン (h) ：設定値を下げる。
1 ステップ当たりの変化量:0.1mm
4. [スタート] キーを押し、設定値を確定する。
5. テストパターンを出力する。

6. テストパターン (f) の線 (7) のずれが基準値内になるまで手順 2 ～ 5 を繰り返す。
< 基準値 >±0.5mm 以内



2020. 4
303RF5671101

Printing System 15
Printing System 16
Printing System 17

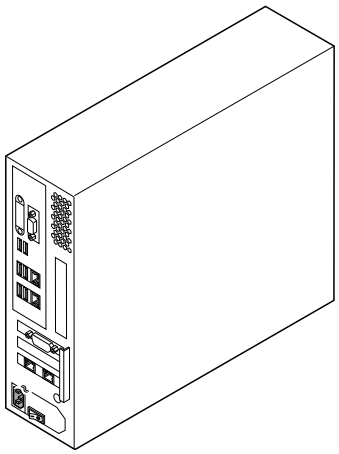

INSTALLATION GUIDE

GUIDE D'INSTALLATION

GUÍA DE INSTALACION

INSTALLATIONSANLEITUNG

GUIDA ALL'INSTALLAZIONE

安装手册

설치안내서

設置手順書

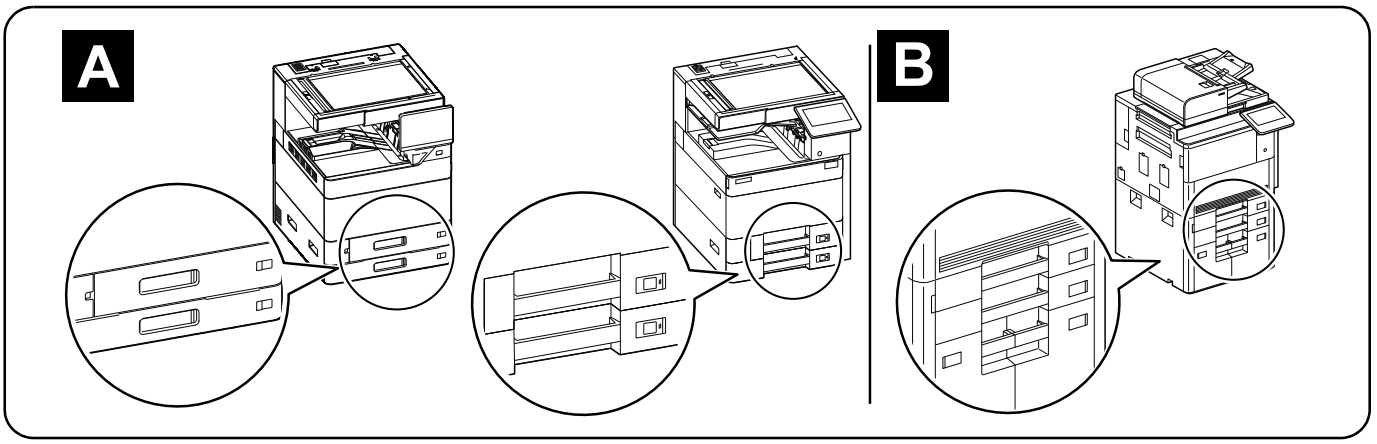

(EN) A different procedure is required depending on the product which is installed with this unit.Each procedure is described in the following pages.
For installation with a MFP(A), see Page 1 to Page 9.
For installation with a MFP(B), see Page 10 to Page 13.

(FR) Une procédure différente est requise selon le produit qui est installé avec cette unité.Chaque procédure est décrite dans les pages suivantes.
Pour l'installation avec une imprimante multifonction(A), voir Page 1 à Page 9.
Pour l'installation avec une imprimante multifonction(B), voir Page 10 à Page 13.

(ES) El procedimiento es diferente según el producto que se instale con esta unidad.En las siguientes páginas, se describe cada procedimiento.
Para la instalación con un MFP(A), consulte las páginas de la 1 a la 9.
Para la instalación con un MFP(B), consulte las páginas de la 10 a la 13.

(DE) Je nach verwendetem Modell ist eine andere Vorgehensweise zur Installation dieses Teils erforderlich.Die unterschiedlichen Vorgehensweisen werden auf den folgenden Seiten erläutert.
Bei Installation an einem MFP(A) siehe Seiten 1 bis 9.
Bei Installation an einem MFP(B) siehe Seiten 10 bis 13.

(IT) Si richiede una procedura diversa in funzione del prodotto su cui è installata l'unità.Le singole procedure sono descritte nelle pagine seguenti.
Per l'installazione con un MFP(A), vedere le pagine da 1 a 9.
Per l'installazione con un MFP(B), vedere le pagine da 10 a 13.

(ZHCN) 根据安装对象，安装步骤略有不同。各个步骤记载在下面的页面。
安装到 MFP(A) 上时，请参见 P1-P9。
安装到 MFP(B) 上时，请参见 P10-P13。

(KO) 이 장치에 설치되는 제품에 따라 절차가 다릅니다 . 다음 페이지에서 각 절차를 설명합니다 .
MFP(A) 에 설치하는 경우 1 페이지 ~9 페이지를 참조하십시오 .
MFP(B) 에 설치하는 경우 10 페이지 ~13 페이지를 참조하십시오 .

(JA) 装着する対象によって、取付手順は異なります。それぞれ、以下のページに記載しています。
MFP(A) に設置する場合;1 ページ～ 9 ページ
MFP(B) に設置する場合;10 ページ～ 13 ページ

Printing System 15 / Printing System 17

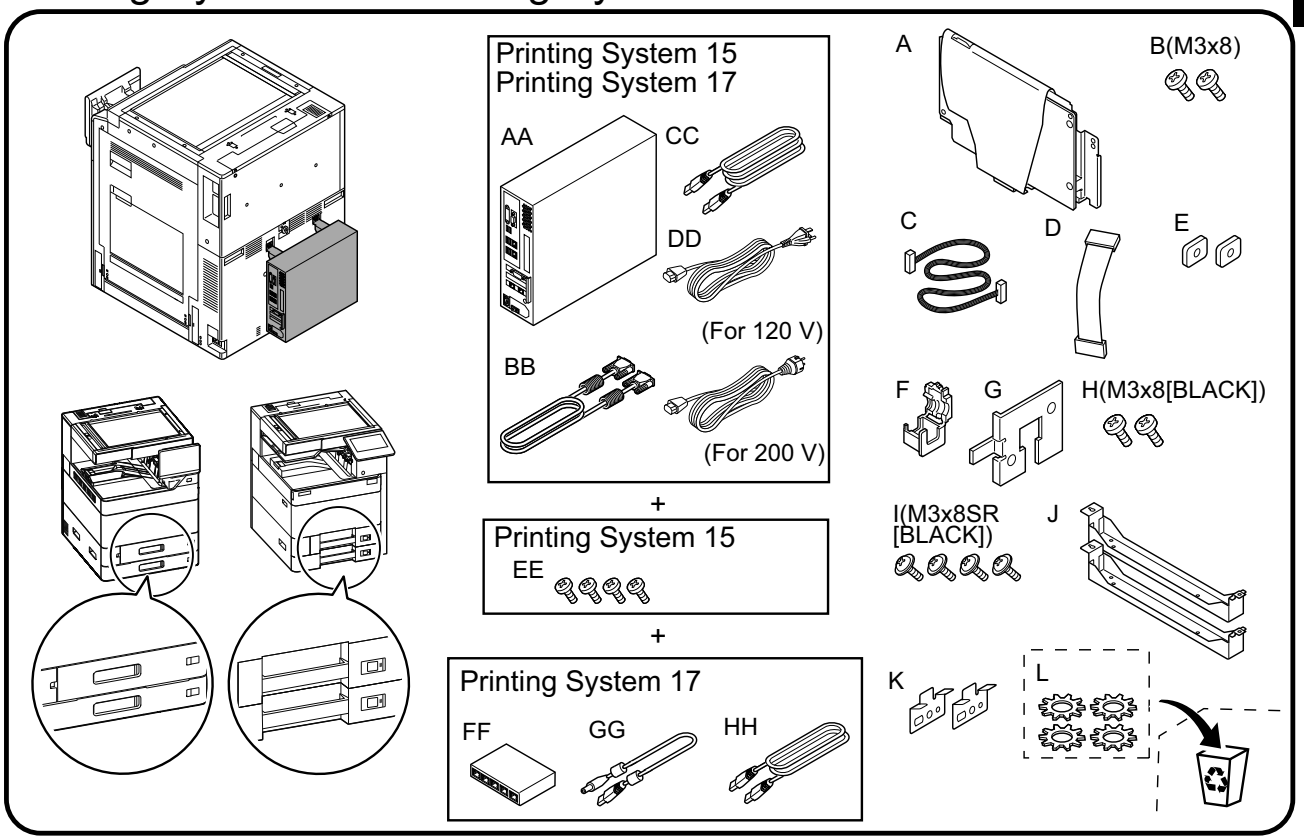

①

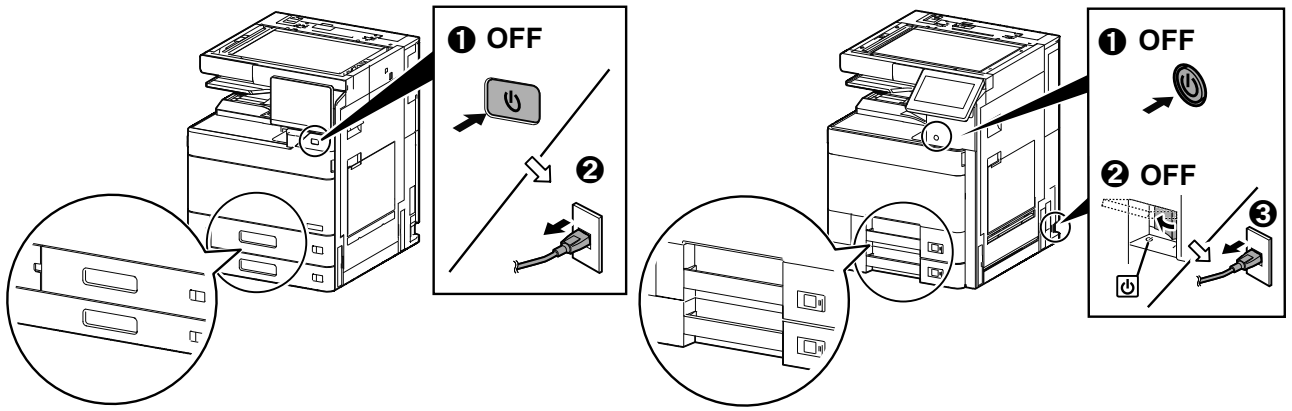

②

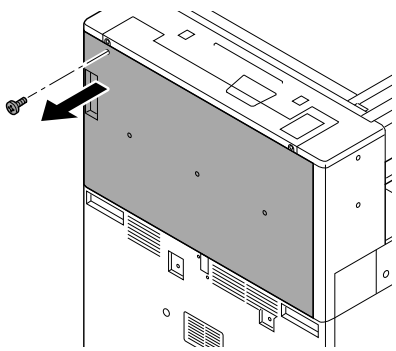

③

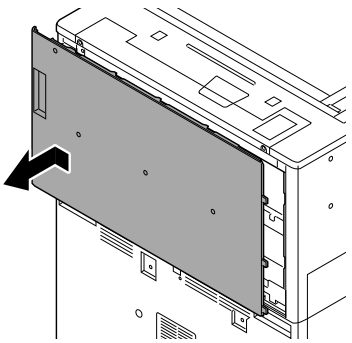

④

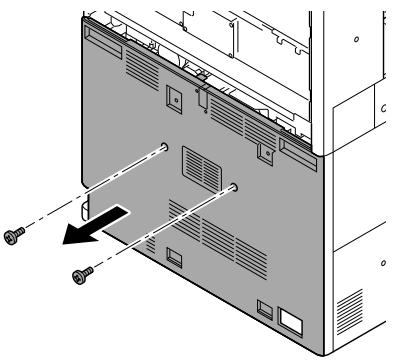

A

⑤

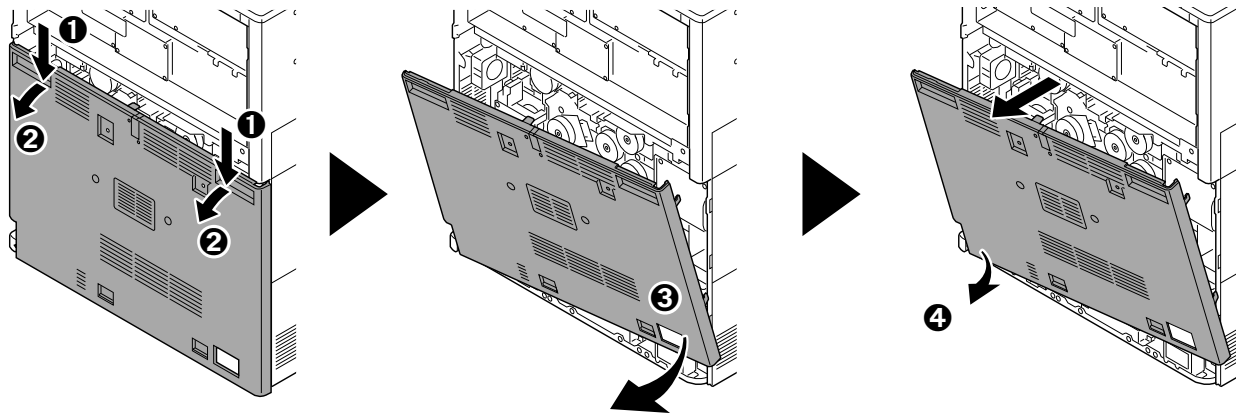

⑥

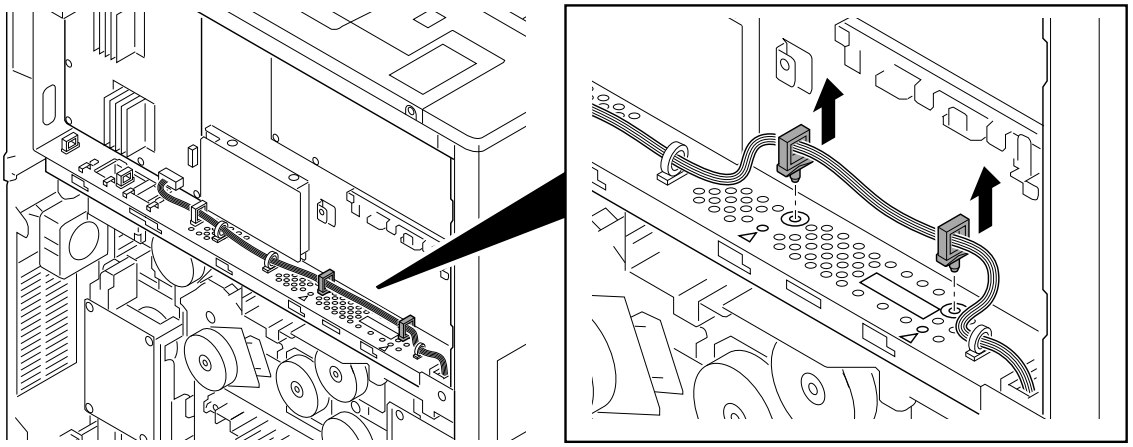

!

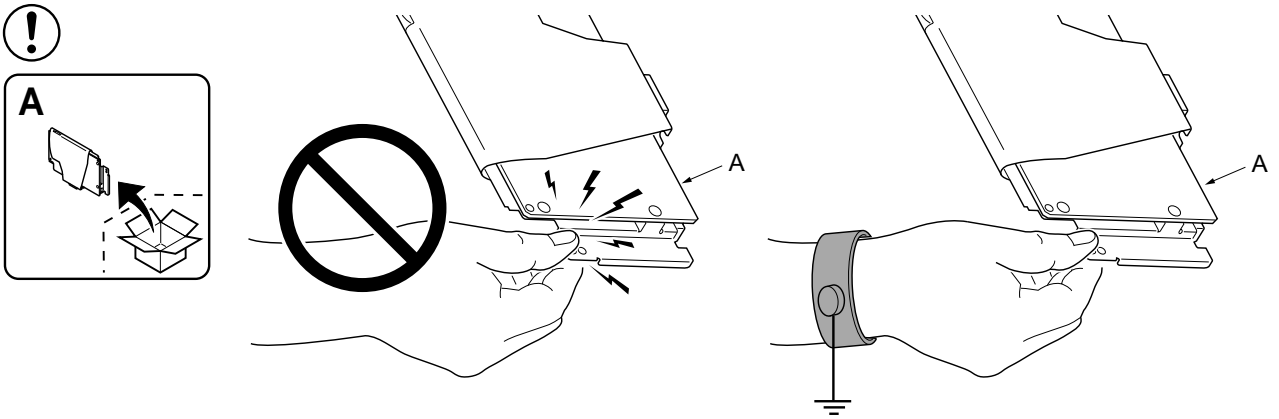

⑦

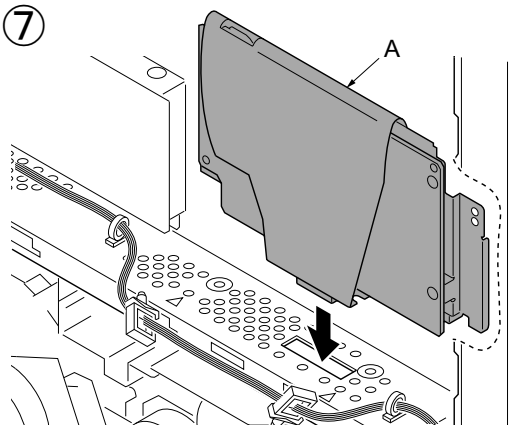

⑧

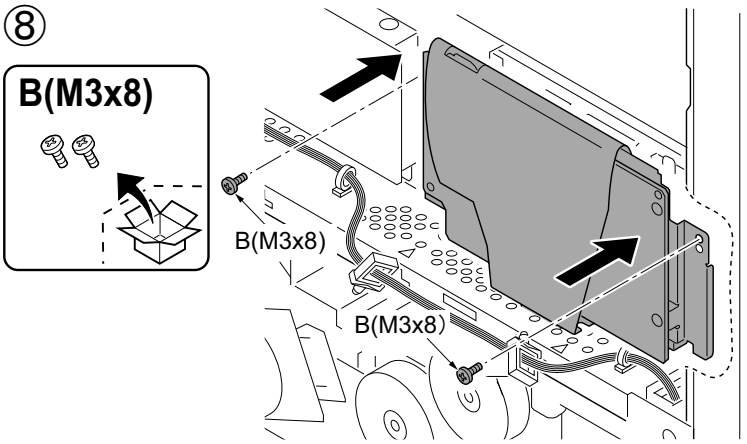

A

⑨

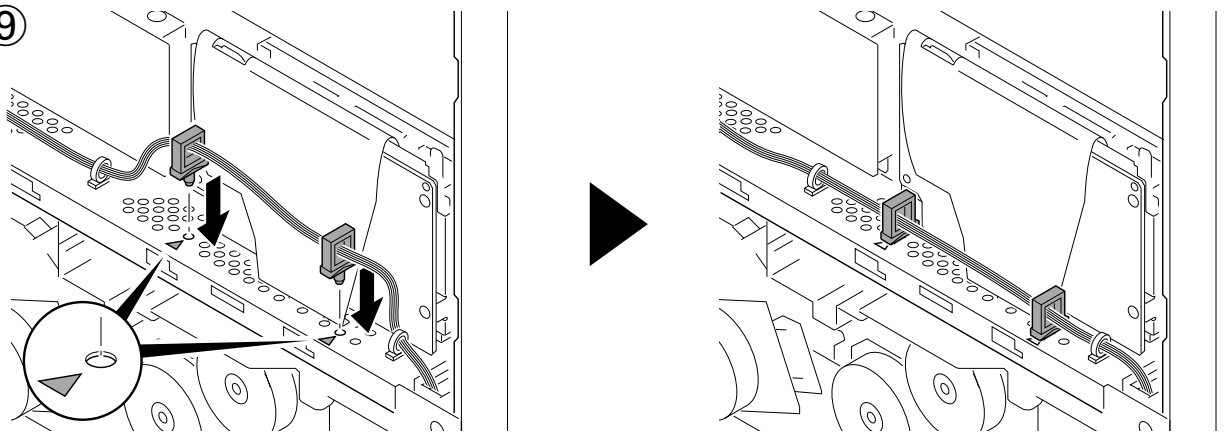

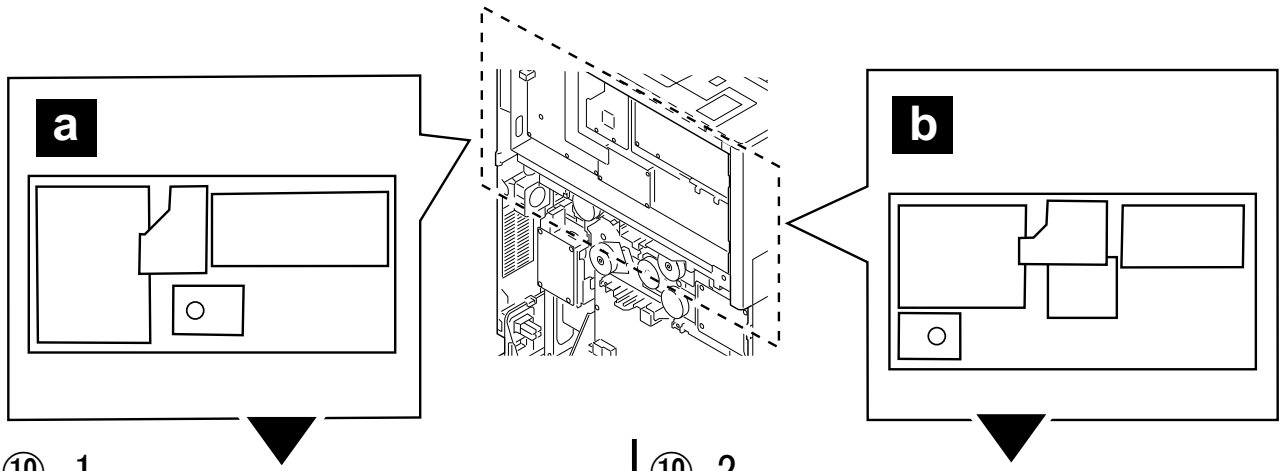

⑩-1

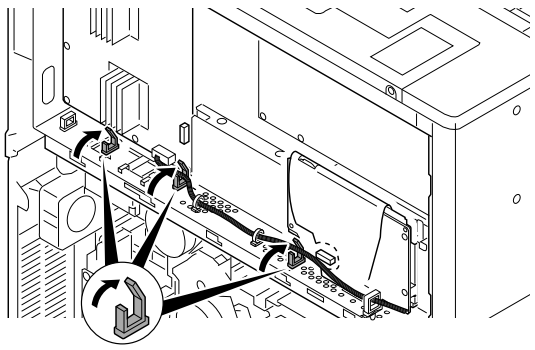

⑩-2

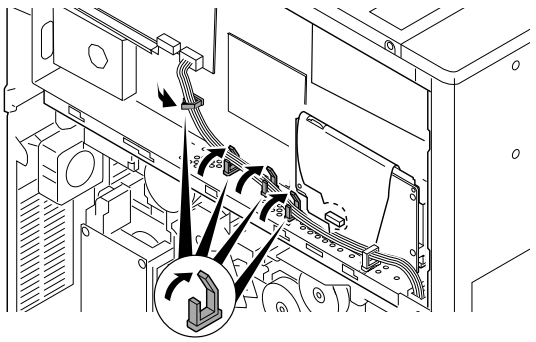

⑪-1

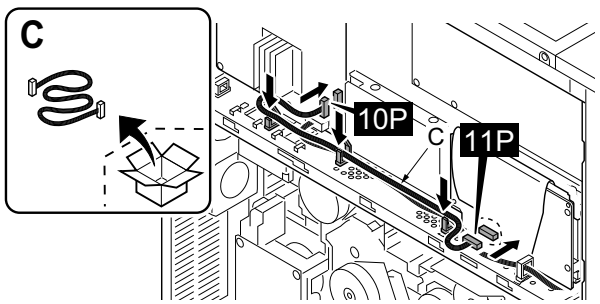

⑫-1

⑪-2

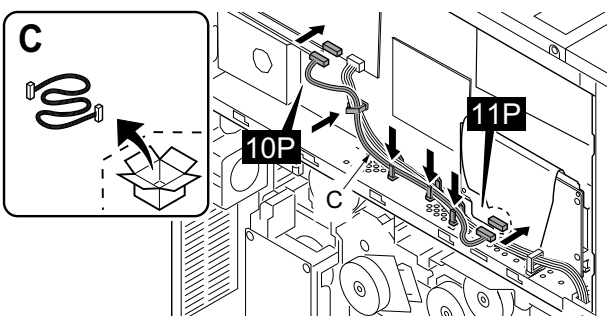

⑫-2

A

a

⑫−1

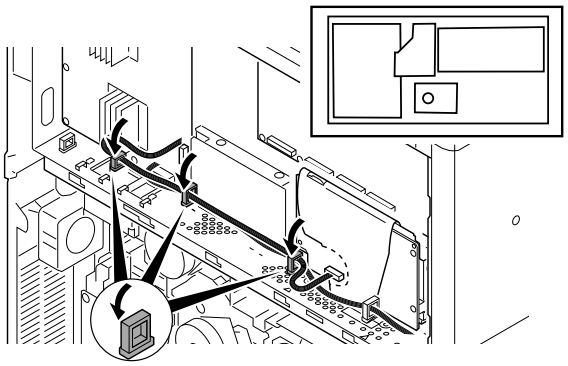

⑬−1

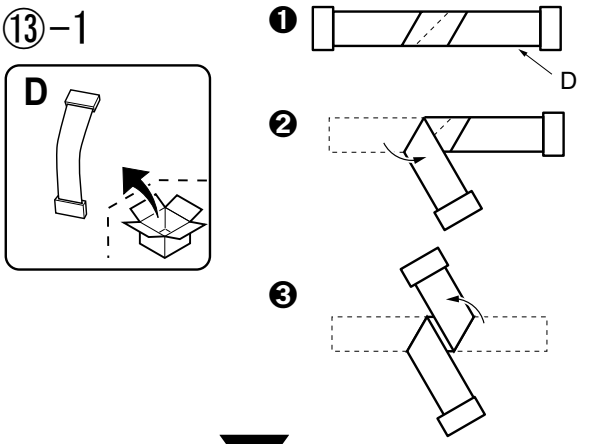

⑭−1

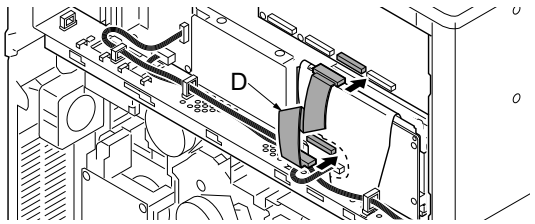

⑮

b

⑫−2

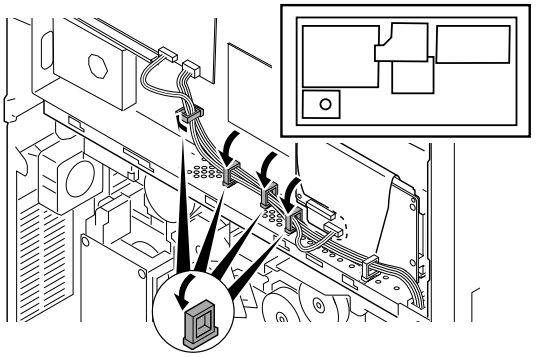

⑬−2

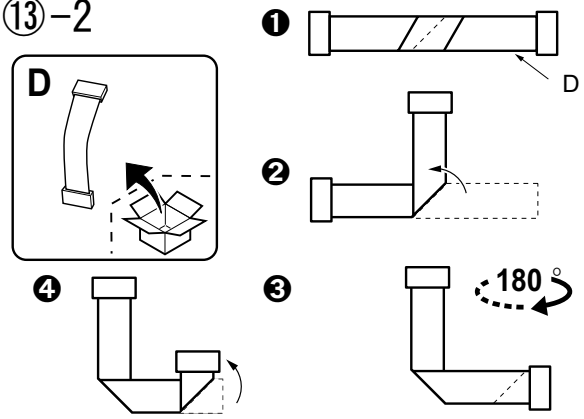

⑭−2

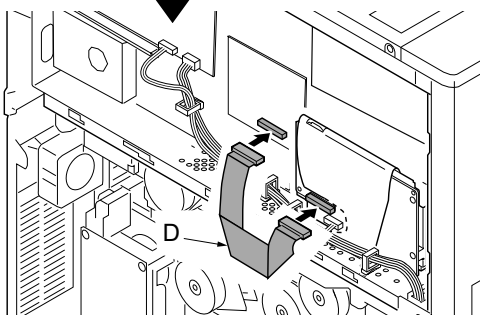

⑮

⑮

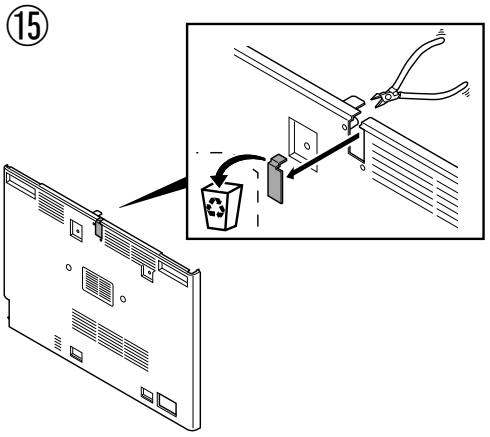

⑯

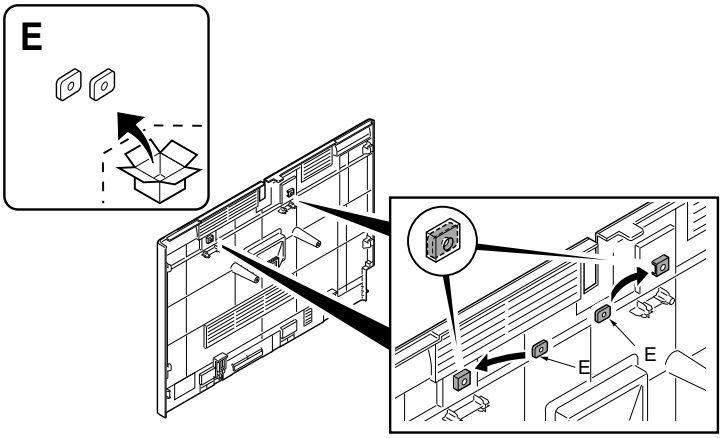

⑰

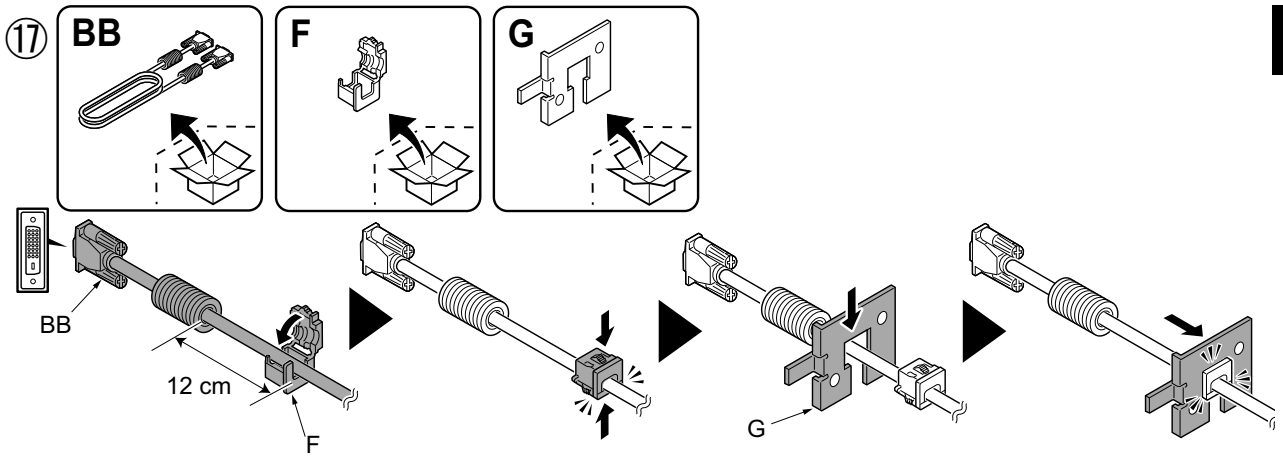

⑱

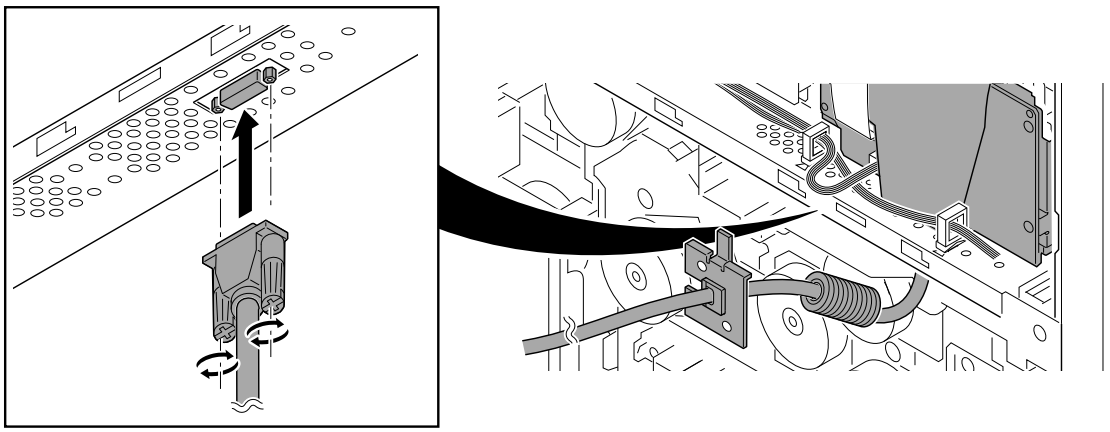

⑲

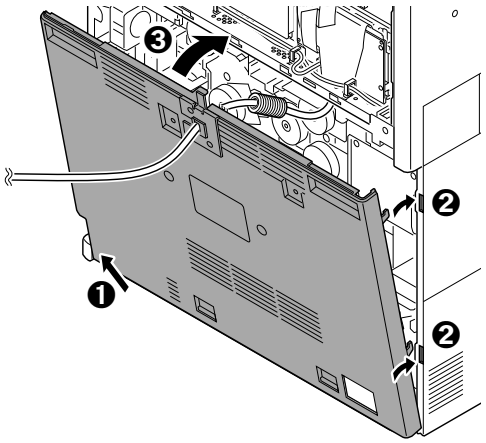

⑳

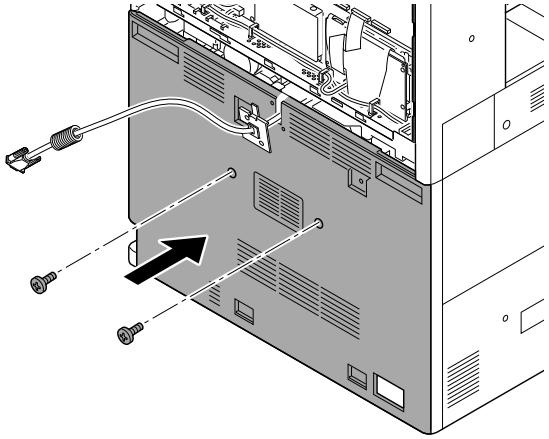

㉑

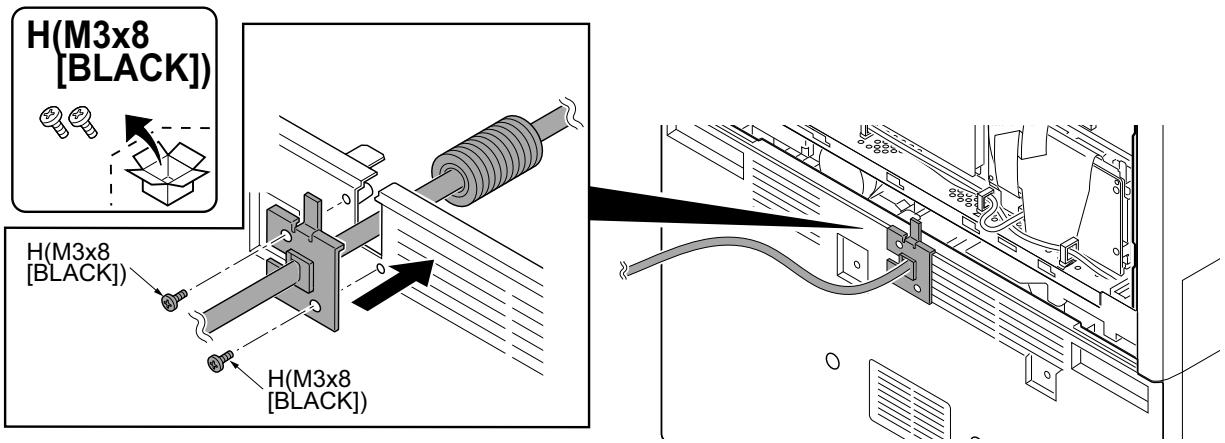

A

㉒

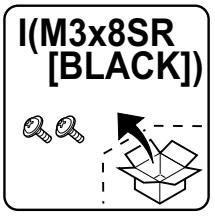

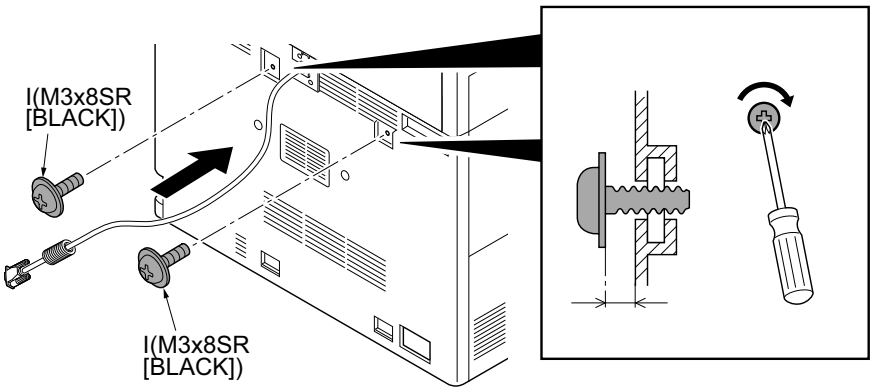

㉓

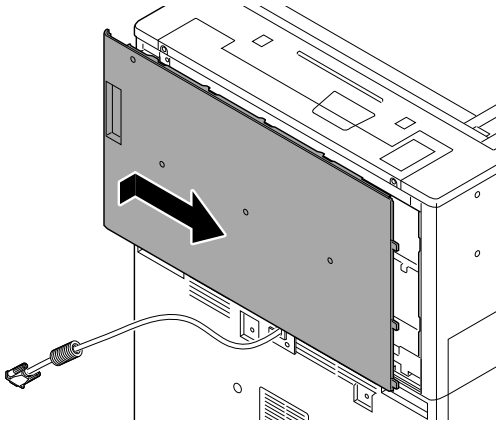

㉔

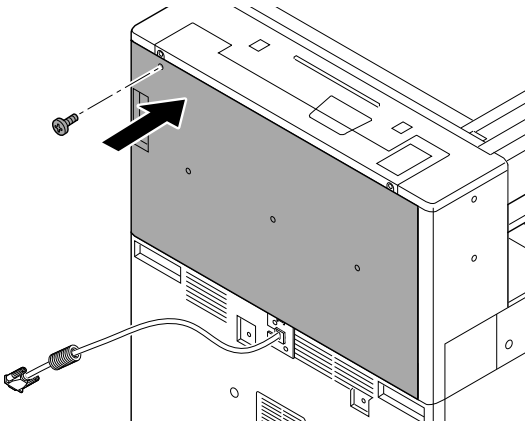

Printing System 15 ⇨ ㉕−1

Printing System 17 ⇨ ㉕−2

㉕−1

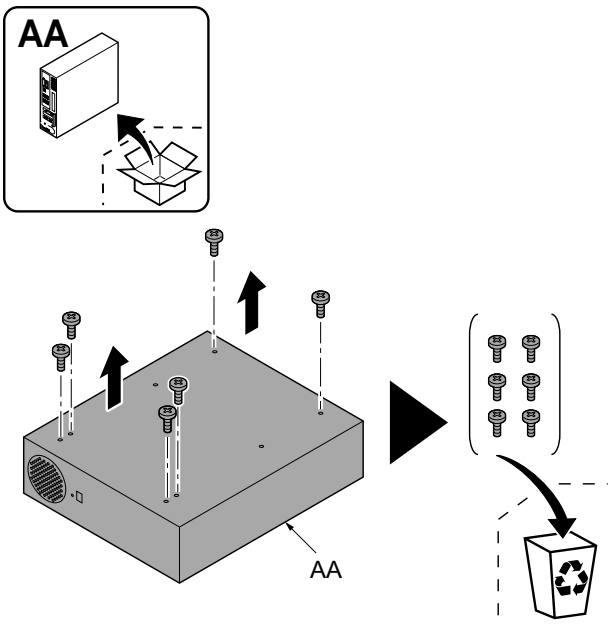

㉕−2

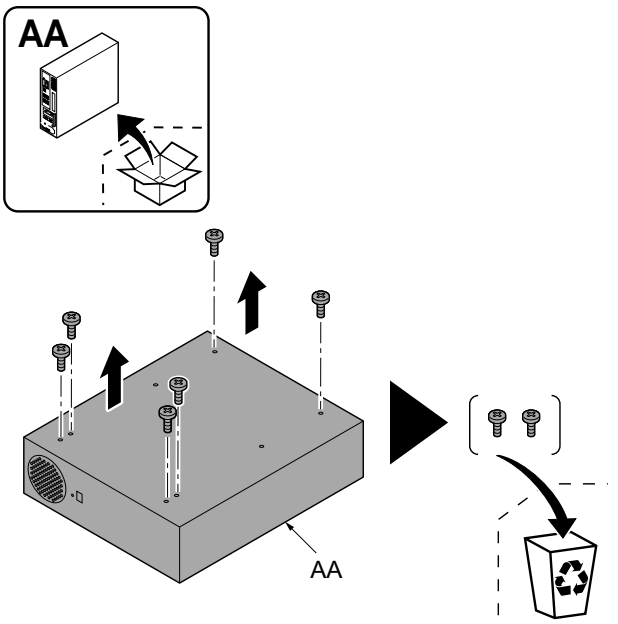

A

Printing System 15

㉖ −1

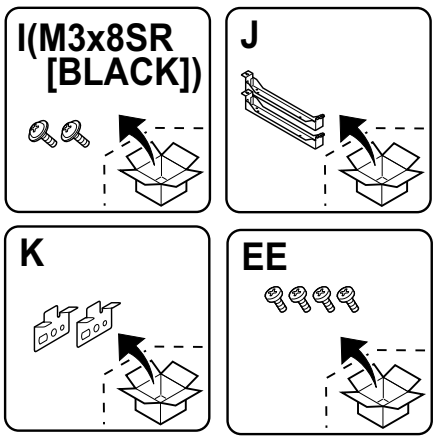

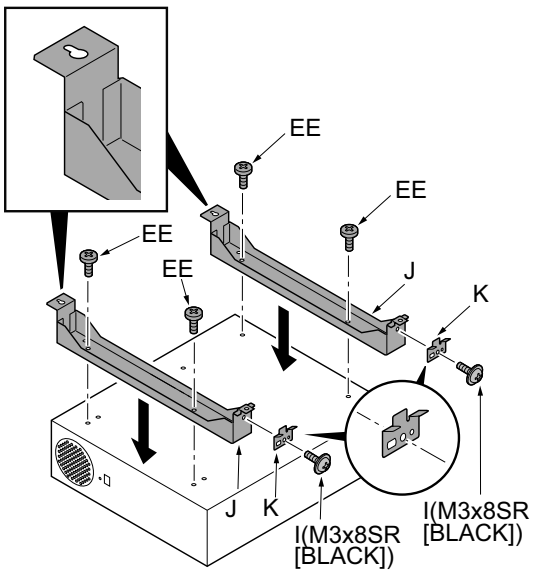

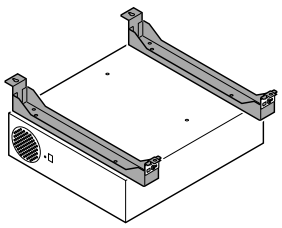

⇨ ㉗

Printing System 17

㉖ −2

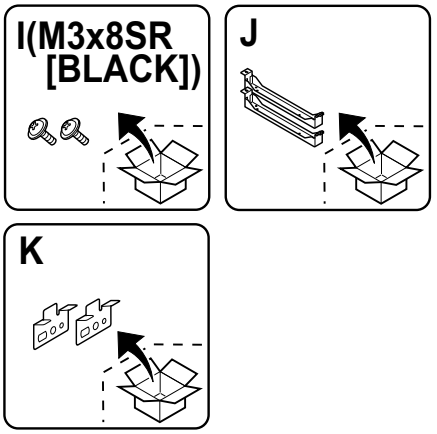

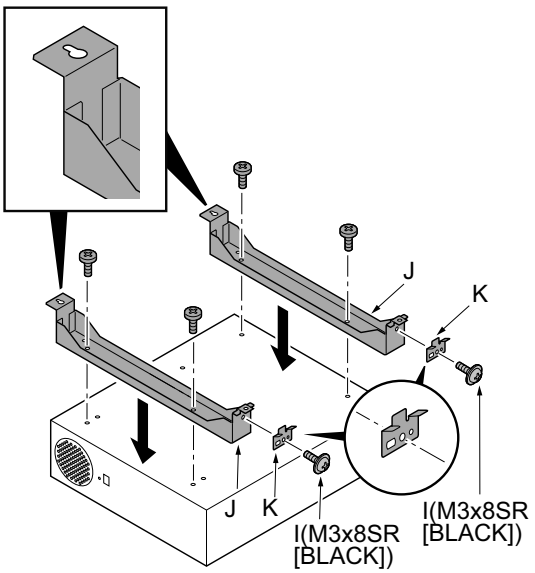

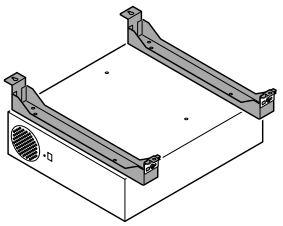

⇨ ㉗

㉗

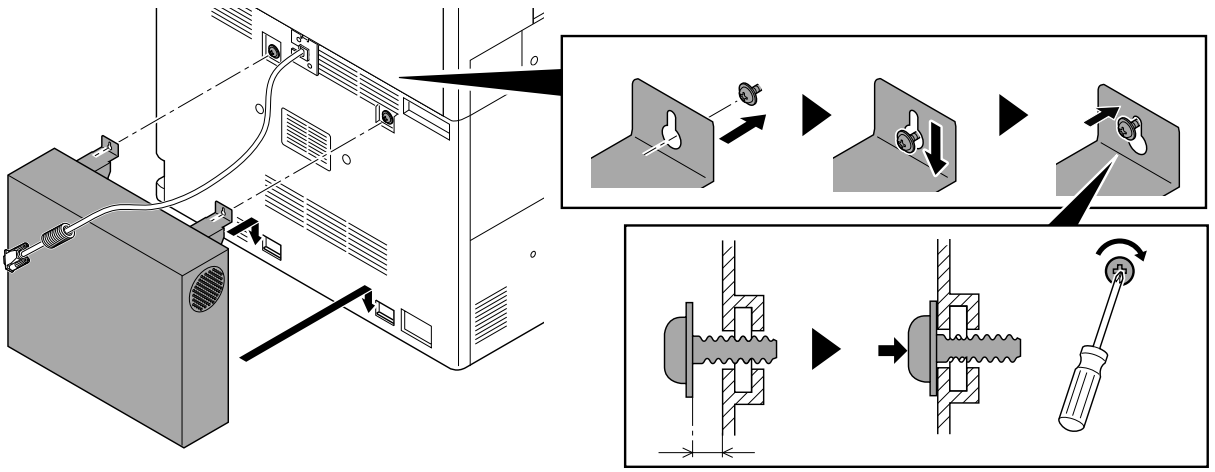

A

㉘

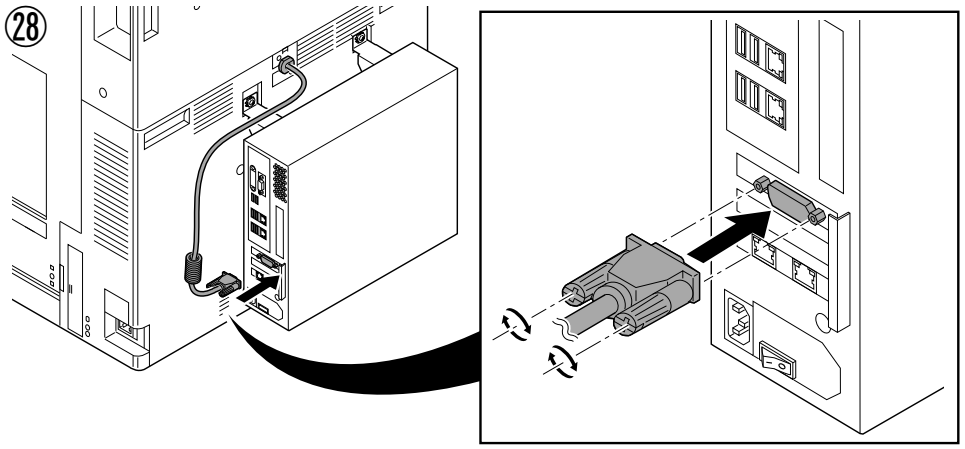

Printing System 15 ⇨ ㉙−1

Printing System 17 ⇨ ㉙−2

㉙−1

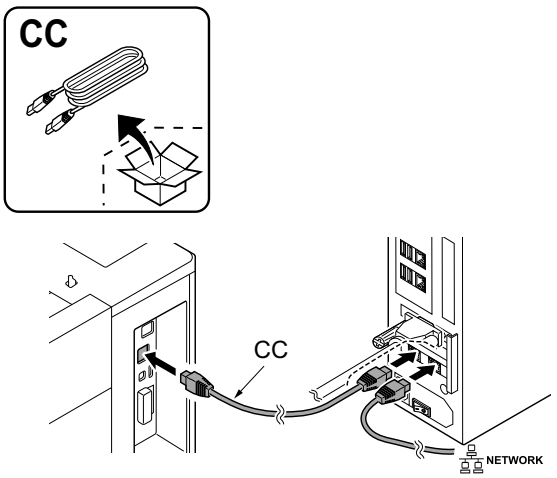

㉙−2

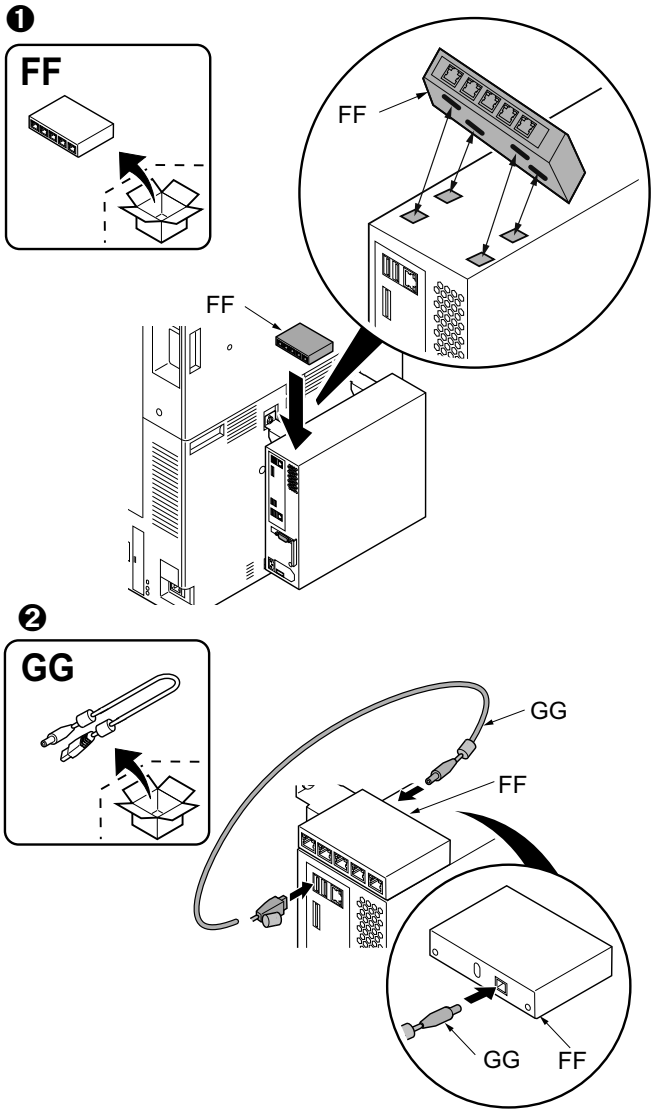

A

Printing System 15

㉚-1

❶

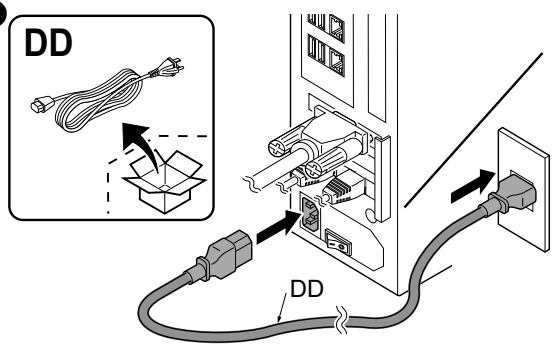

❷

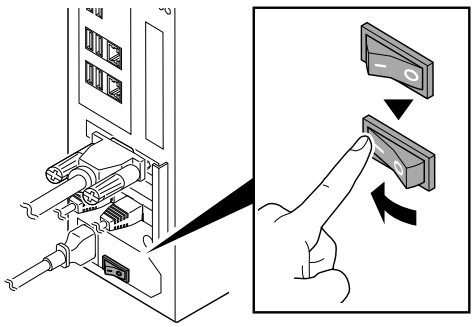

⇨ ㉛

Printing System 17

❸

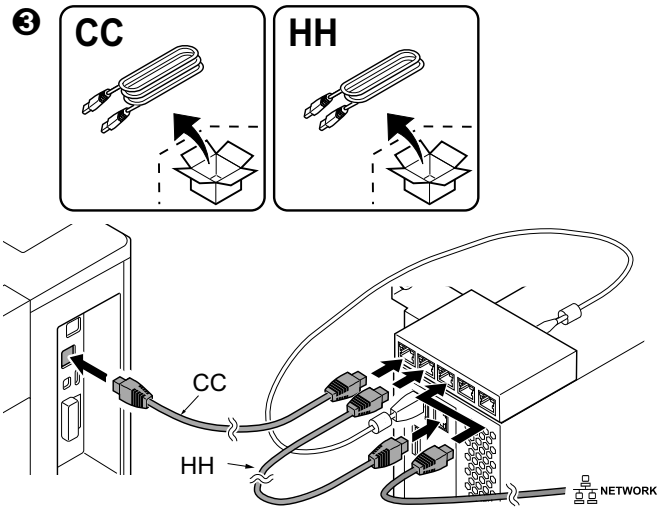

㉚-2

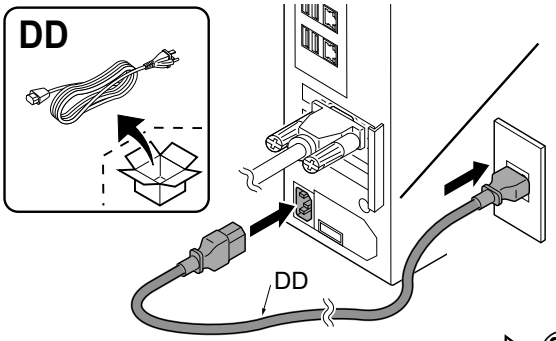

⇨ ㉛

㉛

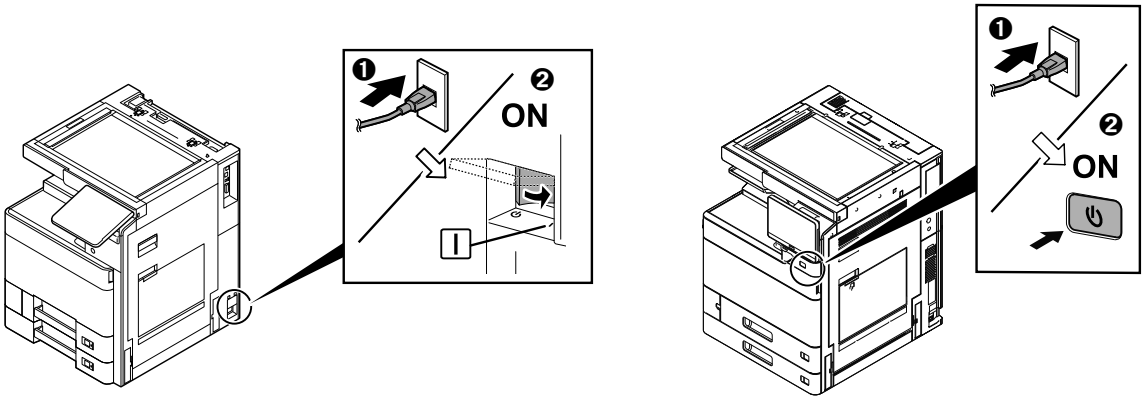

Printing System 16

B

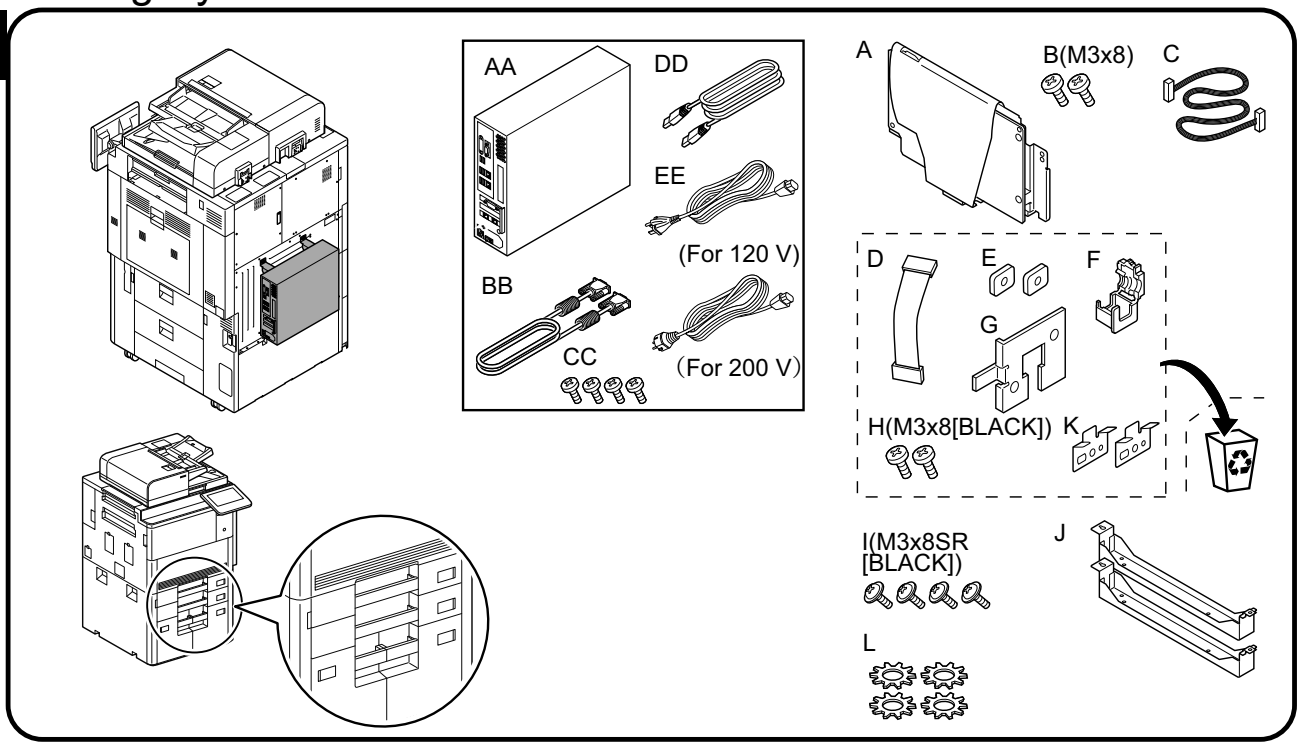

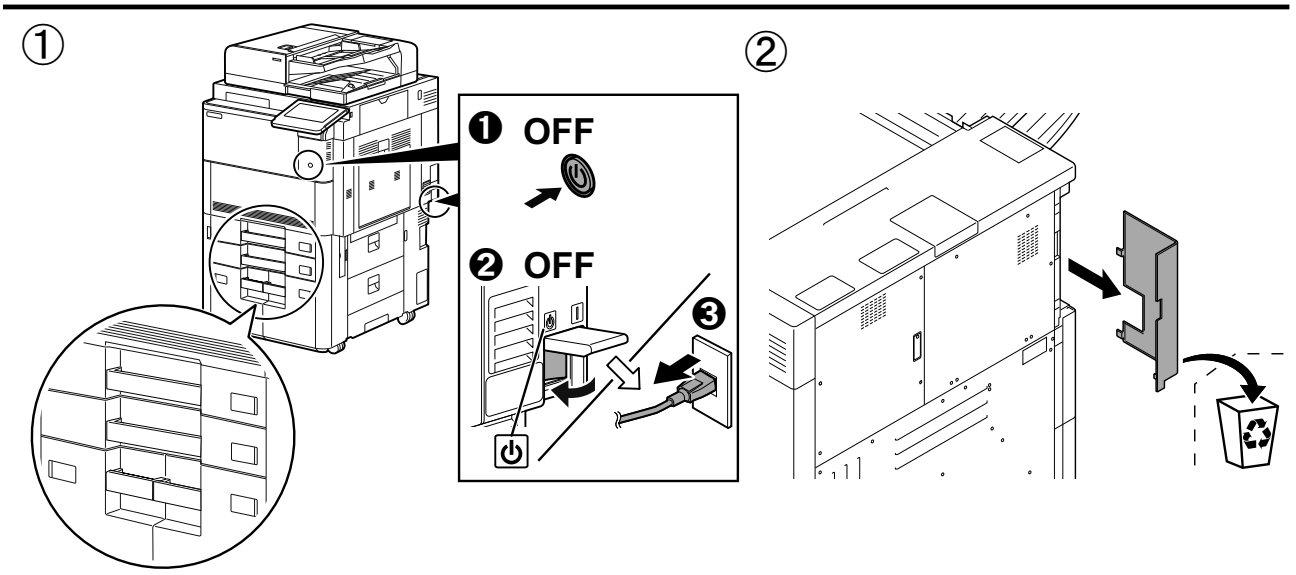

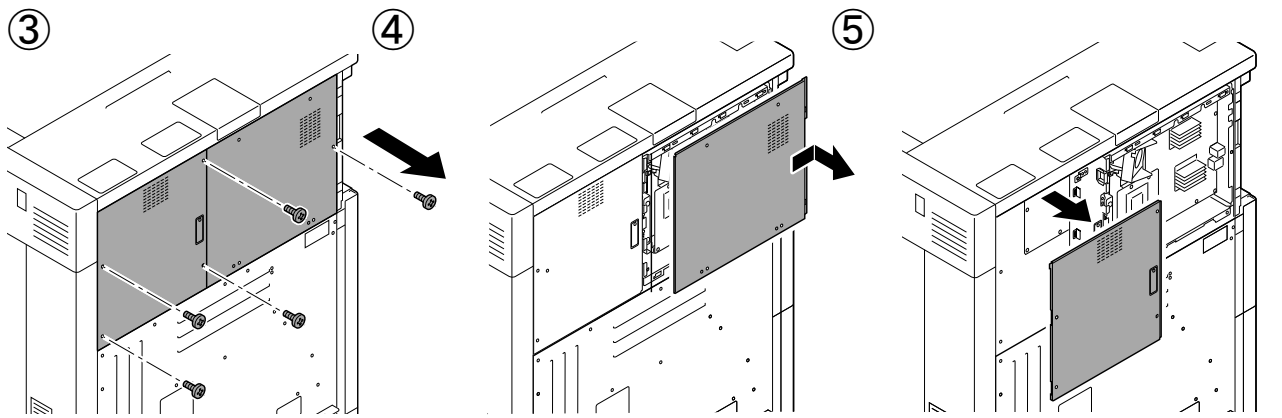

B

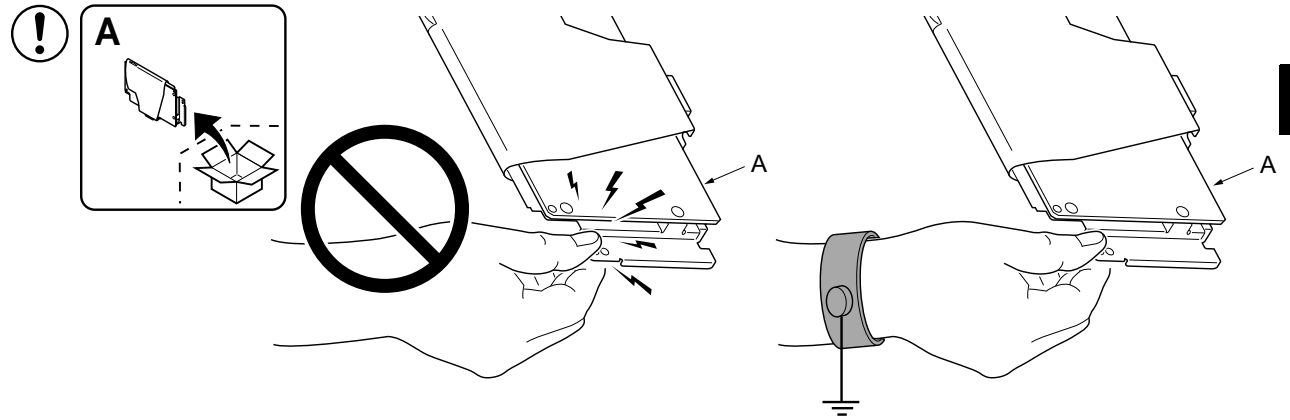

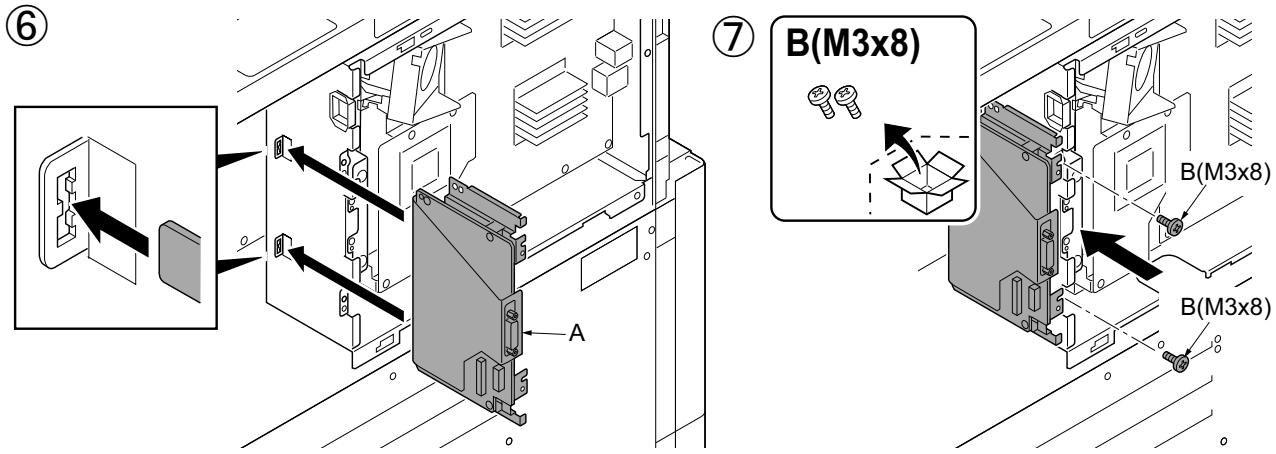

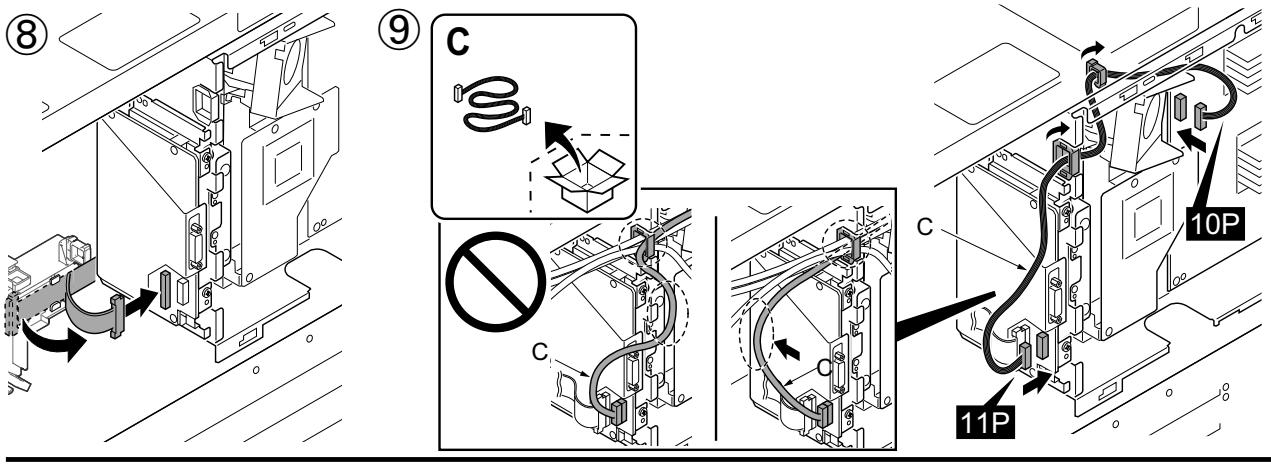

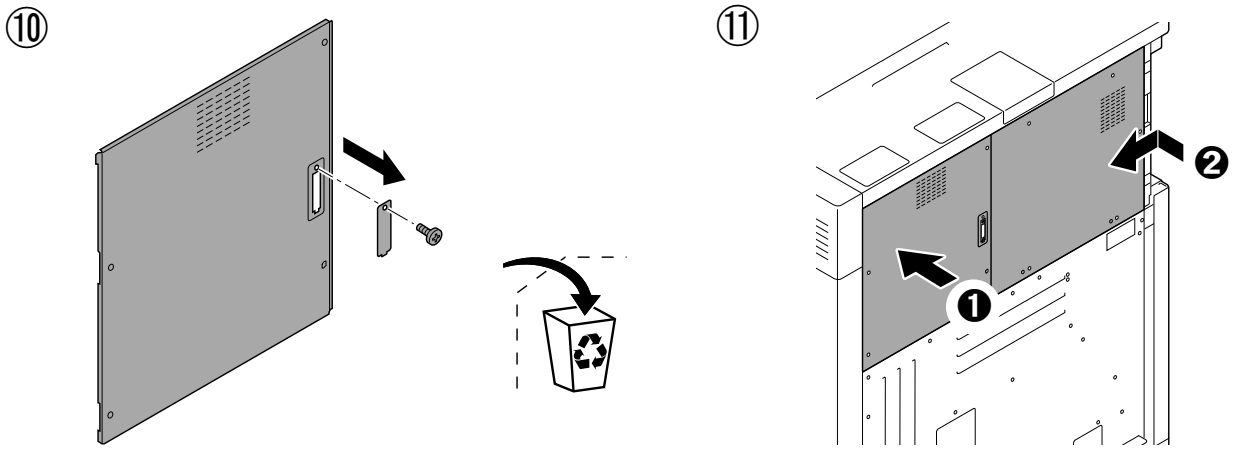

B

⑫

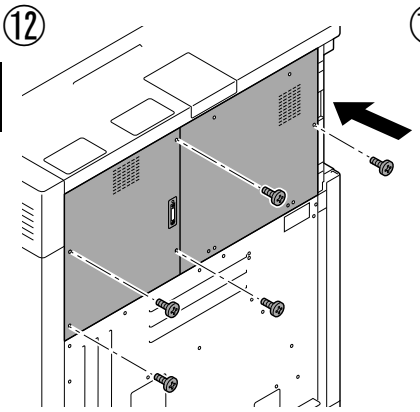

⑬

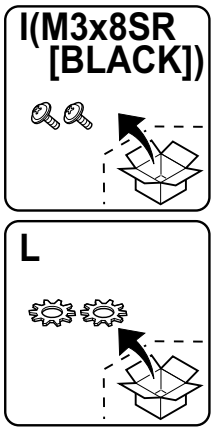
I(M3x8SR [BLACK])
L

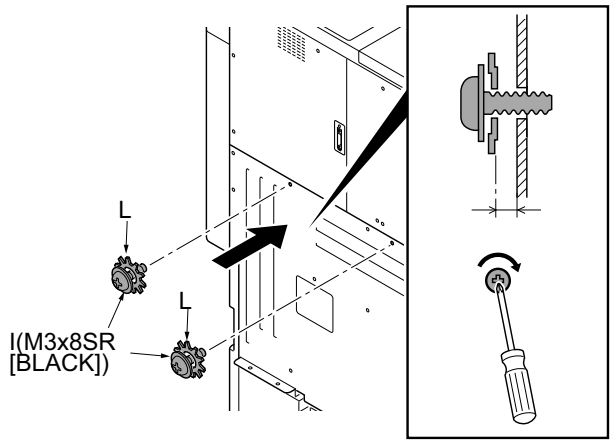
L
L
I(M3x8SR [BLACK])

⑭

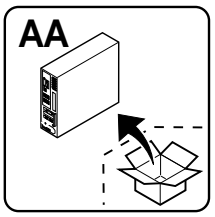
AA

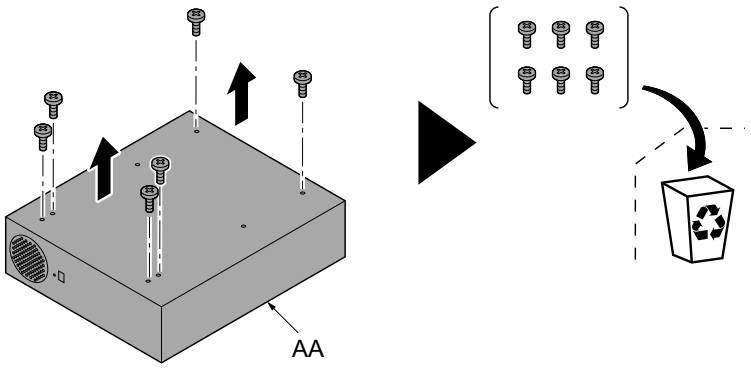
AA

⑮

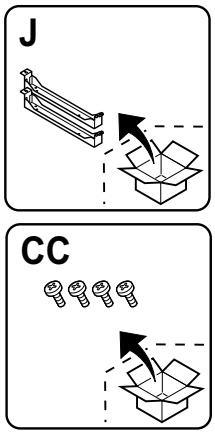
J
CC

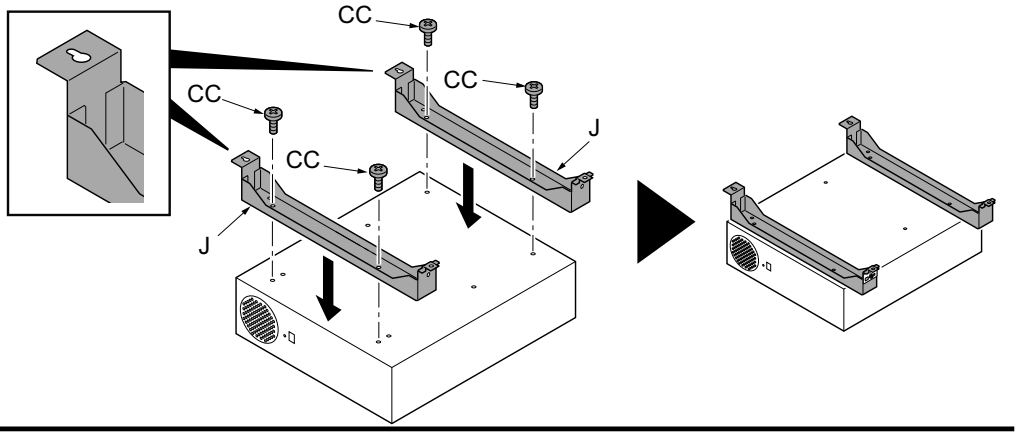
CC
CC
CC
CC
J
J

⑯

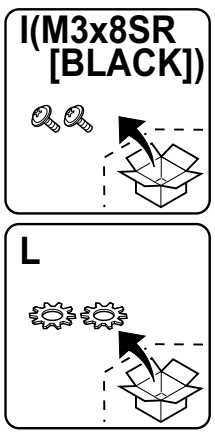
I(M3x8SR [BLACK])
L

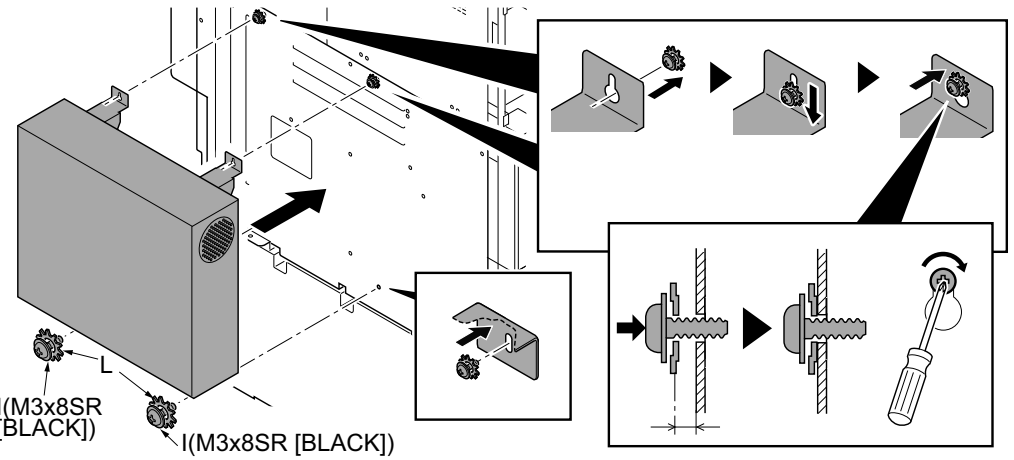
L
I(M3x8SR [BLACK])
I(M3x8SR [BLACK])

B

⑰

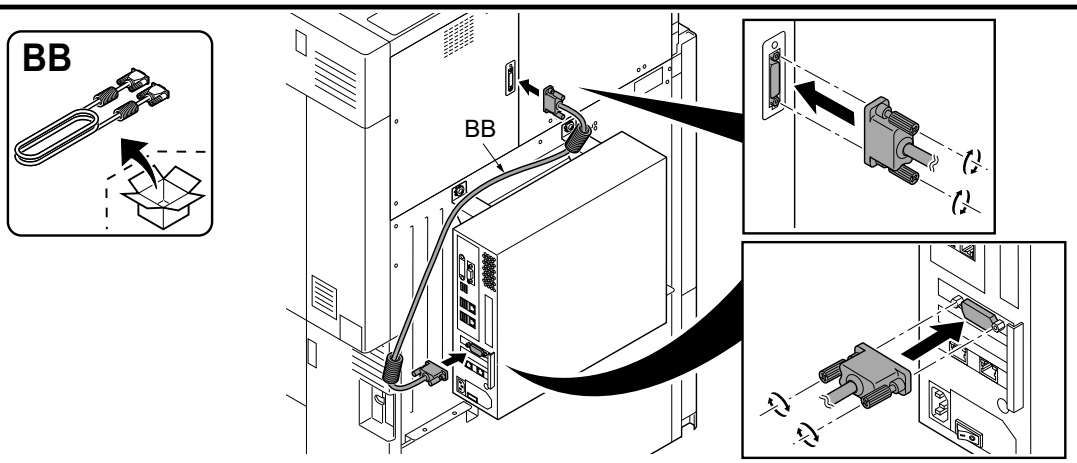

⑱

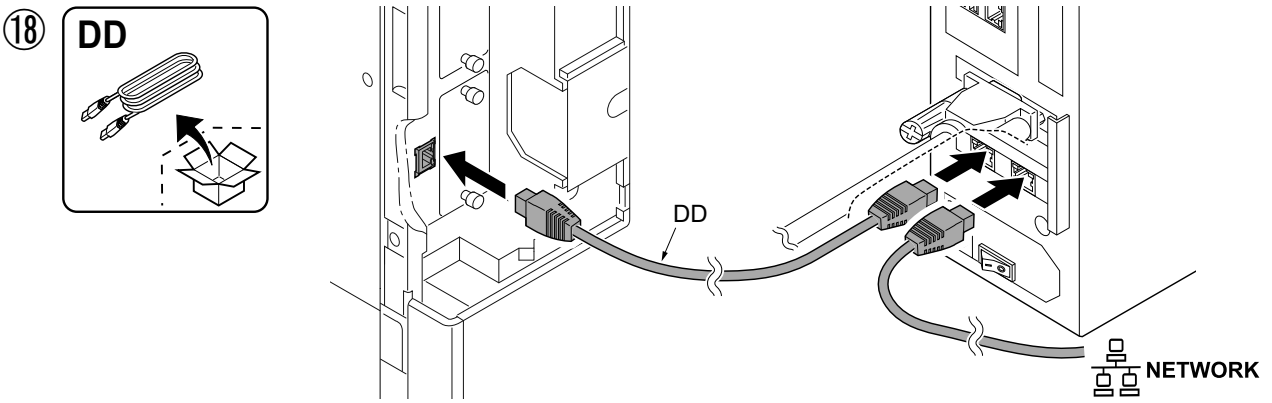

⑲

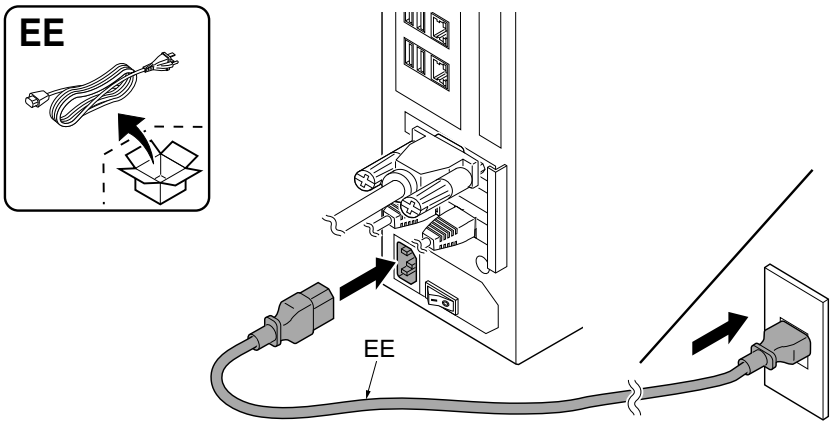

⑳

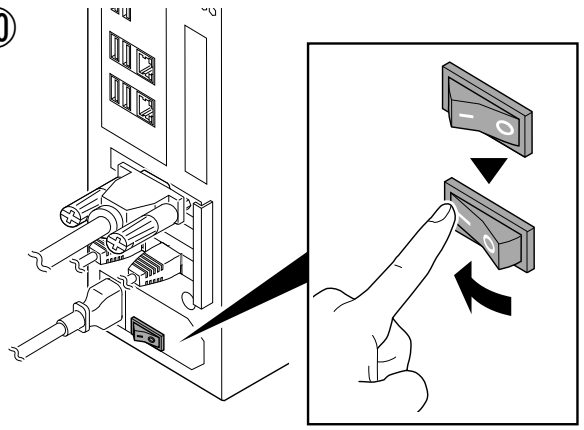

㉑

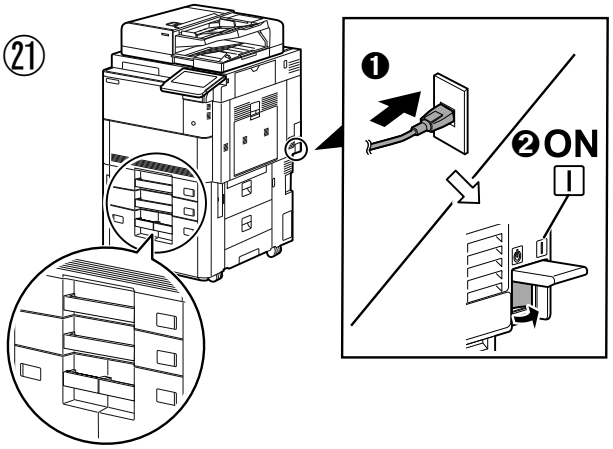



2021. 1
303RY5671201

KYOCERA Document Solutions America, Inc.
Headquarters
225 Sand Road, Fairfield, New Jersey 07004-0008, U.S.A.
Phone: +1-973-808-8444
Fax: +1-973-882-6000

Latin America
8240 NW 52nd Terrace, Suite 301
Miami, Florida 33166, U.S.A.
Phone: +1-305-421-6640

KYOCERA Document Solutions
Canada, Ltd.
6120 Kestrel Rd., Mississauga, ON L5T 1S8, Canada
Phone: +1-905-670-4425
Fax: +1-905-670-8116

KYOCERA Document Solutions
Mexico, S.A. de C.V.
Calle Arquimedes No. 130, 4 Piso, Colonia Polanco
Chapultepec, Delegacion Miguel Hidalgo, Ciudad de
Mexico, C.P.11560, Mexico
Phone: +52-555-383-2741
Fax: +52-555-383-7804

KYOCERA Document Solutions
Brazil, Ltda.
Alameda África, 545, Pólo Empresarial Consbrás,
Tamboré, Santana de Parnaíba-SP, CEP 06543-306,
Brazil
Phone: +55-11-2424-5353
Fax: +55-11-2424-5304

KYOCERA Document Solutions
Chile SpA
Andrés Bello 2299, Providencia Santiago,
Region Metropolitana, Chile
Phone: +56-2-2670-1900
Fax: +56-2-2350-7150

KYOCERA Document Solutions
Australia Pty. Ltd.
Level 3, 6-10 Talavera Road North Ryde NSW, 2113,
Australia
Phone: +61-2-9888-9999
Fax: +61-2-9888-9588

KYOCERA Document Solutions
New Zealand Ltd.
Ground Floor. 19 Byron Avenue, Takapuna, Auckland,
New Zealand
Phone: +64-9-415-4517
Fax: +64-9-415-4597

KYOCERA Document Solutions Asia Limited
13/F., Mita Centre, 552-566, Castle Peak Road, Tsuen
Wan, New Territories, Hong Kong
Phone: +852-2496-5678
Fax: +852-2610-2063

KYOCERA Document Solutions
(China) Corporation
8F, No. 288 Nanjing Road West, Huangpu District,
Shanghai, 200003,China
Phone: +86-21-5301-1777
Fax: +86-21-5302-8300

KYOCERA Document Solutions
(Thailand) Corp., Ltd.
335 Ratchadapisek Road, Wongsawang, Bangsue,
Bangkok 10800, Thailand
Phone: +66-2-586-0333
Fax: +66-2-586-0278

KYOCERA Document Solutions
Singapore Pte. Ltd.
7 Harrison Road, #06-01, Singapore 369650
Phone: +65-6741-8733
Fax: +65-6748-3788

KYOCERA Document Solutions
Hong Kong Limited
13/F., Mita Centre, 552-566, Castle Peak Road, Tsuen
Wan, New Territories, Hong Kong
Phone: +852-3582-4000
Fax: +852-3185-1399

KYOCERA Document Solutions
Taiwan Corporation
6F., No.37, Sec. 3, Minquan E. Rd., Zhongshan Dist.,
Taipei 104, Taiwan
Phone: +886-2-2507-6709
Fax: +886-2-2507-8432

KYOCERA Document Solutions
Korea Co., Ltd.
4F, DaBo Bldg, Mapo-daero 20, Mapo-gu, Seoul, Korea
Phone: ＋82-2-6933-4050
Fax: +82-2-747-0084

KYOCERA Document Solutions
India Private Limited
First Floor, Block - A, First India Place, Sushant Lok Phase
- 1, M. G. Road, Gurugram - 122002 (Haryana), India
Phone: +91-124-4671000
Fax: +91-124-4671001

KYOCERA Document Solutions
Malaysia Sdn. Bhd.
G/F & 2/F, No.71, Jalan SS15/5A, 47500 Subang Jaya,
Selangor Darul Ehsan, Malaysia
Phone: +603-5634 5609

KYOCERA Document Solutions Europe B.V.
Bloemlaan 4, 2132 NP Hoofddorp, The Netherlands
Phone: +31(0)20-654-0000
Fax: +31(0)20-653-1256

KYOCERA Document Solutions Nederland B.V.
Beechavenue 25, 1119 RA Schiphol-Rijk, The Netherlands
Phone: +31-20-5877200
Fax: +31-20-5877260

KYOCERA Document Solutions (U.K.) Limited
Eldon Court 75-77 London Road, Reading, Berkshire RG1 5BS, United Kingdom
Phone: +44-118-931-1500
Fax: +44-118-931-1108

KYOCERA Document Solutions Italia S.p.A.
Via Monfalcone 15, 20132, Milano, Italy
Phone: +39-02-921791
Fax: +39-02-92179-600

KYOCERA Document Solutions Belgium N.V.
Sint-Martinusweg 199-201 1930 Zaventem, Belgium
Phone: +32-2-7209270
Fax: +32-2-7208748

KYOCERA Document Solutions France S.A.S.
Espace Technologique de St Aubin Route de l'Orme 91195 Gif-sur-Yvette CEDEX, France
Phone: +33-1-69852600
Fax: +33-1-69853409

KYOCERA Document Solutions Espana, S.A.
Edificio Kyocera, Avda. de Manacor No.2, 28290 Las Matas (Madrid), Spain
Phone: +34-91-6318392
Fax: +34-91-6318219

KYOCERA Document Solutions Finland Oy
Atomitie 5C, 00370 Helsinki, Finland
Phone: +358-9-47805200
Fax: +358-9-47805212

KYOCERA Document Solutions Europe B.V. Amsterdam (NL) Zürich Branch
Hohlstrasse 614, 8048 Zürich, Switzerland
Phone: +41-44-9084949
Fax: +41-44-9084950

KYOCERA Bilgitas Document Solutions Turkey A.S.
Altunizade Mah. Prof. Fahrettin Kerim Gökay Cad. No:45 34662 ÜSKÜDAR İSTANBUL TURKEY
Phone: +90-216-339-0020
Fax: +90-216-339-0070

KYOCERA Document Solutions Deutschland GmbH
Otto-Hahn-Strasse 12, 40670 Meerbusch, Germany
Phone: +49-2159-9180
Fax: +49-2159-918100

KYOCERA Document Solutions Austria GmbH
Wienerbergstraße 11, Turm A, 18. OG, 1100 Wien, Austria
Phone: +43-1-863380
Fax: +43-1-86338-400

KYOCERA Document Solutions Nordic AB
Borgarfjordsgatan 11, 164 40 Kista, Sweden
Phone: +46-8-546-550-00
Fax: +46-8-546-550-10

KYOCERA Document Solutions Norge Nuf
Olaf Helsetsv. 6, 0619 Oslo, Norway
Phone: +47-22-62-73-00
Fax: +47-22-62-72-00

KYOCERA Document Solutions Danmark A/S
Ejby Industrivej 60, DK-2600 Glostrup, Denmark
Phone: +45-70223880
Fax: +45-45765850

KYOCERA Document Solutions Portugal Lda.
Rua do Centro Cultural, 41 (Alvalade) 1700-106 Lisboa, Portugal
Phone: +351-21-843-6780
Fax: +351-21-849-3312

KYOCERA Document Solutions South Africa (Pty) Ltd.
KYOCERA House, Hertford Office Park, 90 Bekker Road (Cnr. Allandale), Midrand, South Africa
Phone: +27-11-540-2600
Fax: +27-11-466-3050

KYOCERA Document Solutions Russia LLC
Building 2, 51/4, Schepkina St., 129110, Moscow, Russia
Phone: +7(495)741-0004
Fax: +7(495)741-0018

KYOCERA Document Solutions Middle East
Dubai Internet City, Bldg. 17,
Office 157 P.O. Box 500817, Dubai, United Arab Emirates
Phone: +971-4-4330412

KYOCERA Document Solutions Czech, s.r.o.
Harfa Office Park, Českomoravská 2420/15, Praha 9
Czech Republic
Phone: +420-222-562-246

KYOCERA Document Solutions Inc.
1-2-28 Tamatsukuri Chuo-ku Osaka 540-8585 Japan
Phone: +81-6-6764-3555
https://www.kyoceradocumentsolutions.com

KYOCERA is a trademark of KYOCERA Corporation